HIGHWAY RESEARCH CIRCULAR

Number 34 Subject Classification: Bridge Design
General Materials
Mechanics (Earth Mass) July 1966

Technical Paper Sponsored by

Committee on Culverts and Culvert Pipe
Department of Materials and Construction
Highway Research Board

AN ACCURATE DESIGN METHOD FOR BURIED FLEXIBLE CONDUIT STRUCTURES

by
Ronald Drawsky
Kaiser Aluminum & Chemical Sales, Inc.
Product Development

EXPLANATION

This paper was presented at the Meeting of Committee MC-D4 "Culverts and Culvert Pipe" on Tuesday, January 18, 1966.

The paper was reviewed by members of a review subcommittee and recommended for publication in a circular. The recommendation was accepted by the committee and the department.

Discussions of this paper are invited and pertinent discussions and author's closures may be published in this circular series.

ACKNOWLEDGMENTS

The author wishes to acknowledge the contribution of Water Resources Engineers of Lafayette, California, and in particular Dr. R.P. Shubinski and Mr. C.F. Scheffey for the formulation of the basic program logic and the resulting computer program.

TABLE OF CONTENTS

SUMMARY

The design method developed in this report evaluates the structural performance of buried flexible structures of any cross-sectional shape having a vertical axis of symmetry. It is appropriate to any structural material having a linear stress-strain relationship, such as aluminum, steel or concrete; peripheral variations of the moment of inertia of the wall cross-section can also be investigated. Variations of soil density, soil stress-strain relationships, active pressures, surface live loads and impact can be evaluated.

The non-linear mathematical solutions involved in the analysis have been programed on a 7094 computer for rapid solution. Because of the complex mathematics, manual solutions are not practical.

Verification of design concepts has been made by instrumented field tests conducted by Kaiser Aluminum's Product Development engineers and by several years of field evaluation of contractor-installed structures of all types, sizes and cover. Approximately one hundred structures have been monitored in this program, and all have confirmed the validity and inherent conservatism of the design method presented.

INTRODUCTION

The evolution of flexible metal structures in the past has been a trial and error procedure whose end result has been a structural product which has attained acceptance and satisfactory field performance. However, in this evolution the mathematical processes which could validate this performance were not rigidly defined.

Recently, second-generation culvert structures have been offered which have resorted to mathematical analysis to justify their acceptance. These analyses, however, have assumed certain conditions of behavior which are limited.

Two design methods which are presently being promoted and which are reported to be entirely satisfactory and conservative are noted below:

Design Method I

Problem: Define metal thickness required for a 180" diam. Multiplate under 20 ft. of cover.

Solution:

$$\text{Ring Thrust} = \underset{\text{(cover)}}{20 \text{ ft.}} \times \underset{\text{(density)}}{\frac{100 \text{ lb.}}{\text{ft.}^2}} \times \underset{\text{(1/2 span)}}{\frac{15 \text{ ft.}}{2}}$$

$$= 15{,}000 \text{ lb. per ft.}$$

$$\text{Design Thrust} = \overset{\text{(F.S.)}}{4} \times 15{,}000 = 60{,}000 \text{ lbs. per ft.}$$

Trial thickness is 0.135 (10 gage)

Check flexibility:

$$\text{If } \frac{(\text{diam.})^2}{\text{Mom. of Inertia}} \leq 6 \times 10^5 \text{ section is OK}$$

$$\frac{(180)^2}{.0781} = 4.15 \times 10^5 < 6 \times 10^5$$

Use 0.135" (10 gage)

Design Method II

Problem: Same as Method I.

Solution: Ring Thrust = 15,000 lb. per ft. (same)

$$f \text{ max.} = \frac{8\ EI}{D^2\ A}$$

Design Method II (Continued)

where

f = Allowable compressive stress
E = Elastic modulus, psi
I = Moment of inertia, in^4 per in.
D = Diameter, in.
A = Projected area of corrugation $in.^2$ per in.

$$f\ max = \frac{8 \times 30 \times 10^6 \times .1659}{180 \times 180 \times .3432} = 3{,}580\ psi$$

$$\therefore \text{Area required} = \frac{15{,}000/12}{3{,}580} = 0.350\ in.^2/in.$$

Use 0.343 (1 gage)

A fill-height table in common use would specify an 8 gage 5% elongated or a 3 gage round structure.

While it must be conceeded that any of the mentioned gages would be satisfactory if proper attention is given to backfill, it remains to be proven that Methods I or II apply to all culvert materials or to all types of flexible conduits.

Limitation of Deflection Limit Design Methods

The use of deflection as a design parameter has gained some acceptance in recent years. The basis for this parameter was defined by Professor M. G. Spangler (1) in which he defines the interrelationship of soil and structure in a flexible-conduit system.

The mathematical model which was developed to represent this relationship assumes certain conditions of behavior; it is axiomatic, however, that the equation can be no better than the assumptions used to define the equation. It is with this thought that the above work is reviewed to see if justification exists to remove the developed deflection equation out of text and to apply it indiscriminately as a design tool.

The major assumptions used to derive the deflection equation, and which are deserving of comment are as follows:

1. The behavior of a circular ring is insensitive to ring distortion.

2. Passive soil pressures are symmetrical about the horizontal axis of the structure and are parabolic in shape.

3. Active pressures do not exist in accompaniment with passive pressures.

4. The settlement of the invert into the soil is such as to cause the pressure distribution along the invert to be uniform.

The first assumption is one commonly applied to structural analysis and holds as its premise that structural deformations are of nominal magnitude and do not affect either the magnitude of the internal stresses or the final ring shape at equilibrium. In the case of buried conduits this assumption is neither valid nor conservative.

The second assumption is actually a combination of two assumptions. First, that the pipe deflects horizontally <u>into</u> the soil mass and vertically <u>away</u> from the soil mass. While vertical displacement is assumed by the inclusion of a rectangular distribution of footing reaction, the passive pressure at any point on the periphery is defined as being responsive only to <u>horizontal</u> displacements when in fact it should be responsive to a radial displacement.

The radial displacement concept would of course invalidate the parabolic distribution noted in the analysis.

The third item concerns active soil pressures. This type of pressure is initiated as soon as backfill begins and is of importance because it first distorts the pipe so that after fill is placed over the crown the pipe is no longer the same peripheral shape. In the case of circular pipe, therefore, the basic assumption of a circular shape in the mathematical analysis is invalid. Furthermore, these pressures continue to act on the structure, and should, therefore, be accounted for in any analysis.

The fourth assumption of uniform vertical soil pressure along the invert presupposes that a portion of the invert as defined by the bedding angle deforms into the soil without itself being deformed. The fact that horizontal pipe displacement is admitted in the second assumption would in itself disprove the validity of the assumption under discussion.

The point to be made from the above discussion is that to reduce the problem of culvert analyses to sliderule methods requires so many simplifying assumptions that any answers from these methods would be of doubtful value.

STRUCTURAL ANALYSIS OF BURIED FLEXIBLE STRUCTURES

The analysis of the structural behavior of buried flexible structures, to be useful in a design procedure, must, within limits of acceptable accuracy, simulate the true structural response of both soil and structure.

To accomplish this goal any acceptable analytical procedure must first consider four basic factors:

1. The effect of changes in shape of the original geometry upon the internal statics of the system and the external pressures.

2. The variation in the resistance of the soil in the fill material and the base strata.

3. The dual criteria of possible failure; that is, the failure due to excess stresses and the failure due to instability.

4. Lateral and longitudinal distribution of live-load-induced active soil pressures must reflect actual effects such as defined by Boussinesq.

Analytical Procedures

An analysis of a soil-conduit system can be approached by any one of three procedures:

1. Graphical
2. Numerical
3. Analytical

The number of solutions required and the accuracy required will dictate the choice. Because of the infinite variety of flexible structures only computer-oriented numerical solutions have been developed. (See Appendix A). However, spot checks of the computer solutions can be made by manual solutions using any of the above procedures. The development of these alternate solutions will not be a part of this paper.

While the mathematical procedures vary, the same basic approach is common to all.

First, define a structure which is thought to be adequate.

Second, define all vertical and active pressures that act on the structure.

Third, assume the magnitude of the passive pressures which act on the structure.

Fourth, analyze the structure for its resulting internal stesses and soil displacements.

Fifth, using soil displacements just defined redefine passive pressures and again define internal stresses and soil displacements.

Sixth, repeat five until solution converges within required accuracy.

Note, the solution may not converge so appropriate checks should be made. For accuracies used in the computer solutions as many as thirty cycles can be required.

Development of Computer-Oriented Analytical Procedures

The flexible structure achieves a state of equilibrium with external forces not chiefly by the development of internal resisting moments, but by a combination of such moments with a readjustment of its geometry to alter the external forces and to bring its elastic axis closer to the equilibrium polygon.

Any analysis of such systems must, therefore, take into account the effect of these readjustments of geometry upon the equations which establish the relationship of external load to internal moments. In terms of structural theory, this means that the problem must be treated as a problem of non-linear analysis, with the two important consequences that the superposition principle does not hold in its usual sense, and that response is no longer directly proportional to load. Closed direct solutions of such non-linear problems exist only for a few relatively simple structural systems such as beam columns. For more complex cases, such as this flexible culvert analysis, recourse must be made to numerical approximations and iterative procedures.

The principle loads which come upon the culvert are those due to the dead weight of the soil upon the culvert conduit. Variations in the unit weight of this soil, its moisture content, and the degree of arching action influence the active load which comes upon the top of the culvert. Previous investigations of the dead load due to this weight acting upon flexible culverts have all shown that some reduction below the total weight of the prism of material above the conduit may be expected. In some cases, however, this reduction appears to be rather a temporary condition, and as a conservative practice it was decided that provision should be made in the program to compute the active loads due to the weight of the fill material as though the entire prism were being carried by the conduit. As the program developed, it was found possible to provide for making arbitrary percentage reductions in this active load when desired.

The horizontal pressures which are produced by the weight of the fill material are even more difficult to evaluate in any exact degree. Since the best estimates of this lateral pressure seem to be those upon a hydrostatic coefficient applied to the vertical pressure, it was decided to base the computer program upon this assumption.

The effects of superimposed loads upon the pressures acting on the culvert depend upon the state of stress which is set up in the fill material by the passage of these live-load elements. In spite of the shortcomings of the assumption that these loads are transmitted through the fill material, as they would be in an elastic media, it has been customary to compute the pressures acting upon the culvert on the basis of the Boussinesq equation. This equation gives an exact solution for the vertical pressure on a plane at any depth below a concentrated load on the surface of an elastic half-space, and at any position horizontally with respect to the vertical line through the load. For this analysis it is assumed that the actual live-load vehicles are represented by several concentrated point loads upon the surface of the fill material. The program provides for four different options as to the type of live-load. The first of these is the standard AASHO H20-S16 highway vehicle. This loading is defined in the specifications of the American Associations of State Highway Officials.

The other three options as to type of live-load for which the section may be analyzed consist of the Cooper E72 Railway Loading, a 120 kip construction axle, and no load at all. For the Cooper E72 Railway Loading, the tract pressures produced by the heavy drive axles of the locomotive are represented by areas 24 x 96 inches in plan. For this type of loading, no point can be critical except that on a plane passing through the center of the load system, and this is the point which therefore was investigated. The live-load pressures due to the 120 kip construction axle were investigated in identical fashion to the single-axle loading for the H20-S16 highway loads.

In all analysis of live-load pressures, it was assumed that the loading was placed so as to bring a symmetrical load upon the culvert. If one conceives of the behavior of such a flexible culvert as being akin to that of a long-span flexible arch, there is perhaps some question as to the validity of assuming that this symmetrical load case is the critical one. This question was therefore investigated at some length before programming was begun on this assumption. It was concluded that the conception of such a culvert as a free-standing unbraced flexible arch is an improper one, and that the unsymmetrical buckling modes normally associated with such long-span arches are not possible within the system due to the development of passive pressures along these portions of the arch which would tend to deflect outward in a radial direction. It was therefore decided that the restriction of live-load conditions to those producing symmetrical sets of pressure in the culvert was adequate basis for analysis.

Perhaps the most difficult part of the flexible structure idealization is to provide properly for the passive pressures developed in the soil adjacent to the sides of the culvert pipe. In this investigation these passive pressures were represented by a series of non-linear elastic springs along the sides and bottom of the culvert pipe system. The characteristics of these springs may be anything which further studies of such systems indicate to be the most realistic form of load-deflection diagram for the soil passive pressures. The program as presently written provides for using any load-deflection curve which can be defined by two parameters; that is, any curve which is defined by a second-order equation, and which passes through the origin. Provision has also been made for specifying the characteristics of these springs individually.

A modification in the original idealization which was used in setting up the program was made after some of the initial test cases had been run. It was determined that the Y-direction deflections were in general quite large with respect to the X-direction deflections in the culvert system. This led to the development of large negative radial displacements on the springs acted upon by vertical active pressures, implying that either these springs must be placed in tension or they would go completely out of action. A reconsideration of the behavior of the fill adjacent to the structure led to the provision for removing the influence of the Y-component deflections on the springs in this portion of the passive-pressure system. The program as finally written provides for specifying the number of springs which may be assumed to respond only to X-direction deflection components. It is believed that this feature of the program permits an adequate representation of the true nature of the development of passive pressures in this region since the compression of the adjoining fill material is recognized.

The diagrametic presentation of the idealizations are shown in Figure 1. In each case, due to the symmetry of the structure and the assumed symmetry of the load system, only the right half of the culvert has been analyzed. The culvert itself has been represented by a series of straight line segments which connect points lying on the actual geometrical configuration of the culvert section under consideration. The passive pressures produced by the soil at the sides and the bottom of the culvert are represented by the non-linear elastic springs described in the previous section. The statically indeterminate analysis involved in the solution of each of the sections select these springs representing the passive soil pressure and the internal moments at the top and bottom of the culvert ring as the redundants. In each case, however, one or more of the passive-pressure springs must be retained in the statically determinate base structure in order to give a stable structure for the application of external loads.

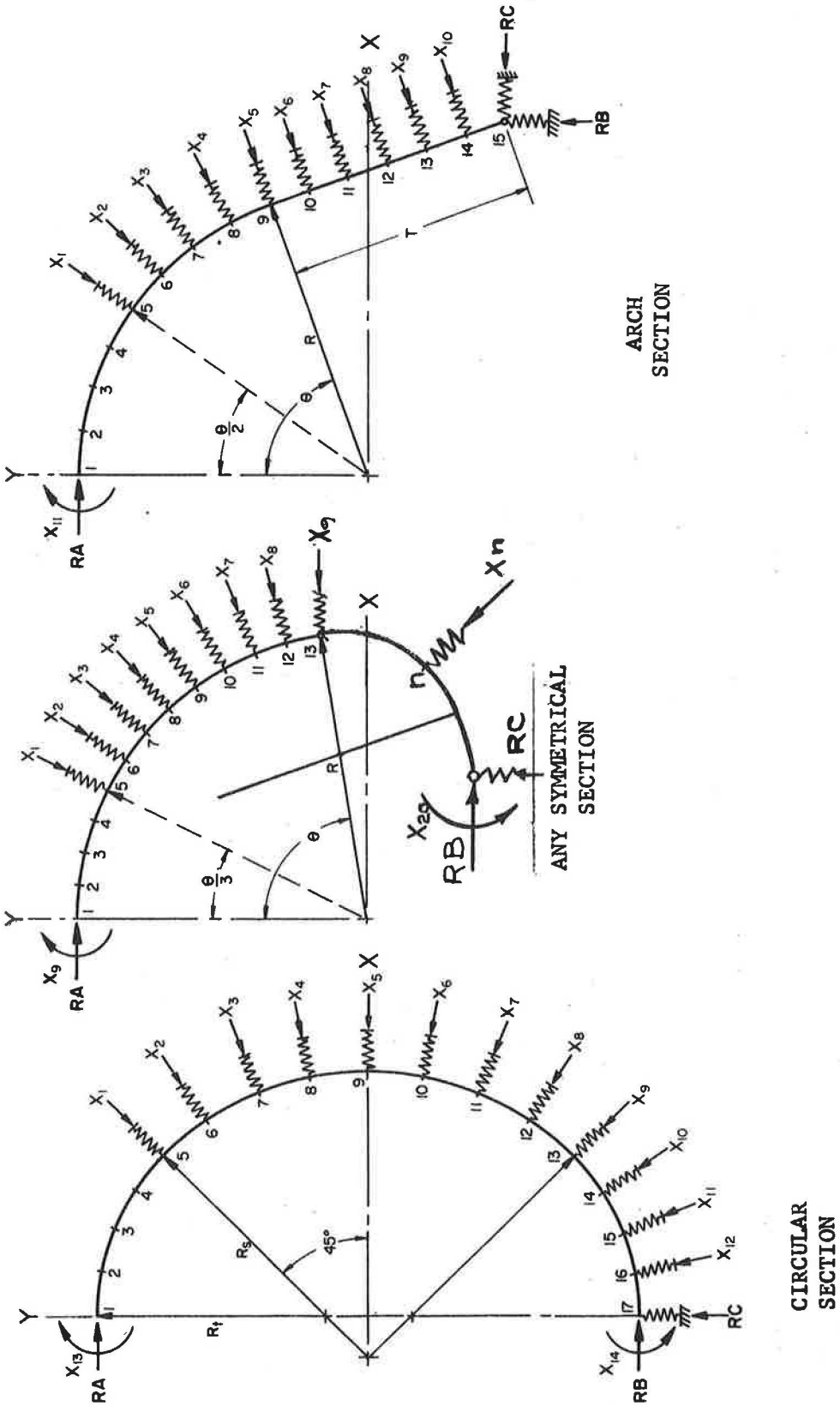

FIGURE - 1
DIAGRAMETRIC REPRESENTATIONS OF IDEALIZED SECTIONS

The thrust at the top and the bottom, and pressure in the last of the passive pressure springs become the reactions to the statically determinate base structure. This base spring, in the case of the circular culvert, is a "half-spring" due to the fact that a cut has been made here along a line of symmetry.

Confirmation of Analytical Procedures

To validate the analytical procedures developed in the computer program, an instrumented field test was initiated (3) with 78 inch 5% elongated pipe and a 55 square foot arch supported by a corrugated metal footing. Both structures were field erected from curved corrugated sheets of 5052 aluminum alloy having a 9 inch pitch and a 2 1/2 inch deep corrugation pattern.

The instrumentation consisted of ring-flexure and thrust measurements and horizontal and vertical displacement gages at selected points on each structure type. Soil measurements of density, compaction and stress-strain relationships were also taken. The stress-strain data was in the form of Modpares curves as derived from soil samples submitted to Professor R. K. Watkins [2] for analysis.

The two structures were tested under minimum fills of 2.2 and 4.4 ft. with H20 live-loading and under fills to thirty feet above the crown. This test of flexible culvert in a soil medium of known structural response confirmed the mathematical concepts used in the computer program.

Photographs on the following two pages illustrate this test.

10 x 6 arch and 5% 78 in. diameter pipe assembled and ready for backfill.

Compacting fill adjacent to arch.

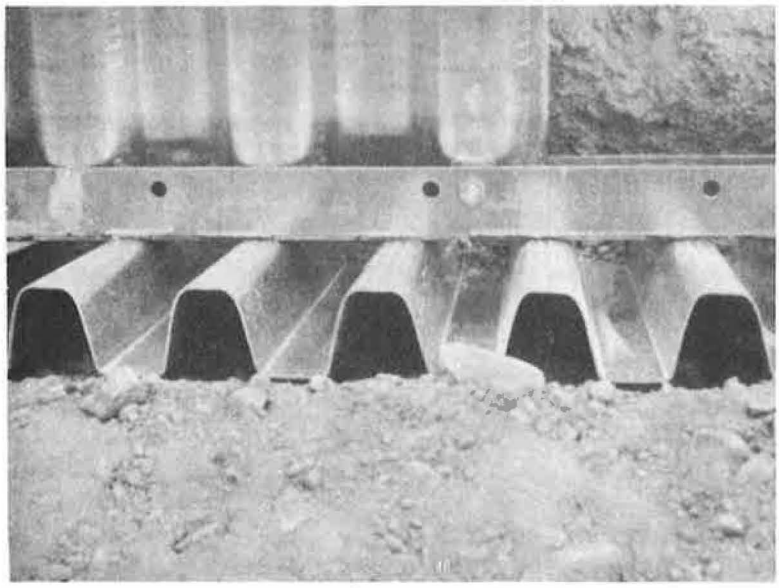

Corrugated footing of arch

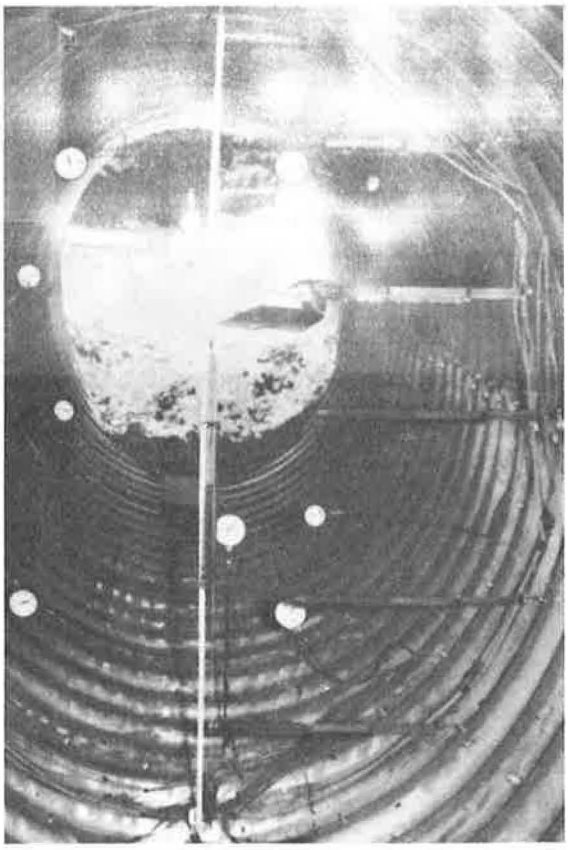

mounted in 78 in. diameter pipe.

D-8 cat set up on rectangular plates to simulate an H20 truck. 2.2 ft. of cover. Structure to left is a 5% 78 in. diameter pipe. Structure to right is a 10 x 6 arch.

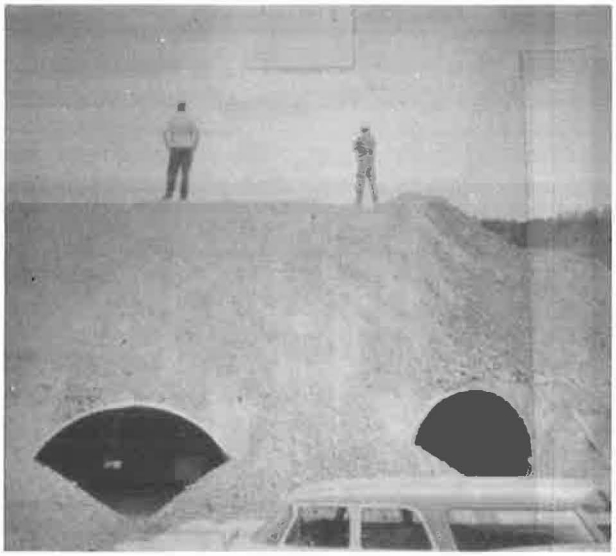

Left, both structures with 10 ft. of cover.
Right, thirty ft. of cover. Access to pipes on far side of hill.

DESIGN METHOD AS APPLIED TO KAISER ALUMINUM STRUCTURAL PLATE

The basic premise underlying the design of Kaiser Aluminum Structural Plate is that the structural system shall be an elastic system, not in the plastic range of its stress-strain curve, and that all structural components shall adequately resist all internal forces of moment and thrust using standard interaction diagrams. To achieve structural adequacy the bolted joint shall be designed to fail at loads in excess of design conditions - this to be achieved by either a reduction in ultimate joint capacities or an increase in fill above the design height.

The prediction of thrust and moment requires that the selected parameters represent conservative design practices consistent with the state of knowledge of that parameter and with the economic consideration of the structural system. A discussion of each parameter and the reasons for its selection is outlined in the continuing text.

Vertical Dead-Load Active Pressure

A soil density of 120 pcf is recommended. This is higher than the density normally assumed for this type of analysis, but it is felt that the higher density is a truer representation of most soils than the 100 pcf normally specified.

Horizontal Dead-Load Active Pressure

Horizontal active pressures for purposes of design are divided into two conditions. The first condition is the backfilling phase to the top of the structure, the second is from zero cover to final fill.

The proper choice of a hydrostatic active pressure coefficient for fills to the crown was based on field observation of structure deformation during backfill. These observations of many field installations have indicated a coefficient of 0.35 to be proper.

For condition two, where the top of fill is above the crown, the active pressure is mobilized to a greater degree and would be expected to have a value somewhere between the limits of 0.30 and 0.55. For use in the design method being proposed, a value $K_{H<0} = 0.45$ is suggested.

Modulus of Passive Pressure

The modulus of passive pressure, which Watkins and Spangler have defined as E', reflects the "stress-strain"relationship of a soil medium when compressed by a flexible conduit.

Watkins, in a report [2] sponsored by ASCE, has defined E' for a cohesive clay and sand at 80, 90 and 100% compaction at an overburden pressure of 20 psi, approximately equivalent to a cover of about 24 feet. This data is shown in curve form in Figure III. The report does not discuss in detail the effect of increased overburden and its resultant increased vertical pressure except to state that E' will increase as the overburden also increases. Figure 17 of Watkins' report shows significant increases in E' as the overburden increases.

Based on these observations and a commonly used minimum E' of 700, a range of E' values has been selected for design purposes.

E'	Fill ht. above crown, ft. H
700	0-60
1100	61-90
1700	91-120
2000	121-150

The extremes of the range have been plotted on Figure III. If one accepts 2% as an upper limit of deflection for a flexible structure, the conservatism of the above table becomes readily apparent.

Stability

The stability of a conduit can be mathematically shown to be predictable by observing the crown deflection after each of four successive iterations. In equation form the factor of safety may be expressed as follows:

$$FS = \frac{d_n - d_{n-1}}{d_{n+1} - d_n}$$

where

d_n = crown deflection after a given iteration n

Because of the non-linear aspects of the mathematical procedures involved in the analysis, the resulting factor of safety will only be qualitative. The true factor of safety would be expected to be of greater magnitude.

With this in mind a minimum factor of safety of 3.0 was chosen.

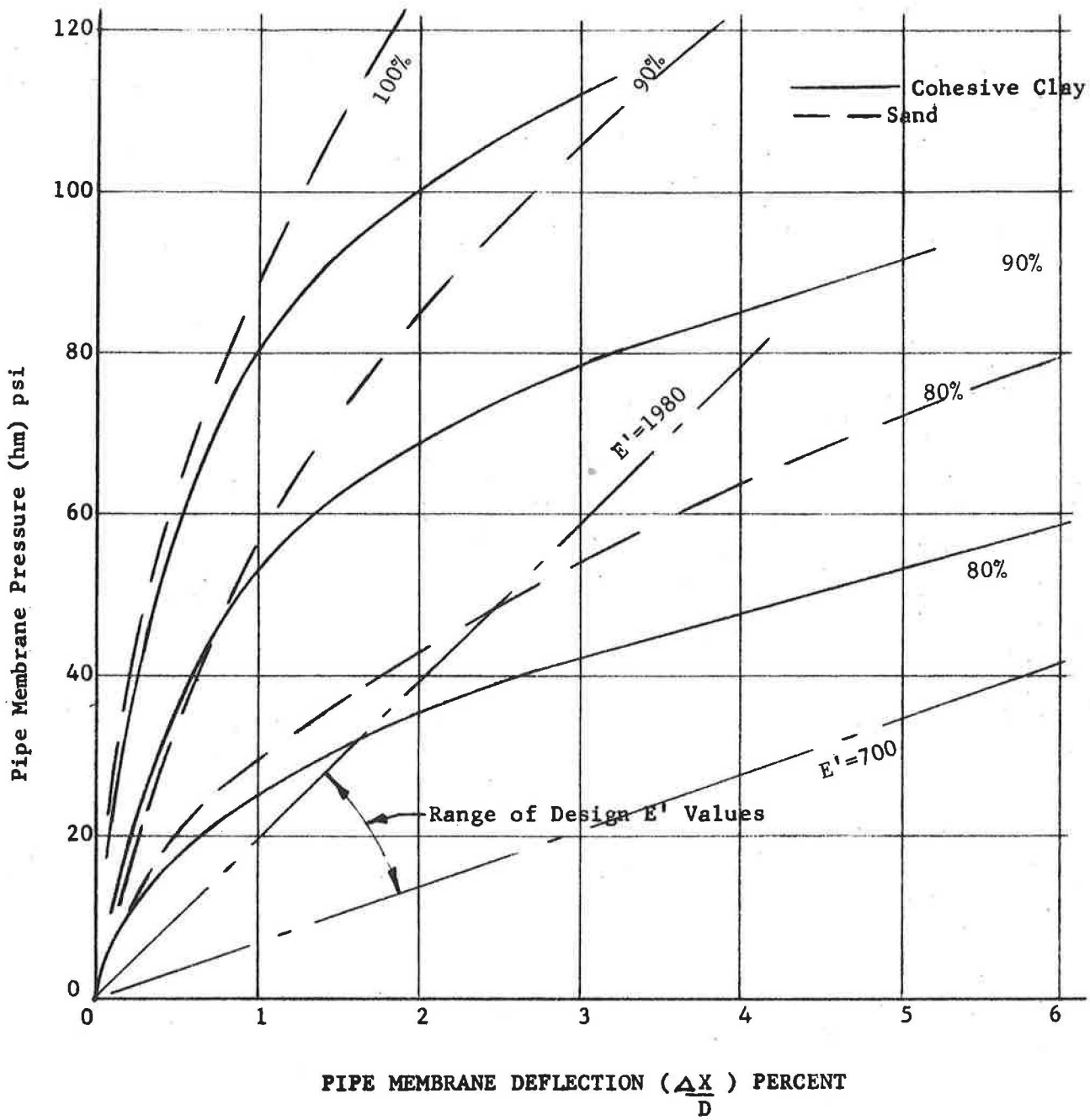

TYPICAL MODPARES PLOT OF PASSIVE PRESSURE, hm (psi) VERSUS DISPLACEMENT $\frac{\Delta X}{D}$ (%)

Data from Table 2 of report by Dr. Watkins[2] with factor of safety as noted in table removed.

FIGURE III

Joint Strengths

The joint tests tabulated below are the result of laboratory compression and flexure tests [4] of corrugated specimens and are appropriate in the design of Kaiser Aluminum structural plate pipe, pipe-arch and arch.

These test values have been reduced to account for variations from nominal gage. In addition, the strengths were reduced to account for the lower strengths expected had the ultimate tensile strength of all specimens been at the minimum allowed of 35.5 ksi.

Gage	Fastener Alloy	Ultimate Thrust Capacity, k/ft.	Ultimate Moment Capacity, k-in./ft.
	3/4 diam.	5 1/3 bolts per ft. of seam	
.090	6061-T6	22.4	27.3
.100	6061-T6	25.8	31.0
.125	6061-T6	35.3	42.4
.150	6061-T6	43.1	52.0
.175	6061-T6	51.1	62.5
.200	Steel	59.0	70.5
.225	Steel	66.3	78.0
.250	Steel	73.7	85.2

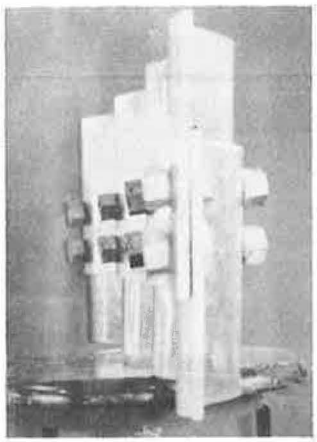

Compression test of .250 gage aluminum structural plate. Bolt rotation caused by bearing failure of sheet.

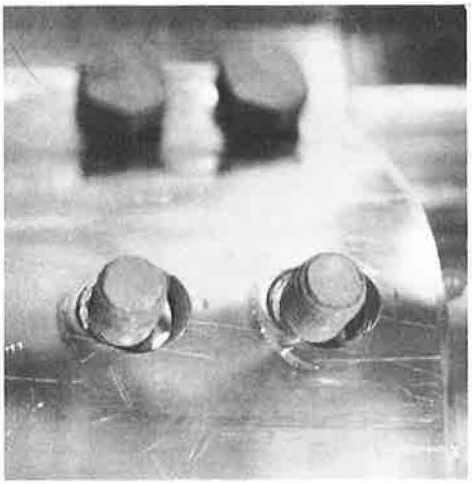

Bearing failure, compression test.

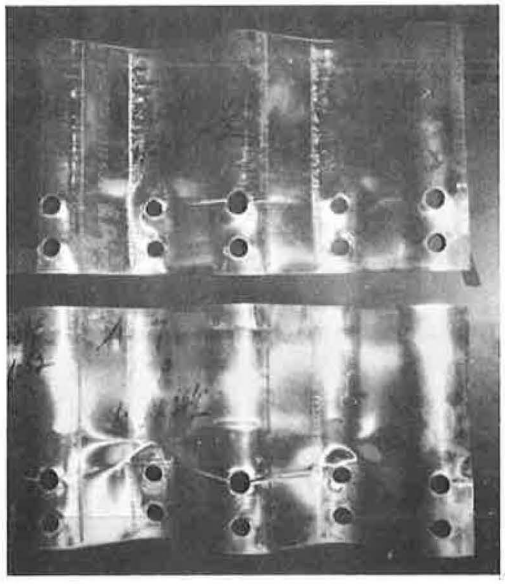

Tensile failure thru bolt holes on tension side of flexure specimen.

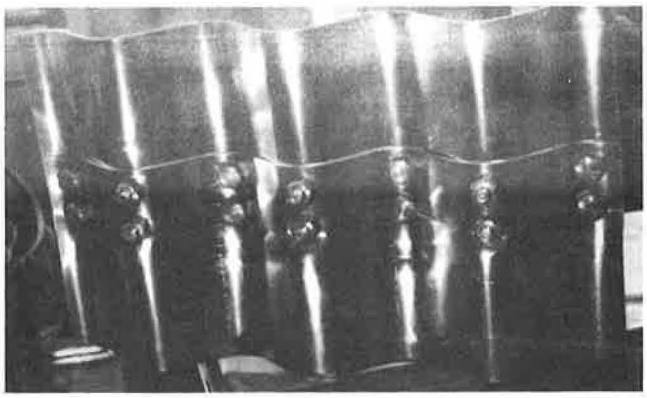

Assembled view of upper flexural speciman.

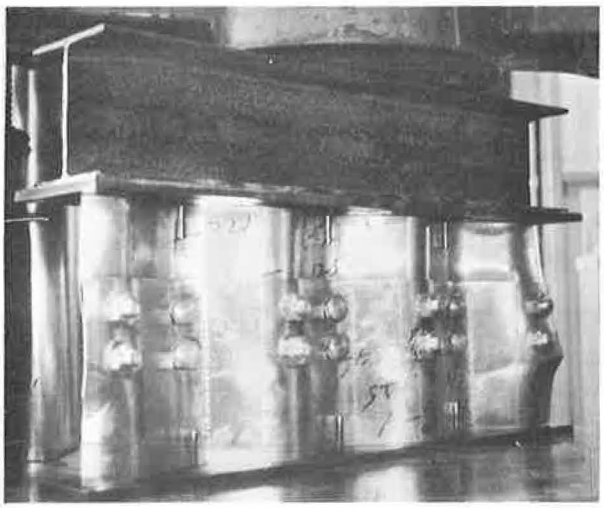

Compression failure of .125 gage specimen.

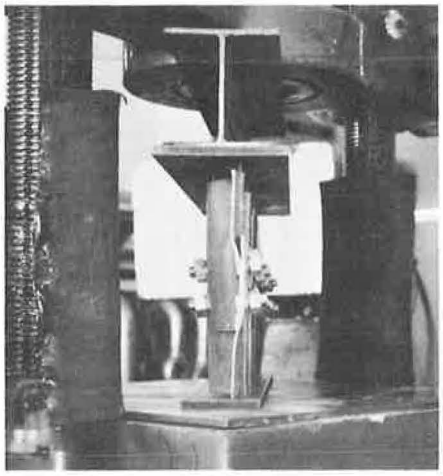

Bolt rotation caused by bearing failure, compression test.

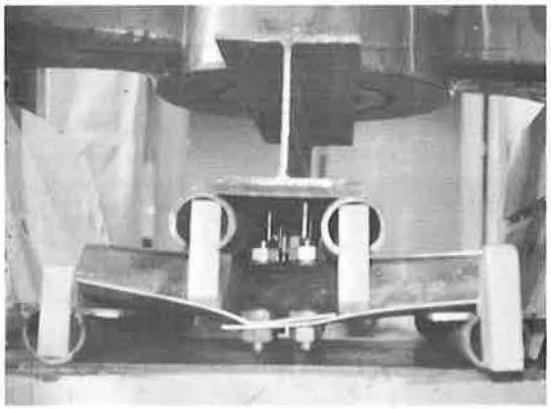

Speciman loaded in flexure.

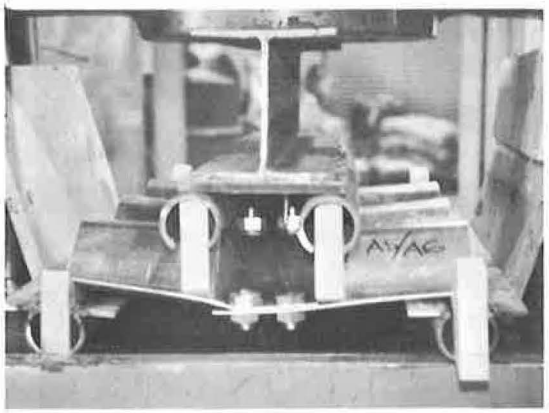

Deflection of sheet after flexural failure.

Interaction Diagram

In application these ultimate capacities are integrated into an interaction diagram of the following type:

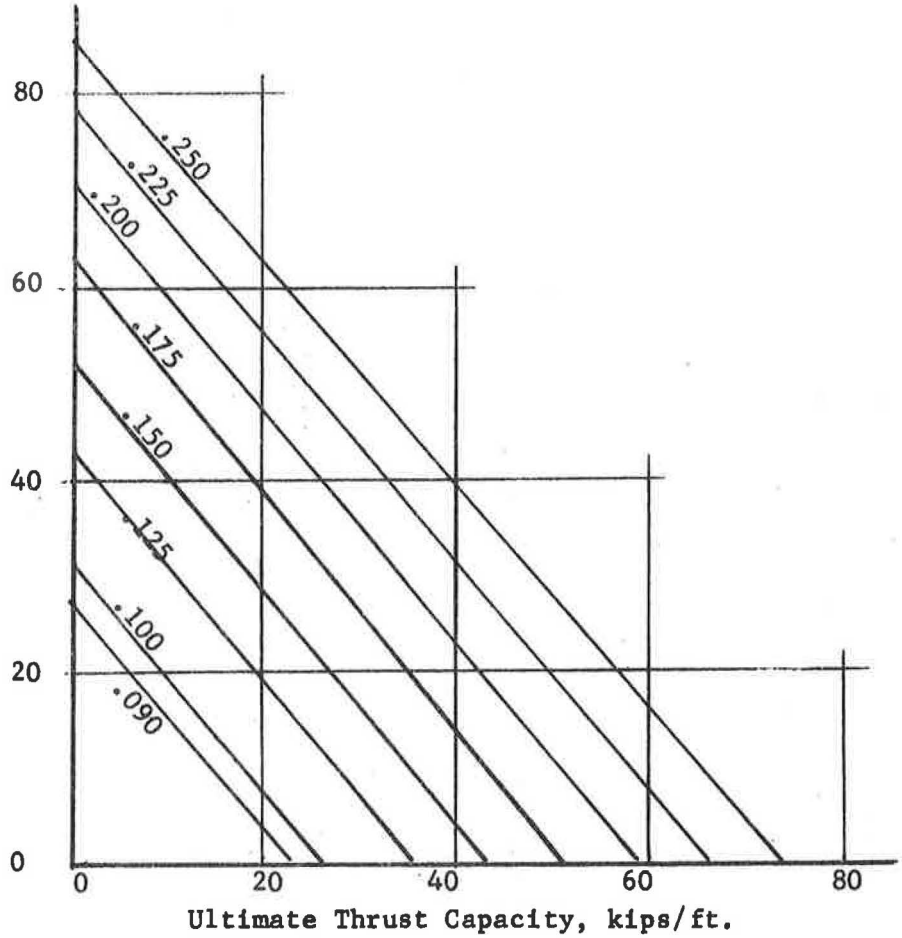

INTERACTION DIAGRAM

Since the mode of failure of each loading condition is different and each is non-additive, the curves would actually be expected to bow outward. However, to be consistent with the usual interaction diagrams, this facet was not evaluated by test and, therefore, not incorporated.

Factor of Safety

Before one discusses quantitatively a factor of safety, a statement of what is intended by its use is in order. A factor of safety can be said to be an insurance that the buried flexible structure will perform satisfactorily over its service life without suffering a failure due to either its expected loads or nominal overloadings due to live-loads or later grade realignments.

An actual factor of safety for a structure of this type cannot readily be defined if one is to accept the formal definition of the term. Mathematically the F.S. can be stated to be the ratio of the failure load to the design load. However, it should be borne in mind that while the definition is rather precise, it loses its exactness in actual structural design. For it to be exact, the structures would have to have the minimum properties as defined in the design and meet other design criteria to be discussed later. The probability of a given structure meeting these requirements is quite remote. In practice, therefore, the actual factor of safety is probably two or more times the stated factor of safety.

Loading Condition*	Structure Type	Factor of Safety
Backfill	All	(Ultimate joint strength)/1.33
DL+LL(Min.Fill)	All	(Ultimate joint strength)/1.50
DL+LL	Pipe Arch & Arch	(Ultimate joint strength)/1.50
DL+LL($H \leq 15$)	Elongated Pipe	(Fill Height) 2.00
DL+LL($H \geq 16$)	Elongated pipe	(Fill Height) 1.50

* At the design fill height the minimum factor of safety against instability shall be 3.0.

It therefore would follow that the above factors of safety are minimum values which most or all structures would be expected to exceed.

Critical Section

For purposes of design, a bolted joint should be assumed to exist at the point of critical stress. (This assumption is usually only true in a pipe or pipe-arch of a three-plate makeup.) Where backfill moments are additive to dead-and-live-load moments, the two stress conditions should be combined for design purposes. Where the two conditions are not additive, the section should be designed for each separate condition and the condition requiring the larger gage should control.

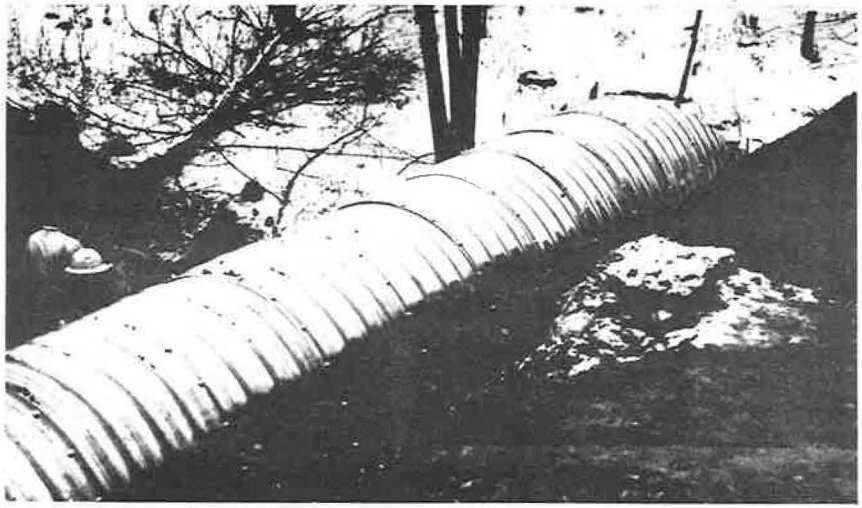

5% - 78 in. diam. pipe. Two plate ring of .090 gage aluminum structural plate.

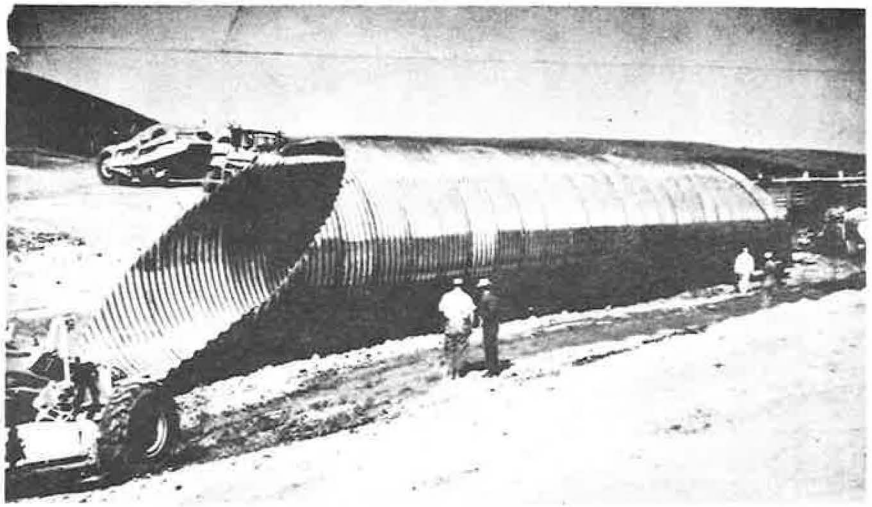

10% - 168. diam. pipe. Four plate ring of .175 and .150 gage.

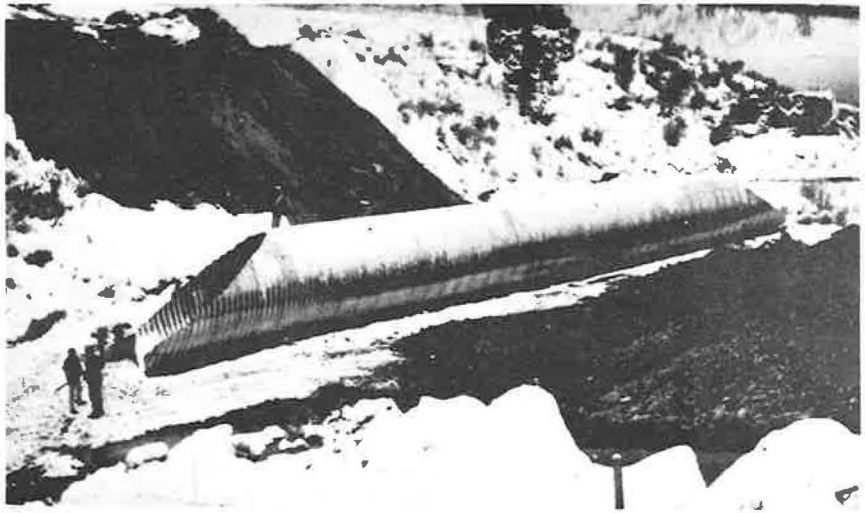

10% - 120 in. diam. pipe. Four plate ring of .125 gage.

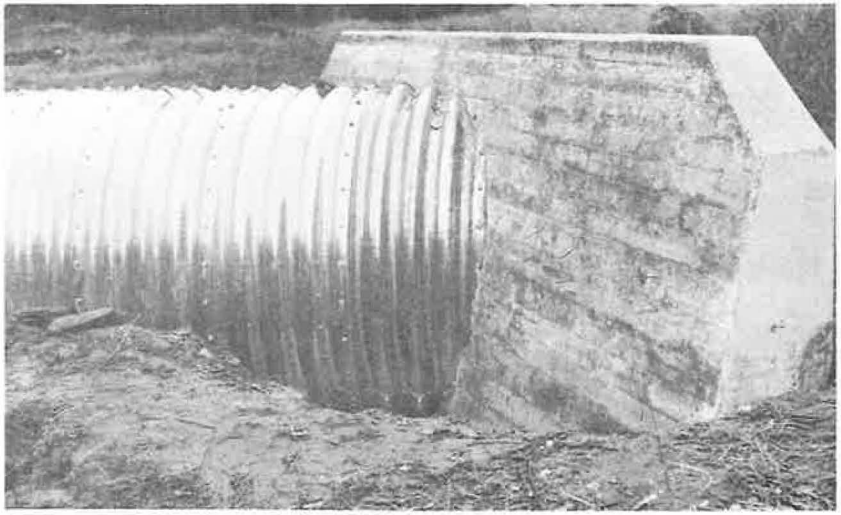

5% - 96 in. diam. pipe. Three plate ring of .090 gage.

Largest aluminum pipe arch, 16-8 x 9-11, being assembled near Milford, Illinois.
Upper photo, plate assembly.
Lower photo, final torquing.

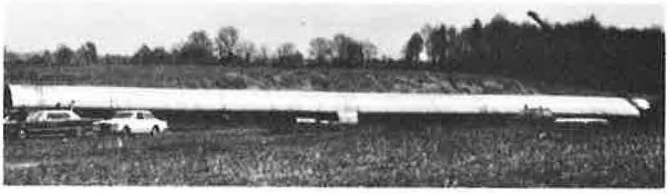

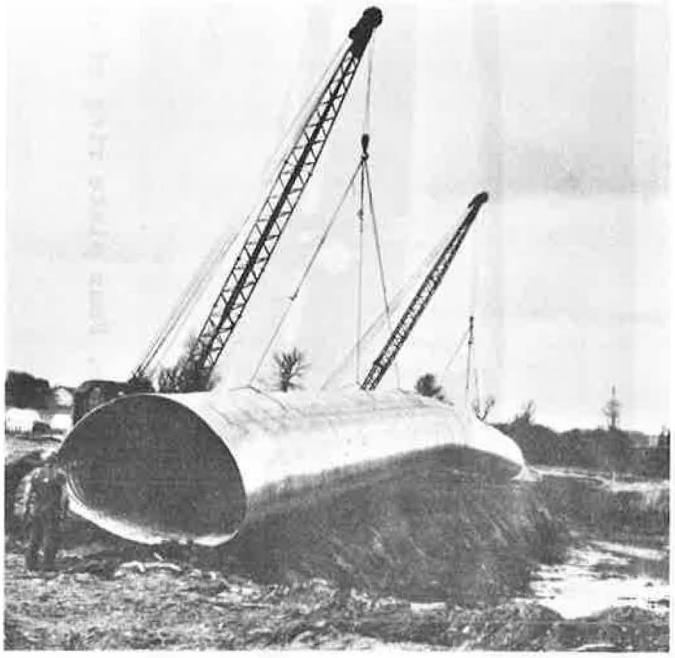

"THE BIG NOODLE" as it was called by workmen at Plymouth, Ind., is a 200-foot-long aluminum pipe that was hoisted into place in a single piece by two 3/4-yard cranes. The 15,300-pound pipe was assembled on the bank of the trench from sections of Kaiser Aluminum structural plate.

This 12-5 x 8-2 pipe arch was plant-assembled from aluminum structural plate, then trucked to job site.

Twin 9-9 x 6-11 pipe arch factory-assembled being installed in Lawrence County, Indiana.

DESIGN EXAMPLES

DESIGN EXAMPLE NO. 1

Circular Pipe, High Fill

Problem

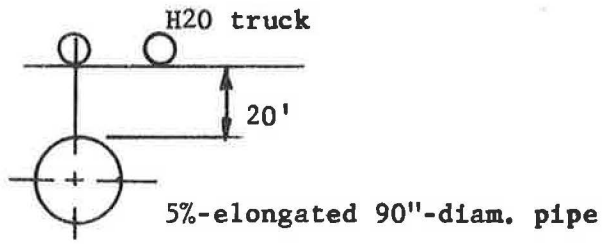

Select proper gage using Kaiser Aluminum structural plate. For sheet and corrugation details see Appendix C.

Gage Selection, Backfill

Computer Input

Nominal Pipe Radius	45.93"
% Elongation	5%
Soil Density	120 pcf
Active Soil Pressure Coef.	0.35
Modulus of Passive Resistance	700 psi
Moment of Inertia of Trial Section (.100 gage)	0.091 in.^{4}/in.
Area of Trial Section	0.117 in.^{2}/in.

Computer Output

Max. Thrust (@ crown)	0.4k/ft.
Max. Moment (@ crown)	4.3k-in./ft.
F.S. (Stability)	73.14

Gage Selection (F.S.)

Design Thrust = 1.33 x 0.4 = .53k/ft.

Design Moment = 1.33 x 4.3 = 5.7k-in./ft.

Using interaction diagram select .090 gage, Gage required - backfill.

Gage Selection, Final Cover plus H20 Loading

Computer Input

Nominal Pipe Radius	45.93"
% Elongation	5%
Soil Density	120 pcf
Active Soil Pressure Coef.	0.45
Modulus of Passive Resistance	700 psi
Moment of Inertia of Trial Section (.100 gage)	0.091 in.^{4}/in.
Area of Trial Section	0.117 in.^{2}/in.
Live-Load	H20
(F.S.) (Actual cover)	
Height of Cover 1.5 x 20	30 ft.

Computer Output

Max. Thrust (@ crown) = 10.0 k/ft.
Max. Moment (@ crown) = 16.5 k-in./ft.
F.S. (Stability) = 6.55

Gage Selection

Design Thrust = 10.0k/ft.
Design Moment = 16.5k-in./ft.
Using interaction diagram select 0.100 gage. Gage required - final cover.

Use 0.100 gage. Final cover controls.

DESIGN EXAMPLE NO. 2

Circular Pipe, Minimum Fill

Problem

Same as No. 1 except cover reduced to 1 foot.

Gage, Selection, Backfill

Same as No. 1.

Gage Selection, Final Cover plus H20 Loading

Computer Input

Same as No. 1 except height of cover is 1 foot.

Computer Output

Max. Thrust (@ crown) = 2.4k/ft.
Max. Moment (@ crown) = 16.4k-in./ft.
F.S. (Stability) = 23.37

Gage Selection (F.S.)

Design Thrust = 1.50 x 2.4 = 3.6k/ft.
Design Moment = 1.50 x 16.4 = 24.6k-in./ft.
Using interaction diagram select .090 gage. Gage required - final cover.

Use 0.090 gage. Final cover and backfill control.

DESIGN EXAMPLE NO. 3

Pipe Arch, Any Fill

Problem

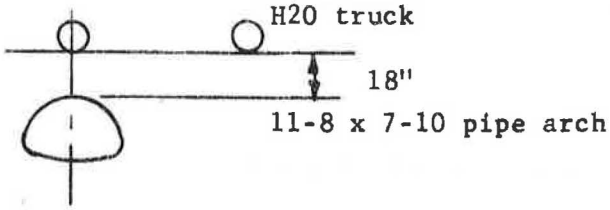

Select proper gage using Kaiser Aluminum Structural Plate. For sheet and corrugation details see Appendix C.

Gage Selection, Backfill

Computer Input

X-Y coordinates of 18 points about periphery.

Soil Density	120 pcf
Active Soil Pressure Coef.	0.35
Modulus of Passive Resistance	700 psi
Moment of Inertia of Trial Section (.150 gage)	0.136 in.^{4}/in.
Area of Trial Section	0.175 in.^{2}/in.

Computer Output

Max. Thrust (@ crown) = .36 kips/ft.
(@ invert) = 1.08 kips/ft.
Max. Moment (@ crown) = 2.6k-in./ft.
(@ invert) = .3k-in./ft.
F.S. (Stability) = 73.66

Gage Selection

Design Thrust = 1.33 x .36 = .48k/ft.
= 1.33 x 1.08 = 1.45k/ft.
Design Moment = 1.33 x 2.6 = 3.5k-in/ft.
1.33 x .3 = 0.4k-in./ft.
Using interaction diagram, .090 adequate. Gage Required - backfill.

Gage Selection, Final Cover plus H20 Loading

Computer Input

X-Y Coordinates

Soil Density	120 pcf
Active Soil Pressure Coef.	.45
Modulus of Passive Resistance	700 psi
Moment of Inertia of Trial Section (.150 gage)	0.136 in.^{4}/in.
Area of Trial Section	0.175 in.^{2}/in.
Live-Load	H20
Height of Cover	1.5 ft.

Computer Output

Maximum Thrust (@ crown) = 2.1k/ft.
Maximum Moment (@ crown) = 33.3k-in./ft.
F.S. (Stability) = 21.40

Gage Selection (F.S.)

Design Thrust = 1.50 x 2.1 = 3.2k/ft.
Design Moment = 1.50 x 33.3= 50k-in./ft.
Using interaction diagram select 0.175 gage. Gage required - final cover.

Use 0.175 gage.Final cover controls.

DESIGN EXAMPLE NO. 4

Arch, Any Fill

Problem

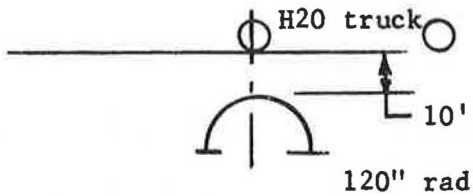

120" rad. arch. 180° included angle.

Select proper gage using Kaiser Aluminum Structural Plate. For sheet and corrugation details see Appendix C.

Gage Selection, Backfill

Computer Input

N. A. Radius	120"
Included angle	180°
Soil Density	120 pcf
Active Soil Pressure Coef.	0.35
Modulus of Passive Resistance	700 psi
Moment of Inertia of Trial Section (.175 gage)	0.159 in.^{4}/in.
Area of Trial Section	0.204 in.^{2}/in.

Computer Output

Maximum Thrust (@ crown) = 1.7k/ft.
Maximum Moment (@ crown) = 16.7k-in./ft.
F.S. (Stability) = 6.21

Gage Selection (F.S.)

Design Thrust = 1.33 x 1.7 = 2.3 k/ft.
Design Moment = 1.33 x 16.7 - 22.2 k-in/ft.
Using interaction diagram, .100 adequate (before using, recheck backfill using .100 gage, low F.S. stability).

Gage Selection, Final Cover plus H20 Loading

Computer Input

Same as previous except:

Active Soil Pressure Coef.	0.45
Live-Load	H20
Height of Cover	10 ft.

Computer Output

Maximum Thrust (@ crown)	12k/ft.
Maximum Moment (@ crown)	15.5k-in./ft.
F.S. (Stability)	3.06

<u>Gage Selection</u> (F.S.)

Design Thrust = 1.50 x 12.0 = 18 k/ft.

Design Moment = 1.50 x 15.5 = 23.2/k-in./ft.

Using interaction diagram, .125 adequate. However, since F.S. of stability = 3.05 for .175 gage, use .175 gage.

Use <u>0.175 gage. Final cover controls</u>
Stability critical

BIBLIOGRAPHY

(1) Spangler, M. G., Soil Engineers, International Textbook Company, 1960.

(2) Watkins, R.K., Development and Use of the Modpares Device in Predicting the Deflection of Flexible Conduits Embedded in Soil, Utah State Engineering Experiment Station, 1962.

(3) Kaiser Aluminum & Chemical Sales, Inc., Aluminum Structural Plate, Fill Height Test on Circular and Arch Pipe, 1963.

(4) Kaiser Aluminum & Chemical Sales, Inc., Aluminum Structural Plate, Joint Tests, 1964.

APPENDIX A

GENERAL DESCRIPTION OF THE COMPUTER PROGRAM

This report will not present a complete discussion of all the details of the computer program as it has been developed for this analysis problem. Copies of the program statements, which were written in Fortran language, and the resulting symbolic machine language program, are on file. It is desired, however, to give a brief description of the general logic of the computer program and the manner in which it was organized so that the user may appreciate the general function of the various sub-routines in the program and the capabilities which the program possesses for modifications to meet future needs.

The function of any large computer program can most concisely be described in terms of its flow chart. The flow chart for this program is given in Figure 2. In this figure, not all of the details, arithmetic and algebraic steps involved in the program are shown, but only the major blocks or sub-programs. The program begins with a stipulation that the internal clock of the computer be printed to permit accurate timing of every run which is made. Subsequent to this, the READ DATA sub-program is called, which reads the important data for the particular job and case to be examined. The details with regard to how this data is prepared and what parameters are read at this point will be discussed later in this report.

Following the READ DATA sub-routine the clock is again called. This call for the clock, however, is conditional and will be bypassed during production runs, as will all other clock calls except the one which is printed after the analysis of each particular section and loading condition is complete. The program next enters a step which selects the appropriate sub-routines depending upon the type of section being analyzed. If the section is "circular", control will pass to sub-routine CIRSEC, which takes the nominal radius, percent elongation, and other input parameters for defining the circular section and computes the complete geometry for this particular section. This complete geometry consists of those items of information desired from a use standpoint on the culvert such as its net hydraulic area and its perimeter, and also those items of the geometry which are used in

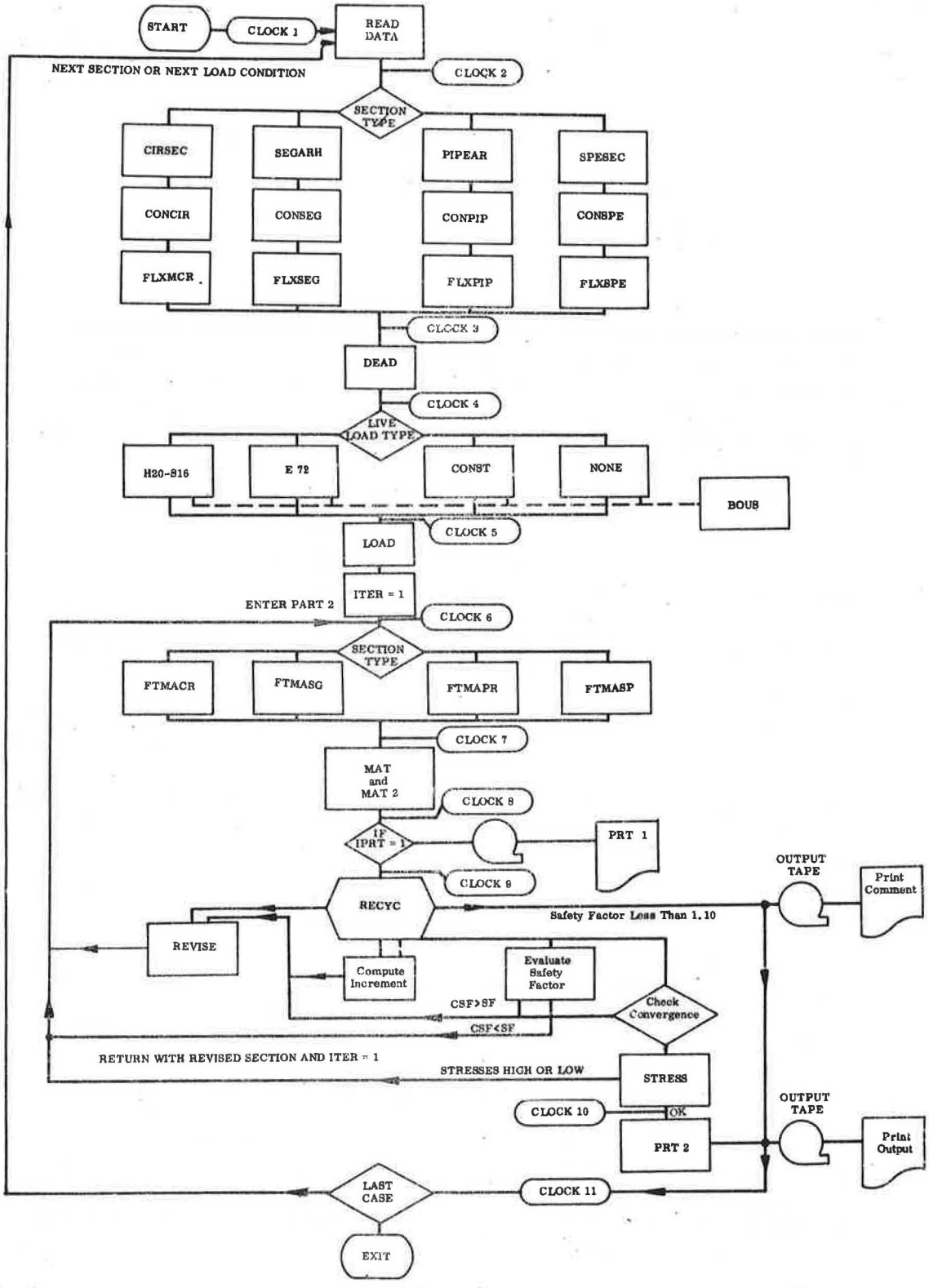

FIGURE-2 PROGRAM FLOW CHART

the analysis; namely, the coordinates of each of the points defining the mathematical idealization. After the geometry routine, the control passes to sub-routine FLXMCR, which generates the flexibility matrix for the circular section to be analyzed. Completion of this routine is followed by entry into sub-routine CONCIR which has the function of taking the soil characteristic parameters which define the deflection of the soil in response to unit pressures and converting them to force-deflection characteristics for the equivalent non-linear springs in the mathematical idealization. The effect of the radius upon the effective spring constants is calculated at this point. This sub-routine also generates an initial set of spring values to be used in the first cycle of analysis, since the deflections at the entry into this cycle are all zero. The initial computations associated with the circular section have now been completed and control passes to the sub-routines which compute the active pressures upon the culvert system. In the event that the selection of a different type of section has been made, the program would have passed through the alternate paths for the segmental arch, or special section as indicated in Figure 2.

Control now passes to the dead-load sub-routine which computes the unit vertical and horizontal pressures at each of the points around the culvert perimeter from the depth of fill to be considered. Control passes to an appropriate live-load sub-routine to evaluate the vertical unit pressures at each point in the culvert due to whatever system of live-load has been specified. The live-load sub-routines in turn may each call in the sub-routine BOUS, which analyzes the Boussinesq relationship for unit pressures at various points in the fill material with respect to the surface concentrated loads. When all dead-load and live-load unit pressures have been calculated, the control passes to the LOAD sub-routine which converts these unit pressures to appropriate forces acting upon the culvert in vertical and horizontal directions at each point on its perimeter.

At this point, an internal counter which is called ITER is set equal to one, to indicate that the program is about to begin the first cycle of statically indeterminate analysis based on the initial geometry. Control passes to sub-routine PART2, which is really a part of the main program but which has been set up as a sub-routine for convenience in checking out the program logic. Once in sub-routine PART2, program control passes to an appropriate routine to calculate the force transformation matrix for the type of section which is under analysis. For the circular sections this routine is identified as sub-routine FTMACR. The function of this sub-routine is to compute the bending moments and spring forces in the statically determinate base structure for

unit loads applied in either the vertical or horizontal direction at each point on the perimeter of the system, and also for unit loads applied in the direction of the redundants in the system. After the force transformation matrixes have been formed, the program passes to sub-routine MAT and MAT2. These two sub-routines carry out the sequence of matrix operations which perform the statically indeterminate analysis.

The following matrixes have been formed at the entry into MAT:

BOX	Member forces due to unit X loads.
BOY	Member forces due to unit Y loads.
B1	Member forces due to unit redundants.
FM	Member flexibility matrix.

The sequence of matrix operations is as follows, wherein an asterisk indicates a matrix multiplication and a T added to a matrix indicates its transform:

D1 = B1T*FM*B1

D1, Displacements at redundants due to unit redundants.

DOX = B1T*FM*BOX

DOY = B1T*FM*BOY

DOX, DOY, Displacements of redundants due to unit X and unit Y loads, respectively.

$D1^{-1}$, Inverse of D1

DKX = $-D1^{-1}$ *DOX

DKY = $-D1^{-1}$ *DOY

DKX, DKY, Redundants due to unit X and unit Y loads.

B1X = B1 *DKX

B1Y = B1 *DKY

B1X, B1Y, Member forces due to redundants resulting from unit X and unit Y loads.

BX = B1X + BOX

BY = B1Y + BOY

BX, BY, Member forces due to redundants plus external unit X and unit Y loads.

S = BX * PX + BY * PY

S, Member forces due to actual external loads, PX, PY.

BTFX = BXT * FM

BTFY = BYT * FM

BTFX, BTFY, Internal strains due to external loads.

DLXX = BTFX * BOX

DLYX = BTFX * BOY

DLXY = BTFY * BOX

DLYY = BTFY * BOY

DLXX, DLYX, DLXY, DLYY, Deflections in X and Y directions due to unit X and unit Y loads.

DLX = DLXX * PX + DLXY * PY

DLY = DLYX * PX + DLYY * PY

DLX, DLY, Deflections X and Y due to actual loads.

GX = BTFX * B1

GY = BTFY * B1

GX, GY, Deflections at redundants due to unit loads.

PCK = GTX * PX + GTY * PY

PCK, Check on deflections at redundants. This last operation is normally suppressed in production runs.

After the first cycle of analysis is complete the program will, if appropriate control information has been entered in the job card, print the status of the deflections at the end of this first cycle by calling sub-routine PRT1. Otherwise, the control will pass directly to sub-routine RECYC.

The function of sub-routine RECYC is to examine the results of the first cycle of indeterminate analysis to determine which path of calculations the program should take next. If it is the first or second cycle, control will pass unconditionally to sub-routine REVISE for the next iteration. On the third cycle, a similar transfer of control will take place after the computation of the increment of deflection which has occurred at the top of the culvert system. In the fourth cycle, this increment will again be computed, and on the basis of the change of this increment between the third and fourth cycles, an estimate will be made of the factor of safety of the structure against collapse. At this point, if the program option is used in which a trial value of stiffness is furnished and the computer is asked to seek out a proper value, the estimated factor of safety will be compared with that specified in the input data. If the section has been estimated to possess a factor of safety against collapse of less than that desired, it will be immediately revised by increased stiffness and the computation will return to cycle 1 with the revised section and the original geometry. If upon entry to this check of the factor of safety against collapse, the structure has a computed factor of safety equal to or greater than that desired, control will pass to sub-routine REVISE which will cause it to continue to iterate the solution until convergence occurs to the desired limit. The function of sub-routine REVISE is to change the coordinates of all points in the system in accordance with the deflections calculated in the cycle of analysis just completed. This revised geometry is then used in the formation of the force-transformation matrixes in the next cycle of analysis. Sub-routine REVISE also corrects the non-linear spring constants for the passive-pressure springs in accordance with the radial deflections resulting from the cycle of analysis just completed.

When an analysis has converged to the desired limits, control passes to sub-routine STRESS. This sub-routine computes the thrust, moment, and shear at each point in the culvert and then evaluates the direct and bending stresses and the maximum total stresses at each point. If any stress in the system exceeds the allowable stress by one percent, the section will be appropriately increased in stiffness and control will pass back to the initial cycle of analysis with the original geometry but with the revised stiffness. Subsequent entries to sub-routine STRESS will return the path of computation to a new analysis with a revised section

until all stresses fall within one percent of the allowable stress. In the event that the stresses computed are less than 99 percent of the allowable stress, indicating that reserve capacity is present, the program will examine the relation of the maximum stress to the permissible stress and the factor of safety against collapse, and select a revised section which will give the minimum stiffness consistent with meeting both of these requirements. Control will again be returned to the initial cycle of iteration with the original geometry but with the appropriate revised stiffness.

When the tests of permissible stresses and factor of safety against collapse have both been satisfied within the specified tolerance limits, control passes to the final printing program which prints out the results. This program is identified as sub-routine PRT2. Two tables of information are printed at this time. The first gives the original geometry of the section, the deflections at each point in the perimeter, and the active pressures acting on the system. The second table gives the moment of inertia, cross-sectional area, thrust, moment, and the direct, bending, and total stress at each point in the section. A final column in this table contains either a zero or a one depending on whether or not any of the stresses exceed the permissible stress in any way.

As mentioned early in the discussion of this flow chart, there are a number of points during the program where special remarks are printed to allow the user to determine what is occurring in the actual computations.

The program contains certain internal checks and controls which concern the user only indirectly but which were used during the program check-out phases to insure the accuracy and reliability of the analysis. These controls consist of three groups; (1) traps which detect illegitimate input parameters, such as section type identification numbers which do not refer to any section provided for, (2) parallel path and arithmetic checking routines such as the equilibrium checks in the matrix analysis, and (3) logic traps to prevent runaway conditions, such as that which will terminate the analysis if the safety factor against collapse falls below 1.10.

Use of the Program

The program in its present form provides for the following variations in function:

A. Type of Section

1. "Circular" section with specified percent elongation of the vertical axis.

2. "Arch" section with arbitrary central angle and tangent length.

3. Special section, any shape having a vertical axis of symmetry.

B. Loading

1. Dead Load - any fill height with any specified unit density.

2. Live Load - AASHO H20 S16 Highway loading with appropriate impact factor.
AREA Cooper E72 Railway Loading or special 120 kip construction load. No live load at all may also be specified.

C. Program Functions

1. Determine behavior of section of specified properties.

2. Search out required section to product stresses within desired limit and safety factor against collapse of specified minimum value.

D. Section Properties

Culvert may have any arbitrary distribution of stiffness as long as consistent relation between moment of inertia, section modulus, and area is maintained.

E. Soil Properties

Unit weight and hydrostatic coefficient are specified as desired. The effective "elastic" modulus controlling passive pressures may be set as any second-degree function of displacement, and may be independently specified for each passive pressure "spring" if so desired.

F. Passive Pressure Modes

As many as desired of the passive pressure "springs" may be set to respond only to the lateral component of deflection, in order to reflect only the relative horizontal motion of culvert and adjacent fill material.

APPENDIX B

JOINT TESTS

Bolted joints of light gage metal have failure modes which defy mathematical prediction using the usual analytical approaches. Bolt rotation and localized buckling, as well as the usual bearing and shear phenomena, affect joint strengths to such an extent that recourse to actual laboratory tests (6) is the only practical solution.

Moment and thrust are the two principle internal forces that require laboratory definition. The compression test is a standard short-column test of the following dimensions:

Net width	= Three 9" corrugations + 1 1/2" edge margin each side
Height	= 12 1/4"
No. Fasteners	= 14
Fastener size	= 3/4" dia.

A summary of a joint study recently completed is presented in Table 1.

TABLE I

			Mechanical Properties by Std. ASTM Tests			Bolt Alloy				
Item	Nominal Gage	Actual Gage	Ten. Yield	Ten. Ult.	Elong-ation	A325	6061-T6	* Ult. load per bolt	⑧ / .75 x ② Brg. Stress @ Ult. load	Failure Mode
	①	②	③	④	⑤	⑥	⑦	⑧	⑨	
1	.090	.090	30,680	40,450	7.5	—	✓	4.92	73,000	Bearing
2	.090	.090	29,540	36,360	11.0	—	✓	4.33	64,100	Bearing
3	.125	.127	32,520	39,510	14.5	—	✓	7.39	78,800	Bearing
4	.184	.182	28,400	36,360	14.0	—	✓	10.30	75,500	Bearing
5	.250	.260	32,540	39,330	16.0	✓	—	13.32**	68,300	**

* Average value of test group.
** Load at which test jig failed. Test not rerun.

The reduction of the test data of Table 1 into design ultimate thrust capacities involves the reduction of the data to the minimum properties defined for aluminum structural plate.

To establish a relationship of yield strength and bearing strength the slope of the curve of these properties was drawn using minimum mechanical property values as defined by the Aluminum Association for 5052 alloy.

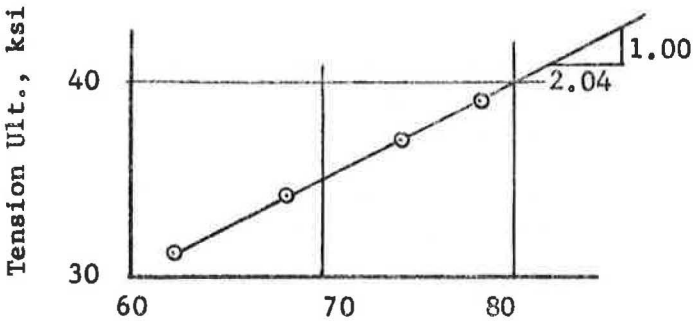

Ultimate Bearing Strength, ksi

TENSION ULT. vs. BEARING ULT. FOR 5052

(As plotted for minimum values)

Using the resultant slope, the test values were then extrapolated to the minimum yield stress.

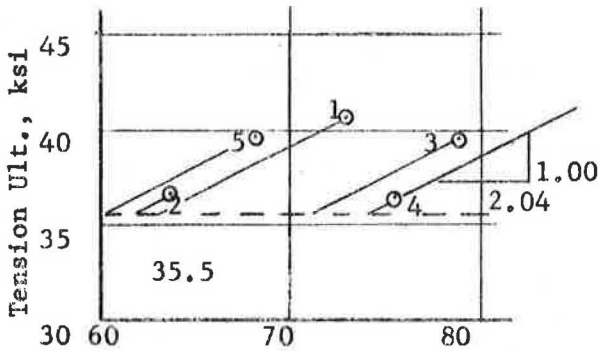

Design Ult. Bearing Strength, ksi

CORRECTION FOR VARIATION
OF
TENSION ULTIMATE

Item	Design Ult.Bearing
	ksi
1	62.9
2	62.3
3	70.6
4	73.7
5	60.5

PROJECTED
ULT. BEARING STRENGTH

Because the test values for Item 5 were not ultimate values for the joint system, a conservative assumption was made that the ultimate bearing strength of .184 gage would apply to all heavier gages. Based on this assumption, and using the lesser bearing value for .090 gage (Item 2), the design thrust capacities for all gages were calculated.

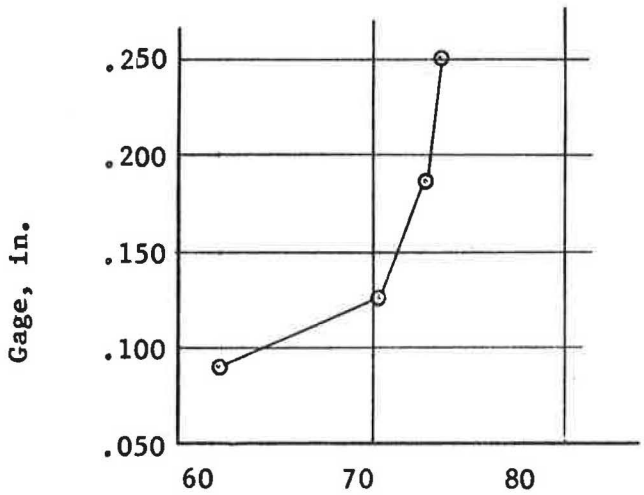

Design Ultimate Bearing Strength, ksi

DESIGN BEARING STRESS
Min. Tension Ultimate = 35.5 ksi

Fastener Mat'l.	Gage	Ultimate Thrust Capacity
	Inches	Kips/Ft.
Alum.	.090	22.4
Alum.	.100	25.8
Alum.	.125	35.3
Alum.	.150	43.1
Alum.	.175	51.1
Steel	.200	59.0
Steel	.225	66.3
Steel	.250	73.7

DESIGN ULTIMATE THRUST CAPACITY

Min. Tension Ultimate - 35.5 ksi
5 1/3 bolts/foot

Ultimate moment capacities of the complete gage range were derived from third-point line-load flexure tests of specimens having the following dimensions:

Width = Three 9" corrugations + 1 1/2" edge margin each side

Length = 18"

The corrugation and joint pattern are as shown in Appendix D. A summary of the test results is presented in Table II.

TABLE II

			Mechanical Properties by Std. ASTM Tests			Bolt Alloy		Ult.* Mom. per ft. of seam	** Ult.Mom. Corrt. for gage	Ult.Mom. corrt. for ult.stress ⑨ x 35,500 / ⑤
Item	Nominal Gage	Actual Gage	Ten. Yield	Ten. Ult.	Elong-ation	A325	6061-T6			
	in.	in.	psi	psi	%			k-in/ft.	k-in/ft.	k-in/ft.
①	②	③	④	⑤	⑥	⑦		⑧	⑨	⑩
1	.090	.090	30,680	40,450	7.5	—	⌐	31.2	31.2	27.3
2	.090	.090	29,540	36,360	11.0	—	⌐	28.8	28.8	28.1
3	.090	.090	28,400	39,090	11.0	—	⌐	30.7	30.7	27.8
4	.125	.127	32,520	39,510	14.5	—	⌐	48.0	47.2	42.4
5	.184	.182	28,400	36,360	14.0	—	⌐	66.7	67.4	65.8
6	.250	.260	32,540	39,330	16.0	—	⌐	101.0	97.2	87.8
7	.250	.258	11,600	28,320	18.0	—	⌐	78.0	75.5	94.7
8	.250	.260	32,940	39,520	16.0	⌐	—	98.4	94.7	85.2
						—	⌐	109.5	105.2	94.8

* Average value of test group.
** Corrected for actual gage.

The reduction of the raw data into meaningful design values requires that the figures be corrected for gage and ultimate strength. The gage correction is linear, and assumes that the ultimate strength is directly proportional. The correction of the ultimate-moment capacities for the difference in the specimen ultimate tensile strength (the mode of failure) to the minimum properties defined for the product is also assumed to be directly proportional to that strength.

The moment capacities as defined by test and corrected for gage and tensile strength are shown in Col. 10 of Table II. The minimums for each gage tested are shown on the following plot from which moment capacities of the remaining gages are interpolated.

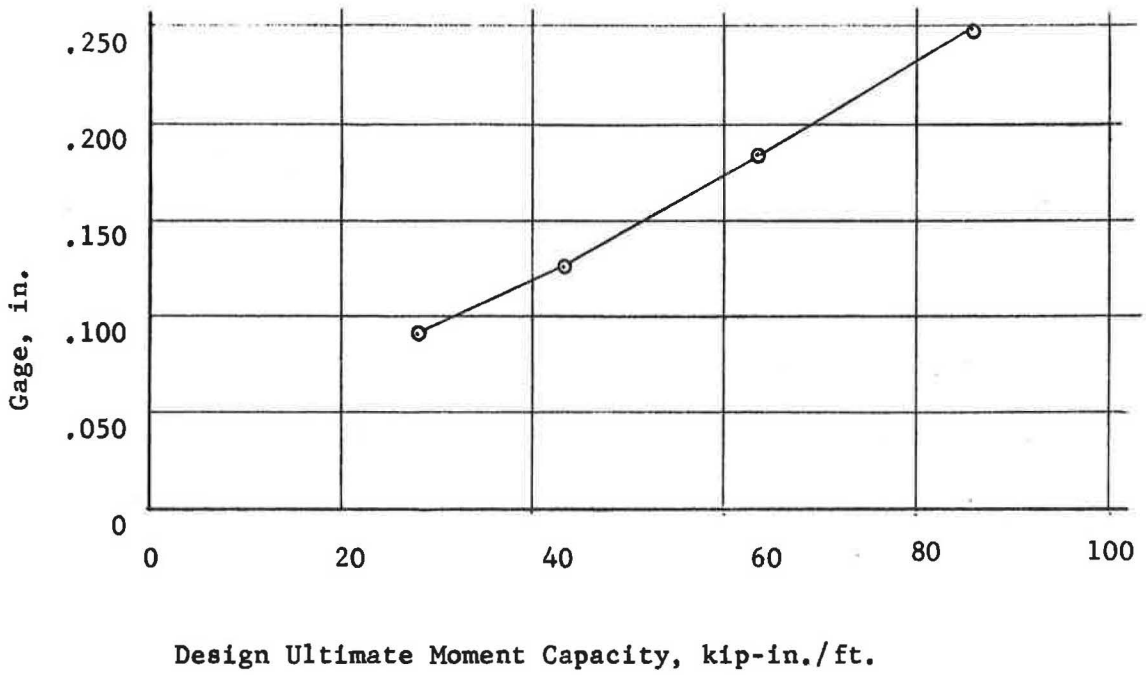

A tabulation of these capacities is shown below:

Gage	Ultimate Mom. Capacity
Inches	kip-in./ft.
.090	27.3
.100	31.0
.125	42.4
.150	52.0
.175	62.5
.200	70.5
.225	78.0
.250	85.2

APPENDIX C

PHYSICAL PROPERTIES

OF

CORRUGATION

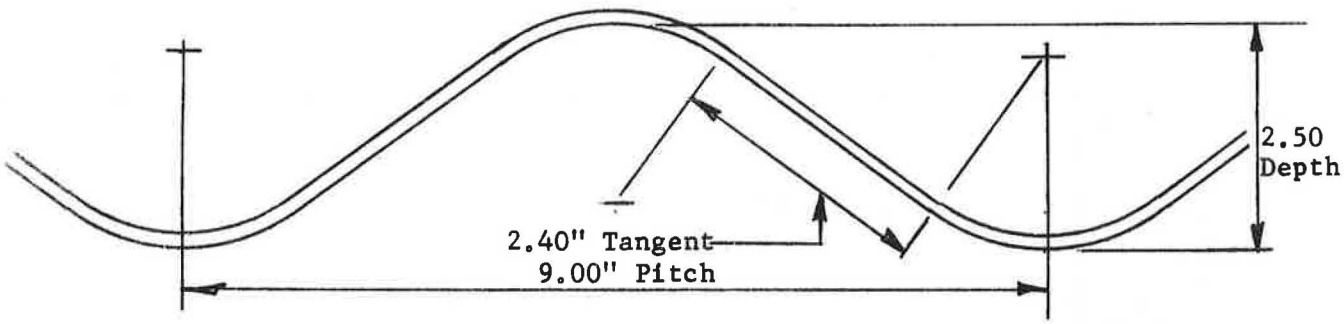

Thickness	Moment of Inertia in^4/in	Section Modulus in^3/in	Radius of Gyration in/in	Area of Section in^2/in
.090	.082	.066	.883	.105
.100	.091	.073	.883	.117
.125	.114	.091	.883	.146
.150	.136	.109	.883	.175
.175	.159	.127	.883	.204
.200	.182	.145	.883	.234
.225	.205	.164	.883	.263
.250	.227	.182	.883	.292

NOTE: This data subject to manufacturing tolerances.
Data computed per inch of horizontal projection.

STANDARD PLATE SIZES

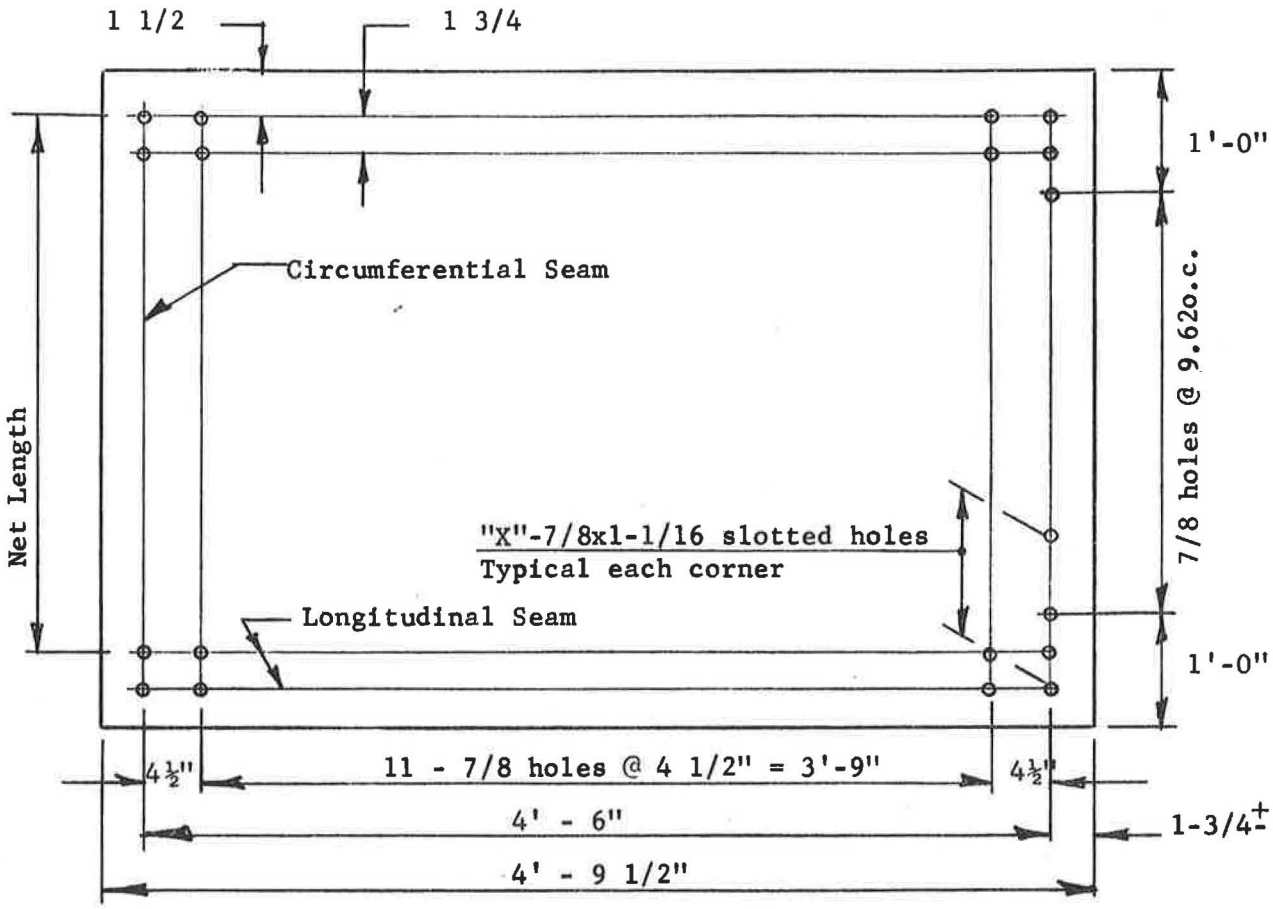

UNCURVED PLATE DETAIL

All holes 7/8 unless otherwise noted.

Net Length		Gross Length	
N	In.	In.	X
8	76.96	81.71	4
9	86.58	91.33	4
10	96.20	100.95	4
11	105.82	110.57	5
12	115.44	120.19	5
13	125.06	129.81	5
14	134.68	139.43	5

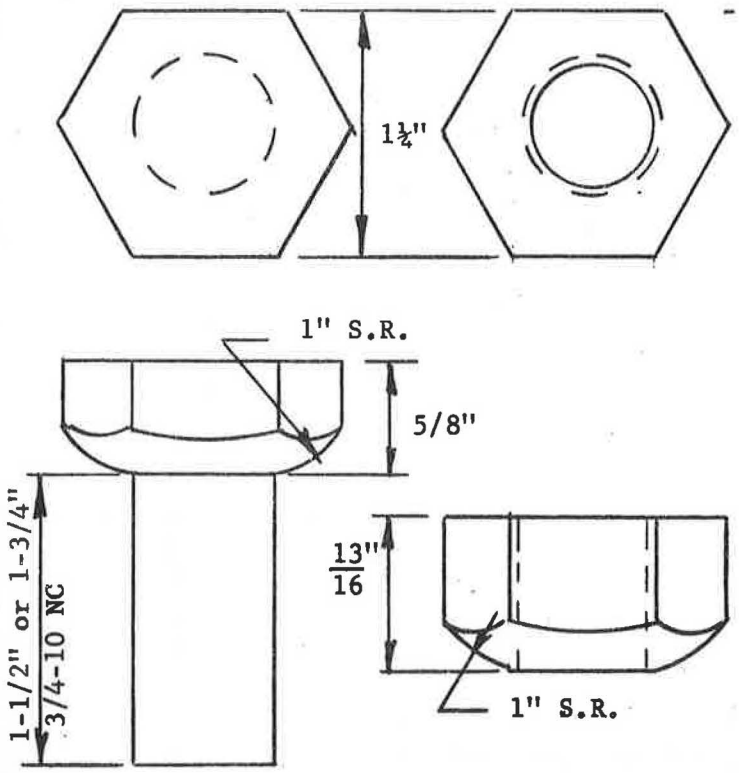

STEEL FASTENER DETAIL

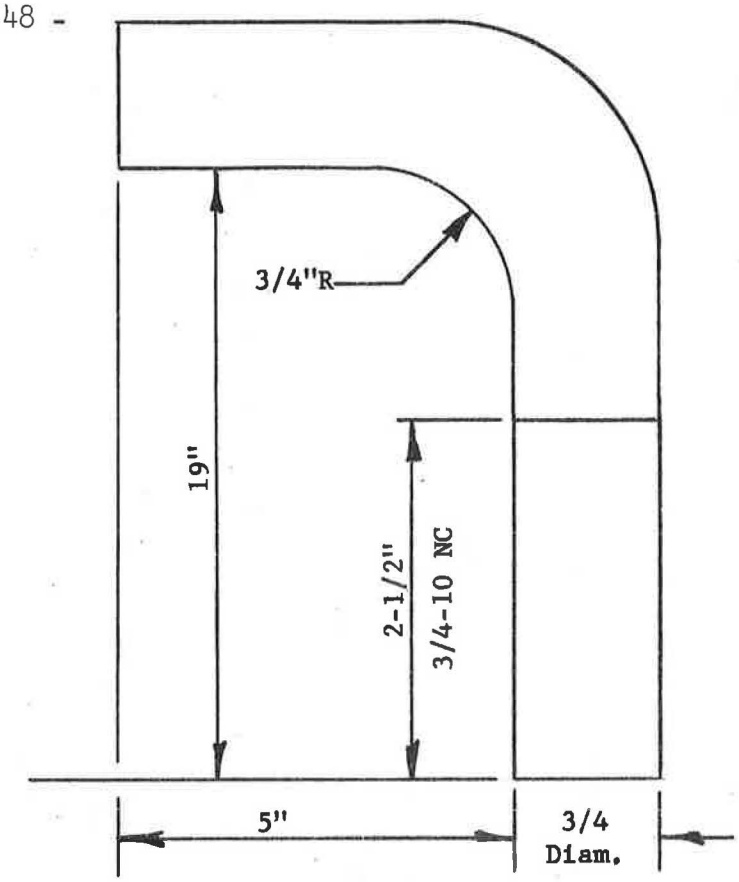

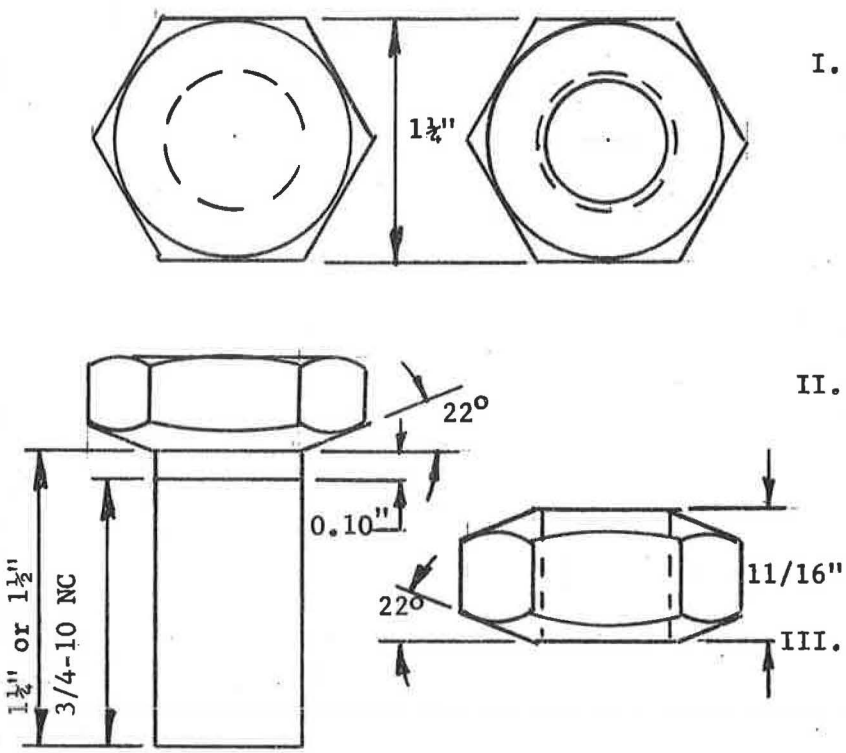

ALUMINUM FASTENER DETAIL

MATERIAL SPEC.

I. Steel
A. Alloy - Bolt A325 or A307
Nut A307
Hook Bolt A307

B. Coating - Hot double dipped galvanized per ASTM A394 or aluminized per bethalume process or approved equal

II. Aluminum
A. Alloy - Bolt 6061-T6
Nut 6061-T6

B. Coating - Suitable wax coating, internal thread of nut only

III. Color Coding

Length	Color
1 1/4	No color
I 1/2	Green
1 3/4	Red

DEPARTMENT OF MATERIALS AND CONSTRUCTION

R. L. Peyton, Chairman
Assistant State Highway Engineer
State Highway Commission of Kansas
Topeka, Kansas

GENERAL MATERIALS DIVISION

John L. Beaton, Chairman
Materials and Research Engineer
California Division of Highways
Sacramento, California

COMMITTEE ON CULVERTS AND CULVERT PIPE *

Dr. Reynold K. Watkins, Chairman
Mechanical Engineering Department
Utah State University
Logan, Utah

Members

DeCapiteau, T.F., Drainage Products Engineer, Manufacturing Division, Republic Steel Corporation, Youngstown, Ohio
Drake, W.B., Asst. State Highway Engineer for Planning, Research and Materials, Kentucky Department of Highways, Lexington, Kentucky
Eff, Kenneth S., Chief, Hydraulic Section, Civil Engineering Branch, Office, Chief of Engineering, Department of the Army, Washington, D.C.
Francis, C.J., Director, Engineering Division, Soil Conservation Service, U.S. Department of Agriculture, Washington, D.C.
Healy, R.T., Executive Secretary, Connecticut Concrete Pipe Association, Inc. South Windham, Connecticut
Hendrickson, John G., Jr., Water Resources Bureau, Portland Cement Association, 33 West Grand Avenue, Chicago, Illinois
Koepf, A.H., Consulting Engineer, P.O.Box 236, Orinda, California
Myers, J. Alan, Manager, Architectural Products, United States Steel Corporation, Pittsburgh, Pennsylvania
Nordlin, Eric, Supervising Highway Engineer, California Division of Highways, Sacramento, California
Proudley, C.E., Materials Consultant, 829 Lake Boon Trail, Raleigh, North Carolina
Sellner, E.P., Hind Engineering Company, 654 Deerfield Road, Highland Park, Illinois
Smith, Rockwell, Research Engineer - Roadway, Association of American Railroads, 3140 S. Federal Street, Chicago, Ill.
Spangler, Professor M.G., Civil Engineering Department Iowa State University, Ames, Iowa
Swanson, Harold V., Manager, Civil Engineering, International Pipe and Ceramics Corporation, P.O.Box 1111, Parsippany, New Jersey
White, H.L., Chief Engineer, Metal Products Division, Armco Steel Corporation, 1001 Grove Street, Middletown, Ohio

* As of December 31, 1965