Effectiveness of Hinge Restrainers as Seismic Retrofit Measure

M. Saiidi and E. Maragakis, *University of Nevada*

A summary of (a) the performance of hinge restrainers based on a field investigation of several bridges after the 1989 Loma Prieta earthquake and (b) important aspects of restrainer design for bridges with narrow seat widths is presented. The observed characteristics of restrainer behavior are described. The field investigations showed that the entire restrainer system (which consists of the restrainers, connection hardware, diaphragms, and the superstructure) and not merely the restrainers should be considered at the time of design. The weak link in the system for bridges with narrow seats needs to be the superstructure. The sensitivity studies revealed that small changes in the assumptions made in the design can affect the required number of restrainers. It was also found that the most critical case for restrainer design corresponds to the condition when the restrainer gap is zero, whereas the critical abutment forces during the earthquake may occur when the restrainer gap is maximum.

One of the lessons learned from the 1971 San Fernando earthquake in southern California was that highway bridges with narrow seat widths at the hinges may be susceptible to collapse because of movements that are beyond the available seat width (*1*). Following that earthquake the California Department of Transportation (Caltrans) identified 1,250 bridges of its inventory of approximately 13,000 structures as having vulnerable hinges (*2*). To prevent excessive movements at the hinges, these bridges were retrofitted with steel cable or high-strength rod hinge restrainers under Caltrans' Phase I retrofit program. This phase was completed in 1985 at a cost of $55,000,000 (*3*). Following the 1989 Loma Prieta earthquake in northern California (*4*), many states initiated a seismic retrofit program that included the installation of hinge restrainers in many of their existing bridges (*5*). The Loma Prieta earthquake provided an opportunity to study the effects of restrainers on the responses of bridges. The purpose of this paper is to provide an overview of the important characteristics of the restrainer response during the Loma Prieta earthquake and to discuss some of the factors that affect the design of restrainers.

Restrainer Response During Loma Prieta Earthquake

Damage Overview

The Caltrans Maintenance Division identified 23 bridges that were retrofitted with restrainers and that were damaged by the Loma Prieta earthquake. General structural data about these bridges were compiled on the basis of bridge plans. A summary of the main features of each bridge and the damage has been presented elsewhere (*6*). The number of spans in the damaged

bridges ranged from 3 to more than 100 in some of the major viaducts. The number of hinges also varied considerably. The damaged bridges were originally constructed between 1941 and 1971. Some of these bridges underwent reconstruction in a variety of forms at later dates. Because all of the major parameters for the damaged bridges were highly variable, no clear pattern could be identified among these bridges except for the year of construction, which reflects the bridge design provisions of the time.

The most common damage caused by the Loma Prieta earthquake was excessive hinge opening and cracking of columns. Large hinge movements caused cracking of the abutments in some cases. The lack of reported damage in footings is, in part, attributed to the lack of inspections of the column bases. There was no apparent correlation between the number of spans and damage. The lack of pattern in the damage may be attributed to the fact that the intensity of the ground motion varied considerably among the bridges. Judging by the hinge openings and pounding damage in the hinges, it appeared that restrainers were activated in many instances, but they failed only in two cases. Field observations cannot generally determine the extent of stresses in the restrainers if they are not damaged. Therefore, detailed analyses are necessary. The Caltrans damage reports indicated that restrainer connector damage was noted only in a few cases. Furthermore, very few diaphragms were damaged by the earthquake. Pounding at the hinges was observed in many cases, which indicated relatively large movements.

Field Investigation of Hinge Damage

Three of the damaged bridges were investigated in the field by the authors. These structures were the Central Viaduct in San Francisco, the Route 580/24/980 Separation in Oakland, and the northeast connector in the Route 92/101 Separation in San Mateo.

Central Viaduct

The Central Viaduct structure is a long, multispan bridge, a segment of which is of double-deck reinforced concrete construction changing into a single-deck steel girder construction. The reinforced concrete segment is a cast-in-place multicell box girder type constructed in 1957. It was retrofitted in 1972 with hinge restrainers because of its narrow hinges, which have a nominal width of 150 mm (6 in.). Both C-5 and C-7 (7) restrainer types are used in different hinges (Figure 1). The Loma Prieta earthquake caused some visible cracking of the piers and pier cap column joints in the double-deck segment of the bridge. As a result the

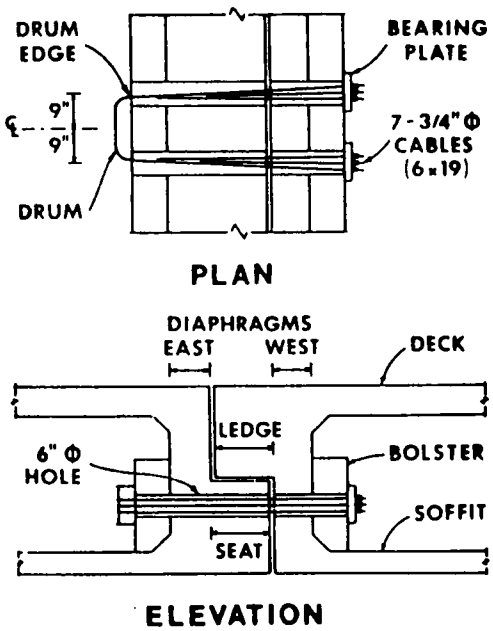

FIGURE 1 Details of a C-7 restrainer (1 ft = 0.305 m; 1 in. = 25.4 mm).

bridge was closed to traffic at the time of the visit, which took place on June 10, 1991. The hinges were inspected from the top of the upper deck to determine any significant hinge rotation or opening. The hinge gaps at the east and west edges of the superstructure were measured. No significant permanent rotation was noted except for one hinge in which a differential gap of 13 mm (½ in.) was noted between the east and the west edges. This and another hinge were inspected from inside the superstructure cells. The restrainer type in one hinge was C-7, and the one in the other was C-5. None of the restrainers showed any sign of damage. The uppermost cable in the restrainer with seven cables had left some marks on the corners of the C-drum, indicating that the cables experienced significant tension. It appeared that, as a result of tensioning and detensioning, the cables had shifted downward by approximately 13 mm (½ in.). Because the vertical space on the drum is limited, the shift pushed the second cable out from the bottom. The effectiveness of this cable in developing its full yield strength in the future may be questionable because of friction and stress concentration.

580/24/980 Separation

The 580/24/980 Separation structure was retrofitted in 1980 with high-strength rod hinge restrainers of 32 mm (1.25-in.) in diameter. The superstructure type is cast-in-place multicell reinforced concrete box girder. The bridge contains many hinges, incorporating a variety of

configurations and numbers of restrainers. The restrainers are generally distributed around the diaphragms. A reinforced concrete bolster is provided in skewed hinges. Significant spalling of concrete at the bottom of the superstructure was noted at two hinges as a result of the 1989 Loma Prieta earthquake. Figure 2 shows the crack pattern and the spalled areas, which are marked by hatched zones. The damaged hinges were perpendicular to the bridge axis and had no bolsters. The damage in the soffit in the East Connector Viaduct was evident near the west edge of Hinge 20. At that hinge two sets of restrainers were installed, with one consisting of five rods placed in one row at 0.3 m (1 ft) from the top of the lower slab and the other consisting of six rods placed in two rows of three each. The damage occurred in the west cell, in which the rods had been placed in one row. There was a punching-type failure of the diaphragm (Figure 3). No damage was evident in the cell with two rows of rods. The punching shear cracks extended to the bottom slab, thus causing the concrete to spall off the soffit. This was visible from outside the cell. The damage in the soffit of the North Connector Viaduct was similar. The cause of damage is attributed to the inadequate punching shear strength of the diaphragms. The restrainers in the damaged cells were placed in one row. The associated critical punching shear sections are shown in Figure 4. Note the relatively small and narrow area when the rods are placed in one row. Tests on the punching shear strengths of reinforced concrete slabs have shown that the shear strength drops as the aspect ratio of the loaded area increases (*8*). Based on an effective depth of 0.3 m (12 in.) and a concrete strength of 28 MPa (4,000 lb/in.^{2}), the permissible punching shear strengths are estimated to be 1290 and 1420 kN (290 and 320 kips) in Hinges 20 and 33, respectively. Because of the proximity of the rods to the bottom slab and because the bottom slab presented a weak area, the lower part of the critical section shown in Figure 4(*a*) did not actually develop

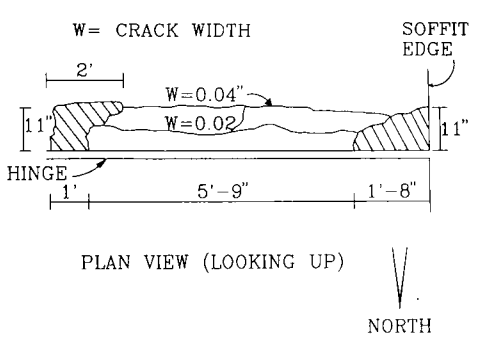

FIGURE 2 Crack pattern in the soffit of 580/24/980 Separation structure (1 ft = 0.305 m; 1 in. = 25.4 mm).

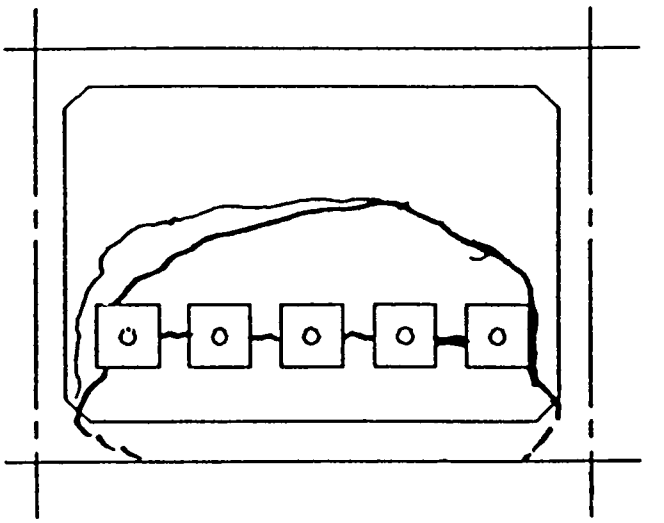

FIGURE 3 Punching shear failure inside the cell.

in the bridge. Rather, the punching shear failure lines extended to the bottom slab (Figure 2). Therefore, the actual permissible strength was even lower than these values. The total yield force is 3340 kN (750 kips) for five high-strength rods and 4000 kN (900 kips) for six high-strength rods. The punching shear strengths of the diaphragms were 1290 to 1420 kN. It can be observed that approximately 40 percent of the restrainer yield force was sufficient to cause the diaphragms to fail.

It should be noted that in excess of 100 sets of restrainers are used in the structure and that damage was observed in only two of the diaphragms. It was recommended to Caltrans that all of the cells that are retrofitted with one row of rods and that are not retrofitted with a bolster be reevaluated and that the diaphragms be strengthened.

92/101 Separation

The northeast connector in the 92/101 Separation structure was investigated because of excessive crack openings in the soffit of the superstructure that were noted after all of the earthquake damage had been repaired. The superstructure is a cast-in-place, four-cell box section supported on single-column piers of various heights. The hinges are equipped with eight sets of five 17-mm (3/4-in.) straight cable restrainers placed in all of the cells. The Caltrans Maintenance Division records indicate that the structures at the interchange suffered significant damage during the earthquake. The damage ranged from spalling of superstructure concrete near several joints to excessive hinge movements. Figure 5 shows a sample of the crack patterns. The crack widths are marked in inches. Note that the cracks were nearly

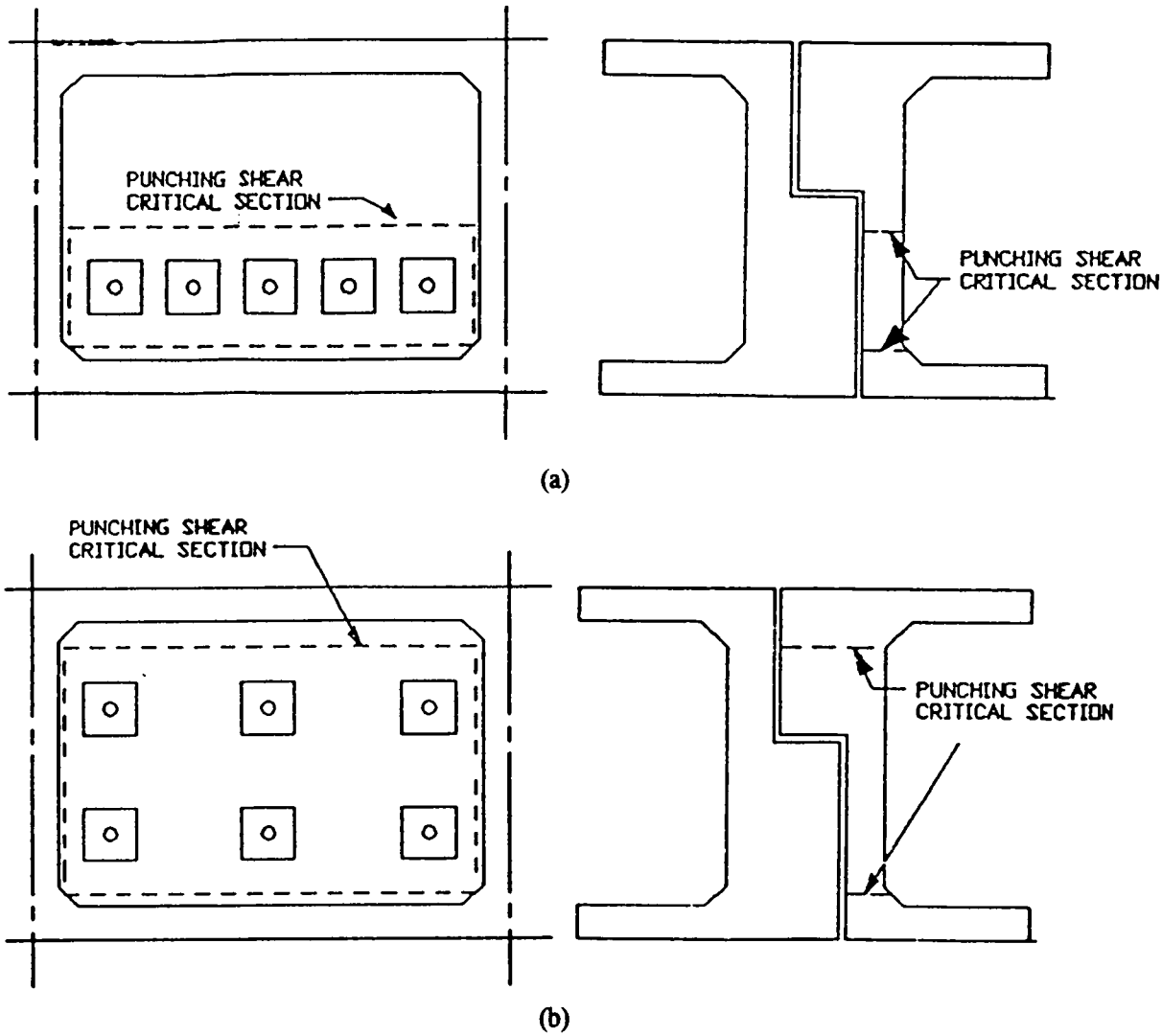

FIGURE 4 Punching shear failure lines for (*a*) one row of restrainers and (*b*) two rows of restrainers.

parallel with slight inclination and that they extended to nearly the full height of the girder. The fact that the cracks were nearly vertical suggested that they were not caused by shear. Because the location of the cracks was close to the hinge, the moments had to be relatively small and the cracks could not have been caused by flexure alone. The damage to one of the columns and the spalling of concrete at the hinge could indicate relatively large movement of the superstructure and the activation of the restrainers. The total yield force for the restrainers was 6960 kN (1,560 kips). The direct tensile cracking strength of the superstructure is 10 200 kN (2,300 kips), based on a concrete compressive strength of 28 MPa (4,000 lb/in.^{2}) and assuming a tensile strength of 0.5 $\sqrt{f'_c}$ (6 $\sqrt{f'_c}$), where f'_c is the concrete compressive strength in terms of megapascals (pounds per square inch). The comparison of these figures suggests that it is unlikely that restrainer forces alone caused the cracks. However, it is possible that the restrainer tensile force in the superstructure reduced the flexural strength and helped open the flexural cracks that were developed by vertical loads.

The sensitivity of the flexural strength and the cracking moment of the superstructure to axial tension was calculated. It was determined that for a restrainer force of one-half of the yield force (a force level expected during a moderate earthquake) the ultimate positive and negative moment capacities would drop by approximately 30 and 13 percent, respectively. When the restrainers approach the yield level, the ultimate positive and negative moment capacities drop by approximately 65 and 25 percent, respectively. Although it was not evident in this bridge, the axial tension could also significantly reduce the shear strength of the section (*8*).

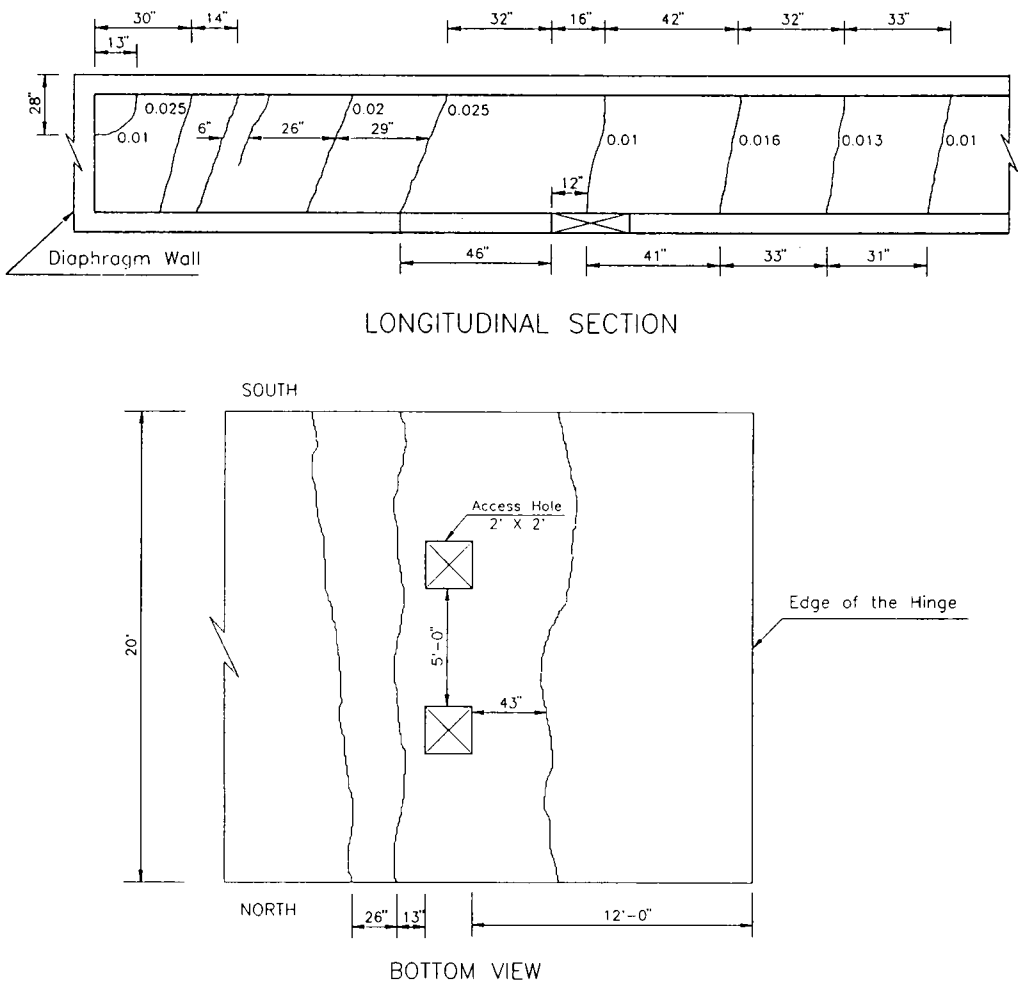

FIGURE 5 Girder and bottom slab cracks in the 92/101 Separation structure (1 ft = 0.305 m; 1 in. = 25.4 mm).

In prestressed concrete members the tension will reduce the effective prestress force. These effects are not usually considered in design, but they can be critical. It can be observed that the placement of too many restrainers can have detrimental effects on the superstructure.

Characteristics of Restrainer Response in the Field

Hinge restrainers need to be treated as systems consisting of three components: (a) the restrainers, (b) the connecting hardware and the diaphragms (if any), and (c) the superstructure adjacent to the hinge. Although restrainer systems performed reasonably well during the Loma Prieta earthquake, in a few instances they pointed out the fact that each component of the system can be vulnerable. Because the design and construction of restrainers have gone through an evolution leading to many variations in restrainer systems, and because the intensity of the ground motion varied for different bridges, it is not generally possible to pinpoint which component presents the weak link.

Restrainer systems can be designed so that the weak link is at a predetermined component. Because the function of hinge restrainers is different in old bridges [those with a nominal seat width of 150 mm (6 in.)] and new bridges [those with a nominal seat width of 0.6 m (2 ft)], the restrainer design philosophy can be different for each group. In older bridges the function of restrainers is to prevent excessive relative movement at hinges. As a result restrainers should be designed to prevent yielding even under the maximum credible earthquake. No yielding should be allowed in the connecting hardware or the diaphragms. Cracking of the superstructure under tension from the restrainers may be tolerable. However, the effect of the tension on the

moment and shear capacity of the superstructure needs to be accounted for in retrofit design.

The purpose of restrainers in new bridges is to provide overall integrity for the superstructure. Yielding of the restrainers can result in large hinge movements, but because the seats are wide, the movement may not necessarily be critical. As long as the restrainers have a reasonable level of strain hardening, restrainer yielding may be tolerable. Furthermore, the relative ease of restrainer replacement after earthquakes makes restrainers a good candidate for being the weak link in the restrainer systems for new bridges.

Design of Restrainers for Existing Bridges

The design of restrainers for new bridges is frequently based on a modal analysis of the bridge. For existing bridges restrainers are used as a retrofit measure, and their design is based on an equivalent static analysis method that incorporates many of the primary factors affecting the seismic responses of bridges (7). Several simplifying assumptions are made on the basis of engineering judgment and observations made during past strong earthquakes. Although the performances of restrainers that have been designed by the current methodology have generally been satisfactory during recent moderate earthquakes, many aspects of the restrainer design method have not been studied in detail. This section presents a study of some of these aspects of the hinge restrainer design method. More details are presented elsewhere (6).

Several simplifying assumptions are made in calculating the effective stiffness and mass. An initial restrainer gap of 19 mm (0.75 in.) is assumed. This corresponds to the extreme high ambient temperature. A "frame" is defined as the part of the bridge that is between two adjacent hinges or that is between a hinge and the adjacent abutment. The assumptions influence the equivalent vibration period of different frames or groups of frames and eventually affect the number of required restrainers. The example bridge presented elsewhere (7) (Figure 6) was used to illustrate the effects. The bridge has three intermediate hinges that are numbered from left to right and a hinge at the left abutment. The peak bedrock acceleration is assumed to be 0.6 *g*. Only 19-mm (3/4-in.) cable restrainers were considered in the study.

Influence of Changes in Stiffness and Mass

To determine the relative movements in the unrestrained condition, the bridge structure on each side of the hinge is considered separately. As each frame moves away from the hinge, it closes the gap at an adjacent hinge, thus mobilizing a second frame. If the frame continues to move in the same direction, another hinge may close, which leads to the mobilization of a third frame or an abutment. The current design method accounts for the closure of only one adjacent hinge and permits the mobilization of only one adjacent frame regardless of the displacement. This assumption simplifies the analysis and is intended to be conservative. It is also assumed that the mass for only one frame should be used in computing the effective period of vibration for the segments, even when more than one frame is mobilized.

Column 3 in Table 1 lists the number of restrainer groups (each consisting of 10 cables) required on the basis of the current method. The effect of allowing more than one frame to contribute to the stiffness and mass, when displacements are sufficiently large to close the hinge gaps, can be observed in column 4 in Table 1. Two cable lengths of 1.5 and 2.1 m (5 and 7 ft) are considered in design. Hinge 1 did not need a restrainer when 2.1-m (7-ft) cables were used. It can be observed that by changing the treatment of the mass, the number of cables is reduced drastically. The general explanation for this reduction is the fact that the added masses increased the effective period considerably. The period elongation, in turn, reduced the acceleration response spectrum (ARS) value, and the reduced ARS value led

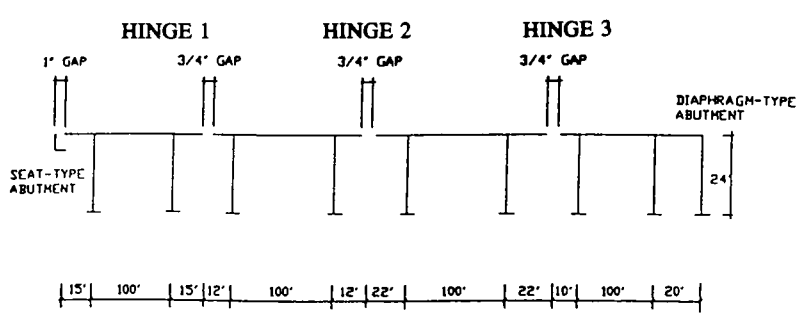

FIGURE 6 Bridge model used in parametric studies (1 ft = 0.305 m; 1 in. = 25.4 mm).

TABLE 1 Number of Required 10-Cable Units for Different Designs

(1) Hinge	(2) Cable Length m (ft.)	(3) Original Design	(4) Modified Eq. Stiff. & Mass	(5) Zero Rest. Gap
1	1.5 (5) 2.1 (7)	10 8	4 -	15 13
2	1.5 (5) 2.1 (7)	12 7	7 2	15 14
3	1.5 (5) 2.1 (7)	13 11	6 2	16 15

to smaller displacements. Because restrainers are designed to control relative movements at hinges, smaller displacements required fewer cables. Note that the current method is conservative in that it requires a larger number of restrainers. However, the level of conservatism is not uniform among different hinges.

Influence of Reducing Restrainer Gap to Zero

During extreme low ambient temperatures the superstructure segments become shorter. As a result the restrainer gap may diminish, whereas the hinge and abutment gaps increase. When the restrainer gaps in the example bridge are reduced to zero, the allowable cable "deflection" and the seat width required to maintain a 75-mm (3-in.) minimum bearing specified in design will be reduced. The effects of these changes on the number of required restrainers are shown in Column 5 in Table 1. As expected, a larger number of restrainers is required to maintain the minimum bearing width. The results suggest that if an earthquake occurs when the ambient temperature is low, retrofit restrainers designed by the current method may not be able to reduce the relative hinge movements below the critical limits. The Northridge earthquake of January 1994 led to the unseating of several hinges (*9*). Although no detailed analysis of the collapsed bridges has been performed as of this writing, the present study suggests that the cold temperature at the time of failure could have been a contributing factor to the failure of some of the restrainers.

Sensitivity to Calculated Maximum Displacement

The cross-sectional area of the restrainers is designed on the basis of the calculated maximum displacement of the unretrofitted frames. The maximum displacement is determined by using an equivalent linear analysis assuming that one-half of the columns in each frame have yielded. A modal analysis is used and is based on equivalent stiffness and mass (*7*). Because this analysis is approximate, it can only provide an estimate of the frame movement. Although this approximation may be within engineering accuracy for most applications, it falls short of providing an acceptable design for restrainers. This is because restrainers are designed on the basis of the difference between the estimated maximum displacement and an acceptable seat width. To determine the effect of slight variations in the estimated maximum displacements, the restrainers in the example bridge were redesigned assuming a ±20 percent displacement error. The results indicated that the number of restrainers can change by as much as ±70 as a result of this error.

Discussion on Restrainer Design

The results discussed in the previous sections indicate that the assumptions made in the design of restrainers can greatly change the results. An improvement in the methods used to calculate the stiffness and mass leads to a reduction in the number of the restrainers, thus suggesting that the current method is conservative. However, when the restrainer gap is reduced, the number of the restrainers increases considerably, thus suggesting that the current method is unconservative. The field observations during the 1989 Loma Prieta earthquake indicated that the current design method may be safe and conservative. The 1994 Northridge earthquake led to larger hinge movements and unseated several spans.

The high degree of sensitivity of the results to the assumptions is due to the fact that the equivalent static method is extremely approximate for calculating the relative hinge movements. It is not appropriate to modify the current restrainer design method by merely re-

ducing the restrainer gap or by taking other similar measures because such modification would not address the fundamental shortcoming of the method, which is the computation of the relative hinge displacements. It is apparent that an alternate design method that more accurately accounts for the nonlinearity of the elements needs to be developed.

Conclusions

1. In analysis and design of hinge restrainers it is necessary to consider the performance of the restrainer system and not merely the restrainers. The system includes (a) the connection between the restrainers and the superstructure, including any diaphragms, (b) the superstructure adjacent to the hinge, and (c) the restrainers.

2. The weak link in the restrainer system in bridges with narrow hinge seats needs to be the superstructure, because yielding of the restrainers or the failure of the connections could lead to collapse. In bridges with wide hinge seats, by allowing the restrainers to experience limited yielding, the integrity of the bridge can still be maintained. A minimum level of strain hardening would be required for the restrainers.

3. The Loma Prieta earthquake activated the hinge restrainers in the majority of the bridges investigated in the present study. Except for a few instances, the restrainers and their supporting systems performed well.

4. The most critical case for restrainer design corresponds to the condition when the restrainer gap is zero, whereas the critical abutment forces during the earthquake may occur when the restrainer gap is maximum. As a result, in a refined analysis both conditions would need to be considered.

ACKNOWLEDGMENTS

The study presented in this paper was part of a project funded by Caltrans, the National Science Foundation, and the Nevada Department of Transportation. S. Chi Liu, Jim Roberts, Jim Gates, Mark Yashinsky, Floyd Marcucci, and Richard Obisanya are thanked for their support and comments. Other members of the project team at the University of Nevada, Reno, Saber Abdel-Ghaffar and Dan O'Connor, provided valuable input.

A shortened version of this article was published in the proceedings of the Fifth U.S. Conference on Earthquake Engineering held in Chicago, Illinois, in July 1994.

REFERENCES

1. Jennings, P. C. *Engineering Features of the San Fernando Earthquake of February 9, 1971*. Report EERL 71-02. California Institute of Technology, Pasadena, 1971.
2. Gates, J. H. Seismic Resistant Bridge Design in California. *Proc., U.S.-Japan Conference on Seismic Research for Highway Bridges*, Department of Civil Engineering, University of Pittsburgh, Pittsburgh, Pa. 1984, pp. 1–14.
3. Yashinsky, M. Performance of Retrofit Measures on Existing Older Bridges. *Proc., Structural Engineers Association of California Meeting*, Lake Tahoe, Nev. 1990.
4. Housner, G. W. *Competing Against Time*. A Report to Governor George Deukmejian from the Governor's Board of Inquiry on the 1989 Loma Prieta Earthquake, Office of Planning and Research, State of California, Sacramento, 1990.
5. Saiidi, M. Current Bridge Seismic Retrofit Practice in the United States. *ACI Concrete International*, Vol. 14, 1992, pp. 64–67.
6. Saiidi, M., E. Maragakis, S. Abdel-Ghaffar, S. Feng, and D. O'Connor. *Response of Bridge Hinge Restrainers During Earthquakes—Field Performance, Analysis, and Design*. Report CCEER-93-6. Civil Engineering Department, University of Nevada, Reno, 1993.
7. *Seismic Design References (Bridge Design Aids and Memos to Designers)*. Division of Structures, Department of Transportation, State of California, Sacramento, 1990.
8. American Concrete Institute Committee 318. *Building Code Requirements for Reinforced Concrete and Commentary*. American Concrete Institute, Detroit, Mich. 1989.
9. Todd, D., N. Carino, R. Chung, H. Lew, A. Taylor, W. Walton, J. Cooper, and R. Nimis. *1994 Northridge Earthquake—Performance of Structures, Lifelines, and Fire Protection Systems*. NIST Special Publication 862. U.S. Department of Commerce, 1994.