Precast Arches as Innovative Alternative to Short-Span Bridges

Pierre Segrestin, *Terre Armee Internationale, France*
William J. Brockbank, *Reinforced Earth Company Ltd., Canada*

As the transportation infrastructure ages in many countries around the world, there is a growing number of bridges that are structurally deficient or functionally obsolete and require either major repair or replacement. There are estimated to be hundreds of thousands of bridges in this condition in North America alone. A cost-effective option for replacement of bridges with short spans (from 10 to 20 m) is the construction of a precast arch. The growing popularity of the precast arch can be attributed to its combination of the age-old structural efficiency of the arch shape and the modern-day cost-effectiveness of precasting. Rapid construction of approximately 15 m of arch per day keeps erection costs low. Not only is the construction cost-effective, but it also can be accomplished without disturbance to the stream, road, or rail it crosses. With no bearings or expansion joints, a precast arch will function for its entire service life virtually maintenance free. Construction is carried out in three basic operations: preparation of footing, erection of precast elements, and finally the simultaneous placement of backfill and end walls. The precasting is made economical with simple repetitive casting and stripping cycles utilizing high-production steel forms.

This paper was written to provide an understanding of precast arches, including design, precasting, and construction. It starts by comparing precast arches with short-span bridges in several ways and points out the advantages that a precast arch may have over a short-span bridge. The paper is written on the basis of the authors' knowledge of the TechSpan arch, which is designed and supplied by Reinforced Earth Company, Inc. (Terre Armee International). Because of this most of the detailed information is specific to the TechSpan precast arch. This, however, does not detract from the ability to point out comparisons between bridges and precast arches in general. No quantitative cost comparisons have been given since they are extremely project specific and are best left for the reader to do with a given project in mind.

Although the precast arch is already quite popular in Europe, it is still in an early stage of acceptance in other countries around the world. This point is clearly shown by the number of TechSpan installations to date, which total more than 300 in Europe but which total only 20 in Australia, Canada, Japan, United States, and Venezuela combined.

Comparison of Precast Arches and Short-Span Bridges

Advantages of Precast Arches

The main advantage of the precast arch is the high speed at which it can be constructed. Three basic operations are required to complete an installation: (a) site preparation and footing construction, (b) erection of the

arch, and (c) backfilling. The first and third operations are basic construction practices that can be performed by even the most unspecialized of contractors, and the construction rates for these operations are predictable. The only operation whose construction rate is not commonly known is the erection of the arch itself. Experience has shown that this operation is in fact the quickest of all three and is usually accomplished in 1 week or less, yielding average construction rates of 15 m/day or more.

Since the arch has no bearings or expansion joints, long-term maintenance requirements are low. The only item requiring maintenance is the concrete itself. Since the concrete of the arch is cast in a controlled precast plant, its quality will be inherently better than that of cast-in-place concrete, which often is poured during extreme weather or on a hurried schedule. The use of a steel form also produces a smoother and more durable surface than use of a temporary form, which is often made of wood.

Reduced use of these items that require long-term maintenance is being considered more often by highway departments as they focus their efforts on selecting structures with the lowest life cycle cost rather than structures with the lowest capital cost.

In regions where freezing temperatures occur in winter, precast arches have two advantages. The first is the reduction of the icing potential that occurs on bridges during rapid drops in temperature. The earth cover over the arch not only insulates against the freezing air underneath but it also acts as a source of heat to slow the freezing process. The second advantage for locations with freezing temperatures is a reduced level of exposure to deicing chemicals or salts used above the structure. Salts that lay in solution on bridge decks attack the concrete, but they have a much more difficult time reaching the arch because they will be diverted and diffused by the soil cover. If a salt solution eventually reaches the arch, it will be drawn by gravity around the outside of the arch and down to the drainage system.

Arches also perform well during earthquakes. With the memories of both the Loma Prieta and Northridge earthquakes in California still fresh in the minds of civil engineers, much attention is being paid to using more earthquake-resistant designs for bridges. The evidence to date in California has been excellent for the performance of what the California Department of Transportation categorizes as "buried structures." In fact state-of-the-art design code ATC-6, which has recently been adopted by AASHTO, does not require that any specific seismic design be considered on such structures because they do not appear to be susceptible to earthquakes (*1*).

This opinion was supported by a study conducted at the University of British Columbia under the direction of Peter Byrne on a TechSpan arch constructed in Vancouver, British Columbia, Canada, in 1990 (*2*).

One of the situations in which an arch has an obvious cost advantage over a bridge is in the case of a short span and a high grade separation. In this case the question is not whether to use an arch or a bridge but rather what length the arch should be. By "daylighting" the arch tunnel just beyond the shoulder of the upper road, the cost of the arch and the volume of backfill are both reduced. This reduced cost is offset by the requirement for higher end walls, however. By running several cost comparisons for various arch lengths, the optimum arch length can be selected for a given project.

A precast arch can be built without disturbance to the service that it is spanning. Examples of this include numerous installations in Europe in which rail lines were kept open with several trains per day; a twin arch conveyor underpass in Fort McMurrary, Alberta, Canada; and river crossings such as the one shown in Figure 1 on the Illecillewaet River, British Columbia, Canada.

For applications in which the underpass is on a shallow grade, an arch can be sloped to match this grade. On the other hand a bridge would have to be designed for the point of minimum clearance at the uphill end of the underpass, thus resulting in an extra height of the abutment at the downhill end.

Advantages of Short-Span Bridges

An advantage of a bridge over a precast arch is that the bridge can span greater distances. For practical reasons the range of the market for precast arches is under about 20 m of span, that is, in the category of bridges with very short spans.

A second advantage of a bridge is that the depth between the upper road surface and the top of the clear-

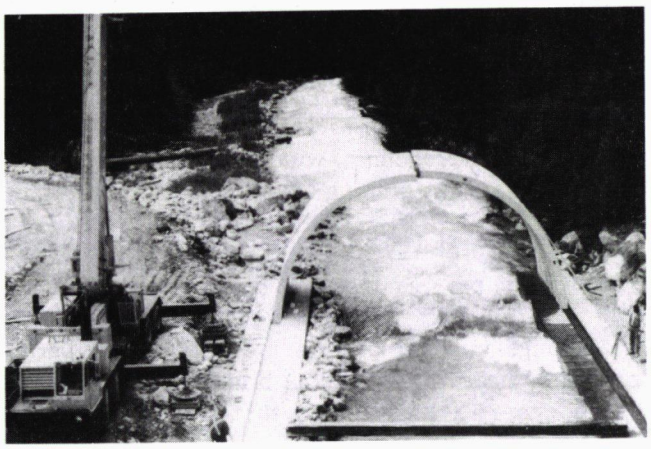

FIGURE 1 Precast arch construction over a river.

ance box for the underpass road can often be less than what is required for an arch. The reason for this is that an arch must account for (a) 1-m recommended earth cover over the arch, (b) the thickness of the arch, and (c) the amount of curvature of the arch above the top of the clearance box. When all three dimensions are added together the clearance for an arch is usually slightly greater than the depth of the girders plus the deck. This situation can be improved, however, if the arch is allowed to cut off the corners of the underpass clearance box.

General Design Characteristics

Other items that do not appear to be advantages for either structure type but that affect design are

- Application to very high skews; both types of structures must be extended to accommodate the skew.
- Application to curves of an underpass; both types of structures can accommodate curves with large radii. For curves with smaller radii it is preferred to construct the arch straight and increase the span to allow for the offset between the centerline of the arch and the centerline of the clearance box.
- Application on poor foundation; both types of structures will require foundation improvements or a deep foundation. A possible exception is if the bridge is built on mechanically stabilized earth.
- Requirements for select backfill; both types of structures require roughly the same quantity of clean granular backfill within a drainage zone behind an arch or cast-in-place abutment wall.

Construction of Precast Arches

By using a simple repetitive procedure contractors are able to achieve average production rates of between 10 and 20 lineal meters per 8-hr shift with the TechSpan arch. The range in production rates is due to variations in site access and the sizes of elements. This section describes the basic construction procedure for TechSpan arches, from the casting of the footing to the erection of elements and, finally, the placement of backfill and the concurrent construction of the head wall and wing wall. The basic components of a TechSpan arch are shown in Figure 2.

Footing

The first item constructed is the footing. After inspection of the foundation by a geotechnical engineer the footing is cast on either competent native material or structural fill. The footing is constructed to conform to the grade requirements of the arch. Tolerances for the width and thickness of the footing are in accordance with standard construction practices for footings, but tolerances for the recess that the arch sits in must be tighter to ensure good alignment and rapid erection. The recess is usually designed to be 100 mm wider than the thickness of the arch so that it can accommodate wood wedging for aligning of the elements.

Installation of Arch Elements

The crew and equipment needed to install the arch generally consist of three laborers, one crane and one crane

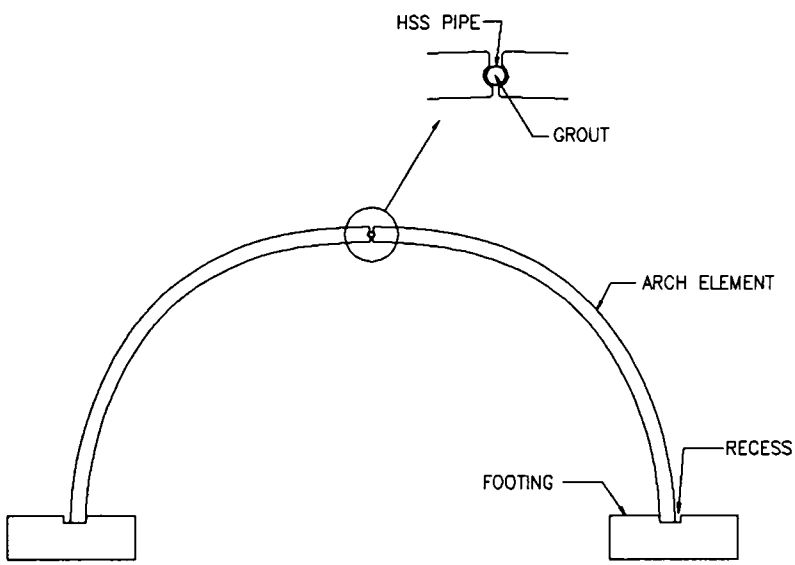

FIGURE 2 Typical cross section of an arch.

operator, and one foreman. A second crane is needed to erect the first two pieces and remains on site to position the first four pieces. Once the elements arrive on site they either can be installed on the same day or can be stored in a designated area until they are needed. The best means of production is accomplished when the elements can be transported directly to the leading edge of the arch and then off-loaded and immediately installed. If stockpiling is required, a front-end loader can be used to carry the elements from the stockpile to the leading edge of the arch. The crown pipe is bolted to the top of each element just before the crane lifts it. This pipe is used to provide a temporary gap at the crown that will be filled with a 40-MPa grout to provide uniform bearing to transfer axial forces from one element to another. Four cables complete with rolling blocks attached to the backface of the elements are used to give good control during the lift. Appropriate cable lengths are selected so that each element will need to rotate only slightly once it has been inserted in the footing recess.

The staggered installation pattern used is shown in Figure 3. This has the advantage of requiring only one crane, as opposed to the two cranes that would be necessary if opposing elements were in line with each other. Once all elements have been erected, including half panels on each end, the crown and footing recess are grouted. The last item to be installed is a membrane that covers all exterior joints. This membrane is usually self-adhesive for ease of installation. On some projects the project's owner may require that the entire outside surface be covered with a membrane and protective board; however, this is usually not necessary, and in fact on some stream crossing projects only a geotextile across the joints has been used.

Backfilling

The backfill placed around the arch is of two types. Fill placed nearest to the arch (in about the first meter from the outside of the arch) is a clean granular backfill. This is to allow free drainage of any water. Beyond this small zone any material suitable for embankment construction (as defined by most highway departments) can be used. Compaction requirements are (a) that the first 400 mm not be compacted; (b) that the next 600 mm be compacted to 95 percent of the standard proctor density with light (walk-behind) equipment; (c) beyond that large compactors can be used to achieve the same 95 percent requirement.

Collar Walls and Wing Walls

Many types of retaining walls can be used at the ends of a precast arch. The system most often used with the TechSpan arch is a reinforced earth wall.

The facing of the collar wall is constructed of either precast concrete panels or a temporary wire facing, which is in turn covered with cast-in-place concrete. The placement of backfill for the walls and the arch is done simultaneously.

Precasting of Arches

Precasting operations will vary depending on the type of system or manufacturer, but several items are common to all operations. As with all precasting it is the efficiency achieved through repetitive operations that

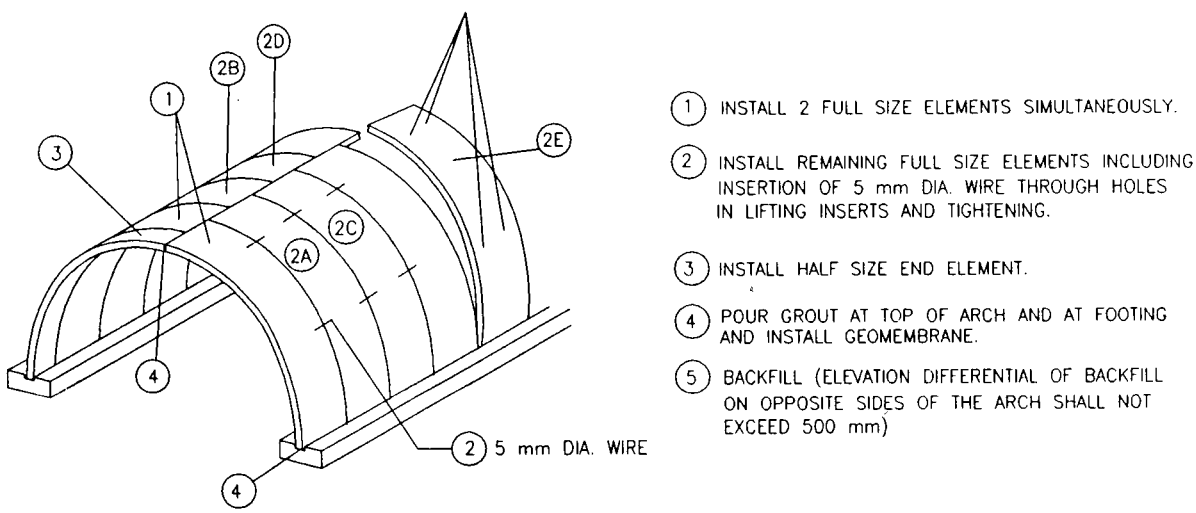

FIGURE 3 Suggested construction procedure.

makes precasting economical. The forms that are used play a key role in this operation because they must be able to be used easily and quickly and must be durable to withstand hundreds of casting and stripping cycles.

The following describes briefly the setup operation of the TechSpan system.

A steel base plate on which the elements are cast is set up, ensuring that the plate is sufficiently supported to avoid excessive bending under the weight of the forms and concrete (alternately, a concrete slab can be used). A plywood template cut to the exact shape of the arch is then secured to the base plate.

The forms are made from the three basic components of flexible skin, adjustable-length screws (to change the curvature of the skin), and a fixed steel frame. The skins are then bent to conform to the shape of the template by slowly turning the adjustment screws. With the forms now in position it is necessary to fabricate the reinforcing steel cage. The longitudinal bars are radially bent nearly to the shape of the arch and are tied to the stirrups with the assistance of a jig.

Once the reinforcement is given appropriate cover with plastic chairs, lifting anchors are secured and the top and bottom bulkheads are positioned. After this the element is cast. Quality control checks should be done on the resulting elements, including thickness at the top, bottom, and middle; internal cord lengths for cords on both sides; and lengths of both internal diagonal cords.

A dimensional record should be kept for each element including the form number from which it was cast so that any minor differences can be traced back to the source.

After each casting the forms are cleaned and new release oil is applied. One casting is done per day; therefore, the number of forms in production will govern the number of casting days to complete a project. Only 18 hr of curing before form stripping and lifting of the element is required because all early lifts on the elements are done while the element is on its edge, a position in which it acts as a very stiff beam supporting its own weight.

Analysis

Theory of Arches

The development of the arch was probably the most significant event in the history of structural design. It allowed people to support a load yet still have an open area beneath the load. For many years this was the only structural tool that could be used by people, and it was used in all buildings to span windows and doorways and as a three-dimensional arch (or, more properly named, a dome) to span interior rooms. At this same time similar principles were being used to create spans for roadway bridges in the form of the stone arches shown in Figure 4. Figure 4 illustrates how a vertical load can be converted to a compression force simply through the shape of the arch, and stone, brick or concrete can take compression loads very well. How is it, however, that arches are capable of working such magic? The answer is best illustrated not by looking at compression structures but by looking at tension structures and something called a funicular curve. The word *funicular* is defined by the dictionary as "of a rope or its tension." Since rope cannot support compression or bending loads it takes all of its load in tension, as shown in the first three cases in Figure 5. Of particular interest to arches is Case 3, which shows a rope supporting both vertical and horizontal loads all in tension. If the shape from Case 3 is inverted while maintaining its exact shape and if the exact vertical and horizontal forces were applied to the same points to which they were applied in Case 3, this new structure would support its load completely in compression (Case 4). This loading shown in Case 4 is the type of load that an arch in soil is required to support, that is, primarily vertical loads with some horizontal loads.

This simple example gives some insight into why an arch is structurally efficient.

Numerical Analysis

Because it is necessary to consider the relative stiffness between the soil and arch, this is best done with the assistance of some numerical analysis. The idea of relative stiffness can best be illustrated by Figure 6, in which a very flexible and a very stiff arch are shown side by side. The flexible arch avoids load by deforming, causing the soil to take the load by "arching." The stiff arch, on the other hand, not only supports the soil above it but also attacks the load from the adjacent soil settling around it.

Most finite-element methods (FEM) programs use a series of beam elements to model an arch, but the

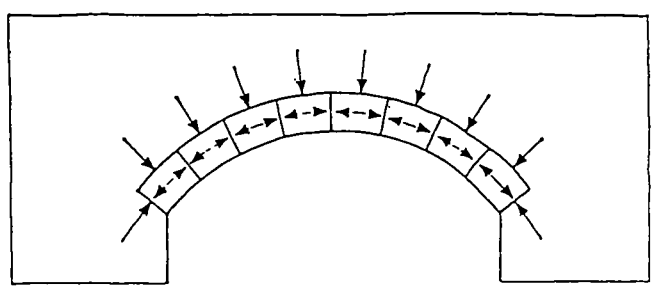

FIGURE 4 Simple stone arch in compression.

BOPRE program developed by Terre Armee Internationale defines the arch as a separate material with the properties of concrete and the actual thickness of the arch. A FEM mesh is generated (Figure 7) on the basis of the best arch shape, as chosen by an algorithm written with criteria for minimizing the total cost of the arch.

Materials

Six different materials are analyzed by the program:

- Concrete arch,
- Foundation soil,
- General backfill around the arch,
- Backfill immediately surrounding the arch,
- Soil-concrete contact elements, and
- Hinge elements (at the footing and crown).

The material characteristics of the three main materials are as follows.

Concrete

The concrete of the arch is assumed to behave entirely elastically and is defined by three basic parameters: Young's modulus, Poisson's ratio, and unit weight. The values of the three parameters usually used are 20,000 MPa and 0.2 and 25 kN/m^3, respectively.

Foundation Soil

The same three parameters are used to define the foundation soil, but the additional properties of cohesion, friction angle, and dilatancy angle are added. These parameters can be varied from project to project to help model the actual conditions of the foundation. In fact, different materials can even be used under the footings; for example, on one project it was necessary to define the foundation material as concrete for the zone immediately beneath the footing to simulate a concrete caisson foundation.

Backfill

By far the most complicated material to model is the backfill around the arch. This is understandable since it is constructed by incremental lifts with compaction. It is also this material surrounding the arch that has the greatest effect not only on the loading of the arch but also on the lateral support of the arch, and because of this the more detailed modeling of this material is justified. To best model this material the relationship defined by Duncan et al. (*3*) is used.

BOPRE Program

The BOPRE program is a nonlinear elasto-plastic program with the ability to incorporate strain hardening of the backfill. It has been found that the strain hardening changes the results very little, so it is routinely eliminated, making the stress path purely elastic at first and then purely plastic after the yield point.

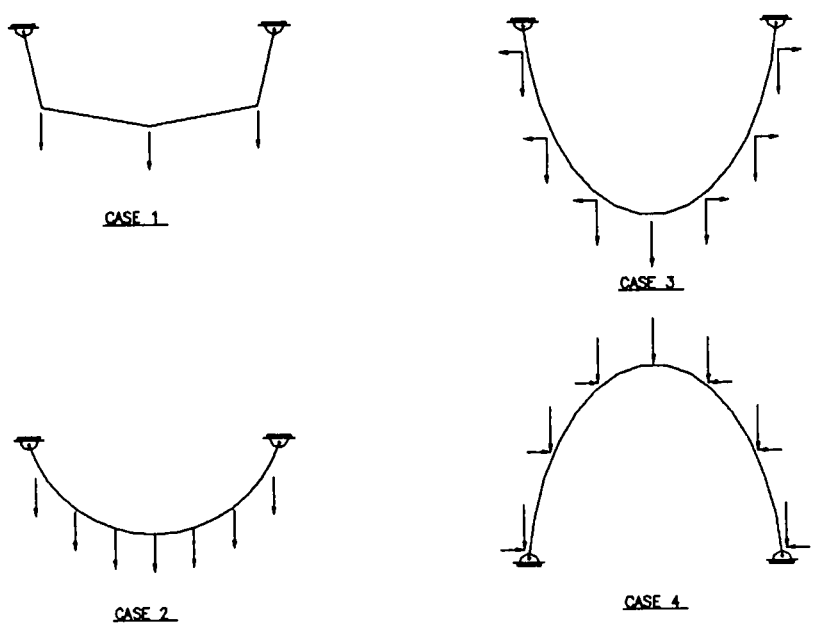

FIGURE 5 Funicular curves.

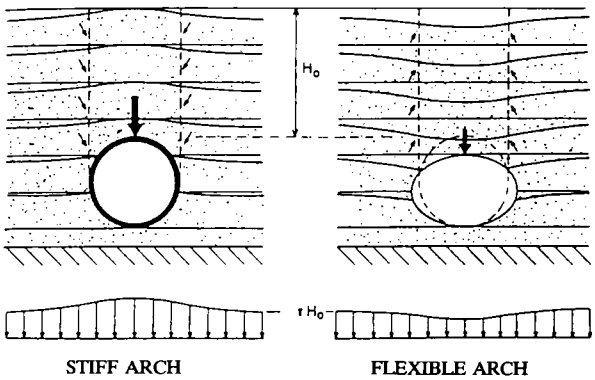

FIGURE 6 Soil-arch interaction.

The method used for solving the nonlinear stiffness matrices is the visco-plastic method, which is based directly on the initial strain method.

The BOPRE program goes through many steps before the final loading condition is reached (Figure 8). The first step is for the arch alone with no backfill. Subsequent steps apply approximately 2 m of fill at a time, alternating from one side of the arch to the other until the fill has reached the crown. From this point on the layers of fill are placed simultaneously on both sides until the final grade is reached. The last step is the application of a uniform surcharge, which is applied on only one side of the arch because this gives a more critical loading than application on both sides.

To simulate a compaction effort and the corresponding strains that result, each step contains three load increments. The first is the application of the thickness of backfill. The second is the application of a 10-kPa surcharge (to simulate compaction). The third is the application of a negative 10-kPa surcharge (to simulate the removal of the compaction equipment). During this

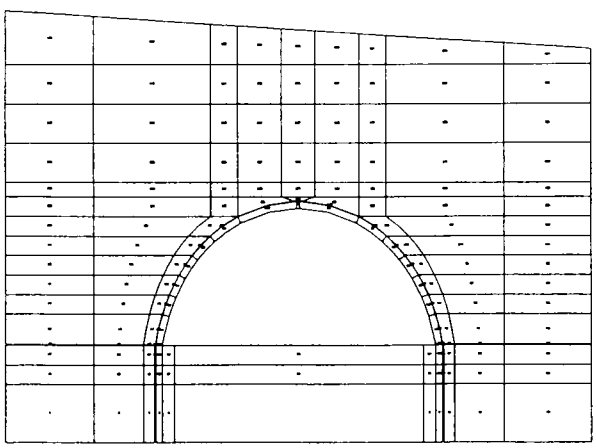

FIGURE 7 Finite-element mesh.

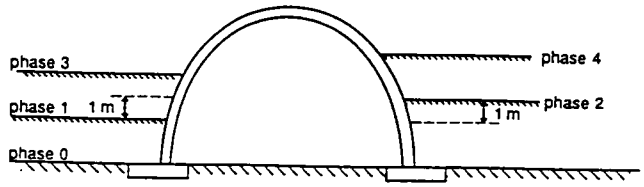

FIGURE 8 Alternative loading.

last increment any elastic strains that occurred in the second increment will be removed, but the plastic strains will remain. This is in agreement with intuitive knowledge of the behavior of soil during compaction.

Soil-Arch Interaction Summary

After analysis of many different projects a few trends are evident. Although the deformations of the arch are very small, the FEM program indicates that the arch is slightly pushed from side to side with the application of the asymmetric backfill lifts, but this movement is generally less than 10 mm. The crown of the arch rises slightly as the sides are squeezed in during the backfilling below the crown. As backfill is placed above the crown, the crown is forced down again, although not as far down as its initial starting position. This movement of the crown was substantiated by survey monitoring performed by Syncrude Canada Ltd. on their Twin Arch Conveyor Underpass (*4*), in which the initial maximum movement of the crown was approximately 30 mm.

On many projects the stress on the outside of the arch is in excess of the soil's unit weight times the overburden height, indicating that the arch is acting like a hard point, with the softer backfill settling around it, which is behavior opposite that of corrugated steel pipe arches. On such projects the arch is more flexible than the soil in the horizontal direction but is stiffer than the soil in the vertical direction. This pattern is dependent on the geometry of the arch and, in particular, on the stiffness of the foundation soils and backfill.

Structural Design of Foundation System

Several types of acceptable foundations support an arch structure. In general, depending on foundation soil conditions, the span, the function of the structure, and many other factors, a certain type of support system will be selected. Some of the options include

1. Continuous strip footings with or without pedestals,

2. A full-width, continuous reinforced concrete slab, with or without pedestals,
3. Continuous grade beams supported on reinforced concrete caissons or drilled shafts, and
4. Continuous reinforced concrete pile caps supported on driven H-piling.

The most common foundation system is continuous strip footing with or without pedestals.

The decision of whether to use a pedestal depends on the required headroom (or crown height) required for a given span. If a lot of headroom is required, such as for a train rail application, then pedestals on top of the footings will be used to raise the crown of the arch. The structural design of the strip footings is conventional except that significant overburden pressure is present on the top of the footing on the outside of the arch. The footing is sized so that less than the allowable bearing pressure for the foundation soils can be applied. The FEM results provide the reactions for the arch elements, the applied bearing pressure beneath the footing, and the applied overburden pressure on top of the footings. By using these data the design of the footing reinforcement is straightforward.

Structural Design of TechSpan Elements

The structural design of the arch elements must consider all of the stresses to which the element will be subjected, including stripping and handling in the precast yard, shipping and transportation to the project site, all of the conditions of erection and backfilling, and the final loading conditions in service.

The arch elements need to be designed or checked both as a bending beam and as a column, subject to combined bending and axial load. All of the loading conditions outlined earlier need to be considered and tabulated in a summary table so that the most severe combinations of conditions can be used to design the concrete reinforcement. In general, the arch elements are designed for the maximum moment that cause tension on the inside and outside faces. The arch is then checked as an eccentrically loaded column by using moment interaction diagrams to check that the elements are adequate for the applied axial loads. The arch elements are also designed for the maximum shear forces, although these are generally small.

As with most concrete designs there is the traditional trade-off between a thinner section that is highly reinforced or a thicker section that has less reinforcement.

ACKNOWLEDGMENTS

The authors thank the many employees of the Terre Armee Internationale group of companies for their work in the development of the TechSpan precast arch and in particular Santiago Muelas of the Spanish Terre Armee Internationale company.

REFERENCES

1. *ATC-6 Seismic Design Guidelines for Highways Bridges.* FHWA, U.S. Department of Transportation, Oct. 1981.
2. Anderson, D. L., P. M. Bryne, and T. Srithar. *Seismic Analysis of TechSpan Soil-Arch Structure Cassiar Connector Project, Vancouver, British Columbia.* British Columbia Ministry of Transportation, Victoria, July 23, 1990.
3. Duncan, J. M., P. Byrne, K. Wong, and P. Mabry. *Strength, Stress-Strain and Bulk Modulus Parameters for Finite Element Analysis of Stresses and Movements in Soil Masses.* Report UCB/GT/80-01. Department of Civil Engineering, University of California, Berkeley, Aug. 1980.
4. Brockbank, B., R. Dunphy, and L. Yasinko. Innovative Underpass for Highway 63, Syncrude, Alberta. *Proc., International Road Federation Conference and Exposition,* Vol. 9. Transportation Association of Canada, Ottawa, Ontario, Canada, July 1994.