Preliminary Analysis of Road Loading Mechanics

G. J. FABIAN, Principal Engineer;
D. C. CLARK, Associate Research Engineer; and
C. H. HUTCHINSON, Head, Engineering Section,
Cornell Aeronautical Laboratory, Inc.
Vehicle Dynamics Department, Buffalo, N. Y.

A program for the development of a dynamic theory of road-vehicle systems is outlined. An analysis is presented of the basic problems involved in the development of a comprehensive treatment of road loading mechanics. The complete road loading system is defined and its various component elements are discussed. The development of a simple but realistic mathematical model of the vehicle as the road loading element is accomplished. The model is subjected to various stylized road inputs on an analog computer and the resultant steady-state responses are determined. The significance of the model response to certain inputs is discussed and conclusions and recommendations are drawn from the complete study.

RESEARCH IN ROAD LOADING MECHANICS

●THE INCREASING USE of highway transportation and the expanding highway system emphasize the importance of a thorough knowledge of those factors contributing to highway wear and deterioration. Although it has been customary to study road life through the medium of the classic road test, an increasing body of evidence suggests that the extrapolation of the road test results and a more fundamental understanding of the highway may be facilitated by a system type of analysis, properly relating all of the dynamic as well as static performance factors.

In August 1958 a conference was held at the Bureau of Public Roads for the purpose of discussing a basic research approach to the problem of highway life, with particular emphasis on the dynamic road loads produced by vehicles on highways and their interactions with the road profile. It was pointed out that among the many diverse and complex factors which affect highway performance, those physical effects characterized as "road loading mechanics" are among the more important because they bear directly upon road life, vehicle life, driver fatigue, cargo damage and vehicle handling capabilities. It was generally concluded that a real need exists for the long-range development of a dynamic theory, adequately substantiated by experiment, which would permit the prediction of road life from the characteristics of the traffic flow and which would also point up the effect on road life of changes in vehicles suspensions and parameters that determine road response dynamics. It was also felt that the availability of modern statistical analysis methods, dynamic instrumentation techniques and modern computing equipment would facilitate such an effort and argued well for its initiation.

A further conclusion of the conference was that the most productive approach would involve a "system concept" attack that presumes a coordinated effort on the part of many groups; notably those of government, highway constructors and the automotive industry. All are concerned with important components of the system, and optimum results will only be obtained by related and compatible modifications in these components. Although it is thus readily imaginable that an ultimate approach should be directed and financed jointly, it was also believed desirable to initiate certain efforts immediately.

As the result of this conference, Cornell Aeronautical Laboratory prepared the following outline of a comprehensive program.

PROGRAM OUTLINE

The general program is conceived as one leading to a broad and basic understanding of the transportation system as a whole. The program comprises several phases forming a logical sequence of development and, were it to be pursued, its completion would constitute a scientific framework for the examination of many highway operational problems. It will be noted that the vehicle and highway are treated separately until developments are sufficiently complete to warrant joint analysis or application of the consolidated system equations.

Phase I. Analysis of Basis Problem

1. Literature Survey. A complete survey of literature (see references for examples) pertaining to basic road mechanics, analytical and experimental evaluation of suspension components (including tires), and investigation of vehicle ride performance would be made to establish what work has been done, the type and quantity of information available, and to map out the areas that require further research and development.
2. Preliminary Analysis. Existing analyses or new simplified analysis would be made to establish the form of the basic equations and to determine the range of the various system parameters and the magnitude of the loads produced by several classes of vehicles for typical road inputs.

Phase II. Complete Vehicle Equations

1. Analytical Development. Based on the work of Phase I, a more complete set of vehicle equations would be formulated. They would be analyzed to determine the significant parameters and form the basis for the program of experimental verification.
2. Experimental Verification. An experimental program would be conducted to verify the equations previously developed. First, the values of the system parameters would be evaluated and then actual full-scale tests performed for comparison with analytical predictions. Undoubtedly, some modification of the equations would be required, either to yield more accurate results or to produce a simpler set of equations.

Phase III. Road Equations of Motion

1. Preliminary Analysis. The first part of this phase would attempt to establish a simplified set of equations describing a road as a dynamic system. Included would be an extension of the literature survey made in Phase I.
2. Analytical Development. After the feasibility of such an analytical treatment has been established a more complete set of road equations would be formulated. These would embody all the important variables that affect road performance. An analysis would be made to determine significant parameters and relationships. This examination would lead to the development of an experimental verification program.
3. Experimental Verification. An experimental program would be conducted to verify the equations developed in Phase III-2. First, the values of the system parameters would be evaluated and then actual full-scale tests performed for comparison with analytical predictions. Undoubtedly, some modification of the equations would be required, either to yield more accurate results or to produce a simpler set of equations.

Phase IV. Application of System Equations

Here, specific computational and predictive tasks similar to those already outlined would be undertaken. Specifically, a comparative analysis of the dynamic road loading of various classes of vehicles would be made. This would determine the fundamental reasons for differences and show ways of making improvements in both roads and vehicles.

The Bureau of Public Roads contracted with Cornell Aeronautical Laboratory for a program which essentially comprised Phase I of this outline. This research has been completed and reported (67) and forms the basis of the present paper. Additional

Bureau of Public Roads support has been subsequently given for a similar treatment of Step 1 of Phase III, which is now being actively pursued at Cornell Aeronautical Laboratory.

SYSTEM DEFINITION

The road loading system is composed of two major elements; vehicles and the roads on which they travel. In general, the performance of each element is dependent upon the performance of both elements. Loads are applied to the road in several ways. First, there is the static load of the vehicles. Second, the road profile, through its contact with the vehicle tire, acts as a forcing function of dynamic load variations. Third, the variation of tire elasticity around the circumference produces variations in road load. All of these loads act on the highway to produce variations in deflection and stress. Thus, the tire contact area is the connection between the two sub-systems, each of which consists of several additional factors, as shown in Figure 1.

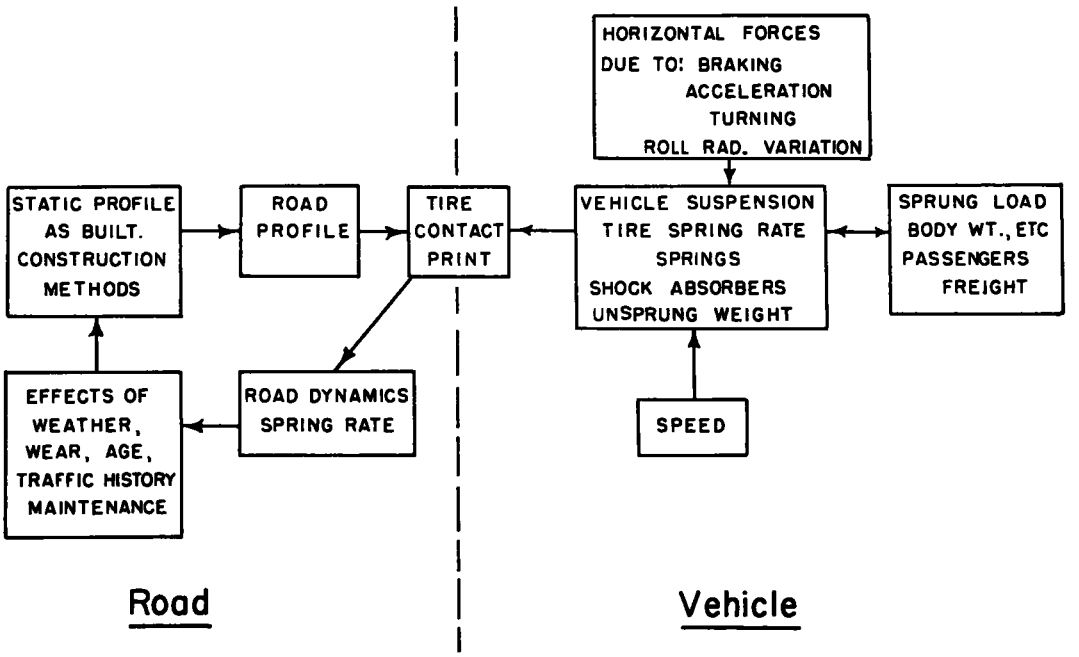

Figure 1. Road loading system.

The road profile presented to the vehicle tire is a function of its static profile as built and subsequently modified by the effects of weather, wear, age, traffic history, and maintenance, as well as the dynamics of the road as an elastically supported body. All these are in turn a function of the constructional details employed in building the highway. The type of surface, finishing methods, subgrade, subbase, and basement soil are all contributing factors. A definition of the loads applied at the tire contact print would allow investigation of this vehicle sub-system by itself. In its simplest form, the system contains one vehicle and one road model. The effects of numbers of vehicles and/or increased road theoretical complexity can be brought into the analysis by addition.

The vehicular system applies loads to the road through the tire contact print. Basically, the sprung mass of the vehicle compresses the suspension springs which load the unsprung mass, or axles, which in turn load the tires on the contact print. The sprung mass is composed of the chassis above the springs, the passengers, and the freight or luggage carried. Any change in the deflection of the elastic members is accompanied

by a variation of load, thus as the tire contact print goes up and down over the road profile, the load applied to the road is varied. There is also a horizontal load applied to the road surface due to transient motions such as acceleration or braking, a side force resulting from steering action initiated by the driver, or camber, or superelevation of the road, as well as loads in the fore and aft direction due to change in rolling radius of the tires as they move over the undulating road profile. And, finally, since this is an elastically supported system, the effect of frequency must be taken into account. The output forces applied by the vehicle to the road are frequency dependent. Like many dynamic systems, mechanical resonance occurs at certain frequencies, which magnifies the loads transmitted.

This, then, as shown in Figure 1, is the complete system. A change in any one of the elements will affect the rest. The load variation on the road is the response of the vehicular sub-system to the apparent profile; the apparent road profile is the cumulative result of those factors embodied in the road sub-system. The interaction of the various elements may be expressed mathematically if sufficient information about their operation is at hand. Either sub-system may be investigated individually from the tire contact print outward.

Nomenclature

The symbols used herein, listed here for ease of reference, are as follows:

a = distance from the front axle to the center of gravity, in in.;
b = distance from the rear axle to the center of gravity, in in.;
b_{c_1} = front axle Coulomb friction force, in lb;
b_{c_2} = rear axle Coulomb friction force, in lb;
C_{c_1} = front axle viscous damping constant, in lb sec/in.,
C_{c_2} = rear axle viscous damping constant, in lb sec/in.;
F_f = front tire dynamic road loading force, in lb;
F_{fs} = front tire static road load force, in lb;
$\left.\frac{F_{fm}}{F_{fs}}\right)_{ss}$ = front tire steady-state maximum dynamic road load force ratio;
F_r = rear tire dynamic road load force, in lb;
F_{rs} = rear tire static road load force, in lb;
$\left.\frac{F_{rm}}{F_{rs}}\right)_{ss}$ = rear tire steady-state maximum dynamic road load force ratio,
f = road input frequency ($f = u/\lambda$), in cps;
g = gravity acceleration (386 in./sec^2), in in./sec^2;
I = body pitch inertia about the center of gravity, in in. lb sec^2;
k_1 = front tire vertical stiffness, in lb/in.;
k_2 = rear tire vertical stiffness, in lb/in.;
k_{c_1} = front axle suspension spring rate, in lb/in.;
k_{c_2} = rear axle suspension spring rate, in lb/in.;
l = wheelbase length, in in.;
m_c = sprung mass, in lb sec^2/in.;
m_1 = front axle unsprung mass, in lb sec^2/in.;
m_2 = rear axle unsprung mass, in lb sec^2/in.;
N = integral number of road wavelengths contained between front and rear axles;
n = fractional portion of a wavelength contained between front and rear axles;

u = forward velocity, in in./sec;
λ = road wavelength, in in.;
θ = body pitch attitude angle, in deg;
τ = time delay between road input to front and rear tires, in sec;
$\delta(t)$ = absolute road input amplitude to front tires, in in.;
$\delta(t-T)$ = absolute road input amplitude to rear tires, in in.;
δ_m = peak-to-peak value of road input amplitude, in in.;
δ_1 = absolute front axle position, in in.;
δ_2 = absolute rear axle position, in in.; and
δ_3 = absolute body position measured at the center of gravity, in in.;

SYSTEM COMPONENTS

The elements of the two sub-systems, as defined, were investigated in an effort to mathematically define the relationships within the two sub-systems. It was not the aim of this initial program to completely define the road sub-system. However, it was mandatory that this area be investigated sufficiently to gain a knowledge of road profiles and their variation as a result of dynamic loading in order to achieve realistic apparent road profiles as inputs to the vehicular sub-system.

Road Elements

The term "road" as used in this study covers any paved highway intended for motor vehicle travel. The pavement can be either the rigid type as exemplified by portland cement concrete or the flexible type containing various thicknesses of bituminous material. Regardless of type, it is the subsoil which eventually carries the load. The surface and intermediate structure merely serve to transmit the load from the vehicle wheels into the ground. The characteristics of the surface material do, however, determine the manner in which this load is transferred. In order to estimate the seriousness of the pavement deflections due to load, and any consequent alterations of the profile, both types of pavement have been investigated.

A survey of current literature was made to obtain the data necessary for consideration of the road elements. Among those examined, References 2 through 21 seemed most pertinent. The magnitude and seriousness of flexible pavement deflections to be expected is shown to vary with pavement age, thickness, vehicle speed, temperature, and the dynamic properties of both the surface and the subgrade. The stress and deflection data for rigid pavements, as given in these references or determined by methods indicated in them, show variations, with a major dependence on the modulus of subgrade reaction.

This study of the present state of road system definition, although not exhaustive, has provided some new insight into, and understanding of, the road loading problem. It has indicated that static deflections of approximately 0.030 in. are to be expected and that dynamic deflections can be considerably larger. Dynamic deflections of the order of 0.050 in. can be accommodated without undue deterioration, but larger values will usually be accompanied by premature surface breakup. (Improper matching of vehicle and road, that is, close correspondence of their natural frequencies, can produce large deflections and premature failure.) Consequently, the assumption of the static road profile as the input to the tire, without admission of road relative motion, is a reasonable procedure for calculating dynamic force variations occurring in the tire print.

The study has also substantiated the belief that a fundamental analysis of the road as a dynamic structure (including all the various elements from the base soil upward to the tire print) should enable a clearer understanding and definition of the actions and reactions which take place within it. The hard top surface merely transmits the wheel loads via the intermediate courses to the base soil over which the road is build. All the strata contribute to the total action by virtue of their individual characteristics, but it is the base soil which ultimately must carry the load. The intermediate structure is the means of spreading out the load to an extent required to avoid failure in the sometimes varying basement soil.

Vehicle Elements

The components in the make-up of motor vehicles which are of interest in this respect are largely contained in the suspension system. Generally, they bear similar functional relationships to each other regardless of size. The body is assumed to have mass and to be rigid. Between it and the axles are the suspension springs and shock absorbers. The axles carry the brakes, wheels, steering mechanism, and tires, and thus have mass. The tires carry the axle over the road surface and transmit road loading forces from the vehicle to the road. These are the elements which must be related mathematically in order to define the vehicle motions and force variation in the tire print.

Tires are all quite similar. They sustain a load by virtue of their deflection. Although the vertical deflection of a given tire is a function of inflation pressure, and generally speaking the contact pressure is not dissimilar from the inflation pressure, the nominal deflection at rated load and pressure is very nearly 1 in. for all highway vehicle tires. According to the Tire and Rim Association (22) a 10.00 x 20 twelve-ply truck tire is rated at 4,500 lb. Its vertical spring rate is 4,500 lb per in. Although damping is required in the tread material for satisfactory gripping properties (23), the carcass mainly acts as a container for an air spring, with negligible damping. The assumption of no tire damping has been reached by a number of other investigators (24-30).

The unsprung weight of a vehicle usually includes the wheel brakes, axles, and some portion of the springs, as well as the tires. With independent suspensions, the picture changes somewhat due to a reduction in axle weight. References 31 through 37 discuss the variations involved. The typical commercial vehicle which carries 9,000 lb on the front axle and 18,000 lb on the rear (or 32,000 lb on the bogie) will undoubtedly have solid axles for some time to come. The weight of the unsprung masses will vary from 800 to 1,200 lb on the front, with a good percentage being close to 1,000 lb (500 lb per wheel). The rear axle and associated unsprung parts will weigh about double this, with a large group showing 2,000 lb on a single rear axle carrying dual tires (30).

The springs of a vehicle fall into several categories. Primarily, there are the conventional leaf springs, which are found on most commercial vehicles and many passenger car rear suspensions. Leaf springs can satisfy the three main requirements of the connection between the axle and vehicle frame; they allow relative motion between the two members and provide a source for energy storage, they maintain the axle position both fore and aft and sideways within reasonable limits, and last, but by no means least, they do both jobs relatively inexpensively. The next class of springs is the single-purpose type, which forms only the resilient member, the axle being constrained to move in a manner prescribed by various linkages which connect it to the chassis. References 30 and 38 through 45 discuss the details and effects of different designs. Spring rates, of course, vary with the design. The leaf springs for the commercial truck previously mentioned will have a rate of about 900 lb per in. on the front axle and 2,000 lb per in. on the rear. These values are largely dictated by the space available over the axles. The values chosen reflect a static deflection of 4½ in. on the front springs and 3½ in. on the rear under full load conditions. Although overload or helper springs may be employed, or the shackle tilted to increase the rate as deflection increases, the physical limitations are such that the design variation of the hypothetical 27,000-lb truck when fully loaded will not be great.

The remaining factor in a vehicle suspension is the damping in the system. This is made up of several things. Coulomb friction or static friction comes from parts rubbing together and always opposes motion. It is generally agreed that this type of damping is not desirable due to its often irrational action as well as the reduction of its effect near a resonant frequency. Shock absorbers, which provide some form of viscous damping, are usually applied to the front axle of trucks, and to both axles of passenger cars. They can be designed for different damping ratios, but about 20 percent critical damping is very effective and not too rigid. The inter-leaf spring friction has been estimated by Janeway (30) as a function of spring load and seems to be the same whether the vehicle is empty or fully loaded.

The characteristics of the different elements discussed were used directly in a mathematical model in order to predict the system outputs. After a model was chosen, the parameters were evaluated and the expressions were set into an analog computer, which solved for the response to different forcing inputs. This is described in the succeeding sections.

SYSTEM MODEL

Ideally, one can set up the equations of motion for the complete road system, including both the vehicle and road elements, specify the system constants, and solve for the output forces to the road. Practically, this is not now possible, as there remains considerable work to be done toward understanding and mathematically defining the action and restraints imposed by the different portions of the road in whatever manner it may have been constructed. However, a good background of information is available on the vehicle sub-system; its equations of motion may be evaluated. Others have handled this problem with a different degree of completeness and complexity and have achieved a remarkable degree of correlation between theory and test. References 24, 26 through 29, and 46 through 54 are a few of the reports on this type of work. The current analysis has been aimed at simulating a vehicle in a sufficiently realistic manner that external conditions may be related to it, and its application to any given road profile will reliably illustrate the forces occurring in the tire contact print. The forces which the vehicle applies to the road surface may thus be determined for a given road profile. As previously mentioned, the static profile very nearly represents that which the vehicle experiences. The output forces which result from the application of the static road profile to the model may then be used with the road sub-system representation, when it is available, to determine the effect of dynamic road loading on the road itself.

Choice of a Model

There are a large variety of vehicles currently using the highways. Although certain roads may have only a marginal life expectancy under passenger car traffic, the majority of highways were planned to carry both commerical vehicles and passenger cars. This means that a fair life span is anticipated under present-day commercial loads, but probably very long life would be obtained under just the lighter automobile loadings. Granted that in a fatigue life problem, a very large number of small-magnitude inputs will have an appreciable effect, the relative dynamic stress or deflection caused by a 1,000-lb loaded tire of an automobile is several times less than that of a pair of dual truck tires carrying 9,000 lb. Thus, any dynamic magnifying factors would have to be several times as great on the smaller vehicle to approach the same road stress. This is very improbable, because in many ways they are very similar vehicles, one a smaller version of the other. Consequently, it seems reasonable to assume one vehicle as the model; other vehicles may be represented by changes in the vehicle parameters; and the results may be interpreted in the light of these variations. In the present work, a heavy truck was chosen as the model. It also has the advantages of large load variations being available in both the real and simulated case.

The data included in the WASHO Road Test Report (2) indicate that the loading due to an 18,000-lb single axle is equivalent deflection-wise to that of a 32,000-lb tandem on flexible pavements. This is further attested by the multiple regression analysis (55). The conditions under both types of axles on a concrete road have been investigated after the method of Westergaard (9) utilizing Mohr's circle (56) for computing the combined stresses (67). Although the effect of the additional axle is to produce a greater total deflection as a result of the greater total load on the slab, the stress seems to be critical under the 18,000-lb single axle. The results of these investigations led to the choice of a single 18,000-lb rear axle for the model to be simulated. The front axle was chosen to have the same tire loads on the same 10.00 x 20 size tires. This determined the 27,000-lb gross vehicle weight.

It was decided to use conventional leaf springs on both the front and rear of the vehicle, because they predominate in units of this size. Initially, shock absorbers were considered only on the front axle, as this is also common usage, but subsequently viscous dampers were also applied to the rear suspension to illustrate their effect.

Interpretation of Results

The road sub-system must endure repetitive loading of many different magnitudes. Although the actual traffic distribution for any given road is peculiar to itself, and the changing times and conditions will alter it from year to year on a given highway, a loading or traffic count may be obtained at any given time. An average of these traffic counts for a series of highways in the same class may be obtained to compute a typical road loading. This is about the only approach available for an estimate of the operating load under which a pavement must survive unless actual A.D.T. (Average Daily Traffic) figures are available. The problem is somewhat simplified through the use of Miner's cumulative damage criterion (57) and a fatigue curve for the road material. According to Miner, the number of cycles or load applications at a given stress level represents a portion or fraction of the life of the material. This same portion or fraction is obtained at different stress levels if the number of cycles applied is in the same proportion to the total number of cycles to cause rupture of the material at this stress level. The fatigue curve of the material defines the number of cycles to cause rupture at any given stress level.

As noted by Fabian (67), the stresses under various wheel loads may be calculated. From these stresses and a fatigue curve of the pavement material, the number of cycles to cause failure may be computed for each wheel load. By applying Miner's cumulative damage criterion with the number of cycles to rupture, an equivalent number of 9,000-lb static wheel loads may be determined. A typical traffic volume and wheel load distribution indicated that the total A.D.T. loading due to all vehicles was equivalent to 518 wheel loads of 9,000 lb being run down the road, roughly two-thirds the number of commercial vehicles in the analysis.

This example has not been worked out with the detail used by Moore (21) or others, but it does illustrate the point that a traffic loading or distribution may be interpreted in the light of an equivalent loading of a given model. Of course, many simplifying assumptions were made here, such as assuming dynamic similarity of all vehicles, but the method is at least valid as a first approximation and enables a much broader application of the results of one model. The key to the evaluation is the fatigue curve, which will have to be substantiated over a broader range for general application of this method. It does show that with similar vehicles application of 100 9,000-lb wheel loads (on duals) is roughly equivalent to 20 loads of 11,000 lb, five of 13,000 lb, or slightly more than one of 15,000 lb.

An analog computer was used to solve the equations of motion representing a mathematical model of the response of the vehicle to road inputs. The analog computer solutions are the vertical road forces that the vehicle suspension system transmits in response to a given road profile and speed, and are expressed as a ratio of the peak to the static load. They provide a more realistic estimate of the forces actually being imposed on the road surface through the tire print, if the profile is realistic. With vertical road load force as an input, a better understanding of the resultant stresses and strains in the road structure may be gained. It must be remembered, however, that the dynamic force variations will be accompanied by similar changes in print area. The larger load is applied at approximately the same contact pressure over a larger area of road, due to increased ground contact area with larger vertical tire forces. Therefore, the stress computations used with the various road loads to indicate the seriousness or degree of damage must take this into account. The stresses indicated by Westergaard's method, as used in this work, are computed for one tire print area. An increase in load does not increase the stress proportionally unless the area over which the load acts remains constant. If contact area is roughly proportional to load, the data developed by Westergaard (9, Table 3) can be used to indicate the effect of load ratio on stress ratio. Suffice it to say that a load ratio of 4:1 will increase the bending stress under the tire on a given concrete road by about 3:1.

Model Development

For reasons of simplicity, the model has been designed to indicate only the vertical forces on the road surface. It did not seem advisable in this preliminary analysis to

try to account for the horizontal stresses due to acceleration, braking, cornering, or due to the mechanical design of the linkages which make up the suspension. They, like the thermal stresses in the pavement, are additive to those resulting from the vertical loads.

The problem is further simplified by the admission of only pitch and bounce degrees of freedom at steady-state speeds. Turning, rolling, and lateral translation are omitted. This seems a reasonable assumption, as it represents a majority of highway travel straight down a relatively flat road at constant speed. The excitation of the road profile merely causes vertical motion of the axles and consequently pitch and bounce of the vehicle.

The physical model chosen is a truck on 10.00 x 20 tires, singles front, duals rear. Because the vehicle is symmetrical about the vertical longitudinal plane, and because only motions in this plane are considered, only one-half of the vehicle need be used in the model. The front spring rate is 900 lb per in.; rear, 2,000 lb per in. The front unsprung weight (½ axle, one brake, wheel, tire, and spring) is 500 lb; the rear, 1,000 lb. The front sprung load is 4,000 lb and the rear 8,000, placing the center of gravity 96 in. aft of the front axle on this 144-in. wheel base rig. This vehicle is very similar to the CBE truck used as an example in Janeway's Truck Ride Analysis (30), from which some of the dynamic constants have been taken directly. A tire spring rate of 4,500 lb per in. per tire was assumed. Interleaf static or Coulomb friction is taken as 300 lb on the front axle, 400 lb on the rear, and viscous damping of approximately 20 percent critical was added as a shock absorber between the front axle and chassis frame. No shocks were used on the rear at first.

The geometry of the road is shown in an exaggerated view in Figure 2. The road profile is assumed to change elevation sinusoidally with distance along the road. Figure 3 shows a schematic diagram of the physical system from which the equations and the subsequent analog computer set-up were derived. The vertical displacement of the tire contact print as it follows the road profile $\delta(t)$ is taken as a function of time such that the rear tire print experiences the same displacement at the time $t + \tau$, where τ is the time required for the bump to traverse the wheel base at speed u. Thus, at the instant the front tire is at the displacement $\delta(t)$ the rear tire is traveling over the bump the front axle hit T seconds earlier, or $\delta(t-\tau)$. The analysis yields six equations with six unknowns, which can be solved simultaneously on an analog computer to determine the vertical forces in the tire prints, F_f and F_r, which are the result of the displacement of those prints by the road profile.

During the program, it was determined that two variations of the basic model should also be investigated. These are the unloaded vehicle weighing 8,400 lb and the fully loaded vehicle with shock absorbers contributing viscous damping to the rear suspension as well as the front.

The values of the various assumed truck parameters are given in Table 1. It is interesting to note that the bounce and pitch natural frequencies of the unloaded truck are in the range of human body resonance. This could be very uncomfortable, if not deleterious.

Road Inputs to the Vehicle

The actual vehicle traveling over the highway is subjected to many different types of bumps. The axle deflection magnitude depends on the amplitude of road roughness elements, the road wavelength, the suspension properties, and the forward speed of the axle. Without shocks, axle motion is a forced vibration with a highly peaked resonance, and there is enough random variation in surface profiles to offer excitation of approximately wheel hop natural frequency for almost any forward speed. A harmonic analysis of six road profiles recorded by Housel and Stokstad (61) was performed in an effort to locate any significant similarities or predominant wavelength contents. The effort proved futile, but it was observed that sections of the profiles could be closely approximated by simple wave functions of a sinusoidal, triangular, or square character for limited distances.

These simple wave forms were used as inputs to the computer, representing road profiles, and the frequency responses of the road forces to these three wave shapes were compared. There seemed to be little difference in the character of the results. There was a large magnification of the static load near the wheel hop frequency which attenuated symmetrically on either side. This led to the conclusion that the input wave form is not as important as frequency.

The harmonic analysis of road profiles had indicated that many different wavelengths are present with no definite pattern or content. The model response showed that the dynamic road load fluctuated at the wheel hop frequency relatively independent of input wave form. Consequently it was decided that the model response to simple sine waves was almost as meaningful and realistic as its response to most other inputs.

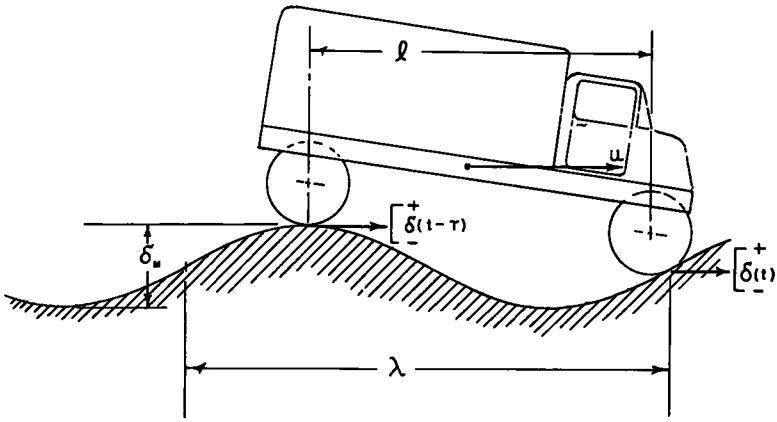

Figure 2. Sinusoidal road input.

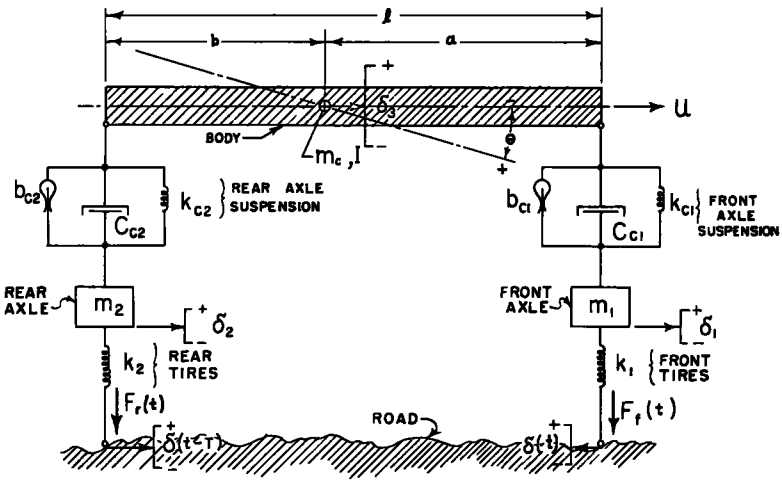

Figure 3. Mechanical analog of a truck.

It can be shown that the frequency response of a model which has a wheelbase equal to any fraction of a road wavelength is identical to that of the model having this same fraction of a wavelength plus any whole number of additional wavelengths contained between front and rear wheels. This is because the model senses only vertical displace-

TABLE 1

ASSUMED MODEL TRUCK PARAMETERS

Parameter	Truck Loaded	Truck Unloaded	Units
m_c	31.1	7.0	lb sec²/in.
m_1	1.30	1.30	lb sec²/in.
m_2	2.59	2.59	lb sec²/in.
k_{c_1}	900	900	lb/in.
k_{c_2}	2,000	2,000	lb/in.
k_1	4,500	4,500	lb/in.
k_2	9,000	9,000	lb/in.
C_{c_1}	100	100	lb sec/in.
C_{c_2}	0[a] 200[b]	0	lb sec/in.
b_{c_1}	300	300	lb
b_{c_2}	400	400	lb
I	87,000	28,700	in. lb sec²
a	96.0	53.3	in.
b	48	90.7	in.

[a]Without rear shock absorbers.
[b]With rear shock absorbers.

ment, which is a function of the distance along the wave. The same road input forcing frequency can be obtained for any wavelength by simply adjusting forward velocity. Consequently, the frequency response curves of Figures 5 through 10 apply to a large number of different wavelengths, and a complete picture may be gained from a relatively few frequency response curves.

The vertical amplitudes chosen were established to result in realistic road roughness. Waves of these magnitudes are not unusual. The total vertical amplitude per mile resulting from sine waves of ¼-, ½- and ¾- in. peak-to-peak amplitude is at least representative according to the road roughness figures of Moyer et al. (62, 63), Taylor (64), or the profiles which were harmonically analyzed (61).

Force Outputs to the Road

Figure 4 shows the form of the analog computer solutions obtained for steady-state response of the dynamic vertical road loading force to sinusoidal road displacement inputs. Although Figure 4 represents just one road displacement input amplitude at one value of frequency, several interesting conclusions can be deduced from it. The effect of rear shock absorbers in decreasing the peak dynamic

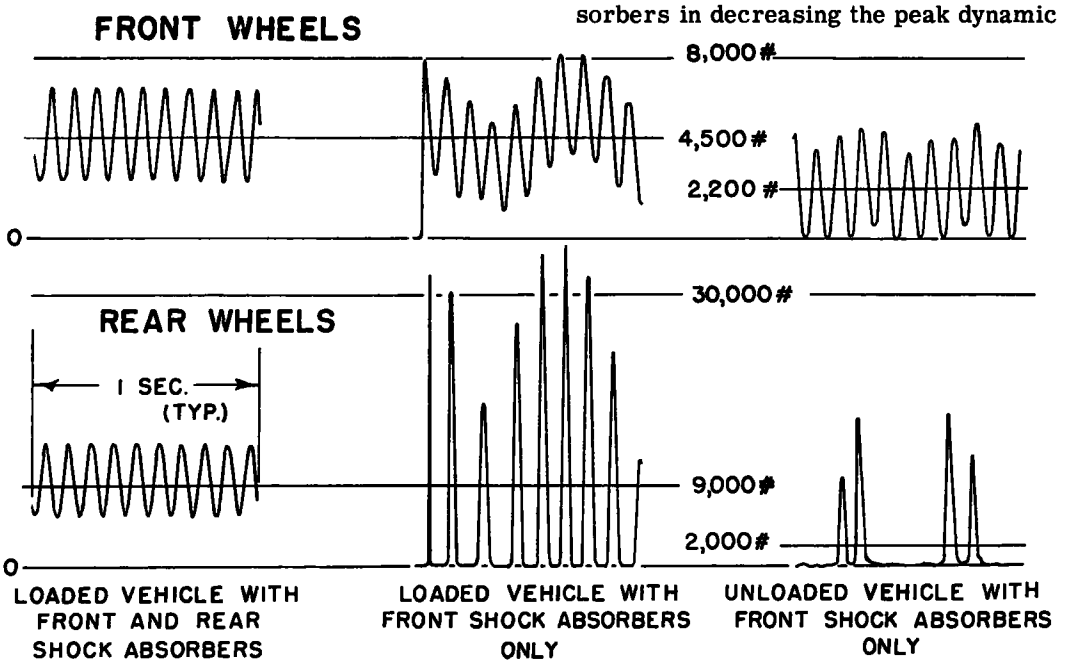

Figure 4. Truck time response to a sinusoidal road input; frequency 10 cps, amplitude 3/4 in. peak to peak.

road load forces is unmistakable in the left and center plots of Figure 4. With shock absorbers on all axles, the peak dynamic road load force under the rear tires is only 50 percent larger than the 9,000-lb static axle load. Without shock absorbers (all other things being equal) on the rear axle, the peak rear tire dynamic road load is more than 300 percent greater than the static axle load. It should be noted also that the tires actually leave the road every time the axle bounces. This condition is especially pronounced in the response of the unloaded truck to the same road displacement inputs. In this case, the peak-to-static rear axle road load force ratio is about 7.5 to 1 at wheel hop resonance (as shown in the right hand plot of Figure 4). The unloaded vehicle without shock absorbers exerts larger peak road loads under the rear tires than does the loaded vehicle with shock absorbers on all four wheels. Because road damage increases with some higher power of the stress amplitude (or road load force), the value of proper shock absorbers on all axles of even the largest vehicles in reducing cumulative road damage would seem apparent.

The ratio of the steady-state dynamic road load to the static load is plotted as a function of frequency (the ratio of road speed to road wavelength) in Figures 5 through 10. These plots represent both front and rear wheels for the loaded vehicle and road amplitudes of ¼, ½, and ¾ in. The use of the frequency parameter u/λ (speed/road wavelength) considerably extends the usefulness of the plots, since they can be applied to a multitude of speed and wavelength combinations, and it facilitates interpretation of the results. Plots for the unloaded vehicle (wheelbase of 12 ft) at a fundamental road wavelength of 24 ft are shown in Figures 9 and 10. The response of the fully loaded model with shock absorbers on both front and rear axles is shown in Figures 7 and 8. These plots all represent the dynamic loads which the vehicle imposes on the road.

The character of the standard loaded vehicle curves is not altered greatly by changes in wheelbase-to-wavelength ratio. Without rear axle shock absorbers, dynamic magnification factors of 2.9 or greater occur at the rear wheels at wheel hop natural frequency for a disturbance amplitude of ½ in. peak-to-peak. The peak amplitude ratio at wheel hop resonance is around 4 to 5 for a ¾-in. peak-to-peak input excursion and around 2½ to 3 for a ¼-in. peak-to-peak input amplitude. The significant factor is that at least twice the static load can readily be obtained over a fairly broad frequency range with moderate amplitude inputs. Most road profiles will excite the wheel hop mode to

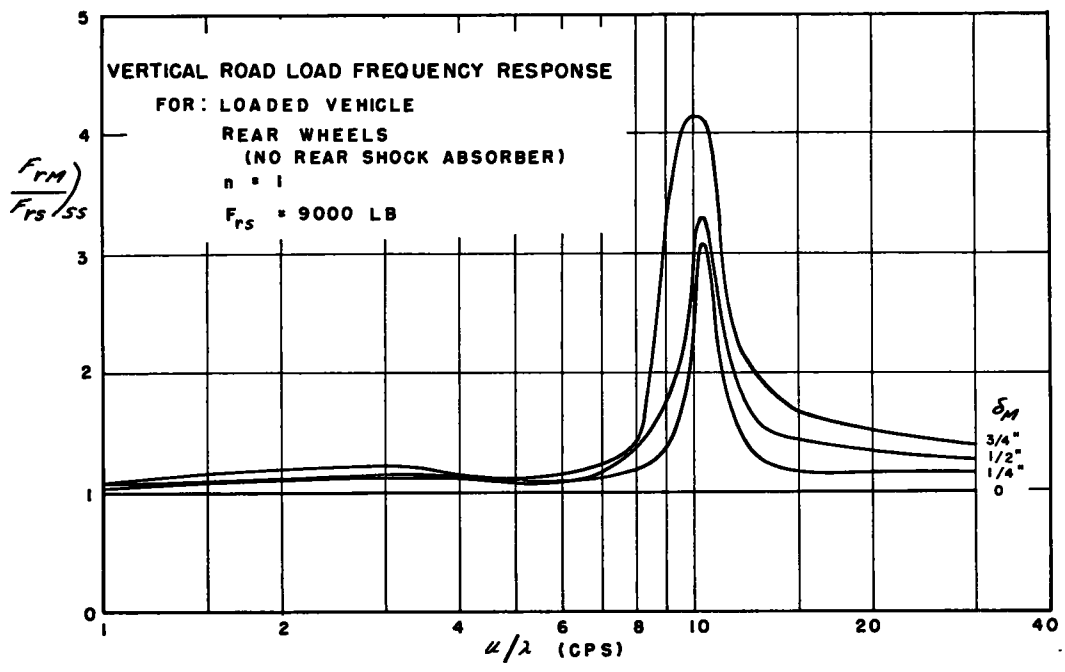

Figure 5.

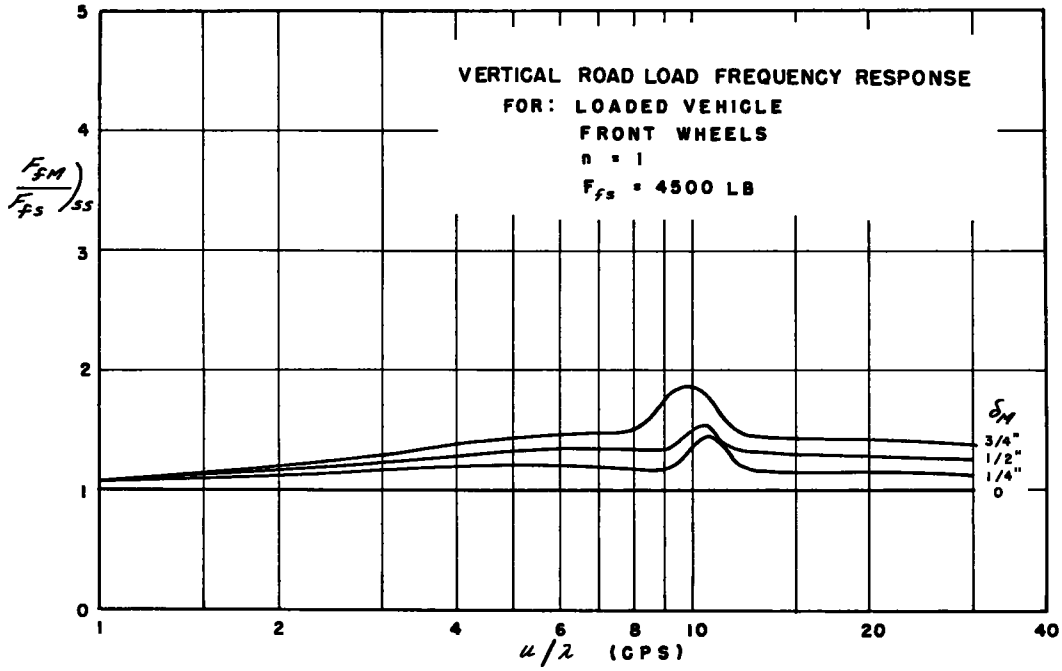

Figure 6.

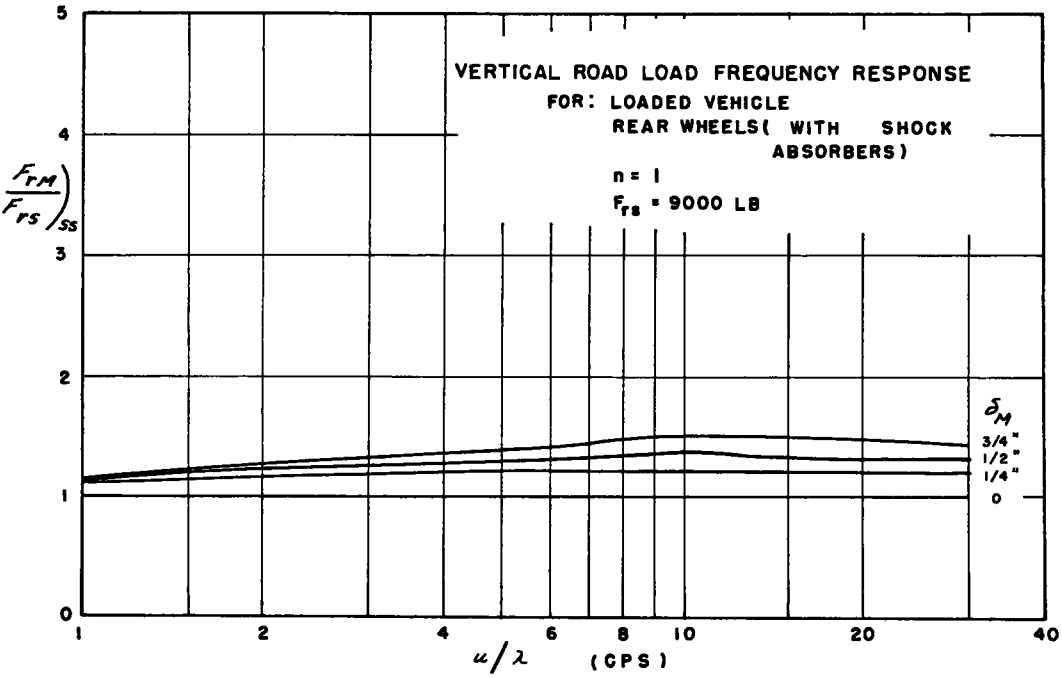

Figure 7.

some degree at almost any forward speed. The front axle dynamic loads, on the other hand, are down considerably at wheel hop resonance, and the magnification factor at very low and very high frequencies is the same. The effect of the shock absorbers in reducing the peak loads is evident, and it is felt that the higher values that do occur at the front axle natural frequency are in part due to pitching of the body excited by the rear axle motion. Conversely, the rear axle force amplitude ratios would be even higher without front shock absorbers.

The dynamic multiplier of the empty vehicle axle loads (Figures 9 and 10) is even greater than for the loaded vehicle. Fortunately for the road, the static load has been reduced sufficiently so that the actual load is considerably less than under the loaded truck. This is an example of what a poor suspension can do. The rear axle exhibits several extra peaks in its response which are the result of beating between the different natural frequencies within the system. The beating is excited by the non-linearities of the system.

The loaded vehicle with shock absorbers front and rear shows a considerably gentler response to road inputs. On the ½-in. amplitude road wave, the maximum dynamic load is 1.35 times the static value, only very slightly above the high frequency response on both the front and rear axles. The maximum value of 1.5 on the ¾-in. road wave is down to almost one-third the value of the truck without shock absorbers. The absence of any pronounced amplitude ratio peaking for either front or rear wheel road loads substantiates the opinion that the peak on the other configuration was due to the action of the rear axle, not the front. This example makes a good case for installing shock absorbers on the heavily loaded axles of commercial vehicles, as they can reduce road loading by a large factor.

CONCLUSIONS

The road loading system has been defined and resolved into two mathematically independent sub-systems, which are the road and the vehicle. By utilizing an approach common to the analysis of many dynamic systems, broad fundamental understanding of the interaction of the many road and vehicle elements may be obtained. If carried far enough, a mathematical representation relating all the elements of the road loading system may be developed.

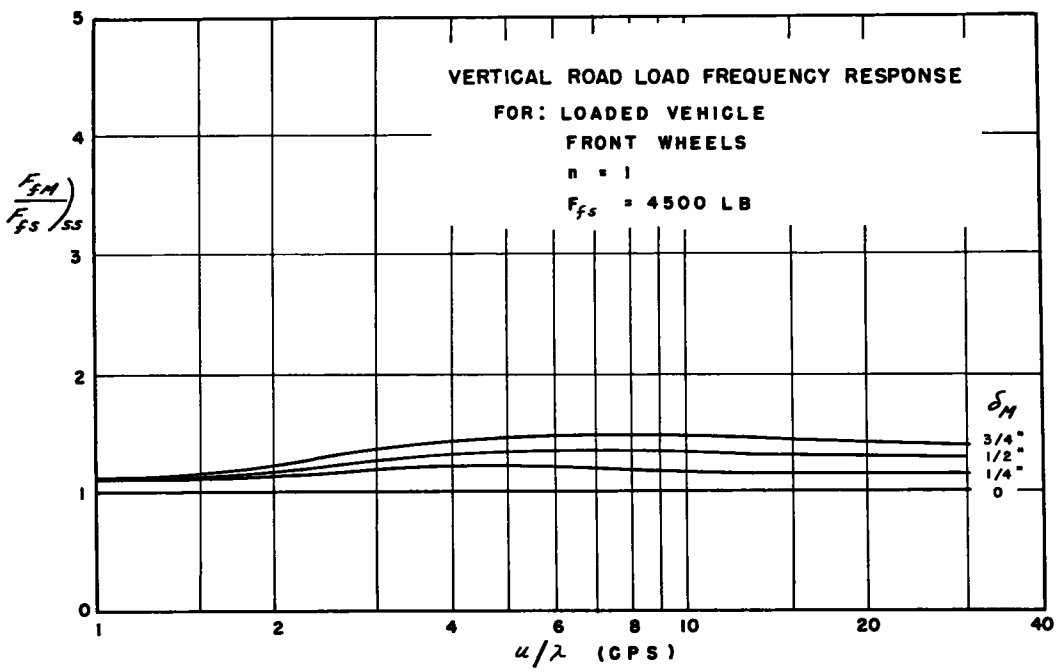

Figure 8.

A preliminary analysis has been performed on the vehicle sub-system. Basic equations of the mathematical model have been developed and the ranges of the parameters involved have been established. The dynamic road load may be significantly greater than the static road load. The dynamic road load magnitude is a function of vehicle dynamic properties and apparent road profile. Of particular significance is the effect of shock absorbers in reducing the peak road loading force.

The unloaded vehicle pitch and bounce natural frequencies are in the range of human body resonance, indicating an uncomfortable ride for the occupants.

RECOMMENDATIONS

It is recommended that development of analytical models of highway vehicles be continued and that a program of experimental verification of these models be initiated. The models developed in the present paper are adequate for preliminary studies, but considerable refinement and broadening of scope is necessary to accommodate the current operational vehicle types.

The major elements of suspension systems are capable of analysis. However, the detailed contribution of tires to the total loading mechanism is not well understood. Truck tires, in particular, have not been subjected to critical analytical or experimental investigation of the scope required here.

It is recommended that a program to set the highway in a dynamic system framework be carried out to provide analytical models commensurate with the vehicle models. It

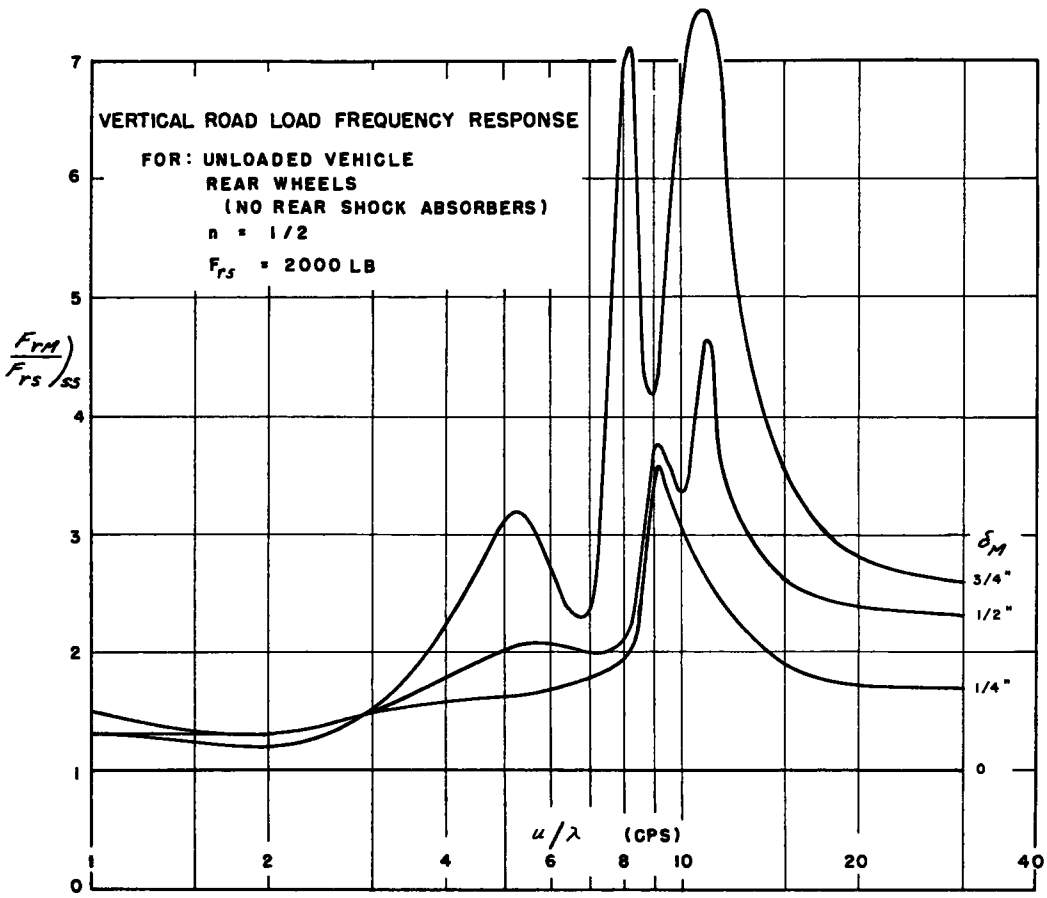

Figure 9.

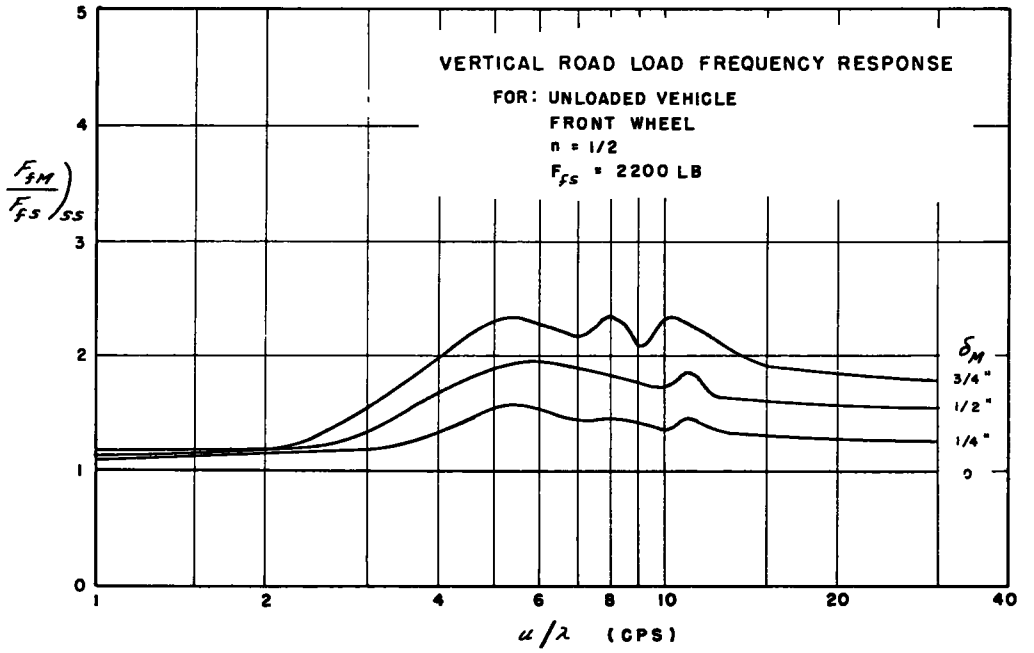

Figure 10.

is now clear that highway life must be considered in dynamic terms. Both the static axle loads and the dynamic variations must be considered, inasmuch as the road itself is a dynamic system that is sensitive to the frequency of the dynamic component of load.

The required program must define the highway elements that determine dynamic performance. It should be directed toward a comprehensive theory that will include static analysis techniques as special cases.

It is recommended that the interest and cooperation of the many groups and organizations concerned with efficient highway transportation be energetically enlisted for the support of the two broad programs outlined. It is necessary that all viewpoints be considered, and it is also necessary that all groups become aware of the objectives of this type of research and of the beneficial results that can accrue.

ACKNOWLEDGMENTS

The research on which this paper is based was sponsored by the U.S. Bureau of Public Roads under Contract Number CDR-11-7620.

REFERENCES

1. "Proposal for Research in Road Loading Mechanics." Cornell Aeronautical Laboratory (October 1958).
2. "The WASHO Road Test: Part 2-Test Data, Analysis, Findings." HRB Special Rept. 22, Washington, D.C. (1955).
3. Whiffin, A.C., et al., "First Interim Report on the Measurement of Dynamic Stresses in Roads." Research Note RN/2570/ACW, Department of Scientific and Industrial Research, Harmondsworth, Middlesex, England (August 1955).
4. Whiffin, A.C., et al., "Second Interim Report on the Measurement of Dynamic Stresses in Roads." Research Note RN/3104/ACW.SAHM.JWG., Department of Scientific and Industrial Research, Harmondsworth, Middlesex, England (September 1957).

5. Geldmacher, R.E., et al., "Subgrade Support Characteristics as Indicated by Measurements of Deflection and Strain." HRB Proc. 36, 479-496 (1957).
6. Woods, L.E. and Goetz, W.H., "Strength of Bituminous Mixtures and Their Behavior Under Repeated Loads." HRB Proc. 35, 405-417 (1956).
7. Woods, L.E. and Goetz, W.H., "Strength of Bituminous Mixtures and Their Behavior Under Repeated Loads, Part II." HRB Proc. 36, 318-333 (1957).
8. Wooltorton, F.L.D., "The Scientific Basis of Road Design." Edward Arnold, Ltd., London, England (1954).
9. Westergaard, H.M., "Stresses in Concrete Pavements Computed by Theoretical Analysis." Public Roads, 7:2, 25-35 (April 1926).
10. Westergaard, H.M., "Analytical Tools for Judging Results of Structural Tests of Concrete Pavements." Public Roads, 14:10 (December 1933).
11. Housel, W.S., "Principles of Design Applied to Flexible Pavements." Association of Asphalt Paving Tech. Proc. 13, 84-119 (January 1942).
12. Nibjoer, L.W. and Van Der Poel, C., "A Study of Vibration Phenomena in Asphaltic Road Constructions." Asphalt Paving Tech. Proc. 22, 197-237 (1953).
13. Nevitt, H.G., "A Mathematical Analysis of Some Phases of the Flexible Surface Design Problem." HRB Proc. 23, 149-154 (1943).
14. "Road Research, 1957." The Report of the Road Research Board with the Report of the Director of Road Research, Department of Scientific and Industrial Research, London (1958).
14a. "Measuring the Load Bearing Capacity of Roads." Engineering (April 9, 1954).
15. Havens and Yoder, "A Study of Interactions of Selected Combinations of Sub-Grades and Base Course Subjected to Repeated Loading." HRB Proc. 36, 443-478 (1957).
16. Seed, H.B. and McNeill, R.L., "Soil Deformations in Normal Compression and Repeated Loading Tests." HRB Bul. 141 (1956).
17. Pickett, G., Raville, M.E., Janes, W.C. and McCormick, F.J., "Deflections, Moments and Reaction Pressures for Concrete Pavements." Kansas State College Bul. 65 (October 15, 1951).
18. "Concrete Pavement Design." The Portland Cement Association (1951).
19. Mellinger, Wathen and Sale, "Heavy Wheelload Traffic on Concrete Airfield Pavements." HRB Proc. 36, 175-189 (1957).
20. Childs, L.D. and Kapernick, J.W., "Tests of Concrete Pavements on Gravel Sub-Bases." ASCE Proc. 84:H103 (October 1958).
21. Moore, J.H., "Determining the Required Thickness of Concrete Pavements for Highways." ASCE Proc. 81:596 (January 1955).
22. "Tire and Rim Association — Year Book." Tire and Rim Association, Akron, Ohio.
23. Tabor, D., "The Importance of Hysteresis Losses in the Friction of Lubricated Rubber." First International Skid Prevention Conference, University of Virginia, Charlottesville.
24. Bomhard, F.J., "Method of Measurement of Dynamic Wheel Loads of Motor Vehicle." Munchen (1956). (CAL Translation by J. Lotsof, July 1957.)
25. Endres, Dr. W. and Bomhard, J., "Vertical Forces Between Road Surfaces and Tires." (Bu. Pub. Roads Translation by A.C. Benkleman.)
26. Haley, H.P., "Vibrational Characteristics of Automotive Suspensions." Massachusetts Institute of Technology Doctoral Thesis (1938).
27. Routh, D.W., "The Simulation of the Suspension Systems of Large Earth Moving Equipment by Using an Analog Computer." Instruments and Automation 31:12 (December 1958).
28. Kohr, Robert H., "Simulation of Automobile Suspension and Steering Systems." Instruments and Automation 31:12 (December 1958).
29. Sattinger, I.J., "Three Dimensional Simulation of Vehicle Suspension Systems." Instruments and Automation 31:12 (December 1958).
30. Janeway, R.N., "A Better Truck Ride for Driver and Cargo." SAE Preprint No. 15A (January 1958).
31. Bastow, D., "Independent Rear Suspension." IME Auto Division Proc., 35-58 (1951-1952).

32. Geschelin, J., "New Heavy Duty Suspension Systems." Automotive Industries, 48 (September 15, 1956).
33. Crockett, C.V. and LaBelle, D.J., "A New Concept of Lightweight Highway Tractor Design." SAE Preprint No. 23R (January 1959).
34. Hume, D.R., "Front Suspension." Automobile Engineer, 239-242 (June 1955).
35. "Rear Suspension." Automobile Engineer, 172 pp. (April 1954).
36. Polkemus, V.D., "An Analysis of the Suspension Problems of the Automotive Vehicle." G.M. Engineering Journal (March—April 1954).
37. Olley, M., "Independent Wheel Suspension—Its Ways and Wherefores." SAE Journal 34:2, 73 pp. (March 1934).
38. Fox, H.E. and LaBelle, D.J., "Motor Coach Suspensions." SAE Transportation Meetings, Preprint No. 170 (November 2-4, 1953).
39. Hirtreiter, A.B., "A Resume of Bus Suspensions." SAE Transportation Meetings, Preprint No. 847 (October 10—12, 1956).
40. McFarland, F.R., "Torsion Level Suspension." SAE Preprint No. 537 (June 1955).
41. Dilman and Love, "Chrysler Torsion-Aire Suspension." SAE Preprint No. 79 (March 1957).
42. Polhemus, V.D., Kehoe, L.J., Cowin, F.H. and Milliken, S.L., "Cadillac's Air Suspension for the Eldorado Brougham." SAE Preprint No. 78 (March 1957).
43. Brown, Roy W., "Air and Heavy Vehicle Suspension." SAE Preprint No. 450 (January 1955).
44. Taylor, Paul H., "Liquid Springs in Vehicle Suspensions." SAE Preprint No. 452 (January 1955).
45. "Air Suspension on the Continent." Automobile Engineering, Part 1, 512-523 (December 1957); Part 2, 2-11 (January 1958).
46. Bodeau, Bollinger and Lipkin, "Passenger Car Suspension Analysis." SAE Preprint No. 536 (June 1955).
47. Cox, H.L., "The Riding Qualities of Wheeled Vehicles." IME Proc., Auto Div. (1955-1956).
48. Jeska, R.D., "A Comparison of Real and Simulated Automobile Suspension Systems." Willow Run Research Center, University of Michigan, UMM-117 (February 1953).
49. Lange, A. and Dute, J., "Electronic Simulation as an Aid to the Design of Vehicle Suspension Systems." SAE Preprint No. 753 (March 1952).
50. Wood, T., "The Use of Analog Computers in Design of Military Vehicles." SAE Preprint No. 461 (February 1955).
51. Milliken, W.F., Whitcomb, D.W., Segel, L., Close, W., Muzzey, C. and Fonda, A.G., "Research in Automotive Stability and Control and in Tyre Performance." Auto Division, IME (January 1957).
52. Schilling, R., "Effects of Unsprung Masses on Ride." SAE Transaction, 2:2 (April 1948).
53. Koessler, P. and Beermann, H.J., "Systematic Investigation of Dynamic Load of Road Vehicles." A.T.Z., 60:1, 1-6 (January 1958).
54. Olley, M., "Road Manners of the Modern Car." Auto Division, IME (1946).
55. Irick, P.E., Leathers, R.C., Lill, R.A. and Mertz, W.L., "The Use of Multiple Regression and Correlation in Test Road Data." HRB Proc. 35 (1956).
56. Timoshenko, S., "Strength of Materials." D. Van Nostrand Co., Inc. New York.
57. Miner, M.A., "Cumulative Damage in Fatigue." Applied Mechanics, 12, 159-164 (1944).
58. Taragin, A., "Transverse Placement of Vehicles as Related to Cross Section Design." HRB Proc. 23, 342-350 (November 1943).
59. Fonda, A. and Radt, H., "A Summary of Cornell Aeronautical Laboratory Tire Test Data." CAL Report No. YD-1059-F-2 (October 1958).
60. "Ride and Vibration Data." SAE Special Publication SP-6.
61. Housel, W.S. and Stokstad, O.L., "Pavement Profile Surveys to Correlate Michigan Design Practice With Service Behavior." HRB Proc. 38, 149-177 (January 1959).

62. Moyer, R.A. and Shupe, J.W., "Roughness and Skid Resistance." HRB Bul. 37 (1951).
63. Moyer, R.A. and Ahlborn, G., "Road Roughness and Slipperiness." HRB Bul. 139 (1956).
64. Taylor, G.B., "The Riding Quality of Machine Finished Concrete Roads in Denmark and The Netherlands." Surveyor, CVN #3363, 774-776 (October 1956).
65. Draper, C.S., McKay, W. and Lees, S., "Instrument Engineering." Vol. II, Methods for Associating Mathematical Solutions with Common Forms, McGraw-Hill, 627-665 (1953).
66. Crandall, Steven H., Ed., "Random Vibration." MIT Press, Cambridge, Mass., G-22 and G-23 (1958).
67. Fabian, G.J., "An Outline and Preliminary Analysis of the Basic Problems of Road Loading Mechanics." CAL Report No. YM-1304-V-1 (July 1, 1959).