Pilot Study of the Automatic Control of Traffic Signals by a General Purpose Electronic Computer

LEONARD CASCIATO, Chief Engineer, Traffic Research Corp., Toronto; and
SAM CASS, Traffic Engineer, Municipality of Metropolitan Toronto

• FROM THE BEGINNING of 1960 until the Spring of 1961 a network of traffic signals in a test area of Metropolitan Toronto were remotely operated by a general purpose electronic computer in a completely automatic, traffic responsive manner. The objectives of this experimental project were as follows:

1. To demostrate that an electronic computer could be connected into an existing traffic signal network to provide a very flexible, reliable, and very powerful coordinated signal system free of most of the limitations of existing traffic signal control equipment.
2. To obtain at least a first impression of how this powerful traffic control system could be used for improving traffic flow; for measuring the improvement; and for providing data on traffic to enable further improvement to be made.

The study was both a technical and an operational success and achieved both objectives. This paper summarizes the major aspects of the study.

ORIGIN OF THE SYSTEM

The impetus to develop and test such an unusual traffic signal system arose from a problem that is quite familiar to many traffic engineers. Present-day urban traffic is crowding existing streets to the limit and the traffic engineer must make the best use of every device at his command to prevent widespread traffic congestion. Frequently traffic problems are such that the only answer is to widen streets and build new overpasses and expressways, but the very high cost of providing new thoroughfares makes it imperative to use existing streets to their best advantage. By improving the efficiency of traffic flow by even a few percent in an urban area such as Metropolitan Toronto, the traffic engineer can save both the motoring public and the municipality many millions of dollars annually.

Effective control of traffic signals can play an extremely important part in keeping urban traffic moving freely. In rush hours especially, a signal system that can respond quickly to variations in traffic flow can do a great deal to reduce congestion and decrease delay.

From time to time, specialized forms of traffic signal equipment that respond in one way or another to traffic movements have appeared on the market, and the growing tendency in many American cities has been towards fairly heavy investments in this form of traffic signal modernization. However, though this equipment has aided somewhat in the improvement of traffic flow, its value in many traffic situations is rather limited. For example, none of this equipment can detect traffic congestion, and often will systematically aggravate rather than improve critical traffic conditions. In Metropolitan Toronto the best of such equipment would not significantly improve existing traffic situations, let alone those that may arise in the future. Available equipment, in spite of its advanced design, is simply not sufficiently flexible.

To deal with this dilemma a radically new signal control system was proposed that would have virtually unlimited flexibility in the manner in which traffic signals could adjust to traffic requirements. This proposed system would use a modern electronic computer to provide centralized coordinated control of the entire system of traffic

signals. A network of traffic detectors would provide the computer with a continuous supply of information on traffic movements to enable the computer to calculate the best sequence of signal changes throughout the network. The computer would have direct and complete control of each signal and would continually readjust the signals to serve best the immediate traffic picture.

The system offered, in addition, a built-in facility for studying and improving the method of control, and for making long-range traffic plans. It would be flexible enough not only to adapt to future changes in traffic patterns but also to take advantage of future improvements in traffic control techniques and devices. The incorporation of computer control into the existing signal system could be carried out very smoothly, and because the bulk of the complex equipment would be located in the central control area, maintenance problems would be minimized. Full use would be made of existing equipment which would serve as a standby system in case of accidental loss of automatic control.

A system as comprehensive as this promised the traffic engineers and the roads and traffic committees a solution to many of their problems. Local interest was sufficiently great that a pilot study was commissioned to test this new traffic control system under actual traffic conditions. The computer-controlled signal system was put into operation, for the first time anywhere, in a test area in Toronto and has controlled traffic through a group of busy intersections for over a year.

PHYSICAL SYSTEM

The various components of the computer-controlled traffic signal system are shown in Figure 1.

Existing traffic signal controllers are equipped with a small modification unit connected by telephone lines to the remote central control area. When energized by a pulse from central control, the modification unit stops the internal timing mechanism of the local intersection controller and transfers control of the signal switch to the central control area.

Spare contacts on the signal switch (drum) are suitably connected to telephone cables to permit the signals showing at the intersection to be monitored at the central control area.

Traffic detectors located throughout the controlled area are connected to central control by a third set of telephone cables.

The central control equipment consists primarily of a general purpose digital electronic computer. A special input-output buffer connects the computer to the telephone circuits which terminate in the central control area. The function of the buffer is to convert the pulses coming from the traffic detectors and the signal monitors into a form suitable for input to the computer. Similarly, computed numbers transmitted from the computer are converted into pulses that produce remote operation of the signals. The input-output buffer also provides a visual presentation of vehicle counts and signal displays. A special digital clock provides the exact time in 1-sec intervals, enabling the computer to perform computations based on real time. The actual appearance of the central control equipment can be seen in Figures 2 and 3.

Figure 4 shows a map of the test area used in the pilot study. It is roughly 1.7 mi long and ½ mi wide. The initial test area consisted of nine traffic signals located on a busy east-west segment of Eglinton Avenue. Traffic detectors were located on almost all approaches at distances ranging from 200 to 600 ft back from the crosswalks. The final test area used in the last stages of the study consisted of sixteen signalized intersections.

During the course of the pilot study, the general character of the traffic signal system remained unaltered throughout the test area. The signal phases prevailing at a particular intersection before the study were retained. Restrictions on parking along the approaches and limitations to turning movements at the intersections were not changed. The only influences brought to bear on traffic movements as a result of the study were those produced by the automatic operation of the traffic signals alone. In the test area there was ample variety of traffic situations available for study. Traffic

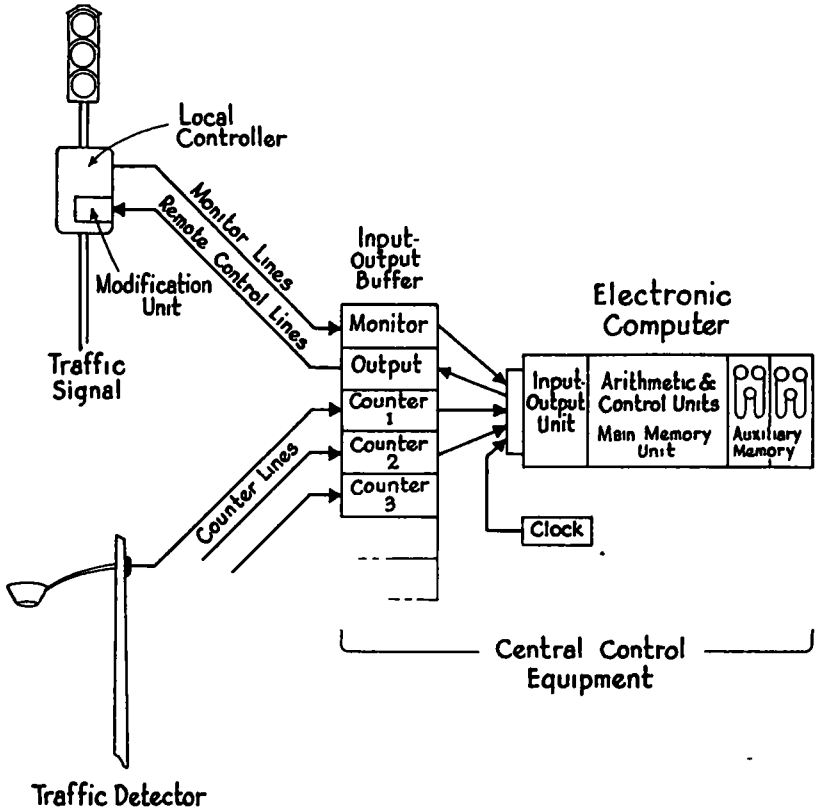

Figure 1. Components of automatic signal system.

movements varied over wide limits not only throughout the day as a whole but also within rush hour periods themselves.

SYSTEM OPERATION

The computer controls traffic signals by means of a master control program consisting of a large number of electronically stored instructions. These instructions, divided into groups of subprograms or subroutines, enable the computer to carry out a wide range of logical and mathematical operations relating to traffic movements and to the timing of traffic signals. For example, one of the subroutines instructs the computer how to initiate automatic control of the signals. Following a manual "start" order set up at the computer console, the computer begins reading in traffic data. As the computer observes each signal in turn advancing to a predetermined state (beginning of "main street" green), it energizes the modification units of the corresponding controllers and acquires direct remote control. The local timing dial is stopped in the dial-transfer position at the beginning of main street green and remains inoperative until released by the computer. From this point on, the signals can be changed only by the computer.

After automatic control has begun, further subroutines of the master control program enable the computer to analyze traffic data in order to operate the signals to best suit the measured traffic flow. Because of the large capacity of the magnetic tape units of the computer, a large number of control subroutines can be incorporated into the master control program.

Among these control subroutines are those enabling the computer to operate any

signal according to any of the standard techniques. For example, one subroutine simulates the familiar volume-density control. When the computer follows this subroutine in controlling a signal, the effect at the intersection is identical to that obtained by having an actual volume-density controller installed at the intersection. Similarly, interconnected systems such as the P.R. system used in Baltimore and Philadelphia can be simulated by the P.R. control subroutine.

Even if the computer did no more than to emulate standard control techniques it would already have a flexibility far beyond that obtainable with fixed-purpose hardware. All of the adjustments that must be made locally at the Volume Density Controller or at a P.R. controller are made centrally within the computer. To change intersection control from P.R. to volume density would normally involve reinstallation and rewiring of equipment at the intersection. With computer control it involves merely a manual change of a switch or an internal change automatically generated by the computer itself. A network of traffic signals can be functionally regrouped as often as desired according to whatever scheme is desired without any rewiring or readjustment of equipment.

Figure 5 shows such a network of traffic signals under the control of the computer. Because of the way the master control program is designed, the signals can be combined into any prearranged grouping and each group operated according to a different set of criteria if so desired.

The computer, however, can go far beyond merely simulating existing automatic signal systems. New concepts of traffic control can be developed and introduced. Because the computer system is not functionally limited by fixed purpose wiring and equipment, it does not become obsolete. The complexity of control is limited only by

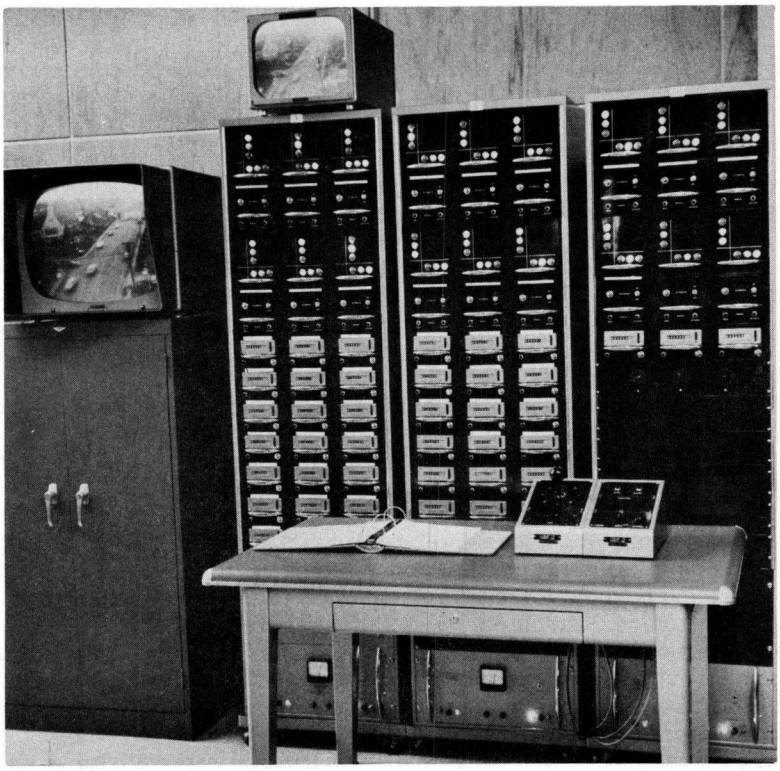

Figure 2. At remote control center located over 2 1/2 mi from test area, a special display unit indicates the signals showing at each intersection and records passage of vehicles past various detectors. This information is transmitted in coded form to electronic computer located in adjoining room.

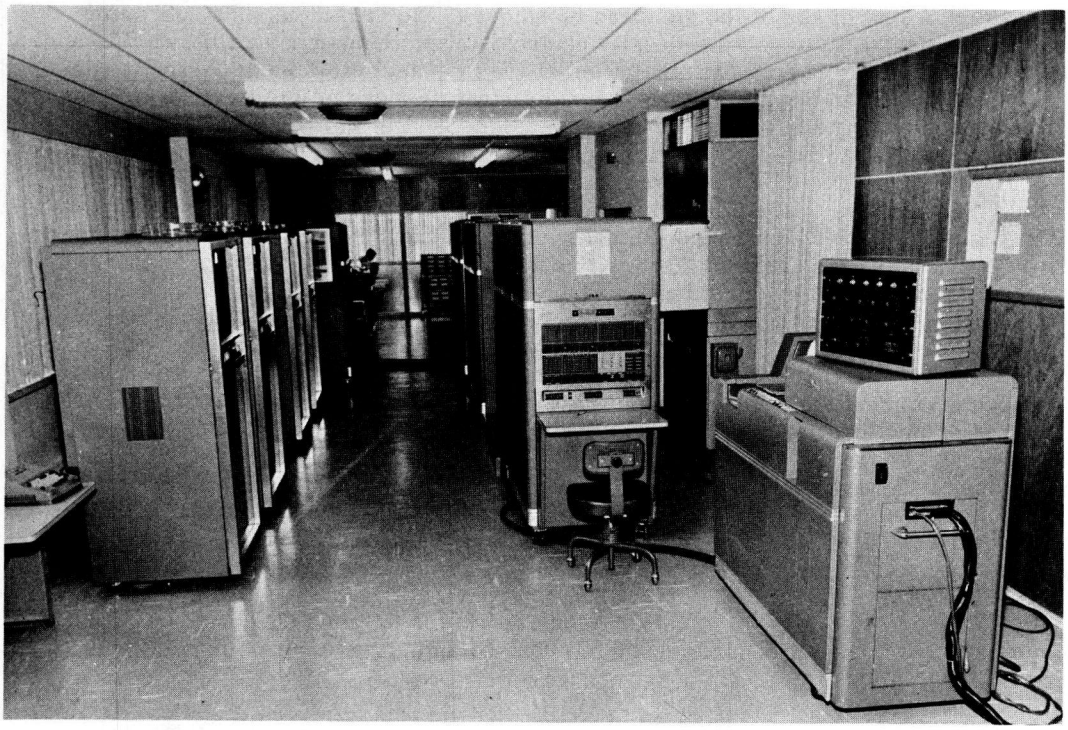

Figure 3. Electronic computer used to control traffic signals in test area examines traffic movements, computes coordinated timing schedules, and puts them into effect. During period of automatic control, computer has direct and exclusive control of each traffic signal.

the ingenuity of those designing and producing the control programs and by the ultimate speed and capacity of the machine.

During automatic control, the computer follows a control plan that is to be put into effect. As shown in Figure 5, several different control modes may be involved in a single control plan. The change from one control plan to another may be brought about manually at the computer console or may be made to depend on computed index described prevailing traffic flow.

In addition, the computer has tables of data that describe the physical characteristics of each intersection, such as the number of lanes on each approach and the distance of the detectors from the crosswalk. Thus, whichever general principles of control are being applied, they are specialized to suit each individual location. Figure 6 shows some of the logical functions of the master control program used in the pilot study.

During automatic control the computer continuously repeats the following sequence of actions: it reads in all current traffic data, the detectors, monitors, and clock. Computations are carried out for each intersection in turn to determine which signals if any should be switched. An output pulse is transmitted to carry out any necessary actuations and the monitors are immediately rechecked to see that the actuations (if any) were carried out correctly. This computational sequence is completely repeated every 2 sec. Any malfunction of the equipment will cause the computer to release control to the local intersection or intersections, depending on the extent of the malfunction. While control proceeds, a complete record of traffic and control data is stored on magnetic tape for later analysis.

The end of a period of computer control may be determined by a preset time the clock eventually reaches, or by a manual change of a switch at the console. When the computer receives the "terminate" instruction, it continues controlling the signals

until it has advanced each signal through the completion of a normal cycle into the beginning of "main street" green phase. Control is then released back to the local signal controller which picks up where it left off in a completely smooth manner.

After a period of automatic control, the same computer that operated the signals is now able, by means of special data reduction programs, to analyze the traffic records stored on magnetic tape. Thus, the influence of various control schemes on traffic can be studied and new control methods can be planned.

METHOD OF CONDUCTING TESTS

To take full advantage of the flexibility of the computer it was necessary to develop new methods of controlling traffic. In addition it was necessary to evolve methods of dealing with the large amounts of centrally recorded traffic data for the purpose of evaluating different methods of control.

As a starting point, attention was focused on the capabilities of existing traffic control systems. During the summer of 1960 considerable work was done on the qualitative testing of the best of currently developed traffic control systems including the familiar volume density and P.R. systems. The benefits and shortcomings of these control methods were clearly exhibited. Meanwhile, the control programs were further developed to introduce concepts of traffic signal control that had not been used anywhere before. For example, there was incorporated into the control programs a computational method by which the computer could detect the presence of congestion and take corrective action to help clear it up. At the same time analytical techniques were evolved for objectively studying traffic movements.

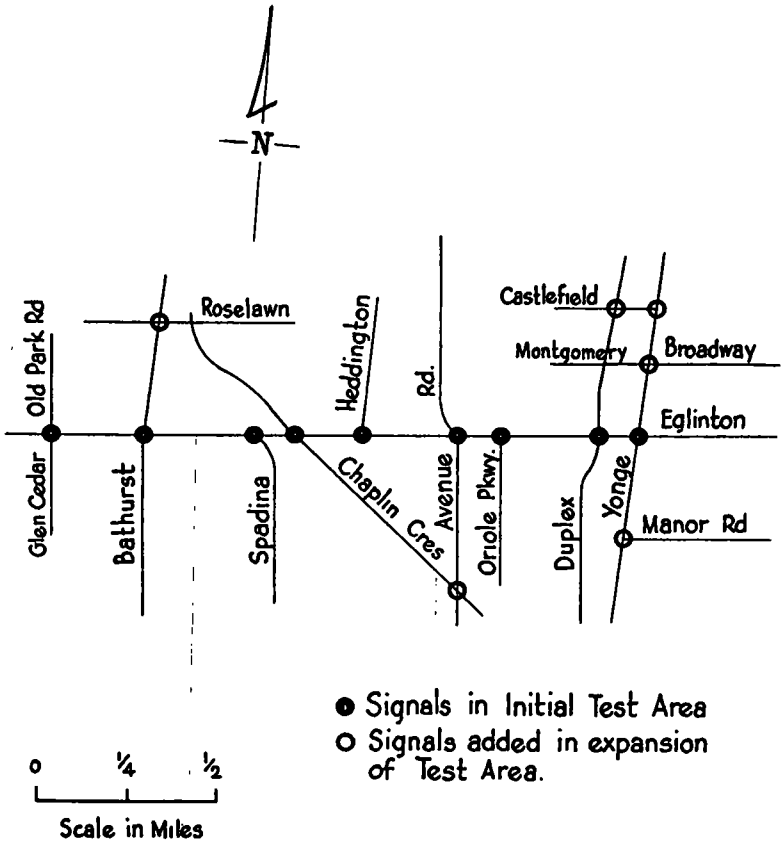

Figure 4. Expanded test area.

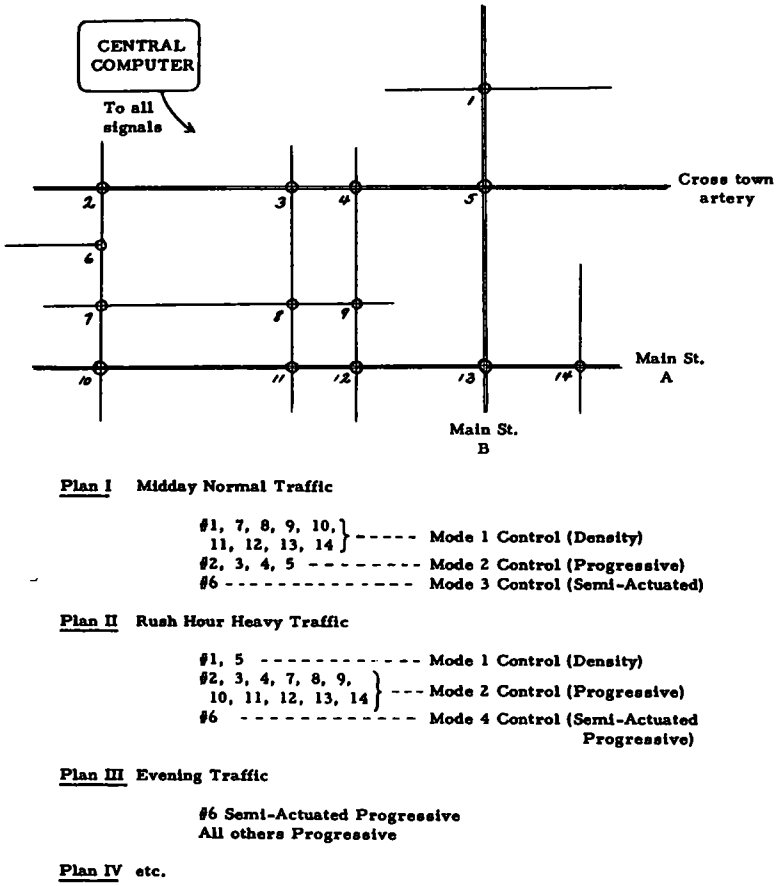

Figure 5. Example of control of traffic signals according to different grouping plans.

The pilot study has shown that the recorded data is sufficient to produce close estimates of travel time, delays, and congestion without the necessity of field observations (except for corroborative proof). Information such as average volumes and space-time charts are readily produced. The arithmetic necessary to derive these figures can be performed by the computer very easily because the raw data is recorded in a form compatible with computer input.

A detailed account of the many ways the recorded data were used for evaluating traffic movements is beyond the scope of this paper. The following discussion, however, illustrates some of the uses to which these data were put.

Platoon Structure and Travel Time

Some of the most interesting results are obtained by examining the counter information in conjunction with the monitors. One of these is the study of platoon structure.

A question fundamental to deciding on the best offsets between signals in a progressive system is a knowledge of how long it takes drivers to go from one intersection to another under varying conditions, and also how platoons spread out between intersections.

This can be derived from the recorded data by considering the cars arriving at a given counter relative to the time the previous signal became green for this direction, as shown by the appropriate monitor. Figure 7 shows an example of platooned structure for southbound vehicles arriving at Bathurst-Eglinton in each 5-sec interval after the signal at Roselawn changes to southbound green.

When both the size and shape of the usual platoon and also its timing relative to the preceding signal is known, it is possible to set the average offset of the following signal in a manner often superior to the usual method of allowing a first vehicle in a platoon to proceed unhindered at an assumed speed.

Delays

To measure delays to vehicles on an approach to an intersection it is necessary to keep track of each vehicle from the time it reaches a certain point on the approach until it enters or clears the intersection. The time required to do this is the actual travel time. By subtracting the time required for an unobstructed car to travel the same distance, an estimate of the delay caused by the signal and by other vehicles is obtained.

To do this in practice is difficult because the information received and recorded by the computer includes the time of passage of every vehicle at the detector, but does not include the time of release or clearance through the intersection. It is therefore, necessary to make some assumptions (based on actual observations) about the normal travel time from detector to crosswalk, the period and rate of release, the probability of a car entering one or other of a multilane queue depending on the length of the queue.

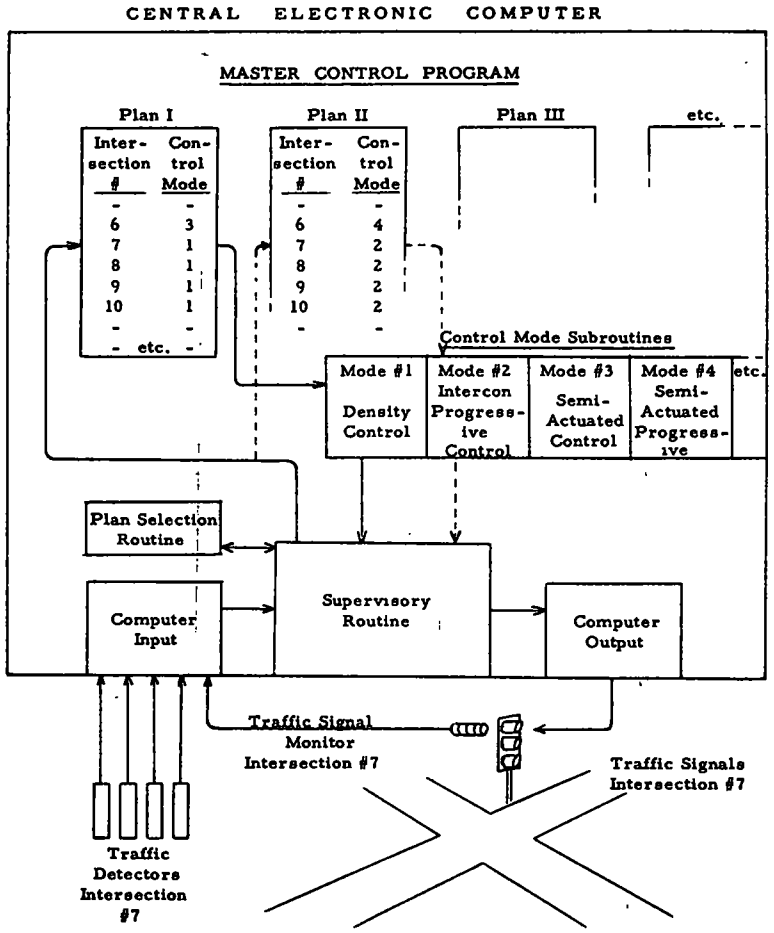

Figure 6. Computer consults control plan to determine mode of actuation to be given to a particular intersection.

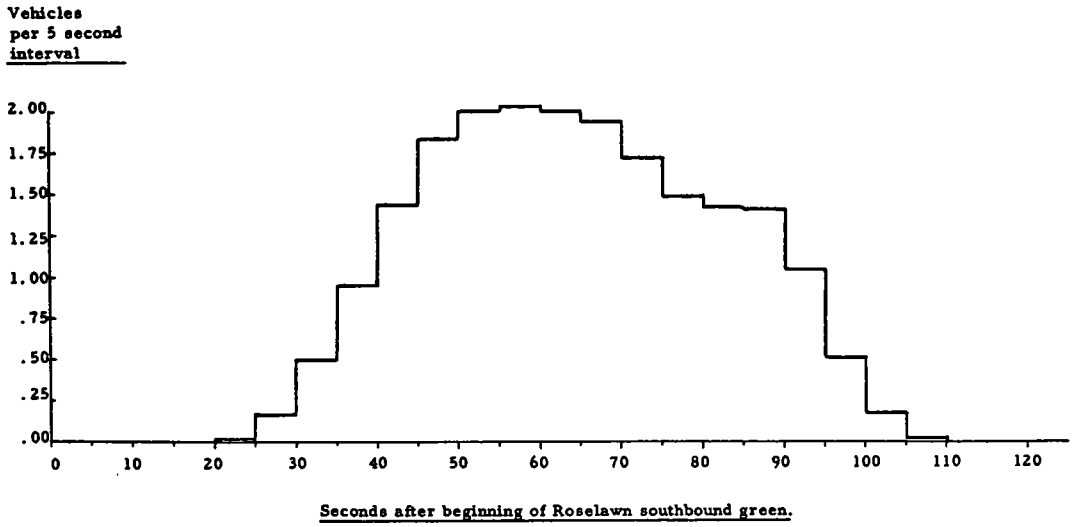

Figure 7. Histogram showing number of southbound vehicles arriving at Bathurst - Eglinton in each 5-sec interval after light at Roselawn turns green for southbound traffic. It indicates, for example, that from 50 to 70 sec the arrival rate is about two cars in each 5 sec or 0.2 cars per sec per lane (there are two lanes). Also about 3 percent of platoon arrives in less than 35 sec, better than a 30-mph average.

To check the accuracy of the calculated delays, speed and delay runs were carried out in the test area. Table 1 compares the average delays as determined by the computer with the actual delays noted in the field tests. As the table shows, the agreement was excellent.

TABLE 1

OBSERVED VS CALCULATED DELAYS

Street	Traffic Direction	Delay (sec) Observed	Delay (sec) Calculated	No. of Observations
Bathurst	Eastbound	29.8	30.3	100
	Westbound	43.4	44.8	84
Avenue Road	Eastbound	33.0	33.8	113
	Westbound	36.8	36.6	15

Congestion

Traffic congestion is a rather subjective concept. For the purposes of the study an approach to an intersection was considered congested whenever the queue of waiting vehicles extended past the detector.

The reason for this definition is that in most locations the detectors were mounted approximately 300 ft back from the crosswalk. A green time of 30 sec can clear a 300-ft queue of about 12 or 13 vehicles per lane. Hence, in most cases a queue that extends beyond the detector position may not clear on a normal green period. If the queue extends past the detector throughout the entire cycle, it is definitely excessive and may in fact be interfering with movement at preceding intersections.

The measures developed for determining when excessive queuing is present were based on the pattern of movement past the detector relative to the timing of the traffic signal.

Case A.—The queue extends well past the detector

(i)

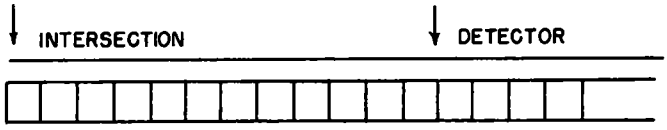

When the signal light turns green there is no movement under the detector. The vehicle at the head of the queue starts to move.

(ii)

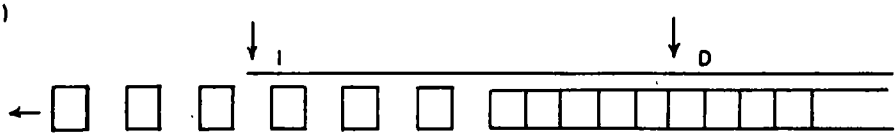

A few seconds afterwards, there is still no movement under the detector, but the motion "wave" is approaching at the rate of 100 ft in 6 sec. (This is an experimental result.)

(iii)

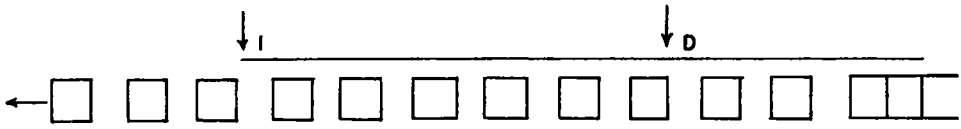

After the motion wave reaches the detector, detections occur at the rate of one every 2 to $2\frac{1}{2}$ sec (on each lane), until either the end of the queue clears the detector or the movement is stopped again by a red light and the queue has closed up.

Case B.—The end of the queue does not reach the detector. The pattern of arrivals is determined by the preceding intersection and, except in the case of a progressive system, bears no relation to the observed intersection. In the case of a progression toward the intersection, the head of the arriving platoon should pass the detector just before the signal turns green, so that movement at the detector would occur at a different time relative to the signal than it would with a long queue.

Figure 8 shows how these results appear in the plots of recorded data.

By early Fall, the preliminary testing was completed and a carefully planned evaluation study conducted throughout the test area. Morning and evening rush hour periods were studied under various forms of automatic control and under the usual fixed-time control. To provide a thorough check on the computed traffic picture, field observers from the local traffic engineering staffs were stationed at all important intersections to record special details on traffic movements through all rush hour periods of the study. Test cars driving through the system at carefully recorded times provided actual experience of speed and delay. The results of this special test program, which extended over a month's time, formed the basis for judging the value, at this fairly early stage of development, of the computer-controlled traffic signal system.

While this special evaluation project was under way, the test area was expanded to its final form with all 16 traffic signals under automatic operation by late Fall 1960.

RESULTS OF PILOT STUDY

A comparison of the automatic system with the existing fixed-time system during the special evaluation tests produced the following results.

In the evening rush hours, the automatic system decreased the average delay per vehicle by some 11 percent. In the morning rush hours, the average delay per vehicle decreased by 25 percent, and congestion was reduced by 28 percent.

To the average driver, this means rush hour speeds that often average less than 12 or 13 mph can be increased to over 16 mph. To the traffic engineer it means that for a given delay, traffic volumes may be increased up to 20 percent.

These figures describe the performance of the automatic system developed only to an intermediate stage of efficiency. With further development of the control programs and with extended control of traffic on an area basis, greater benefits may be anticipated.

From the standpoint of reliability, the automatic traffic system performed extremely well. The most complex components, the central computer and associated equipment gave virtually no trouble at all. A single style of modification unit served to convert each of the signal controllers for automatic operation without compromising any of the normal fixed-time functions. The transitions from periods of fixed-time control to automatic control and back again was completely smooth. The only components that gave less than expected reliability were the traffic detectors. The type used during the study proved to have too short a service life to enable its consideration as an economical component of a final system.

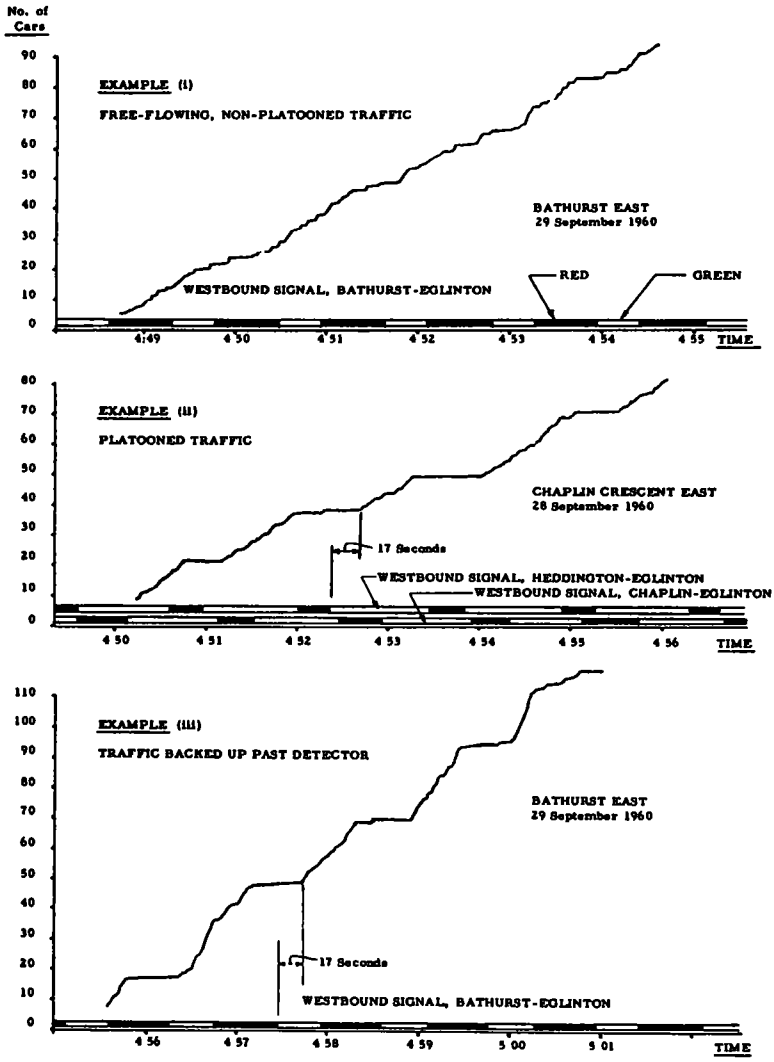

Figure 8. Congestion patterns.

In anticipation of this problem, a separate program of detector evaluation was undertaken during the pilot study to test various types of detectors and to experiment with new prototype units. Recent developments indicate that not only may the reliability problem be solved but the installed cost of the newer devices may be considerably less than those encountered in the pilot study.

A FULL-SCALE SYSTEM

The pilot study has demonstrated that with an electronic computer as the basis of control, a powerful traffic signal system can be realized that is practical for city-wide installation.

It is reasonable to assume that a full-scale system would provide benefits citywide which should be comparable to those achieved in the test area, for the following reasons:

1. A wide range of traffic situations were encountered in the test area, some of which are as difficult to control as any in Metropolitan Toronto.
2. The control programs used in the evaluation tests were developed only to a relatively early stage. With further development in the light of increased experience in traffic control, greater benefits should result.

The value of extending the benefits achieved in the pilot study throughout the entire Metropolitan Toronto area is outlined next.

It has been estimated that in the metropolitan area over 50,000 vehicle-hr of delay are caused by rush-hour traffic congestion every day. Conservative estimates place the costs of fuel and general wear and tear to vehicle in congested stop-start driving at about $0.90 per hr. This makes no allowance for the cost of personal time.

If the results of the pilot study were extended throughout the entire traffic area we could expect a reduction in total traffic delay exceeding 9,000 vehicle-hr daily. This would amount to a direct saving to the motoring public of over $2,000,000 per annum in vehicle operating expenses alone.

In addition, the effective increase of peak capacity of the road system would provide an immediate benefit that would otherwise require some $20,000,000 to $40,000,000 for widening existing street facilities or building new roads.

The major traffic area in Metropolitan Toronto is controlled by a network of some 500 traffic signals. To operate these signals with an automatic system that would provide a good compromise between performance and initial cost, yet could be expanded to whatever limit of future complexity it was economically feasible to go, would cost some $3,500,000 to install and about $200,000 per annum to operate.

The Municipality of Metropolitan Toronto is presently considering this course of action as a sound investment.