Methods of Traffic Measurement—Determination of Number and Weight of Vehicles

STIG EDHOLM, Chief, Traffic Research Department, National Swedish Road Research Institute, Stockholm

The National Swedish Road Research Institute has designed and constructed a small transportable scale for measuring the axle loads of vehicles in motion. This scale consists of a platform installed in the road pavement and an instrument case placed on the side of the road. The scale platform rests on three load-sensitive devices operating on the strain gauge principle. Only the wheel load at one end of an axle is recorded. The dimensions of the platform are small: length, 1 ft 8 in.; width, 4 ft 7 in.; depth 4⅜ in. This is required for two reasons: the platform should be easy to transport, and the cost of the foundation in the road pavement should be low. The measurements are automatically recorded on a strip chart when vehicles pass the platform. The scale also serves as a traffic counter inasmuch as the chart data are evaluated so that the recorded vehicles can be classified into various groups according to magnitude, number, and spacing of recorded axle loads.

In Sweden, since January 1961, the National Swedish Road Board has been conducting regular measurements at about 200 weighing sites, which are distributed over the whole country. These measurements are made by 5 patrols. The results of the measurements indicate that certain simple relations exist between the number of vehicles passing a road section per unit time and the total vehicle weight or the total pay load of these vehicles in each group of vehicles. Extensive investigations have been made to determine these relations.

A small-sized traffic counter is being tested at the present time. This counter not only counts the number of vehicles passing the road section under observation but also records the group of vehicles to which each individual vehicle belongs. Patents covering the principles of this traffic counter have been applied for.

•FOR MANY YEARS the National Swedish Road Board has been conducting both mechanical and manual traffic counts. The mechanical counts take place at a very large number of observation points. The results of these counts are obtained in terms of the total number of axles that have passed the observation point during the counting period in both directions of travel taken together. To determine the distribution of the vehicles among various vehicle groups, the mechanical counts are supplemented with manual counts. The results of the mechanical traffic counts are represented in flow maps, which show the average daily traffic for the whole year and the average daily traffic for the summer on most roads in Sweden. Moreover, some other, less extensive traffic investigations (e g., destination studies) are made in this connection.

The traffic data collected in this way serve as a basis for priority estimates, planning and design of new roads, allocation of maintenance grants, forecasting, surveys of traffic development, etc.

The rapid growth of road traffic during the past few years has caused an increase in the costs of maintenance, improvement, and extension of the Swedish road system. It is therefore necessary that these estimates, etc., should be made with a greater precision than that which is possible at the present time. However, this requires more detailed information on traffic, particularly commercial vehicle traffic. For instance, data on the total weight of the commercial vehicles that travel along various roads on an average per day and data on the composition of the traffic on the roads studied in this connection would constitute a valuable supplement to the results of the other traffic measurements.

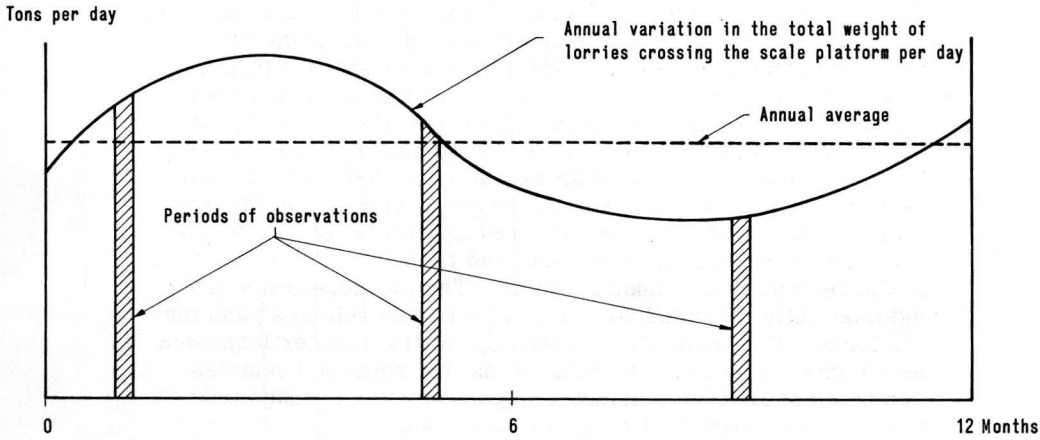

Figure 1. Random sampling procedure in axle load measurements.

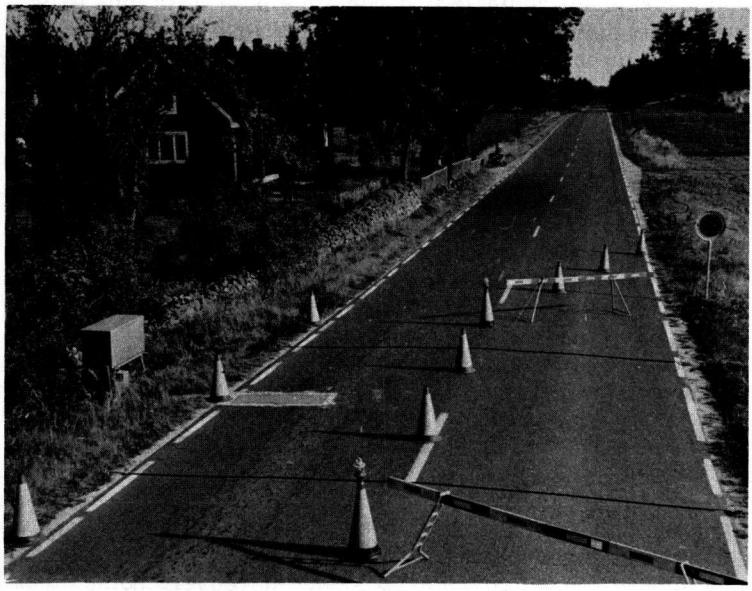

Figure 2. Weighing site. Scale platform visible on left side of road.

For this reason, the National Swedish Road Board has requested the National Swedish Road Research Institute to design and to construct appropriate equipment for measuring the weight of moving vehicles at a great number of observation points, approximately 200. Such a weighing equipment should entail a low first cost and a low operating cost. Furthermore, it should be easily transportable from one site to another, fully automatic in operation, and equally well suited for summer and winter use.

Measurements made to determine the total weight of the commerical vehicles that pass an observation point on an average day during a year, just as the traffic counts made for the purpose of determining the average daily traffic for the whole year, must be carried out on a random sample basis; e.g., by using three periods of observation per year (see Fig. 1). The error involved in such measurements is made up of the following two component errors:

1. The random sample error; i.e., the error due to the fact that the calculation is based on values obtained during a small number of short observation periods, and not during the whole year.
2. The error in measurements that is involved in the determination of the weight of vehicles.

The number of observation periods per year shall be adapted to the accuracy required. The error in measurements made for determining the weight of vehicles may be assumed to be small in comparison with the random sample error allowed in these studies.

AXLE LOAD SCALE

The considerations just outlined were taken by the National Swedish Road Research Institute as a point of departure for the design and construction of a scale equipment that should measure the axle loads of moving vehicles without necessitating their stopping. This scale equipment consists of a load-sensitive platform installed in the road pavement. This platform is connected by a cable to an instrument equipment, which is enclosed in a sheet aluminium case (see Figs. 2 and 3). When a vehicle moves across the platform, the load applied by each axle to the platform is recorded. The total weight of the vehicle is obtained by adding together the loads due to all axles of the vehicle. The scale is fully automatic in operation, and needs to be looked over only a few times per day.

Weighing Site

The scale platform extends across about one-half a traffic lane (see Fig. 2). Only the wheel loads at one end of an axle are measured, and the axle loads are obtained by multiplying the observed wheel loads by a factor equal to 2 for roads without any lateral slope. For roads with a lateral slope, the value of this factor is less than 2. If the speed at these weighing sites is restricted to 20 km per hr (12.5 mph), then the weighing can be carried out with sufficiently high accuracy even when the road pavement before and behind the platform is not particularly even. Accordingly, a scale platform can be installed in the road pavement without necessitating in general any adjustment of the road surface. On gravel roads, however, the carriageway should be covered with a suitable surfacing about 25 m (80 ft) before and behind the platform to prevent pitting. When the platforms are removed from the foundations after completion of measurements, they are replaced by wooden fill-in slabs.

On roads handling a large flow of traffic, a platform is installed in each traffic lane, and the traffic at the weighing site is canalized in an appropriate manner. If the traffic flow is small, then the platform is located in one lane only, while the other lane is shut off, and meeting restrictions are established at the weighing site (see Fig. 2). The direction of travel of each vehicle is recorded at the same time as the axle load.

Foundation

The scale platform is screwed to a foundation embedded in the road pavement. The top surface of the platform is set level with the road surface. The dimensions of the

platform are small: length, 0.5 m (1 ft 8 in.); width, 1.4 m (4 ft 7 in.); and depth, 0.11 m ($4\frac{3}{8}$ in.). This is required for two reasons: (a) the platform should be readily transportable, and (b) the construction cost of the foundation in the road pavement should be low.

The foundations are constructed in pits excavated in the road pavement. Each pit is about 30 cm (1 ft) longer, wider, and deeper than the scale platform. The foundations are made of reinforced concrete. A steel frame is embedded in each pit. This

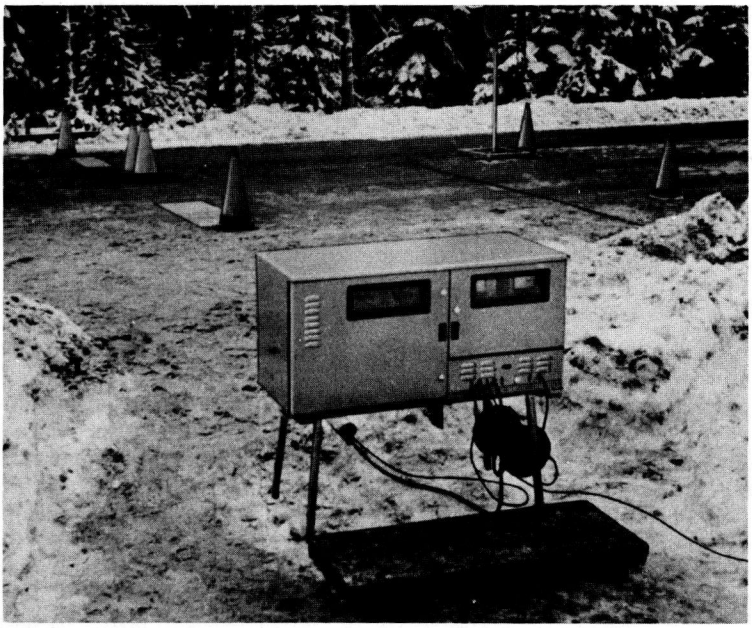

Figure 3. Instrument case.

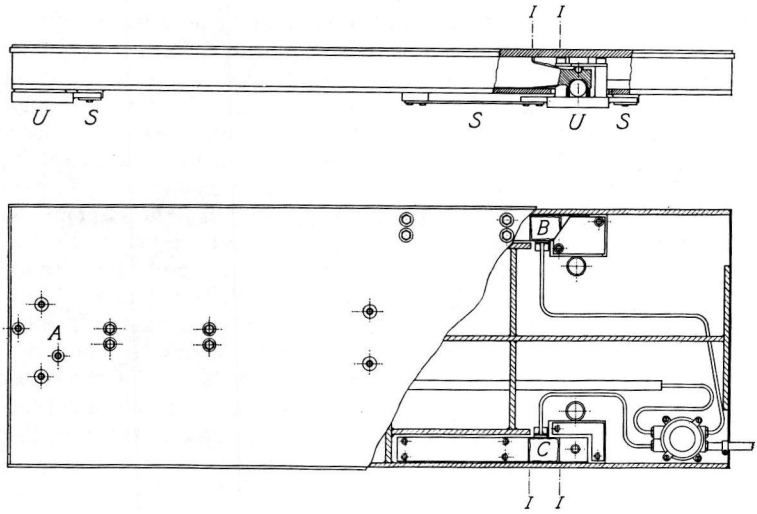

Figure 4. Scale platform.

frame constitutes the walls of a rectangular trough, 12 cm (4¾ in.) in depth, in which the platform is placed and fastened.

The bottom of the foundation is provided with a large-sized drain pipe. The platform is attached to the foundation by bolts screwed into threaded holes in the steel frame. The construction of a foundation takes only a few hours.

The clearance between the platform and the walls of the foundation is sealed with a rubber gasket, so as to prevent the entry of water, snow, sand, etc.

Scale Platform

The platform is a welded steel plate structure connected without any play to two seating strips U (see Fig. 4) which are screwed to the foundation when the platform is installed. Vertical forces are transmitted to the seating strips by three load cells A, B, and C, and horizontal forces are transmitted by three thin supporting springs S.

As these supporting springs are relatively soft, the seating strips U, which support the load cells by means of steel balls, can turn so that they abut the supporting surfaces in the foundation. Furthermore, the platform rests at three points only. Therefore, the geometrical accuracy in the construction of the foundations can be comparatively low without jeopardizing the possibilities of stable attachment of the platform to the foundation. Consequently, the costs of construction of the foundation can be kept low, the installation of the platform is easy to carry out, and no subsequent adjustment is needed.

The load cells operate on the wire resistance strain gauge principle. Each load cell consists of a steel bar, which is screwed into the platform at one end, whereas the other end is clamped by means of a flat spring between two steel balls in the seating strip. Disturbing bending moments cannot be transmitted through these balls to the load cell. When the scale platform is subjected to a load, the load cells are submitted to a bending stress. In the free portion I - I, this stress is proportional to the load. The magnitude of the bending stress is measured by means of wire resistance strain gauges.

Figure 5 shows the wire resistance strain gauge used in this scale. The strain-sensitive wire, about 0.025 mm (1/1,000 in.) in diameter, in the form of a zig-zag coil is cemented on a paper, bakelite, or plastic support. The strain gauge is cemented on the surface at the point of measurement.

Four wire strain gauges A, B, C and D are attached to each load cell (see Fig. 6). They are connected together to form a measuring bridge network (see Fig. 7). An AC voltage is applied to this network at the dividing points 2 and 4. When the load cell is submitted to a load, this causes an increase in the resistance of the strain gauges C and D (which are subjected to tension) and a decrease in the resistance of the strain gauges A and B (which are subjected to compression). Accordingly, an out-of-balance voltage is produced across the dividing points 1 and 3 of the bridge network, and this voltage is proportional to the load acting on the load cells.

Because the platform rests on the three load cells, the load on the scale is equal to the sum of the loads on these load cells. If the measuring networks of the three load cells are connected in parallel, then a resultant out-of-balance voltage is obtained that is proportional to the total load on the platform.

Instrument Equipment

The out-of-balance voltage, which is very low, is amplified in a carrier frequency amplifier. This amplifier is also used as an AC voltage source for the measuring bridge networks.

The output current of the carrier frequency amplifier is fed to a galvanometer loop in a direct-recording instrument, which is known as ink jet recorder. The galvanometer loop is provided with a nozzle, which projects a thin ink jet with a high velocity on strip chart paper, about 12 cm (4¾ in.) in width, which is fed at a constant speed. The ink jet traces a fine line, whose position on the strip chart is determined by the direction of the ink jet; i.e., by the angle of deflection of the galvanometer.

The strip chart paper need not be specially treated, and is therefore cheap. Folded strip chart paper is used at the present time, and a packet of chart paper is sufficient for recording some 6,000 vehicles.

The strip chart paper in the recorder is started when a vehicle passes over a rubber tube that is stretched across the road about 3.5 m (11 ft 6 in.) in front of the platform and actuates a diaphragm switch. A time lag attachment, which is controlled by the pulses emitted from the diaphragm switch, keeps the strip chart paper moving until all axles of the vehicle have passed across the platform and their loads have been recorded.

A block diagram of the equipment is shown in Figure 8. Care was taken to insure that the sensitivity of the scale be constant during a period of observation; e.g., a week. This problem was of paramount importance in the experimental stage. It was solved by taking the following measures:

1. The load cells and the cable connections were provided with highly reliable electric insulation to prevent the entry of water, which can cause insulation faults.
2. The temperature in the interior of the instrument case is maintained constant by means of a thermostat-controlled electric hot-and-cold unit.
3. The supply voltage is kept constant at 220 V by means of a supply voltage stabilizer.

The insulation resistances of the load cells, wire strain gauges, and conductors as well as the sensitivity of the carrier frequency amplifier and the recorder are automatically controlled every hour. For this purpose, a resistance is connected in parallel with the wire strain gauges A in the parallel-connected measuring bridge networks (see Fig. 7). This resistance has been adjusted so that the out-of-balance voltage that it produces in these bridge networks is equal to that caused by a load of 5 metric tons on the platform. Consequently, if the equipment is in perfect working order, then the recorder records a check pulse corresponding to 5 metric tons during, say, 3 sec every hour. At the same time, the strip chart is stamped automatically with the time

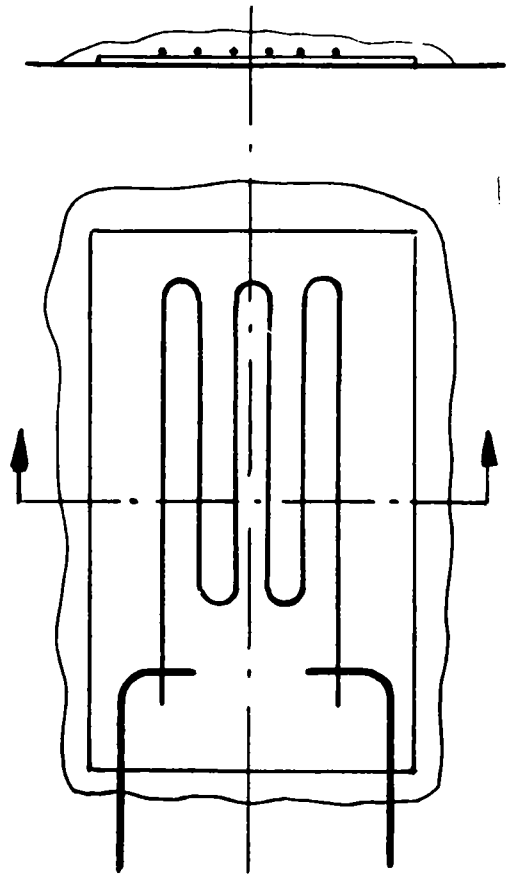

Figure 5. Wire resistance strain gauge.

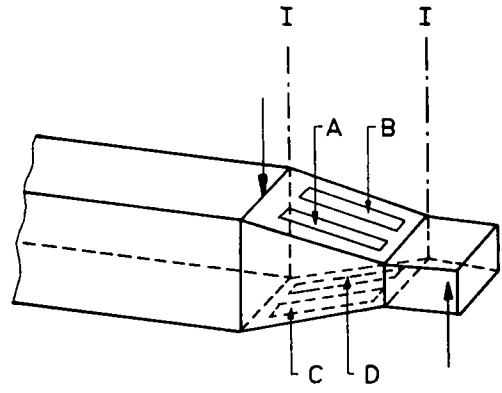

Figure 6. Location of wire resistance strain gauges on load cell.

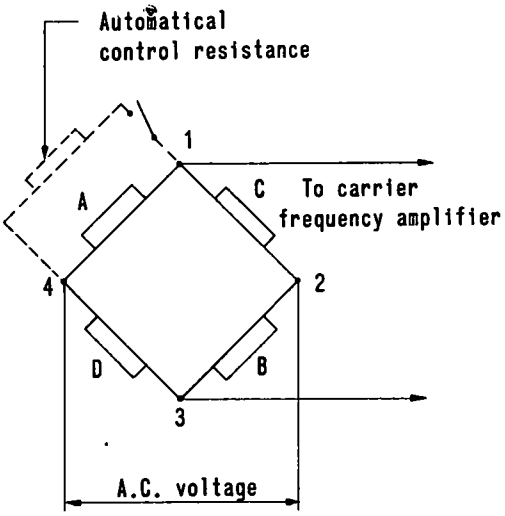

Figure 7. Measuring bridge network.

(in hours and minutes) of this check recording. The time can also be stamped manually on the strip chart by pushing a button in the instrument case. This manual time stamping is used as a check when the patrolmen inspect the equipment, calibrate the scale, etc.

For calibration, the platform is loaded by the aid of a hydraulic jack, and the magnitude of the load is measured with a mechanical load gauge. The scale is usually calibrated twice every week. The whole calibration procedure takes about 10 min.

MEASUREMENTS

Variation in Load Across Scale Platform

The scale should be capable of reproducing faithfully the variation in load which takes place when a vehicle crosses the platform. A schematic diagram representing the variation in load during the passage of a wheel across the platform is shown in Figure 9. When the center of the wheel moves from A to B, the wheel rolls from the road pavement on to the platform. Between B and C, the whole surface of contact of the wheel rests on the platform. When the center of the wheel moves from C to D, the wheel leaves the platform and moves on to the road pavement. The height H in this figure is a measure of the wheel load.

At a speed of 20 km per hr (12.5 mph), the time during which the whole wheel load (e.g., 4 metric tons) is acting on the platform is only about 0.05 sec. The scale must

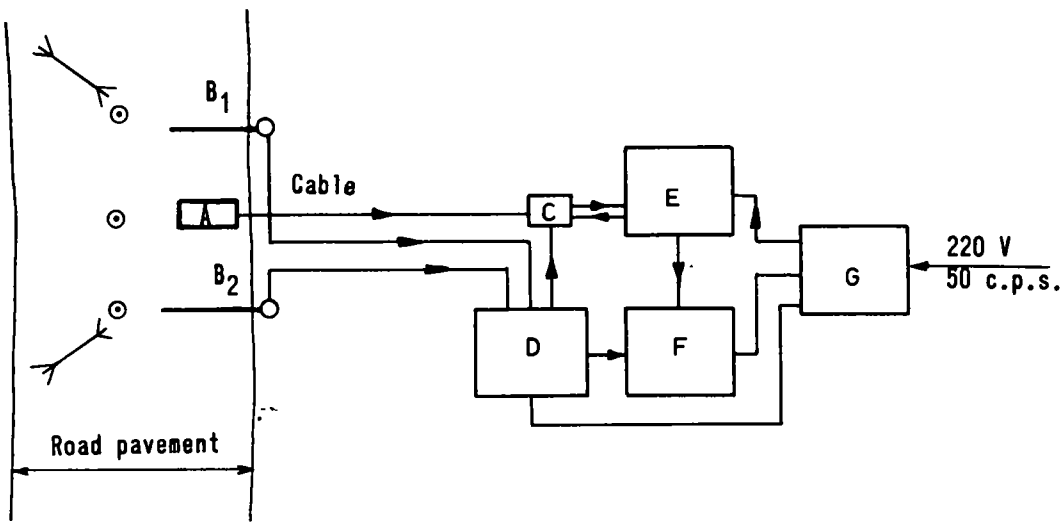

Figure 8. Block diagram. A = scale platform; B = rubber tube; C = connection box; D = automatic control unit; E = carrier frequency amplifier; F = recording instrument; G = supply voltage stabilizer.

therefore be capable of reproducing rapid variations in load. This was achieved by designing the scale to obtain suitable characteristics, such as high natural frequency, a low weight of the platform, and a high spring constant of the load cells.

The recorder must also be capable of reproducing these rapid variations in load without involving any appreciable errors.

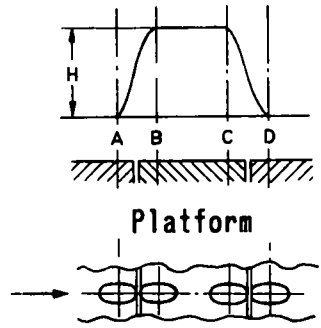

Various positions of the surface of contact of the wheel.

Figure 9. Variation in load across platform.

Dynamic Increment

The axle load acting on the road pavement (or on the platform of the scale) when the vehicle is in motion differs from that caused by a vehicle at rest. This difference, which can be positive or negative, is known as the dynamic increment. It is usually due to irregularities of the road surface and to deviations from true roundness of the wheels, which give rise to vibrations of the wheels and the body of the vehicle. Moreover, acceleration and retardation produce differences in load which are also regarded as dynamic increments.

Accuracy in Measurements

The purpose of the measurements just described was primarily to determine the sum of the axle loads of the vehicles passing a weighing site during a sufficiently long period of time. The scale in question is well adapted for this particular purpose because the difference between the positive and negative dynamic increments is relatively slight. However, the dynamic increment in an individual observation can be comparatively large. Extensive studies dealing with the magnitudes of the dynamic increments in individual observations as well as in sums of observations are being planned to be carried out in 1962. A new method for these extremely intricate studies is being devised.

To illustrate the studies of the magnitude of the dynamic increment made up to the present time, the results of a small investigation are reproduced. This investigation was carried out on two scales that were installed on the same road at a distance of about 25 m (80 ft) from each other. The road pavement at the weighing site did not comply with the necessary requirements in respect of evenness. This investigation comprised measurements on 35 axles of lorries in one direction of travel and 18 axles in the other. The axle loads were measured, first, on each vehicle at rest, and then, on the same vehicle while it was crossing the platforms at a speed of about 25 km per hr (12.5 mph). For the vehicles at rest, the recorded sum of the axle loads was found to be 318.5 metric tons on the scale 1 and 316.5 metric tons on the scale 2.

In the measurements made on the vehicles moving across the platform, the respective sums were 326.0 and 326.1 metric tons. In other words, the respective deviations from the results of measurements on the vehicles at rest were 2.4 and 3.0 percent. The sum of the axle loads of the vehicles at rest obtained by means of the scale 1 was 0.6 percent greater than that observed by the aid of the scale 2. This can be due to errors in calibration or in readings. It was not possible to carry out a separate investigation in each direction of travel because the number of vehicles was too small.

A more detailed report on the accuracy in measurements will be published later.

Strip Chart and Its Evaluation

A specimen of a strip chart recorded at a weighing site where the platform was in-

stalled in one traffic lane only is shown in Figure 10. The upper curve represents the magnitude of the axle load, and the lower curve indicates the direction of travel. Vehicles moving in one direction are marked by positive pulses when the vehicle crosses the rubber tube in front of the platform. In that case, the rubber tube behind the platform is blocked. Vehicles traveling in the opposite direction are marked in an analogous manner by negative pulses.

If the weighing site is equipped with a platform in each traffic lane, then the upper curve represents the axle loads of the vehicles traveling in one direction, and the lower curve shows the axle loads of the vehicles moving in the opposite direction. In such cases, the impulses emitted from the rubber tube in front of each platform are recorded as a third, intermediate curve on the strip chart. The rubber tubes are situated at a distance of 3.5 m (11 ft 6 in.) from the platform (see Fig. 2). In evaluating the strip charts, it is therefore possible to find out whether the wheelbase of a vehicle is longer or shorter than 3.5 m (11 ft 6 in.) (see Fig. 10).

The data are transferred manually from the strip chart to special printed punched cards (mark-sensing cards) by marking them with India ink (see Fig. 11). The information conveyed by each ink mark is then mechanically punched on the card. Each card comprises three columns for each axle; viz., two columns for the axle load and one column for a mark indicating whether the axle in question is a single axle or a front or rear axle in a bogie. Each set of columns for each axle on the card has a number (1, 2, etc.). The data relating to the first axle of the vehicle, reckoned from the front, are entered in the set of columns No. 1, the data referring to the second axle are marked in the set of columns No. 2, and so forth.

A special column is used to indicate whether the wheelbase of the motor vehicle is longer or shorter than the distance from the rubber tube to the platform; i.e., 3.5 m (11 ft 6 in.). This indication is employed for classifying the vehicles into groups. In evaluating the magnitudes of the axle loads, use has so far been made of a transparent rule graduated in metric half-tons. For taking readings, this rule is laid on the strip

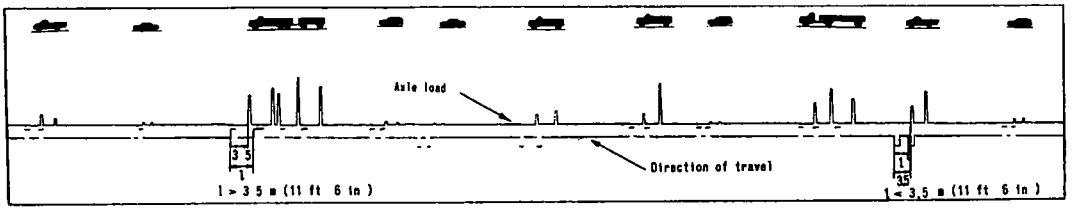

Figure 10. Specimen of strip chart.

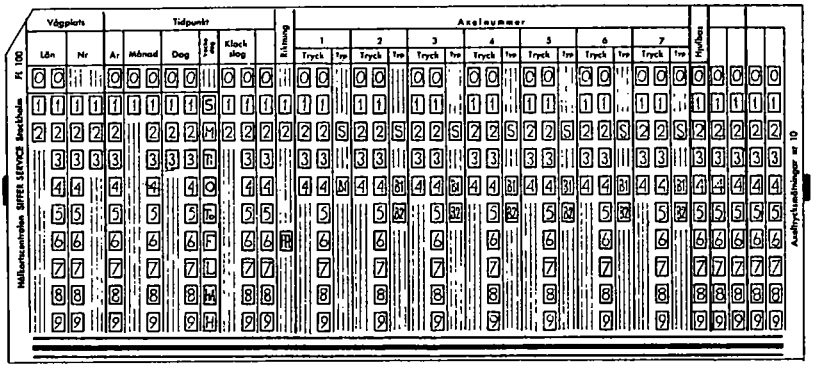

Explanatory notes

Vägplats	Weighing site
Tidpunkt	Time
Axelnummer	Axle No
Län	County
Nr	No.
År	Year
Månad	Month
Dag	Day
Veckodag	Day of the week
Klockslag	Hour
Riktning	Direction
Tryck	Axle load
Typ	Type of axle
Hjulbas	Wheelbase

Figure 11. Punched card (mark sensing).

chart. The number of private cars (i.e., vehicles weighing less than 2.5 metric tons) is counted separately.

The punched cards are fed to a data-processing machine, which classifies the vehicles into groups that are closely in accordance with the transport functions of the various types of vehicles. Figure 12 shows the types of vehicles that belong to the different groups of vehicles. This group classification is employed in Sweden at the present time in connection with the axle load measurements.

Owing to the use of this method of evaluation, the scale equipment just described can also be used as a vehicle-differentiating traffic counter.

This method of evaluation is relatively labor-consuming, but it enables the treatment of the data obtained from the measurements to be advanced very far. In this way, administrators, researchers, etc., can be furnished with particularized information on the traffic in a traffic flow.

The possibility of constructing a machine for automatic transfer of the requisite data from the strip chart to punched cards or tape is being studied at the present time.

The punched cards are handled in conformity with various programs. For example, the following characteristics of the vehicles passing the scale platform per unit time can be calculated:

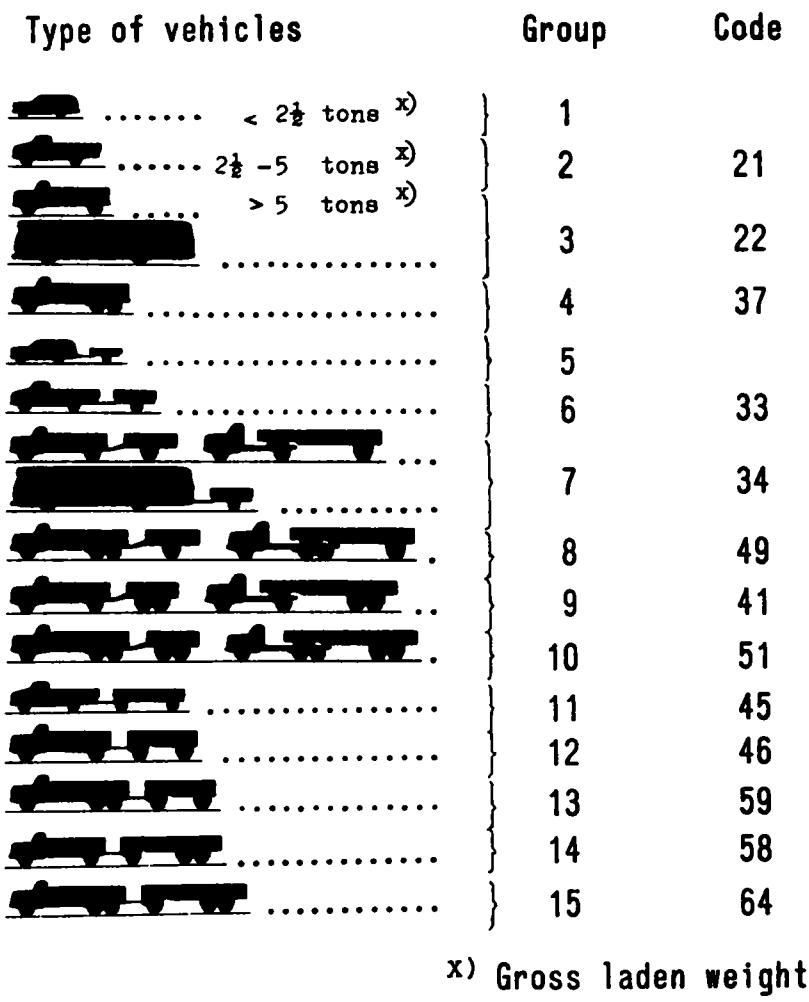

Figure 12. Types of vehicles in different groups.

1. Total number of vehicles.
2. Number of vehicles in each group of vehicles.
3. Total vehicle weight of all lorries.
4. Total vehicle weight of lorries in each group of vehicles.
5. Total vehicle weight of various units in road trains (e.g., the tractor or the trailers) in each group of vehicles.
6. Distributions of observed vehicle weights and axle loads or bogie loads.
7. Estimated total pay load of the vehicles defined under 3, 4, and 5 (this requires the reading-in of certain constants in programing the data-processing machine).

Measurements Made During Experimental Period

The first measurements with an experimental scale were started in May 1959. A second scale was constructed in the same month, and measurements were made at three weighing sites in June. These measurements, which were carried out in collaboration with the National Swedish Road Board, showed that it would be possible to use this scale for ordinary traffic measurements. The Board therefore gave the Institute an order for three complete weighing equipments to be used for more extensive tests. These equipments were ready for use in the autumn of 1959.

RESULTS

The results of some investigations are briefly summarized in what follows. These investigations are based on the data obtained from the axle load measurements made when the scale equipment was tested in 1959 and 1960 at 29 weighing sites in Central and Northern Sweden, sometimes under winter conditions. The measurements at each weighing site were as a rule performed during 5 days. These data comprise axle load recordings relating to 16,500 lorries in all.

Figure 13 shows the mean axle loads in different groups of vehicles. This figure shows, among other things, that the axle loads generally increase with the size of the vehicle (the number of axles).

Table 1 gives the make-up of the traffic and the total weight of lorries (divided into two groups; viz., light lorries, with two or three axles, and heavy lorries, with more than three axles) during a measuring period of three days and nights (weekdays). These data were obtained from measurements made at the following weighing sites:

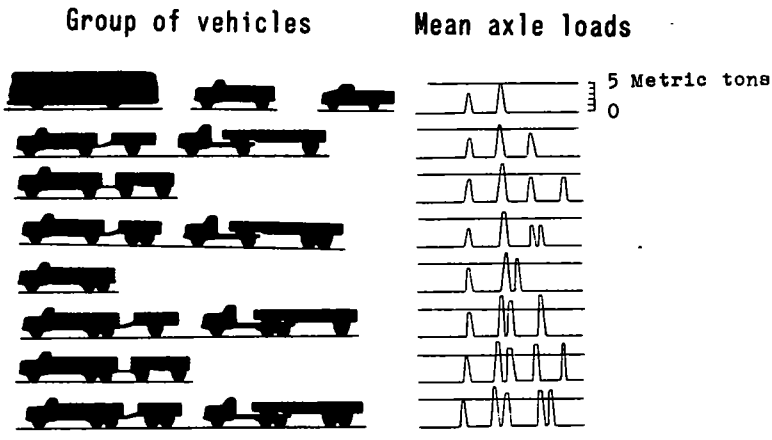

Figure 13. Mean axle loads in different groups of vehicles; 16,500 lorries, 29 weighing sites in central and northern Sweden, 1959 - 1960.

TABLE 1

RESULTS OF AXLE LOAD MEASUREMENTS[1]

Road	Measurement			Lorries								
				2- or 3-Axle			Over 3-Axle			All		
	Date	No. of Hours	No.of Private Cars	No	%	Weight (met. T)	No.	%	Weight (met T)	No.	%	Weight (met T)
Nat. Main 12[2]	Jan 1960	59	2,093	612	54	4,943	170	46	4,163	782	100	9,106
County 233[3]	Jan -Feb. 1960	60	1,069	406	78	3,930	53	22	1,129	459	100	5,059
County 735[4]	June 1959	59	897	232	51	2,228	93	49	2,210	325	100	4,498
	Jan. 1960	62	634	209	53	1,837	68	47	1,615	277	100	3,452
County 356[5]	Sept 1959	63	499	179	91	1,529	7	9	143	186	100	1,672
	March 1960	63	566	164	40	1,674	84	60	2,466	248	100	4,140

[1] Each measurement carried out during three successive days and nights (weekdays).

[2] In Grådo, Kopparberg Co., carrying National Main Road traffic.

[3] Through road in Balhyttan, Varmland Co., carrying certain amount of timber traffic.

[4] In Intrånget, Kopperberg Co., carrying mining transport predominantly.

[5] Through road in Korstrask Co , carrying timber transport predominantly.

1. Gråd̈o, National Main Road 12, County of Kopparberg. National Main Road traffic.
2. Bolhyttan, County Road 223 (through road), County of Värmland. A certain amount of timber transport.
3. Intrånget, County Road 735, County of Kopparberg. Mining transport predominant.
4. Korsträsk, County Road 356 (through road), County of Norrbotten. Timber transport predominant during the winter.

For the first two sites, the table gives only the results of measurements carried out during the winter. A comparison of the results obtained at these two sites shows that the heavy lorries, with more than three axles, were more predominant on the National Main Road than on the through road. At Intrånget, where the mining transport predominates, the weight percentages in the two groups of lorries are approximately equal in June and in January, whereas at Korsträsk, where the timber transport predominates, the weight percentage of lorries with more than three axles in the winter is seven times as great as in the summer.

Figure 14 shows that the mean percentages of lorries were as follows: two-axle lorries, about 60 percent; three-axle lorries, about 20 percent; four-axle lorries, about 13 percent; and five-axle lorries, about 7 percent of the total number of lorries. Furthermore, this diagram represents the mean vehicle weights in the various groups of vehicles. These weights were estimated from the total recorded data. The mean unladen weights given in Figure 14 are based on a survey of the register of motor vehicles in the County of Kopparberg. Furthermore, this figure also indicates the ratio of the mean pay load to the mean vehicle weight in each group of vehicles.

The number of two-axle lorries, expressed in percent of the total number of lorries at the various sites, varied from 28 to 93 percent. The relation between the number and the weight of two-axle lorries, expressed in percent of the total number and the total weight, respectively, of lorries, is shown in Figure 15. The curves in this graph are based on the mean weights tabulated on the right. This relation has been confirmed by the values observed at the various weighing sites. For instance, as is seen from the graph, if 60 percent of all lorries at a weighing site are two-axle lorries, then they correspond to about 40 percent of the total vehicle weight and to about 30 percent of the total pay load of the lorries passing the weighing site in question. This result shows that an appropriate classification of vehicles into groups is of fundamental importance in determining those characteristics of traffic that are significant from a transport point of view.

Group of vehicles	Number of vehicles	Per cent	Pay load / Vehicle weight
	9853	60	0.35
	2107	13	0.46
	560	3	0.48
	1363	8	0.47
	25	0	0.51
	1122	7	0.54
	289	2	0.63
	152	1	0.63
	1026	6	0.62
	8	0	0.61
Total	16505	100	

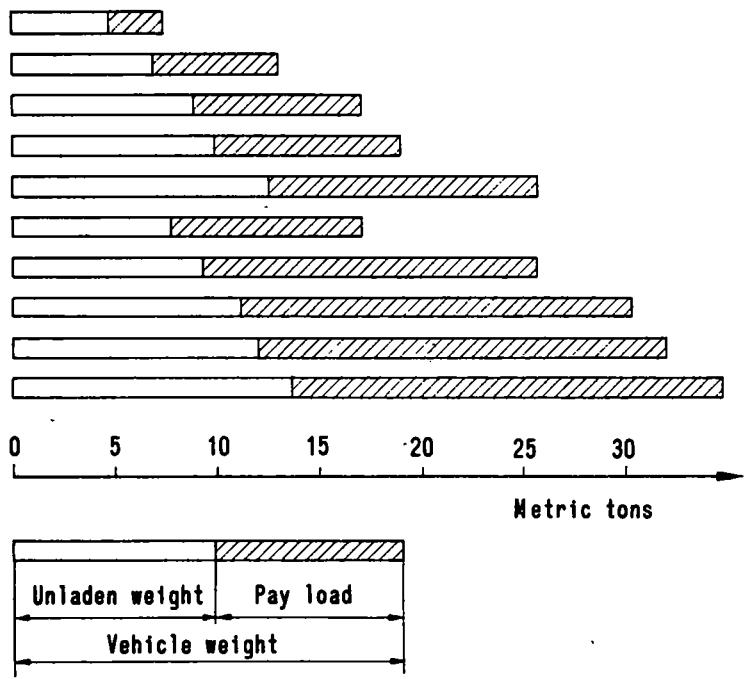

Figure 14. Number of vehicles, mean weights, etc., in each vehicle group.

Measurements in Progress

In view of the positive experiences gained from these axle load measurements in 1959, the National Swedish Road Board decided early in 1960 that the measurements should be extended so as to cover the whole of Sweden, and should be made regularly at some 200 weighing sites. At the same time, the Board resolved that the manual traffic counts, which had been carried on for many years, should be discontinued for the time being be replaced by these measurements.

Accordingly, the Board requested the Institute to construct new scale equipments. They were improved on the basis of the available experiences so as to increase their reliability in operation and to simplify their handling. The new scale equipment was put into service at the beginning of 1961.

The map of Sweden (Fig. 16) shows the situation of the weighing sites. The country is divided into five regions. The measurements in each region are made by a patrol, which consistes of 2 men, and uses a specially built lorry (see Fig. 17). Each lorry transports three complete scale equipments, road signs, the requisite road-blocking devices, etc. The equipment of each lorry includes, a lifting device used for the installation of the platforms on, and their removal from, the foundations. The measurements are carried out at three neighboring sites at the same time during, say, a week, and then the patrol moves on to the next three weighing sites.

These measurements as well as the evaluation and the analysis of their results are conducted entirely by the National Swedish Road Board. Figure 18 shows lists of traffic count data and axle load data obtained from the data-processing machine.

Estimation of Total Pay Load from Axle Load Data

The estimated total pay load $L_{est.}$ is determined by estimating the total unladen weight $T_{est.}$, which is subtracted from the observed value of the total vehicle weight $B_{obs.}$ measured at the weighing site

$$L_{est.} = B_{obs.} - T_{est.} \qquad (1)$$

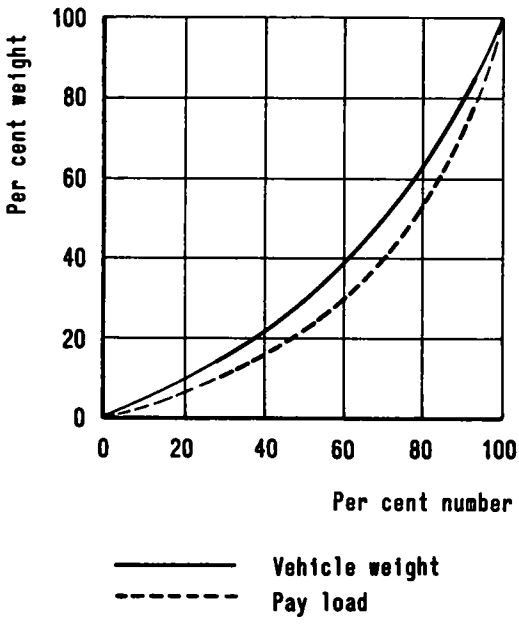

Group of vehicles	Mean weight in metric tons	
	Vehicle weight	Pay load
2-axle lorry	7,5	2,6
Other lorries and combi-nations	19.2	9.7

Figure 15. Average relations between weight percentage and number percentage of 2-axle lorries.

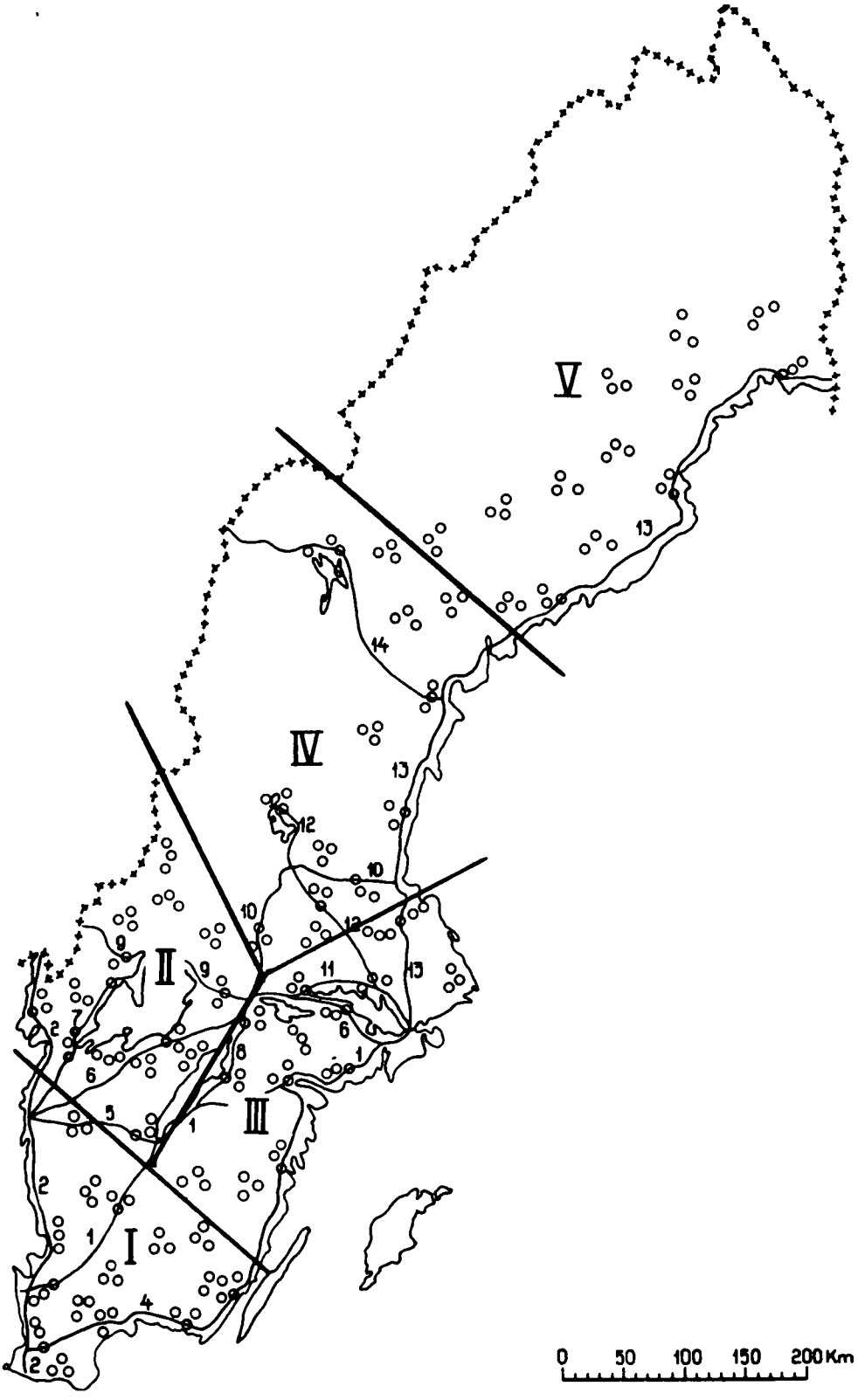

Figure 16. Map of weighing sites in Sweden.

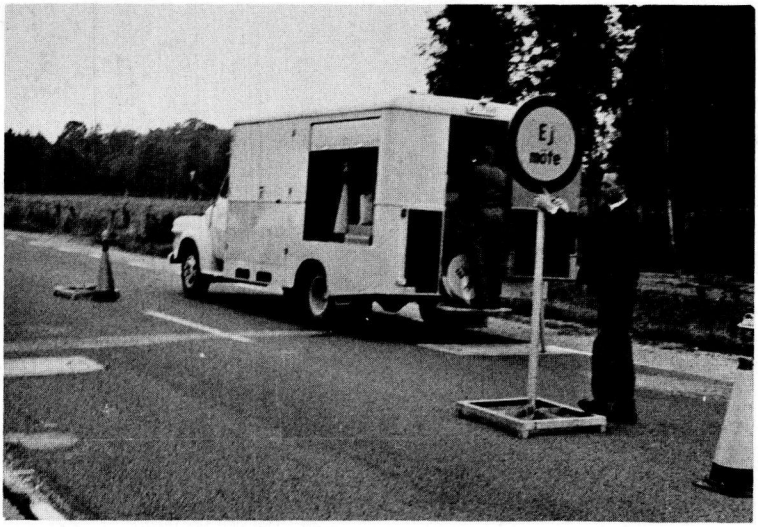

Figure 17. Lorry, specially built for transport of weighing equipments.

A	B	C	D	E	F	G	H	I	ANTAL SINGELAXLAR J AXELTRYCK AV 01 - 04	04 - 06	06 - 08	08 - 10	>10 ton	ANTAL BOGGIE K BOGGIETRYCK AV 01 - 10	10 - 12	12 - 14	14 - 16	>16 ton	ANTAL FORDON L BRUTTOVIKT 01 - 05	05 - 10	10 - 15	15 - 20	20 - 30	30 - 40	>40 ton
06	12	1	07	11	3	2	21	3	6										2	1					
						2	22	53	64	21	5		16						10	25	4	14			
						2	34	4	7	7	7		1							2	1				
						2	37	4	2	2				1	1			2			1	1	2		

Län A	Plats B	År C	Månad D	Datum E	Vecka F	Riktn. G	Fordons-H	Antal fordon I tt	ANTAL FORDON PER TID M RESP. ANTAL (FEL) TIMMAR 00 - 05	05 - 07	07 - 09	09 - 11	11 - 13	13 - 15	15 - 16	16 - 17	17 - 18	18 - 19	19 - 21	21 - 24	N Ton
06	12	1	07	14	6	1	21	12		1	6	1	1	2	1						42
						1	22	43		1	10	6	10	4	5	1	1	3	2		291
						1	33	1				1									3
						1	34	10	1		1		7	1	2	1	2				43
						1	37	1			1										11
						1	41	2		1								1			37
						1	46	5		1				1			1				55
						1	49	3	1	1					1				1		63
						1	51	1												1	29
						1	59	1											1		41
								79	2	5											
06	12	1	07	14	6	2	21	5													
						2	22	36	2	7											
						2	34	7													
						2	37	1	1												
						2	41	1													
						2	46	6													
						2	49	1													
						2	59	1													
								58	3	2											
06	12	1	07	15	7	1	21	4		7											
						1	22	38		3											
						1	33	1													
						1	34	7		1											
						1	46	2													
								47		6											
06	12	1	07	15	7	2	21	2													
						2	22	26	1	1											
						2	34	4	1	1											
						2	46	2		1											
								34	2	3											
06	12	1	07	16	1	1	21	1													

A. County
B. Site
C. Year
D. Month
E. Day
F. Day of the week
G. Direction
H. Vehicle type code (fig. 12.)
I. Total number of vehicles
J. Numbers of single axles in different axle load classes
K. Numbers of bogies in different bogie classes
L. Numbers of vehicles in different vehicle weight classes
M. Numbers of vehicles per time interval
N. Total vehicle weight

Figure 18. Results of axle load measurements.

An analysis of the statistical data collected from field studies and from the register of motor vehicles will provide a basis for computing the total unladen weight $T_{est.}$. This analysis is not yet completed. Preparatory investigations have shown that the mean unladen weight $\bar{t}$ in each group of vehicles in Figure 12 is relatively constant. This is in part due to the condition that the heavy lorries, more than about five metric tons in gross laden weight, have in general a wheelbase, l, that is longer than 3.5 m (11 ft 6 in.). The unladen weight of these vehicles is generally about 3 times as great as that of light and medium vehicles having a gross laden weight below about five metric tons and a wheelbase shorter than 3.5 m (11 ft 6 in.). In the axle load measurements, as already mentioned, these two substantially different groups of vehicles are differentiated by means of marks that indicate whether the wheelbase of each individual vehicle is longer or shorter than 3.5 m (11 ft 6 in.). Accordingly, the estimated total unladen weight can be written

$$T_{est.} = n_1\bar{t}_1 + n_2\bar{t}_2 + \ldots \tag{2}$$

and the estimated total pay load can be written

$$L_{est.} = B_{obs.} - (n_1\bar{t}_1 + n_2\bar{t}_2 + \ldots) \tag{3}$$

in which

$n_1, n_2, \ldots$ = number of vehicles in the groups of vehicles 1, 2, ... passing weighing site in direction of travel under consideration during a given period of time (numbers obtained from axle load measurements),

$\bar{t}_1, \bar{t}_2, \ldots$ = estimated mean unladen weight in the groups of vehicles 1, 2, ... in a given geographic region.

Estimation of Total Vehicle Weight from Traffic Count Data

A study has been made to find out whether the estimated total vehicle weight of lorries in both directions of travel $B'_{est.}$ can possibly be determined from the numbers of vehicles and the mean vehicle weights in various groups of vehicles passing the weighing site.

This estimate was formed by means of

$$B'_{est.} = n'_1\bar{b}'_1 + n'_2\bar{b}'_2 + \ldots \tag{4}$$

in which

$n'_1, n'_2, \ldots$ = number of vehicles in the groups of vehicles 1, 2, ... passing weighing site in both directions of travel during a given period of time (numbers obtained from traffic counts),

$\bar{b}'_1, \bar{b}'_2, \ldots$ = mean vehicle weight in the groups of vehicles 1, 2, ... in both directions of travel in a given geographic region (weights obtained from axle load measurements).

The estimated total vehicle weight $B'_{est.}$ was computed on the basis of the data collected from axle load measurements at 29 weighing sites, which were made during the tests on the scale equipments. The percentage ratio of the estimated total vehicle weight $B'_{est.}$ to the observed total vehicle weight $B'_{obs.}$ measured at the same time, $B'_{est.}/B'_{obs.} \times 100$ percent, is shown in Figure 19 for the various weighing sites. The width of each rectangle in this diagram expresses the observed total vehicle weight per weighing site. Each rectangle is marked with a letter indicating the county in which the weighing site in question was situated.

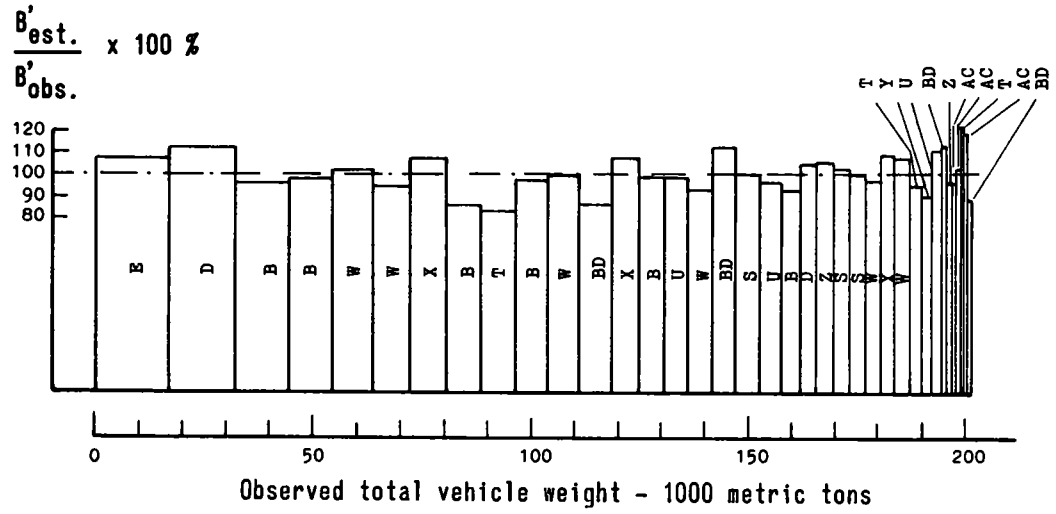

The base of a rectangle expresses the observed total vehicle weight at the weighing site.

Figure 19. Ratio of estimated and observed total vehicle weight at different weighing sites (letters indicate counties).

Figure 19 shows that the differences between the estimated and observed values of the total vehicle weight are relatively small. Consequently, the total vehicle weight estimated by the aid of Eq. 4 complies with the requirements concerning the accuracy in measurements which need to be fulfilled in determining this weight. The values observed at certain weighing sites in the tests on the scale equipment can involve systematic errors. Therefore, there is reason to suppose that the data based on measurements carried out by means of the scale equipment that is now ready for use will exhibit smaller differences between $B'_{est.}$ and $B'_{obs.}$

Estimation of Total Pay Load from Traffic Count Data

The estimated total unladen weight in both directions of travel is given by

$$T'_{est.} = n'_1\bar{t}_1 + n'_2\bar{t}_2 + \ldots \tag{5}$$

Replacing $B_{obs.}$ by $B'_{est.}$ and $T_{est.}$ by $T'_{est.}$ in Eq. 1 and substituting Eqs. 4 and 5 in Eq. 1 yields an expression for the estimated total pay load in both directions of travel:

$$L'_{est.} = n'_1(\bar{b}'_1 - \bar{t}_1) + n'_2(\bar{b}'_2 - \bar{t}_2) + \ldots \tag{6}$$

This means that the estimated total vehicle weight $B'_{est.}$ and the estimated total pay load $L'_{est.}$ in both directions of travel can be computed if certain constants and the numbers of vehicles in the various groups of vehicles (n'_1, n'_2, ...) are known.

Preparatory investigations indicate that the constants entering into these computations are applicable in large geographic regions.

The number of vehicles in each group of vehicles can of course be counted manually, but this procedure is not appropriate for economic reasons, among others. With a

view to enabling these computations to be made with the help of data-processing machines, a vehicle-differentiating traffic counter is being designed at the National Swedish Road Research Institute.

In conjunction with a vehicle-differentiating traffic counter, the methods of estimation outlined can be an extremely valuable aid in traffic measurements, particularly as a supplement to axle load measurements.

Vehicle-Differentiating Traffic Counter

Tests have been made on a prototype of a vehicle-differentiating traffic counter which can determine not only the number of vehicles passing a point of observation in both directions of travel during a certain definite period of time, but also in some respects the types of vehicles. The principles of this traffic counter are based on the fact that the differences in the transport functions of the vehicles are reflected in the number of axles and in the spacing of axles.

Every effort is being made to insure that this traffic counter is small sized so as to be easily transportable. It will be battery operated. It is primarily intended for use on two-lane roads, but its design is such that it can also be employed in a modified form on roads having several traffic lanes in each direction of travel. The results of measurements will be automatically transferred to a tape, and all computations will be made in data-processing machines. The principles of this traffic counter were evolved by the author and by Bjorn Kolsrud, who is also on the staff of the Institute. Patents covering these principles have been applied for.

General Discussion

VINCENT MCBRIDE, Consulting Engineer, Lebanon, Conn.

• OF THE components involved in highway electronic safety systems the performance and reliability of the electronic equipment is probably better established than that of the passive wiring elements embedded permanently in the pavement.

Valuable experience had been gained in the related field of wiring for flush-mounted centerline lights in airport landing strips over the past several years. With the cost of the wiring material being only about 1 percent that of the lighting units it is unfortunate that inadequate, ordinary wire has been used in a number of installations because the cost of failures and replacement is very high.

A special type of wire designed specifically for the installation and operating conditions involved costs little more than ordinary wire and it has the high degree of reliability that is essential to such systems. When trial installations of highway electronic safety systems are made it is vital that suitable wiring components be used.