# REFLEX REFLECTOR PERFORMANCE CRITERIA

D M. Finch, Associate Engineer
Institute of Transportation and Traffic Engineering
University of California

## SYNOPSIS

There has been an increasing interest in the field of reflex reflector photometry during the last few years because of the tremendous increase in the number of these devices that are used for roadway delineation and motor vehicle marking. Reflex reflectors are special types of mirrors which have the characteristic of returning a substantial fraction of the incident light toward the source from which it originates regardless of the incident angle. Because of their peculiar optical characteristics reflex reflectors appear very much brighter than even the best of white paints when illuminated under similar conditions and are thus very useful in marking roadway obstacles.

There are a number of different types of reflex reflectors, and each type has its own set of optical properties. It is necessary for reflectors to meet minimum performance specifications which have been drawn up by several purchasing and enforcement agencies. Because of the differences in the optical properties of various types of reflectors and the different methods of evaluation of these devices, a situation has developed in which the measurements among different laboratories do not always agree. This situation has prompted the investigation that is reported in this paper.

A review of the visual methods of appraisal has been prepared together with typical data showing the variations found when the human eye is used as a measuring instrument. A Photoelectric photometer is described which permits the physical measurement of the light flux from reflex reflectors when they are used under conditions which approximate field usage. A study of the variables affecting the measurements has been made using the photoelectric device. Data are shown for the changes in specific intensity when the different types of reflectors are used under varying conditions of divergence angle, entrance angle, orientation angle, test distance, size of light source, size of reflector, size of receiver and color of light source. It is shown that the geometry of the test set-up and the color of the reflector are quite important when measurements among laboratories are to be compared. A recommended test procedure based upon standardized conditions is outlined.

During the last few years there has been an increasing interest in the field of reflex reflector photometry because of the very large number of these devices used for marking roadway obstacles and vehicles. Reflex reflectors are special types of optical mirrors which have the characteristic of returning toward the light source a substantial fraction of the light that is incident on the reflex reflector, regardless of the angle at which the light strikes the device. Thus a reflex reflector is different from an ordinary mirror because of the direct return characteristics of the beam. Such devices are very helpful in marking roadway obstacles, delineating the sides of roadways and in acting as warning devices for parked vehicles or otherwise unlighted obstructions because these reflex areas will appear to be many times brighter than even the best white paints when illuminated under similar conditions.

There have been a number of different types of reflex reflectors developed during the past twenty years. Each type of device has somewhat different optical characteristics, but all have the same basic function. Therefore in practice it has been a problem for highway designers, motor vehicle equipment engineers, safety engineers and enforcement officials to decide upon the type of reflex unit to use for a particular application and to prescribe the performance requirements for the device. As a result of this situation a number of different specifications have evolved and a number of different testing techniques have resulted. The present status then is that a manufacturer of a reflex device may find that his device may comply with specifications when tested with one technique but may be much below specifications when tested with another technique. This is a very disturbing situation for both manufacturer and user of the device.

Before reviewing the existing techniques that are available for making measurements on reflex reflectors, it is perhaps best to review the developments that have occurred since the first devices were commercially manufactured. The original ideas associated with the design of reflex units are quite old and probably go back to the first observations of the eyes of wild animals at night when the observer was sitting close to a fire in the woods at night. In this case the lens of the animal's eye and the retina of the eye act as a redirecting optical system which returns part of the incident light in the same general direction as it came. Therefore the observer sitting near the fire could see a virtual source of light in the animal's eye which was really a reflection of the light source near which he was sitting. This idea was incorporated in the first lens mirror button type of reflex reflectors that were developed (see Fig. 1). A complete description of

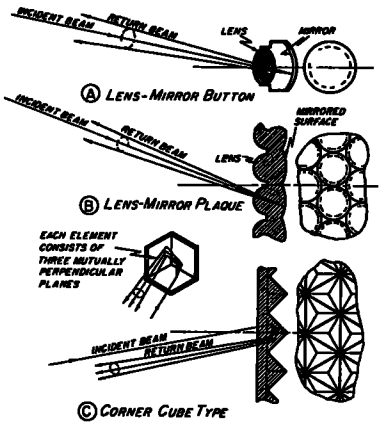


FIG 1-TYPES OF REFLEX REFLECTORS

the optical properties of these devices will not be given here but can be obtained by reference to the literature. (1)[1] The lens mirror button system was then extended to an all glass plaque in which the lens and mirror were cast on one base with the rear surface of the plaque coated with a reflecting material such as silver or aluminum. Another type of optical device developed at about the same time employed the principle of the parallel return of the reflected beam from three mutually perpendicular plane mirrors. This may be thought of as the corner of a cube and devices using this principle are generally re-

[1]Figures in parentheses refer to references listed at the end of the paper.

ferred to as corner cube reflex reflectors. The reflector may employ a single large corner cube or may consist of a mosaic of a large number of small elements.

The original designs all employed glass refracting materials and in the automotive and highway field these elements were generally used as cast or molded. Because of economic considerations, it was generally not possible to use polished optical parts. Therefore, because of the slumping and shrinkage characteristics of molded glass parts it was not possible to obtain high optical precision. Thus the first reflex units generally had a return light pattern which was spread out over relatively wide angles. It may be noted that the intensity of the return beam of light is dependent upon how tightly packed the return flux is within a small cone angle. As the cone angle of the return flux is made smaller and smaller, the intensity of the light increases. This is similar to the condition that prevails when water is forced through a nozzle. If the emitted water cone is large, the water is not projected very far; but if the nozzle is adjusted to restrict the solid cone to a small jet the water will be projected to a much larger distance.

The material used for all of the reflex elements manufactured up to about 1939 was molded glass and therefore had the generally wide angle returned light pattern. Since 1939 plastic materials have been used to a greater extent for reflex devices; and, since the molding characteristics of plastic are very much different than those of glass, it is possible to make large volume production moldings out of plastic which have extremely high optical precision. Thus during recent years there has been a general change in the light distribution in the returned beam from reflex reflectors. It is now possible to have a reflex unit so well made that a device would not be effective as an automotive signal because too much of the flux would be returned exactly co-incident with the source of light. We need therefore to review the performance of reflex reflectors to be certain that the devices function in a manner which will be suitable for the service for which they are intended.

The original specifications for reflex units were primarily written for automotive marking devices. Therefore, the range of visibility distances that were considered important were in the order of fifty feet to five hundred feet. As these devices began to be applied to highway obstacles it was generally agreed that longer visibility ranges were important. There are applications in which reflex reflectors are being applied to informational signs, to large area obstacles and for advertising purposes. Under these latter circumstances it is desirable to have materials which have wide angle return light characteristics and also which will accept wide angles of incident light. Thus there appears to be a need for devices and specifications covering three different types of services - namely, long range visibility, intermediate distance visibility, and wide angle visibility.

*Present Status of Reflex Testing* -Testing techniques have been developed to give a measure of the visibility distances and the over-all efficiency of reflex devices. The systems incorporate ideas associated with visual brightness balancing, visual balancing of the total light flux, and photoelectric measurement of the light flux within restricted directions, and photoelectric balancing of the total reflected light flux. These various procedures give results that are subject to different interpretations. For instance, a technique that evaluates the total return flux from a reflector may give a measured value that is identical for two different makes of devices, but because the distribution of the return light is different in these two devices the roadway appearance of the units may be entirely different. Similarly, a technique which presumes to evaluate the long range visibility may give results on two devices that are markedly different but when field tests are made the units may appear to be very similar. Thus it is highly desirable to

analyze the variables in the testing techniques so that a method may be evolved which will satisfactorily appraise various types of reflectors for any service to which they may be subjected.

The early testing techniques were developed around a visual comparison between a standard lamp and a reflex reflector. The schematic arrangement for such a set-up is shown in Figure 2.

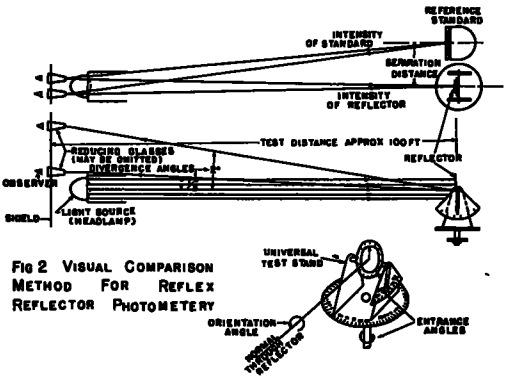


FIG 2 VISUAL COMPARISON METHOD FOR REFLEX REFLECTOR PHOTOMETERY

A procedure of this type was outlined in the S. A. E. "Handbook of Recommended Practices" as long ago as 1936. This procedure established observation stations at divergence angles of 1/3 deg. and 2 deg. and thus recognized the importance of intermediate signaling distances up to 500 ft. as well as the shorter range and wide angle visibility requirements within 50 ft. During the initial phases of the establishment of these S. A. E. specifications there were inter-laboratory comparisons made to determine the adequacy of the method and the precision with which results could be duplicated. The devices that were used as reference standards and as inter-laboratory checking samples were made of glass and had the characteristics of glass units that have been previously referred to, namely, relatively wide angle return flux distribution and transmittance characteristics that were similar to the filters on the comparison standards. It was therefore possible to obtain what was considered to be reasonable inter-laboratory checks using this system (total variation of approximately 30 percent). When the newer plastic materials were substituted for glass however, it was observed that the differences among the laboratories increased almost immediately. This has led to the present examination of the problems involved.

## PROBLEMS OF MEASUREMENT

As a first consideration in the photometry of reflex reflectors, it is necessary to examine the magnitude of the light flux that is available for measurement. In general, reflex reflectors for automotive and highway service are illuminated with very low densities of light flux. For example, a reflex reflector on a truck at 500 ft. may have as much as 0.10 f.c. illumination considering that the truck is in the main portion of a sealed headlamp beam. If it is out of the main portion of the beam as is most likely then this value may drop to 0.01 f.c. or even very much less. If the reflector is being used for roadway delineation the illumination at 1000 ft cannot possibly exceed approximately 0.06 f.c. and is generally very much less than this value. Even at distances of 100 ft. or less from a pair of automobile headlamps the illumination will not ordinarily exceed 0.50 f.c. because at these distances and at the usual mounting positions the reflector is out of the high intensity portion of the headlamp beams. Therefore, it is an unusual case when a reflector would have as much as one f.c. illumination as prescribed by the S. A. E. standard test procedure. With such low levels of illumination as previously mentioned and considering the inherent inefficiency of devices of this type, particularly the colored reflex reflectors, it is at once apparent that the light flux available for measurement is extremely small. Consider, for instance, a three inch diameter crystal reflector at 100 ft. with 0.50 f.c. illumination. The total flux received by the reflector would be approximately 0.024 lumens. If the device has an overall efficiency of 50 percent and returns the light flux within a 1-deg. cone angle, the average inten-

sity would be 0.50 c.p. At 100 ft. this candle power would produce 0.00005 f.c. illumination. The small amount of energy available for measurement led to the establishment of the visual techniques because it has only been within recent years that even reasonably stable high sensitivity photoelectric devices have been available for making such measurements.

The visual technique of making measurements will be described in some detail in order to emphasize the variables that are involved and the controls that are required if duplication of readings is to be obtained. In order to discuss the quantities to be measured and controlled, it is necessary to define some of the special terms that are used in the photometric procedure. It will be helpful to refer to Figure 2 for a clarification of the following terms.

*Specific Intensity* - the candlepower of the reflector per foot-candle of incident illumination on the reflector. The intensity (candle power) of the reflector will be directly proportional to the incident light flux density (foot-candles) so for reference it is convenient to refer all intensities to a unit illumination.

*Divergence Angle* - the angle at the reflector between a line through the center of the light source and a line through the observer position. This is used to measure the distribution of light in the return beam.

*Entrance Angle* - the angle at the reflector between the line through the center of the light source and the normal to the plane of the reflector. This is used to measure the effectiveness of the reflector when illuminated from different directions.

*Orientation Angle* - the angle in the plane of the reflector between a reference mounting position and the angle through which the reflector may be rotated about its normal axis. This is used to measure the effectiveness of the reflector when mounted in different rotational positions.

Measurements at these three angles will, in general, determine the characteristics of the reflex reflector. There is one other angle, the azimuth angle, which may be important in some cases. This angle refers to the position of the observer's eyes with respect to the light source. The observer may have his eyes at any of the reference positions indicated by the hands of a clock when viewing the reflector from behind a headlamp. For instance, the normal observation position is at 12 o'clock. The location, however, may be at 3 o'clock, 6 o'clock or 9 o'clock or at any of the other intermediate positions. For most reflectors, this is a relatively unimportant variable, but it may be necessary to consider it in some cases.

There are four main parts of the set-up that need to be examined in visual testing: (1) the light source, (2) reflex reflector, (3) reference standard, and (4) the conditions at the observation station.

First let us consider the variables associated with the light source. The factors that can change are: (a) the color temperature which affects the spectral distribution, (b) the size, and (c) flux density distribution within the beam.

At the reflex reflector, we have the following variables to consider: (a) the pattern of the return light flux. This is associated with the optics of the design, (b) the materials from which the unit is made. This will normally involve either transparent glass or transparent plastic materials. It may be noted that plastic materials are subject to polarization which may further complicate a testing procedure; (c) the color of the return flux. This will have to be given critical attention, particularly since plastic materials have entirely different types of transmittance curves than do glass units; (d) the surface conditions of the reflector. Solarization and aging will require that new and weathered devices should be examined; and (e) the orientation of the reflex both for entrance angle and orientation angle.

The reference standard should be completely specified as to: (a) the

details of its construction and its calibration; (b) the size and methods of varying the size may be important; (c) the method of variation of the light in the standard will be extremely important. Thus, if current variation is used a change in color may result whereas if a change of distance is used the size may vary. There are methods of avoiding both of these difficulties that will be described later; (d) the transmittance characteristics of the color filters employed on the standard will have to be known and specified; and (e) the separation distance between the reflector and the comparison lamp should be given.

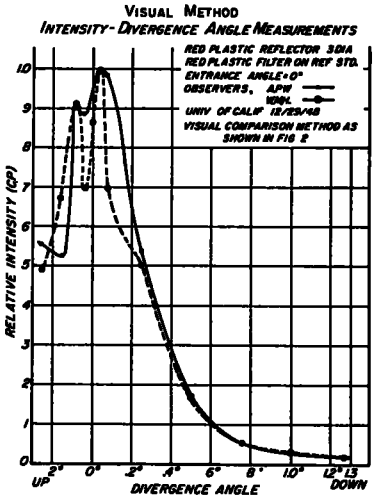


Fig 3

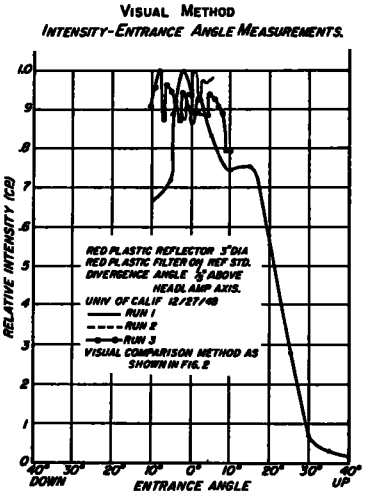


Fig 4

At the observation station the important variables will be: (a) the test distance, (b) the divergence angle, (c) the size of the reflector, (d) monocular or binocular vision, (e) the use of optical enlarging or reducing lenses, (f) the adaptation level of the observer must be considered since visual spectral response functions as well as visual sensitivities vary from one adaptation level to another, and (g) the method of making the comparison, that is the method of balancing the standard against the reflex, must be specified. It is possible to vary either the reference standard or the reflector. Both systems are being used. The standard may be varied by the use of current changes, rotating sector discs, neutral filters or distance changes. The reflex reflector may be varied by changing the aim of the headlamp, changing the current in the headlamp, use of rotating sector discs in front of the headlamp, or by the use of neutral filters.

The mere listing of all of these quantities indicates the complications that can arise because of the possible combinations of all of the variables. It is necessary therefore to isolate the effect of these different variables to determine which are important and which may be set aside as unimportant. It is believed that the differences that are reported in the measurements among the different laboratories are largely due to the differences in the techniques and the laboratory set-ups that are used. This has become quite evident in recent months during which time a set of reference standard reflectors has been re-circulated among the laboratories for a re-evaluation of their systems. The initial test results yielded the expected wide variations, but as more re-tests were made and as each laboratory became familiar with the procedures used in the other laboratories the results began to be more consistent. (Refer to Appendix A.)

In an attempt to isolate the effects of the above variables a series of studies were inaugurated using the conventional

visual appraisal methods. Data were taken to attempt to evaluate the divergence angle characteristics of different types of reflectors, the effect of entrance angle, the effect of test distance, the variations that resulted from a change in size of source, size of reflex reflector, and size of the receiver. Other tests were made to attempt to isolate the effect of color and the effect of the separation distance between the reflex reflector and the comparison standard. Typical data on the results of these visual observations are given in the curves of Figures 3, 4 and 5.

These data are reported because they represent the results of carefully controlled attempts to visually evaluate the variables mentioned. It was felt that, after studying the data and after a review of all of our past data and experience with the visual technique, the only reasonable conclusion that can be drawn from the data in these figures is

FIG.5 VISUAL METHOD - DATA

INTENSITY VS { LEVEL OF ILLUMINATION, TEST DISTANCE, USE OF REDUCING GLASSES, MONOCULAR & BINOCULAR VISION }

3 IN CRYSTAL PLASTIC REFLECTOR - WHITE REF STD.

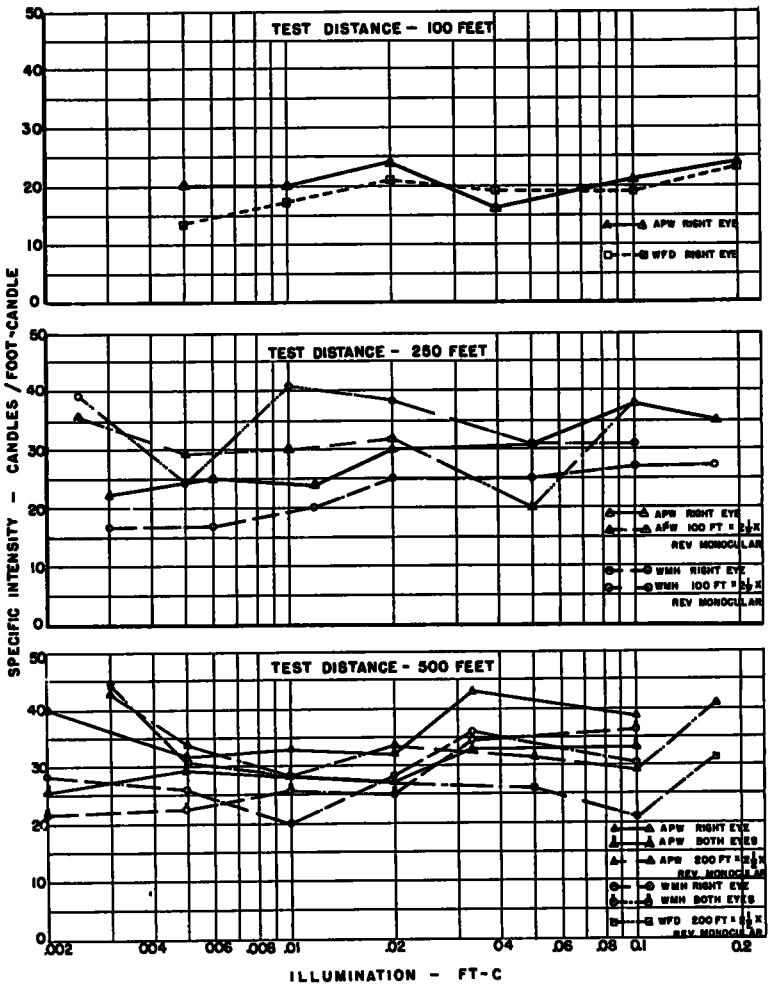

that the variations among observers and the variations in the data of each observer are so large that the effect of the variable being investigated is not apparent. Some trends are indicated, such as the change of apparent intensity with distance, but because of the large scatter it was felt that such trends should not be considered. These data show the problems of visual heterochromatic photometry at extremely low levels of adaptation. Other researches at low adaptation levels have corroborated these results. It is generally conceded that duplication within ± 15 percent of the mean is all that may be expected. Such tests as shown together without past experience in the laboratory, are the basis for the general policy of using a 30 percent tolerance on the minimum specifications. The scatter of the data obtained by the visual technique also clearly point to the need for a satisfactory physical method for making reflector measurements.

## A PHYSICAL REFLEX REFLECTOR PHOTOMETER

The design specifications for a physical photometer to measure reflex reflectors were set up from ground rules established to measure the performance of all types of reflectors as follows: (1) The photometer should permit an evaluation of a reflector for any type of service to which it may be subjected. (2) The instrument should be capable of measuring a minimum performance device at the greatest entrance angle and largest divergence angle to which it may be reasonably expected to be used in service. This was arbitrarily set at a specific intensity of 0.01 candle power/foot-candle at a 2 deg. divergence angle and at an entrance angle of 30 deg. (3) The receiver of the photometer should not be any larger than the lens of an average eye and should be located at least 100 ft. away. (4) The photometer should be used in such a manner that the color response of the receiver will not be important or else the color response should be corrected to that of the average photopic eye. (5) The device should be readily calibrated and should be stable within the period required for a test. (6) Range changing means should be provided so that maximum performance reflectors as well as minimum performance devices can be evaluated. (7) The divergence angle measuring means should permit measurements taken between 0.10 to 2.0 degrees.

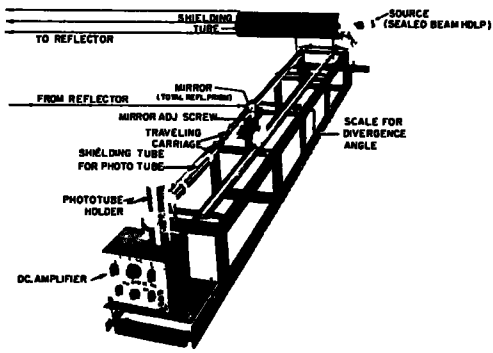


Fig 6—Reflex Reflector Photometer

Such an instrument was constructed and is shown in the photograph of the equipment in Figure 6. A schematic diagram of the test setup is shown in Figure 7. For reference a circuit diagram is given in Figure 8 and calibrations of the equipment for both sensitivity and color response are shown in Figures 9 and 10. An analysis of the electrical circuit is not required for this paper, but it may be stated that the circuit has permitted the sensitivity requirements set forth in the ground rules to be readily obtained. Furthermore, the circuit is very stable and is quite insensitive to fluctuations in battery voltage or filament current. The photo-electric device shown has been a major development of this research investigation. It should be pointed out that, while the sensitivity and stability are quite satisfactory, the color response is not adequate for use of this instrument as an absolute device for measuring luminous flux. The photometer is only satisfactory if used as a comparison device in which the flux to be measured and the calibration

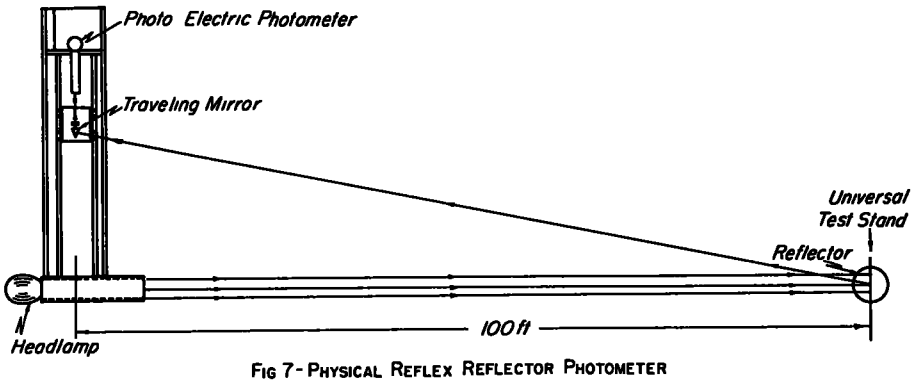


FIG 7 - PHYSICAL REFLEX REFLECTOR PHOTOMETER

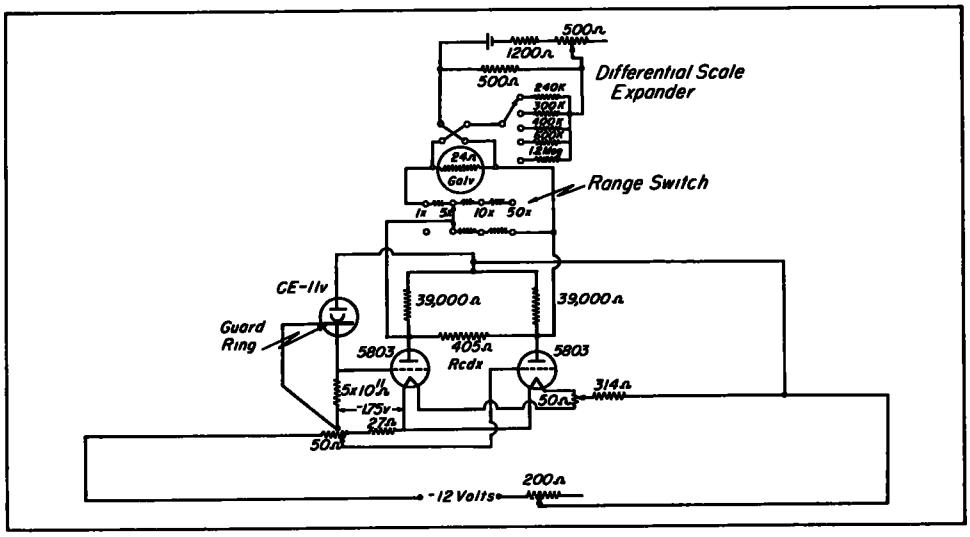


FIG 8-CIRCUIT DIAGRAM - PHOTO TUBE AMPLIFIER

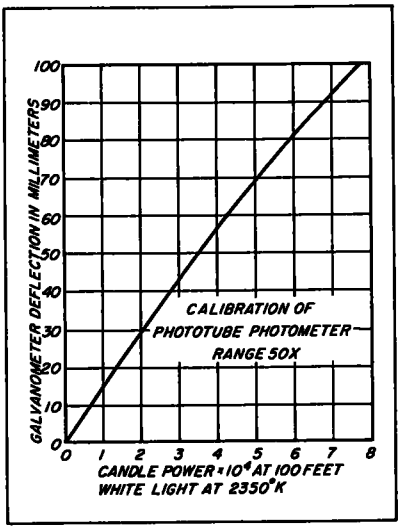


FIG 9 - CALIBRATION PHOTOTUBE PHOTOMETER

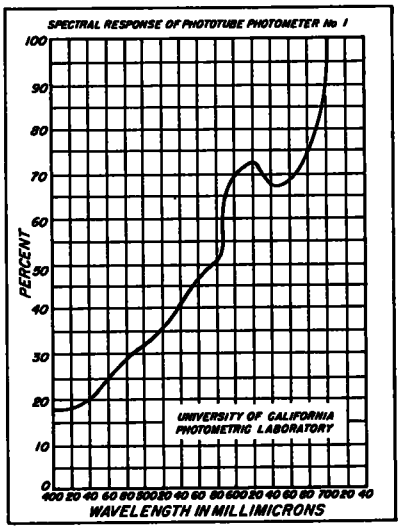


FIG 10-COLOR RESPONSE -PHOTOTUBE PHOTOMETER

source have the same spectral distribution so that the color response characteristics cancel out. The method of measuring the intensity at different divergence angles is shown in Figures 6 and 7. By the use of the traveling mirror on the track the photometer can be mounted permanently and aligned carefully with respect to the headlamp. The divergence angle characteristics can be obtained for any position of the reflex reflector within a few minutes with such an arrangement. Thus it is possible to carefully analyze even the lowest output reflector at distances and under conditions which can be made to truly represent field performance.

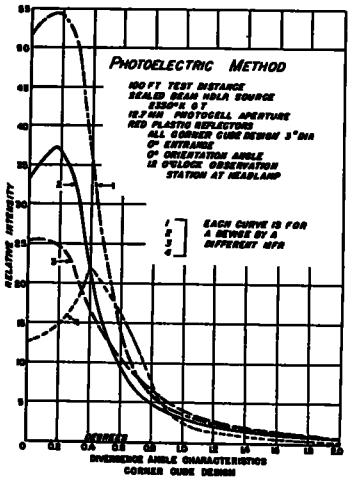


FIG 11

## CHARACTERISTICS OF REFLEX REFLECTORS

The physical distribution photometer described above has been used to isolate the reflex reflector variables that were mentioned in connection with the visual technique. By the use of this physical instrument, the scatter of the data that was previously reported for the visual techniques can be eliminated. Therefore, the effects of each variable can be shown.

*Divergence Angle* - It was first considered desirable to determine whether or not differences in return flux distribution could be observed from different optical designs of reflex reflectors. Several devices representing all types of commercially available reflectors were measured. These results are shown plotted in Figures 11 and 12, and represent corner cube construction, lens mirror construction, and beaded surface types. It may be noted from the curves that the divergence angle characteristic of reflectors made by different manufacturers are substantially different, and that each general classification may be also differentiated from the other. In general, corner cube construction yields higher intensities at smaller divergence angles and at small entrance angles than does either the lens mirror or the beaded surface type. The lens mirror type is intermediate between the beaded surface and corner cube designs in this respect.

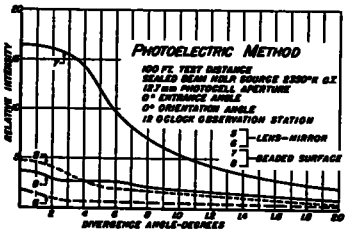


FIG 12 - DIVERGENCE ANGLE CHARACTERISTICS

The divergence angle characteristics of a reflector will determine the type of service for which it is best suited. Devices that have high specific intensities at small divergence angles (0.10 deg. to 0.33 deg.) are suited for long distance signaling as in roadway delineation. Devices which have moderately high specific intensities at divergence angles in the order of .33 deg. to 1.0 deg. will be better suited to intermediate service applications such as in automotive equipment. These devices should also hold up reasonably well in specific intensity at divergence angles as great as 2 deg. For the type of service required in signing and advertising or in marking large areas the divergence angle characteristics may be very much more uniform, between 0 deg. - 4 deg. For such service the intensities at large entrance angles should also hold up very well.

*Entrance Angle* - The effect of changing the entrance angle is shown in Figure 13 for several types of commercially manufactured reflex units. The type of construction is indicated on the curves in the figure. It may be noted that the entrance angle characteristics show a larger percentage change between 0 deg. -30 deg. for corner cube construction than for lens-mirror types, but the total amount of light reflected by corner cube devices is generally much more than for other types even at large entrance angles.

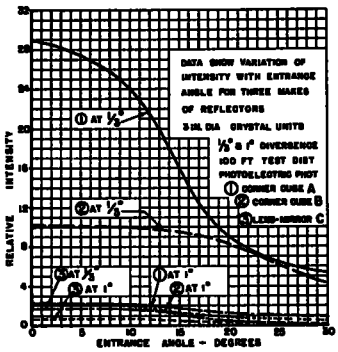


FIG 13 ENTRANCE ANGLE CHARACTERISTICS

*Orientation Angle* - In studying the light distribution of the return beam from various types of reflectors, it has been noted that the flux is not generally symmetrical about the axis of the return beam. In some cases the pattern consists of bundles of distinct rays emitted in the general direction of the source of light. Thus, if the plane of measurement at different divergence angles happens to be through one of the regions of high light flux, the values of specific intensity will be high; but if the device is rotated about its normal axis the plane of measurement at different divergence angles may fall in a region of very little return light flux. Data on these effects are shown in Figure 14. As shown, some devices may have a symmetrical pattern while others may be completely asymmetric. It is important to note that if a device has an asymmetric pattern it is extremely important to have the device oriented properly in its mount in order to perform satisfactorily.

*Test Distance* - There has been considerable speculation in the effect of test distance on the measurement of specific intensity. Normally, the distances encountered in the field are greater than 100 ft., but because of laboratory space and the dimensions of available darkened areas it has usually been necessary to reduce the laboratory test distance to 100 ft. or less. The test distance is considered to be important largely because of the change in the geometrical relationships among the optical parts rather than because of the

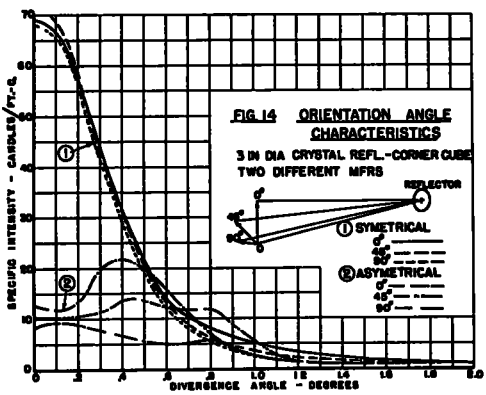


absorption and scattering effect of the atmosphere. For very long ranges and under adverse weather the latter may be quite important. In order to evaluate the effect of test distance, measurements were made on the same units at different distances under controlled conditions. The data shown in Figure 15 give the results of these tests. These data may be summarized as follows: As the test distance is increased, keeping the size of reflector, light source and receiver size constant, the specific intensity at small divergence angles tends to increase. This is explained by the fact that the change in geometry causes the receiver to evaluate a smaller spread of divergence angles as the distance increases. The receiver will give an average value for the complete bundle of rays that it intercepts. For instance, at a 100 ft. test distance using the sizes of elements shown in Figure 13, the specific intensity reported at a setting of 0.33 deg. represents an average of the flux between 0.17 deg.

to 0.50 deg. divergence angles. At a 50 ft. distance the range of divergence angles measured would be from 0.00 deg. to 0.67 deg. and at 200 ft. the average would include divergence angles between 0.25 deg. to 0.42 deg. Thus for reflectors having a divergence angle-intensity curve with a steep slope, more representative measurements will be made at greater test distances. The data shown for the 25 ft. test distance are not considered to be reliable because of the difficulties in alignment, measurement of angles, and the non-uniformity of the illumination on the reflector. The values are probably too low but are generally in the right direction.

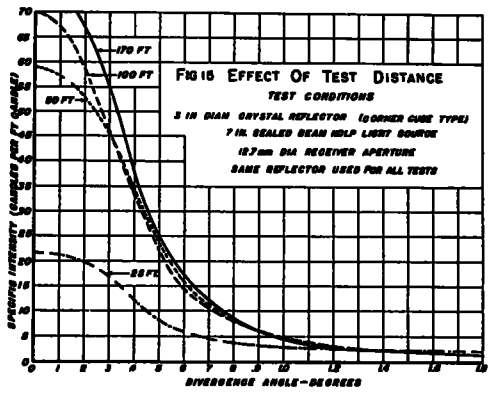


*Size of Light Source* - Since most reflex reflectors that are being discussed in this paper will be used under automotive service conditions, it is proposed that an automotive type headlamp should be used as a source. Here again because of laboratory arrangements it may be more expedient to use a different light source having a different beam distribution and a different size of aperture. The effect on the specific intensity of changes in size of light source are shown in Figure 16. These data may be interpreted as follows: The results are similar to a change in test distance. As the size of source is reduced, other conditions remaining constant, the bundle of rays intercepted by the receiver includes a smaller range of divergence angles. The average value of the intensity in the region of the curve where the slope is greatest, tends to be higher for the smaller divergence angle return beam from the small source than for the larger divergence angle return beam from the larger source. The overall effect is a decrease in the slope of the curve due to the averaging of overlapping relatively large cones of light coming from the larger source.

*Size of Receiver* - In actual use the receiver of the return flux from a reflector will be a motorist's eye. Thus for all observation distances in the field the size of the receiver is fixed by the dimensions of a normal eye. The eye

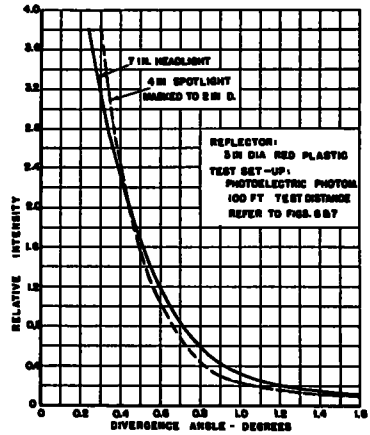


FIG. 16 EFFECT OF SIZE OF SOURCE

lens aperture is approximately 7 to 10 mm. diameter. In all evaluation techniques, except those employing direct binocular vision, the size of the receiver may not be the same as in typical service conditions. In most cases the receiver will intercept a substantially larger solid angle than is intercepted by the motorist's eye. This has an effect which is similar to changes in size of source, size of reflector or test distance. It is a matter of intercepting a different cone of light than is intercepted by direct visual appraisal. If a larger cone angle is received, the measurement will represent an average of a greater range of divergence angles than if a small cone is received. Data on this variable were not taken during this investigation because the effect of changes in receiver area would be

similar to those previously reported under Test Distance and Size of Light Source. All of the data were taken with a receiver having an aperture of 10 mm. diameter.

*Color of the Source* - The spectral distribution of the light flux may have a considerable bearing on the performance of a reflector. This effect may be expected to be large when colored devices are considered, but may or may not be so important when crystal or uncolored reflectors are being considered. The data showing the effect of changes in color temperature of the light source for crystal reflex units using the photoelectric photometer of Figure 6 are shown in Figure 17. The photo cell used in this photometer (Fig. 6) has a high response in the red re-

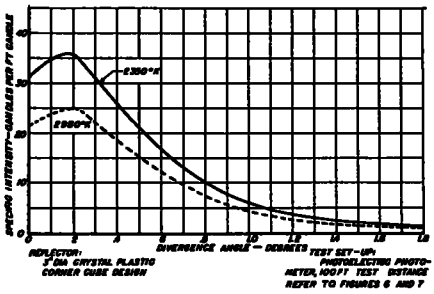


*FIG 17 EFFECT OF COLOR TEMPERATURE OF THE LIGHT SOURCE*

gions of the spectrum (Fig. 10). Therefore the apparent intensity under a low color-temperature source is higher than when measured with a high color-temperature source. To be usable for absolute measurements the photometer must be calibrated with a reference standard having the same distribution as the return beam from the reflector. This scheme is practical for un-colored reflectors but may not be possible for colored devices. It is proposed that a reference color-temperature of 2360 deg. K should be used for all reflex reflector calibrations. Most of the field observations of reflectors will be made under low adaptation levels in the region of the Purkinje shift in the visibility function. If a reference standard of 2360 deg. K is used the photopic visibility data may be applied. This has been the reference standard used to establish the conversion data to the scotopic region. (2)

*Color of Reflex Unit* - As previously mentioned, the transmission characteristics of the un-colored reflex reflectors may be sufficiently non-selective to permit measurements to be made with a fairly wide range of light source color temperatures provided that calibrations for the color temperatures are avail-

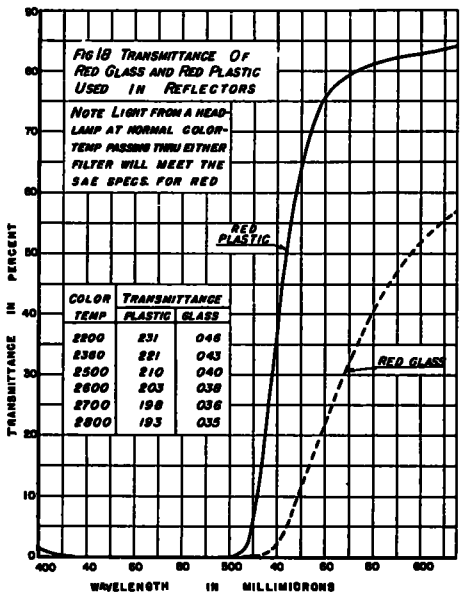


able. However, when colored glass or plastic materials are used the transmission characteristics of these materials are very different than for crystal reflectors and the uncolored calibrations cannot be used except for relative measurements. It should be pointed out that even though two colored lights appear to be the same insofar as their color sensation is concerned, the spectral energy distributions may be quite different. Thus, unless colored lights are appraised with a device that exactly duplicates the average visual response curve, the resulting measurements may not bear any valid relation to the visual appearance of the lights. This would indicate that if

physical measurements are to be made upon reflex reflectors, the measurements should all be made in terms of uncolored units. To evaluate colored reflectors it would then be necessary to determine the spectral transmittances of the colored materials and to calculate from these a factor to apply to the uncolored measurements. Typical spectral transmission data for materials used in reflectors are shown in Figure 18 together with the calculated transmittances for lights of various color temperatures.

that are or have been in general use. These are described briefly as follows:

*Visual -*

1. Modified Visual Method - The schematic diagram is as shown in Figure 19A. This system uses a short test distance but employs a mirror to obtain the recommended 100 ft. test distance. The illumination on the reflector is changed by placing apertures over the headlamp. The intensity of the standard is changed by varying the current through the reference standard.

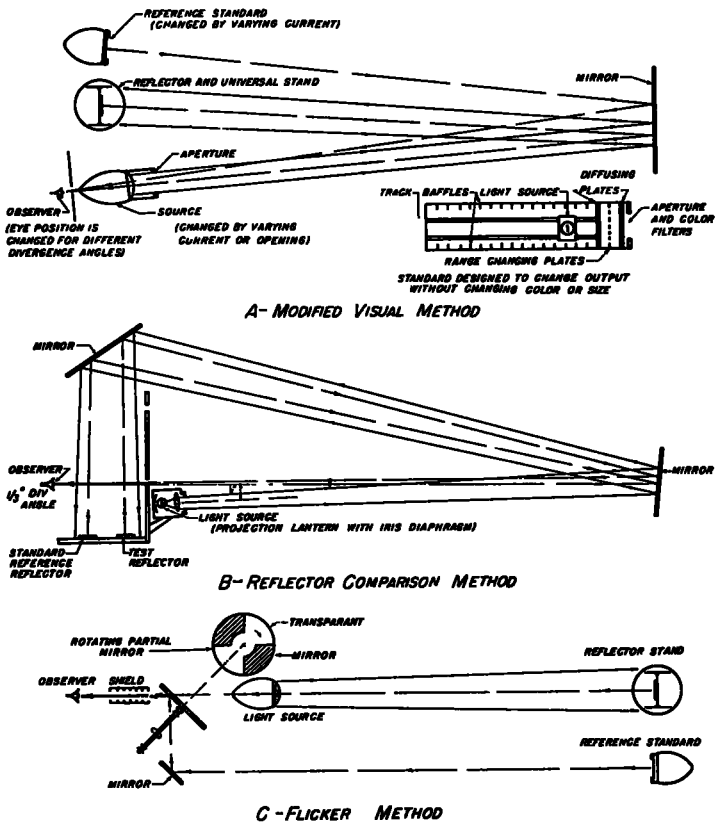


*Fig 19 Visual Comparison Methods*

## REVIEW OF EXISTING TEST PROCEDURES

In addition to the visual technique shown in Figure 2 as used at the Testing Agency for the California Highway Patrol at the University of California, there are a number of other techniques

The principal sources of error with this system are:

a. variations in the mirror,
b. changes in the size of source due to the apertures, and
c. changes in color of the source due to current variation.

These errors can be reduced to a minimum by using a good quality mirror; using a system of screens or other means to change the output of the source without changing the effective size; arranging the standard so that its intensity can be varied without changing either its size or current as indicated in Figure 19A insert. When these precautions are taken the technique is satisfactory if enough observations are made with a sufficient number of observers to obtain statistically reliable data. This is usually slow and costly.

2. Reflector Comparison Method - This visual system is shown in the sketch of Figure 19B. It is used as a production control technique and is suitable for selecting standard, above standard or below standard devices in comparison with a reference reflector. The 100 ft. or more test distance is obtained by the use of mirrors, and the reflex illumination is obtained from a projection lantern equipped with an iris diaphragm to change the amount of light As long as the objective is only one of comparison this method is quite satisfactory. A small size of source and a long effective distance will favor devices with a narrow divergence pattern and will permit a rapid selection of reflectors on this basis. The uniformity of the illumination over the test area is very important.

3. Flicker Method - This system uses optical arrangement which alternately permits the observer to view the standard and the reflex reflector using the same retinal region for appraisal (see Fig. 19C). Judgment of the equality of reflector and standard is made by adjusting the standard until the flicker is eliminated. This system would seem to have considerable merit in reducing some of the variations in the visual technique, but will suffer from the limitations that all visual techniques are confronted with - variations in visual judgments of observers. The flicker method was proposed by Van Lear but has not been used for laboratory testing as far as the writer is aware.

*Photoelectric -*

4. Single Source Method - The general scheme for this photoelectric method of evaluation is shown in Figure 20A and in Reference 3. The important items to consider in this design are the size of the light source, the size of the reflex reflector, the test distance, the size of the receiver and the response characteristics of the photo cell and amplifier. It is believed that unless all parts of the system are reduced in scale by the same scale factor, the results may not be comparable at all divergence angles to tests made at greater distances under conditions representing field performance. Also unless the photo tube is used as a comparison device the spectral response of the photo tube may introduce appreciable errors.

5. Multiple Source Method - This photoelectric test setup is shown schematically in Figure 20B. The factors to consider here are the averaging effect of the entrance angles, divergence angles, and orientation angles due to the multiple sources, the size of the receiver, the size of the sources, the size of the reflector and test distances. For measurements on area reflecting materials the size of the reflex test plate is necessarily large and therefore may be very important. The test equipment is easy to use for measurements at fixed divergence angles and may be satisfactory for testing for specific performance requirements, but the system does not appear to be universal and the data obtained may not correlate with other laboratory findings. This does not infer that the results are invalid. They may be entirely acceptable for the required measurements.

6. Overall Efficiency Method - This photoelectric system is shown schematically in Figure 20C and Reference 4. It is basically a method of evaluating the overall return beam of a reflector. The design is based upon the interception of the total amount of flux within a divergence angle of approximately 0.17 deg. to 1 deg. It is a method whereby large numbers of devices may be quickly evaluated for production control, but

cannot give a complete appraisal of field performance because of the lack of information on the divergence angle characteristics. It is possible for two different devices to have the same efficiency and still appear entirely different under roadway conditions.

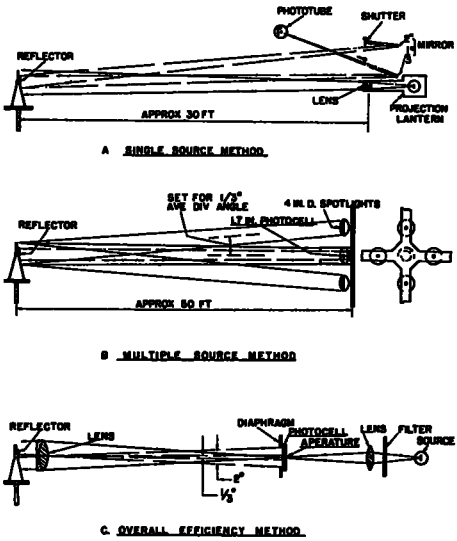


FIG. 20 PHOTOELECTRIC METHODS

## CONCLUSIONS AND RECOMMENDATIONS

The test data that have been assembled and presented in this report will permit several general conclusions to be formulated:

1. The results of any test procedure should give an indication of the field performance of the device for the particular service for which it is intended. The service classifications that should be covered by performance specifications are: (a) Devices intended for long distance signaling. Units such as roadway delineators and truck flares would fall in this classification. (b) Devices for general service at intermediate distances constructed to the best standards. This service would include the reflex units used for trucks, commercial vehicles, trailers and for the marking of roadway obstacles. (c) General service units designed for intermediate distances but built to secondary standards. This classification would include the reflectors built into the lenses of passenger car rear lamps, supplementary reflectors on passenger cars, bicycles, and other miscellaneous installations. (d) Reflex devices used as signs, large area markers, or advertising media. This service requires wide acceptance angles (entrance angles) and wide return angles (divergence angles) for the light flux.

2. The visual data reported clearly indicate the need for a physical method of making the measurements. There is inherently too much scatter in the data of each observer and too large a variation among observers for the visual system to be practical for commercial use. The visual technique may be entirely satisfactory provided sufficient precautions are taken to insure standardized measuring conditions each time the technique is used. The proper use of the method entails making a large number of observations and examining the results statistically.

3. For a complete specification of a reflex reflector complete data on the distribution of the return flux should be available. The method of making the measurements should be completely described so that the validity of the results may be appraised. Preferably the data should be collected under conditions that have been standardized.

4. In order to insure the satisfactory performance of reflectors, sufficient specification points are required in the divergence angle measurements, entrance angle measurements and orientation positions to be certain that the reflector can meet the service for which it is intended. At the present time the two S. A. E. test points at divergence angles of 1/3 deg. and 2 deg. for one orientation, and several entrance angles are not sufficient to indicate field performance under service conditions.

5. A recommended test procedure based upon a physical photometric method has been developed. This procedure is included as Appendix B and should define the test conditions sufficiently to permit all types of reflex reflectors to be evaluated for any type of service.

6. Recommendations for specific intensities of various types of reflex

reflectors for the four different service classifications are being prepared and will be submitted for consideration in the near future. This will be a matter for joint action by all of the interested agencies and should be governed by the determination of minimum visibility requirements based upon other studies.

## ACKNOWLEDGMENT

This material is the result of many hours of work and planning by the entire staff of the Testing Agency of the California Highway Patrol, the Institute of Transportation and Traffic Engineering, and by the engineers employed under University Research Grants and grants from the industry. Grateful acknowledgment is extended to these agencies. Particular credit is given to Messrs. A. P. Wagner, W. M. Heath, W. F. Dimmick, Basil Andrews, Lawrence Silva and J. T. Gier for their assistance in the collection of data and the development of equipment.

## REFERENCES

1. Van Lear, G. A., Jr., "Reflectors Used in Highway Signs and Warning Signals", *J. Optical Soc. Amer.*, V. 30, No. 10, pp. 462-487, October 1940.
2. Weaver, K. S., "A Provisional Standard for Low Level Photometry", *J. Optical Soc. Amer.*, V. 39, No. 4, pp. 278-291, April 1949.
3. Little, W. F. and Parker, A. E., "Photo Cell Photometry of Reflex Reflectors", *Illum. Engr.*, V. 37, No. 10, pp. 789-97, December 1942.
4. Bulletin of Photovolt Corp., "Reflector Button Tester", N. Y.
5. Finch, D. M., "Progress Report on Reflex Reflector Photometry", Engr. Proj. 56, Engr. Dept. Projects Office, University of California, Berkeley.
6. Society of Automotive Engineers, "S. A. E. Handbook", N. Y., 1949.

## APPENDIX A. INTERLABORATORY COMPARISON OF REFLEX REFLECTORS

A set of selected sample reflectors has been circulated among three of the principal laboratories that evaluate such devices for automotive service. This was done in order to determine the spread of values that might be expected due to the variations in laboratory procedures equipment and personnel. Specific inten sity measurements were made upon crysta and red plastic reflectors at 1/3° an 2° divergence angles. The results ar shown below.

| Device | Divergence Angle | Laboratory Position | H-V | 20°L-V | 20°R-V | 30°L-V | 30°R-V | H-10°U | H-10°D |
|---|---|---|---|---|---|---|---|---|---|
| | Degree | SAE Spec | 1.0 | 0.70 | 0.70 | 0.40 | 0.40 | 0.70 | 0.70 |
| 3 in. | | No 1 Ave 18 readings | 5.7 | 2.3 | 2.5 | 0.94 | 0.96 | 4.8 | 4.7 |
| dia.red | 1/3 | No 2 Ave 3 " | 5.3 | 1.9 | | | 0.74 | 4.5 | |
| plastic | | No 3 Ave 3 " | 8.1 | 3.4 | 2.9 | 1.4 | 1.00 | 7.0 | 7.2 |
| | | No 1 Ave 18 " | 25. | 11. | 11. | 4.4 | 4.9 | 20. | 21. |
| 3 in. dia. | 1/3 | No 2 Ave 3 " | 29. | 10. | | | 4.1 | 19. | |
| crystal plastic | | No 3 Ave 3 " | 28. | 12. | 11. | 5.6 | 5.0 | 25. | 22. |
| | | SAE Spec | 0.05 | 0.05 | 0.05 | 0.03 | 0.03 | 0.05 | 0.05 |
| 3 in. | | No 1 Ave 18 readings | 0.12 | 0.06 | 0.06 | 0.04 | 0.04 | 0.08 | 0,08 |
| dia.red | 2 | No 2 Ave 3 " | 0.30 | 0.13 | | | 0.08 | | 0.20 |
| plastic | | No 3 Ave 3 " | 0.20 | 0.08 | 0.08 | 0.04 | 0.05 | 0.16 | 0.14 |
| | | No 1 Ave 18 readings | 0.55 | 0.31 | 0.34 | 0.26 | 0.30 | 0.38 | 0.37 |
| 3 in. dia. | 2 | No 2 Ave 3 " | 1.1 | 0.60 | | | 0.57 | 0.77 | |
| crystal plastic | | No 3 Ave 3 " | 0.96 | 0.61 | 0.63 | 0.44 | 0.48 | 0.69 | 0.74 |

On two specific reflectors the following data were reported:

Reflector - 3 inch crystal plastic Stimsonite reflector
Entrance Angle - 0° (H-V)

| Laboratory | Date | Divergence Angle | | | |
|---|---|---|---|---|---|
| | | 1/3 Degree | | 2 Degree | |
| | | Refl. No. 10 | Refl. No. 11 | Refl. No. 10 | Refl. No. 11 |
| No 1 (visual) | 7/14/48 | 30. | 24. | 0.52 | 0.62 |
| No 2 (photoelectric) | 8/25/48 | 31. | 26. | 0.89 | 0.99 |
| No 1 (visual) | 11/15/48 | 27. | 28. | 0.52 | 0.42 |
| No 1 (visual) | 12/30/48 | 24. | 24. | 0.45 | 0.62 |
| No 3 (visual) | 5/4/49 | 30. | 30. | 0.96 | 0.78 |
| No 3 (photoelectric) | 11/8/49 | 32. | 26. | 0.85 | 0.88 |

Values are specific intensity in candles/ft.c.

# APPENDIX B. RECOMMENDED TESTING PROCEDURE

The following general ground rules are recommended as the basis for a standardized testing procedure for reflex reflectors.

1. Make all specific intensity and flux distribution measurements on uncolored (crystal) reflectors. The intensity measurements for colored devices should be determined from the spectral transmission data obtained from representative sample materials.

2. Use a reference comparison standard and reflector light source emitting white light at approximately 2360°K color temperature. This color temperature has been proposed for the reference source for all photometric measurements at photopic as well as scotopic levels. Measurements made using this reference standard will be valid and directly comparable with visual observations at all levels of illumination. The transmittance of filters should be computed using a reference source at 2360°K and the standard photopic visibility curve.

3. Use a photoelectric device to measure the light flux from the reflector. The receiver should approximate the conditions that exist during a visual appraisal ansofar as the size of receiver area is concerned. This implies a maximum receiver aperture of approximately 10 millimeters diameter. The photoelectric device should be capable of giving a reliable indication for a source emitting 0.01 c.p. at a distance of at least 100ft. The arrangement of the photocell receiver should be such that it can be used to evaluate all divergence angles up to the maximum encountered in automotive service. Truck or bus operators may have their eye position as much as 85 in. away from the center of the off-side headlamp. This would represent a divergence of 4° at 100 ft. or 2° at 200 ft. It is suggested that the range of divergence angles should be limited to 0 - 2°. The photocell circuit should be reasonably stable and readily calibrated. A reference standard tungsten light at 2360°K should be available for checking the instrument at frequent intervals. The overall circuit should be reasonably linear. The spectral response should preferably approximate the visibility curve. This is not absolutely necessary if the comparison technique is used, however, the spectral response should be principally in the visible region in order to avoid spurious effects of infrared radiation.

4. The test distance should be at least 100 ft. If a shorter test distance is necessary the entire arrangement should be reduced to scale and should be based upon: (1) a 3 in. maximum dimension reflector, (2) a 7 in. maximum dimension light source, (3) a 10 millimeter maximum diameter receiver aperture.

5. Where the divergence angle characteristics are asymetric, measurements should be taken in at least 3 orientation angle planes. The recommended positions are 0°, 45° and 90°.

6. The minimum values of specific intensity at various divergence angles should be set up in terms of uncolored (crystal) reflex reflectors. The minimum intensity of colored reflectors should be specified as a percentage of the uncolored specifications; example, red - 10%, amber - 40%.

The method of measurement outlined will permit the divergence angle characteristics to be measured at all test points and under all conditions of illumination and observation and reflector positions that are required for any type of service. The values of specific intensity at the different divergence angles, entrance angles and orientation angles for each type of service will have to be decided by other visibility tests that are not a part of this investigation. This will be the subject of further research and discussion.

# PHOTOMETRIC TESTS FOR REFLECTIVE MATERIALS

B. W. Pocock and C. C. Rhodes
Chemical Research Engineers
Michigan State Highway Department

## SYNOPSIS

Photometric tests developed and now in use by the Michigan State Highway Department for reflectivity measurements and color determinations on reflex reflectors and diffuse reflecting materials are described. Detailed accounts of equipment and procedures used in both tests are accompanied by examples of data obtained and methods of computation.

Some fundamental physical concepts and the significance of measurements are discussed briefly, and several useful and interesting applications of the data are pointed out.

Included also are photographs illustrating the apparatus now in use by the Department.

The rapidly increasing number of applications of reflex reflecting materials to the field of highway engineering has stimulated a growing interest among road builders in the development of a sound yet practical test whereby the optical performance of these materials may be estimated.

Akin to knowledge of their optical performance, which usually refers to the ability of these materials to function adequately as reflectors under service conditions, there has arisen a growing awareness of the importance which the color of the reflected light is beginning to assume.

Recognizing the need for quantitative tests of reflectivity and color for this class of materials, the Michigan State Highway Department in July, 1948, initiated the development of such tests. A few months later the work assumed added importance because of the necessity of preparing specifications to cover reflective materials and signs of all types for a statewide Federal Aid resigning program. Specifications incorporating these tests have been completed and in force for almost a year and have proved adequate thus far. Revisions will be made from time to time as the need for them arises.

It is with the hope of furthering the development and general adoption of uniform specifications governing the production, purchase and use of reflective materials that the present paper on the Michigan State Highway Depart-