The Penn State Road Friction Tester as Adapted to Routine Measurement of Pavement Skid Resistance

HARTWIG W. KUMMER and WOLFGANG E. MEYER, respectively, Research Assistant and Professor, Department of Mechanical Engineering, The Pennsylvania State University

The skid resistance problem is restated and the need for modern and efficient skid testing equipment for routine field tests is derived. The design and operation requirements for a routine tester are defined in terms of precision, ruggedness, compactness, traffic interference, and cost of operation. The design concept of the Penn State road friction tester is shown to fulfill these requirements. The trailer and towing vehicle, instrumentation and controls, the calibration equipment and method of calibration are described. Dimensions and specifications of the road friction tester, performance data and selected results of recent tests are given.

Also described is the prototype of a new portable tester developed especially for field use to supplement the large unit. The need for further work on the overall skid resistance problem is outlined and specific problems are shown to demand early solutions.

• SLIPPERY ROADS have been a problem for several decades (1) but only recently have they become more fully recognized as a serious menace to highway transportation. Modern techniques of investigating and evaluating traffic accidents identify skidding as a primary cause in 35 to 41 percent of all accidents on wet pavements (2). Although the seriousness of the skid problem is now generally accepted, the factors that control it are much less widely recognized.

In the last decade the average travel speed of vehicles has steadily climbed, reflecting both an increase of the legal speed limits and the tendency of drivers to exceed these limits by increasing margins.

The average travel speed of passenger cars on primary rural highways (3) has increased from 48.5 mph in 1950 to 53.8 mph in 1960 (Table 1), representing an increase of approximately 1 percent per year in terms of the 1950 speed (Fig. 1a). The speed increase in itself is perhaps not alarming, but becomes so when considered in terms of the required increase in the effectiveness of the frictional coupling between tire and road. For equal skid resistance, the coefficient of sliding must increase with the square of the speed. Thus, although the vehicle speed has gone up by approximately 11 percent, the frictional demand has increased by 23 percent over the last 10 years.

Traffic density is another factor that has a direct bearing on the skid resistance problem. For the years 1950 to 1960, Table 2 gives the total highway mileage in any one year, the annual total vehicle mileage, and the miles traveled annually per mile of highway (4-6). It is significant that the frequency of passes to which a given section of pavement is exposed has increased from 138,000 in 1950 to 205,000 in 1960.

Expressed in percent (Fig. 1b), the vehicle miles traveled have increased by 57.1 percent, whereas the total miles of highway have grown by only 5.66 percent, resulting in a 48.5 percent increase in the number of miles traveled on one mile of highway per year. This represents a like increase in the rate at which traffic polishes the pavement surface. Inasmuch as aggregate polish is one of the main causes of pavement

---

Paper sponsored by Committee on Road Surface Properties Related to Vehicle Performance.

TABLE 1

AVERAGE PASSENGER CAR SPEEDS ON PRIMARY RURAL HIGHWAYS

Year	Avg. Speed[a] (mph)	Cumulative Increase in Speed (%)	Required Increase in Coef. (%)
1950	48.5	0	0
1951	50	2.06	6.4
1952	51	5.16	10.5
1953	51.5	6.19	12.6
1954	51.5	6.19	12.6
1955	52	7.22	15.1
1956	52	7.22	15.1
1957	52.2	7.63	16.0
1958	52.8	8.87	18.5
1959	53.2	9.70	20.0
1960	53.8	10.92	23.0

[a] From reference (3).

slipperiness, any increase of traffic density is cause for concern even though the skid resistance of a pavement does not decrease linearly with the frequency of passes.

Figure 1c summarizes the effects of vehicle speed and aggregate polish on the sliding coefficient of friction. Whereas the magnitude of the sliding coefficient at any given speed is dependent on a large number of factors, the slope of the coefficient versus speed curve under wet conditions is dictated mainly by the geometric texture or "openness" of the pavement (7) and, to a lesser degree, by the tread design of a particular tire. Speed tests with various combinations of tires and pavements indicate that a coefficient drop of 0.5 to 3 percent per mph (based on the sliding coefficient at 35 mph) must be expected.

The coefficient is measurably lower in fall than in spring (8), and in any given season, lower than in the preceding year, the degree of decay being dependent mainly on the aggregate-binder combination, average vehicle speed and traffic density.

The increase in travel speed (and in the resulting frictional demand) and the frequency of the polishing action of passing vehicles, coupled with the decrease of the coefficient with speed and with polish, are the principal causes for the magnitude of the current skid resistance problem. That skidding accidents are courted by those who drive on excessively worn tires and the existence of several other factors, does not distract from the importance of these basic facts.

To control the skid resistance problem it must be possible to:

1. Accurately and economically measure the skid resistance or, what is very nearly the same, the coefficient of friction between a slipping or sliding tire or rubber specimen and the road surface;
2. Derive meaningful standards for the frictional demand that the majority of traffic situations make on specific road sections (the frictional demand varies with road layout, vehicle design, actual travel speeds and such difficult to define intangibles as driver judgment, skill and temper); and
3. Develop improved antiskid carpets that retain their surface properties for many years and find better ways of restoring the skid resistance of surfaces that have become polished or otherwise altered by traffic.

This report attempts to make a contribution to mastery of the measurement phase of the skid resistance problem by outlining the requirements which should be satisfied by skid resistance testers, and by describing two new tester designs: a trailer type and a portable device.

The highway engineer concerned with the skid resistance of a pavement is interested in the property of a surface as a physical characteristic, much as he would be interested in hardness or specific weight in other cases.

At present, however, it is not possible to describe the skid resistance property of a surface quantitatively. In a qualitative way, the skid resistance of a pavement may be characterized by the number of aggregate particles per unit area, their size and shape, by the molecular properties of aggregate and binder, etc., but a means of conveniently measuring these and other characteristics is lacking. For the time being one must depend on sliding a rubber specimen or tire over the surface to relay the desired information indirectly. Since the properties of the rubber as well as operational factors enter the picture in this method, the resulting coefficients are actually performance values

TABLE 2

TOTAL VEHICLE MILES AND MILES TRAVELED PER MILE OF ROAD[a]

Year	Total Miles of Roads (10^6)	Annual Total Miles Traveled (10^6)	Annual Miles Traveled per Mile of Road (10^3)	Cumulative Increase Since 1950 (%)		
				Miles of Roads	Miles Traveled	Miles Traveled per Mile of Road
1950	3.322	458,250	138	0	0	0
1951	3.327	491,090	148	0.135	7.17	7.25
1952	3.343	513,580	153	0.633	12.06	10.86
1953	3.366	544,430	162	1.32	18.80	17.40
1954	3.395	560,860	165	2.20	22.4	19.55
1955	3.418	603,430	176	2.99	31.7	27.50
1956	3.430	627,840	183	3.25	37.0	32.60
1957	3.453	642,580	186	3.94	40.2	34.80
1960	3.510	720,000	205	5.66	57.1	48.50

[a] From references (4, 5, 6).

and only implicitly contain the antiskid properties of the surface. Until it is possible to define and measure skid resistance of a pavement as a property, distinction between the meaning of the term skid resistance and coefficient is a matter of semantics. However, if both terms are used interchangeably, skid resistance loses its absolute meaning and becomes a relative term.

In this report, "skid resistance" will be used whenever reference is made to the friction potential of a tire-pavement combination in a general way. The term "coefficient" (in combination with an adjective, such as incipient, sliding, and steady state) will be reserved for situations which require more precise terminology.

SKID RESISTANCE MEASURING EQUIPMENT

Fundamental Requirements for Routine Testers

The equipment for routinely measuring skid resistance as part of highway maintenance programs is discussed herein. Through systematic gathering, mapping and evaluating of skid resistance data, slippery pavements can be identified and corrective measures taken before slipperiness becomes a direct accident cause. The specifications of such a tester will differ from those of a tester intended for research work or specific experimental programs.

There are 10 requirements that are regarded as fundamental to the design of a routine tester. They are not necessarily complete nor are the requirements listed in order of their importance, but included are the following:

1. Meaningful measurements;
2. Precision of test data;
3. Minimum data processing;
4. Balanced coverage and test cycle frequency;
5. Adequate range of operation;
6. High degree of mobility and maneuverability;
7. Minimum traffic interference;
8. Ruggedness;
9. Economy of operation; and
10. Comfort and safety of crew.

Meaningful Measurements.—The requirement to obtain meaningful data from a tester seems to be trivial and self-evident at first sight, but closer study indicates that this is not so. Since coefficients are performance values which can be altered at will by changing the test tire or an operational variable, a tester may fulfill all other requirements

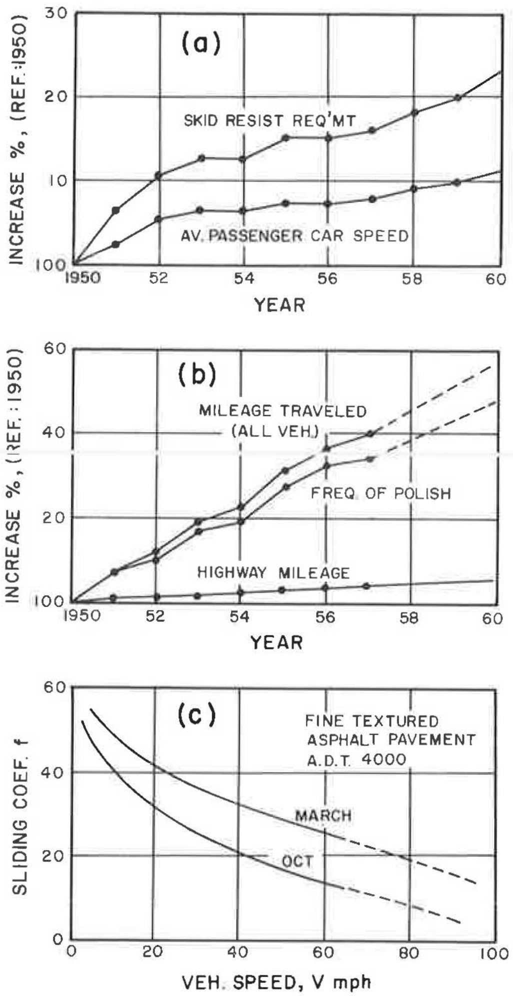

Figure 1. The skid resistance problem: (a) average passenger car speeds on primary rural highways; (b) total vehicle miles traveled per mile of highway; and (c) skid resistance as function of speed and aggregate polish.

but will not furnish data that have a direct bearing on the slipping and sliding coefficients experienced by traffic, and in extreme cases, the data may defy correlation. This requirement thus influences the selection of the mode of tire operation, the test speed (which also has a bearing on minimum traffic interference) and the method and rate of applying water to the pavement. Other factors are the normal load acting on the tire elements, rubber composition, etc. To testers that employ a rubber specimen instead of a tire, the same basic factors apply.

Precision of Test Data.—To enable the highway engineer to compare test results from pavement to pavement or performance of a given pavement from year to year, the test equipment must record with little error what the tire or rubber heel "feels" when it is dragged over the pavement surface. What degree of precision should be built into a tester? Precision is influenced by tester design, the type of instrumentation employed, and the degree to which such operational factors as wheel load, inflation pressure, test speed, temperature and water film thickness can be controlled or monitored.

Errors that change in magnitude as well as direction must be prevented especially. Constant errors can be predicted or calibrated as to magnitude and direction. A tester subject to an error of the latter type produces data that can be used for valid year-to-year comparisons. Correlation of data with that of other testers with which side-by-side comparisons cannot be made would be possible if magnitude and direction of the errors of both machines were known under all conditions, but this is virtually impossible to accomplish. Therefore, even constant errors must be kept small. An overall tester accuracy of ± 2 percent can be obtained without undue effort. Such accuracy allows no compromises in design and function, and the transmission of the force or torque signal to the recorder must be drift free with respect to time and temperature and low in hysteresis. In addition, good calibrating equipment and a suitable calibrating procedure must be used to check out the entire system from tire or rubber slider to recorder or indicator. It is self-evident that the precision of the calibrating equipment must be higher than that of the tester. Calibration to an accuracy of the order of ± 1 percent is desirable and obtainable.

Minimum Data Processing.—In routine operations, a great bulk of data must be processed and this should be possible with minimum effort and little chance of error. These requirements dictate that the instruments should not record or display numbers which must be converted to coefficients, but that coefficients are displayed or recorded directly through suitable selection of dials, recorded charts, and instrument gains. It is also desirable to have other pertinent information such as test speed, test location, pavement type and condition, noted or coded on the charts. Speed should be recorded as a continuous trace rather than from the distance between event marks.

Currently, analog recording equipment appears to be the most practical. Advances in digital instrumentation, however, will make digital printout of the coefficient feasible within the next few years. With data storage and comparison as part of the data processing system, the digital method has definite merit, particularly where year-to-year comparisons for a highway system are to be made.

Balanced Coverage and Test Cycle Frequency.—To detect slippery sections with any degree of certainty, the tester should measure a large percentage of the total distance traveled, and perform many test cycles within the total distance traveled.

To express the coverage of a tester numerically, the coverage factor is introduced.

$$C_c = D_m/1,000 \tag{1}$$

in which D_m is the distance in feet over which the tester measures skid resistance while traveling 1,000 ft.

For certain manual testers C_c may equal 1, but generally D_m is less than 1,000 ft. For instance, in the case of trailer-type testers, tire wear and/or temperature damage to the tread set an upper limit to D_m. There is also a lower limit because a certain distance must be traversed with the test wheel locked if the steady state coefficient is to be obtained. It takes a certain amount of time until temperature equilibrium in the contact area is attained. Experiments have shown that for all practical purposes, at 35 mph the coefficient has stabilized after sliding 50 ft.

The coverage factor does not discriminate, however, between a tester that locks the tire once for 200 ft in 1,000 ft of travel and another that locks twice for 100 ft in the same travel distance. To distinguish between these testers the test frequency was introduced.

$$C_f = 1,000/D_c \tag{2}$$

in which D_c is the distance required for one complete test cycle.

Combining Eqs. 1 and 2,

$$C_f = \frac{D_m}{C_c D_c} \tag{3}$$

Although it is desirable to have C_f as well as C_c large, Eq. 3 shows that a compromise must be made.

Adequate Range of Operation.—The tester should be capable of executing a large number of cycles without the necessity of refilling the water tank. Because a meaningful coefficient requires a minimum water flow rate and sliding distance, the tester range between water stops can be increased only by careful timing and coordination of the braking and water cycles and by increased capacity of the water tank. The useful maximum capacity depends on the average distance between convenient water points and whether tests are conducted along a continuous route or if individual sites are to be reached from an operational base.

High Degree of Mobility and Maneuverability.—Mobility and maneuverability requirements can be satisfied by a good weight-to-horsepower ratio (80 lb/hp or less), by suitably selected transmission and rear axle ratios, by short overall length of the towing vehicle-trailer combination, good all around vision and provisions for facilitating transportation of the tester between test sites.

Minimum Traffic Interference.—Even with present-day traffic densities, routine measurements should not require keeping traffic off the test site. It is not practical to measure at peak traffic speeds, because this also necessitates traffic control during a test. However, it is necessary that all tests on a particular type of highway be made at one speed in order to make comparisons possible. In a survey of the Pennsylvania highway system in 1962, it was found that the most satisfactory test speeds are 35 mph on primary and secondary roads and 60 mph on limited-access highways.

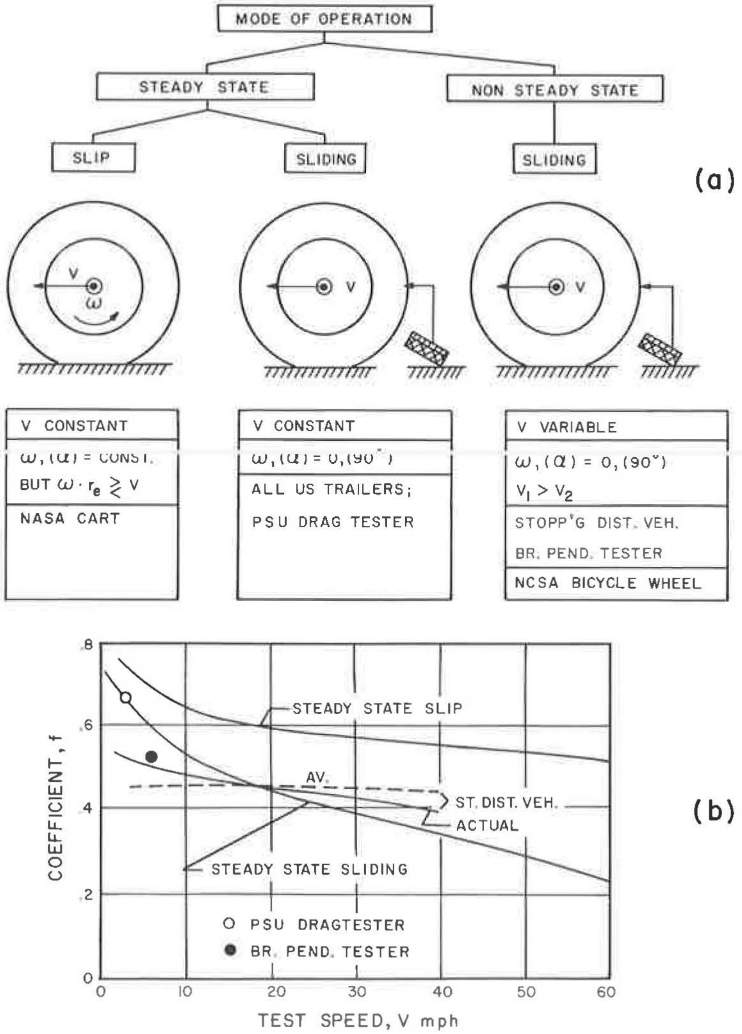

Figure 2. Classification of testers: (a) modes of operation; (b) corresponding sliding coefficients.

Ruggedness.—Routine testers accumulate mileage fast and have to travel and measure rough or damaged roads. Moreover, preventive maintenance, although highly desirable, cannot be counted on heavily in the case of a tester operated for prolonged periods away from its home base by nonspecialized personnel. The tester may have to travel continuously during the fall (which appears to be the best season for meaningful routine skid resistance measurements). Breakdowns of equipment and instrumentation can prevent completion of the test program before the onset of winter. Sound design, easily exchangeable instrument components (modular design), shock mountings, and use of standard components wherever feasible will do much to reduce breakdowns and the need for specialized maintenance.

Economy of Operation.—It is essential that operation of a routine tester be low in cost. The criterion is not so much the first cost of the equipment as the cost per test. The latter can be held down if the number of tests that can be made in a day is high, if the man-hours for operation and data analysis are low, if little maintenance and repair are needed, and if life expectancy of the tester is high.

Comfort and Safety of Crew.—Comfort and safety of the crew are considerations which cannot be ignored. In routine testing the crew may spend 6 to 8 hr per day in the vehicle. They may be called upon to perform certain functions again and again. Complete or partial automation of the various operations is therefore desirable and practical. Adequate space in the cab of the vehicle and space for personal luggage and for essential spare parts must be provided.

To insure the safety of the crew and other road users, good visibility is essential. Safety belts and warning lights, as well as effective safety colors and patterns on the tester, should be provided.

Classification of Testers

A classification of test equipment according to its mode of operation was suggested elsewhere (9). Figure 2 shows the three modes of operation and the resulting coefficients.

The steady-state slip mode of operation has not been used for skid resistance measurements in this country with the sole exception of the NASA friction cart. Under this mode, the tire is operated under constant slip, either in braking, driving or cornering, with the vehicle or tester speed kept constant. This type measures the highest (incipient) coefficient on any given pavement.

Most American and European trailers operate at the steady-state sliding mode by locking the test wheel and dragging it over the surface at constant speed. Since a locked wheel can be represented by a single tread element, a rubber slider may be used instead. Among the portable testers, the Penn State drag tester (described later) and the circular tester developed at the University of Wisconsin operate according to this mode. The resulting (sliding) coefficient is lower and decays more rapidly than the steady-state slip coefficient (10).

Stopping distance vehicles and the British pendulum tester represent applications of the nonsteady-state sliding mode. In these testers, a fixed amount of kinetic or potential energy available to the tester is dissipated completely or in part by the tire or rubber slider thereby causing a decrease of the sliding speed. Due to this speed decrease, the temperature pattern in the contact area differs from that prevailing under steady-state conditions resulting in differing coefficients at any given speed. The nonsteady-state coefficient is higher at higher speeds and lower at lower speeds (Fig. 2b). Air resistance effects may increase this trend. As a rule, the stopping distance vehicle is not capable of measuring the coefficient directly; it produces an average value (dashed line in Fig. 2b, representing the integration of the solid curve). Due to transients in slider load and temperature, the British pendulum tester plots below the steady-state sliding curve, whereas the Penn State drag tester, being a steady-state sliding device, produces results which fall on the corresponding curve obtained by locked-wheel trailer tests.

Figure 2b shows that there is no such thing as "the" coefficient for any given surface. However, the various coefficients produced by the three modes are relatable.

Presently Used Trailer Types

The mode selected for a tester was shown to have a profound effect on the magnitude of the skid resistance measured. Likewise, the designs of testers utilizing the same operating mode can vary widely and the differences may influence the results. The best criterion of a successful design is the simplicity of the equation linking the friction force measured by a force transducer or torque cell to the force in the contact area felt by the tire of rubber slider. The fewer terms the equation contains the better.

The governing equations for trailers that measure hitch forces or the forces in a link restraining the brake backing plate and for parallelogram trailers were developed earlier (9). Trailers measuring hitch forces have proved unsatisfactory.

Figure 3 shows schematically three presently used trailer types. Trailers in Figure 3a measure the bending moment M at the location shown; those in Figure 3b measure a force F_1 in a restraining link that serves as anchor for the brake backing plate which is otherwise free to rotate. Parallelogram trailers (Fig. 3c) measure a force F_2 in a link connecting the backing plate (that is also free to rotate) to the hitch of the towing vehicle.

The following three equations relate M, F_1, and F_2, respectively, to F and illustrate the different effect that the three designs have on the complexity of the individual equations. The notation employs the symbols of Figure 3.

When the wheel is locked, the friction force F distorts the contact area of the tire and thereby moves the center of the footprint rearward with respect to the wheel axis. This effect is neglected in the equations, but is discussed subsequently.

For trailers in Figure 3a:

$$f = \frac{M/L - i - [(h - r)(d/g) - (i - e)]\, a/(a - e)}{r + [(h - r)(d/g) - (i - e)]\, [a/(a - e)]\, b/a} \tag{4}$$

in which

f = F/L sliding coefficient;
L = actual wheel load (which in the present case is different from the static wheel load L_o); and
d/g = horizontal deceleration expressed as fraction of the gravitational acceleration.

Eq. 4 indicates that f is by no means directly proportional to the measured moment M and that it is affected by the location of the center of gravity (cg), by deceleration or acceleration effects and, among others, by the geometric ratio b/a. Since fluctuations in speed cannot be avoided ($d/g \neq 0$) Eq. 4 can be simplified only by letting h approach r.

For trailers in Figure 3b:

$$f = \frac{(c/r)(F_1/L_o)}{1 - [(h - b)/(a - e)]\,(d/g) - (b/a)\, f_o} \tag{5}$$

in which

f_o = F/L_o

As in the preceding case, the coefficient is affected by the location of the center of gravity, by d/g and by the geometric ratio b/a. Inasmuch as $d/g \neq 0$, Eq. 5 can be simplified only when h is made to approach b.

A linear relationship between F_1 and f would be obtained if $b/a = 0$. This is impossible to achieve, but can be approached by making b small and a large. Ideally the center of gravity is at the same elevation as the hitch (h - b), but again this cannot be attained, only approached. In the case of trailers in Figure 3a where the bending moment in the towbar is measured, the center of gravity does not have to be below the wheel center.

For trailers in Figure 3c:

$$f = (c/r)(F_2/L_o) \tag{6}$$

The coefficient is directly proportional to F_2 (the force experienced by the transducer) and is not affected by speed fluctuations or dimension a of the trailer.

Suitability of Testers for Routine Use

Table 3 compares the various types of testers as to their suitability for routine surveys on the basis of criteria developed earlier.

To determine the cost per site, estimates had to be made with respect to life expectancy, maintenance and direct cost. It was assumed that tests were conducted only during 6 months of the year, and semiskilled personnel receiving $4,200 per year were employed.

A site is defined as a pavement section of 12 × 150 ft. To survey such a section, stopping distance vehicles and trailers need execute only one test, whereas 5 or more tests at different locations must be performed with portable testers to appraise the average skid resistance of the site correctly.

The assumed life expectancies may appear conservative, but day-to-day use wears

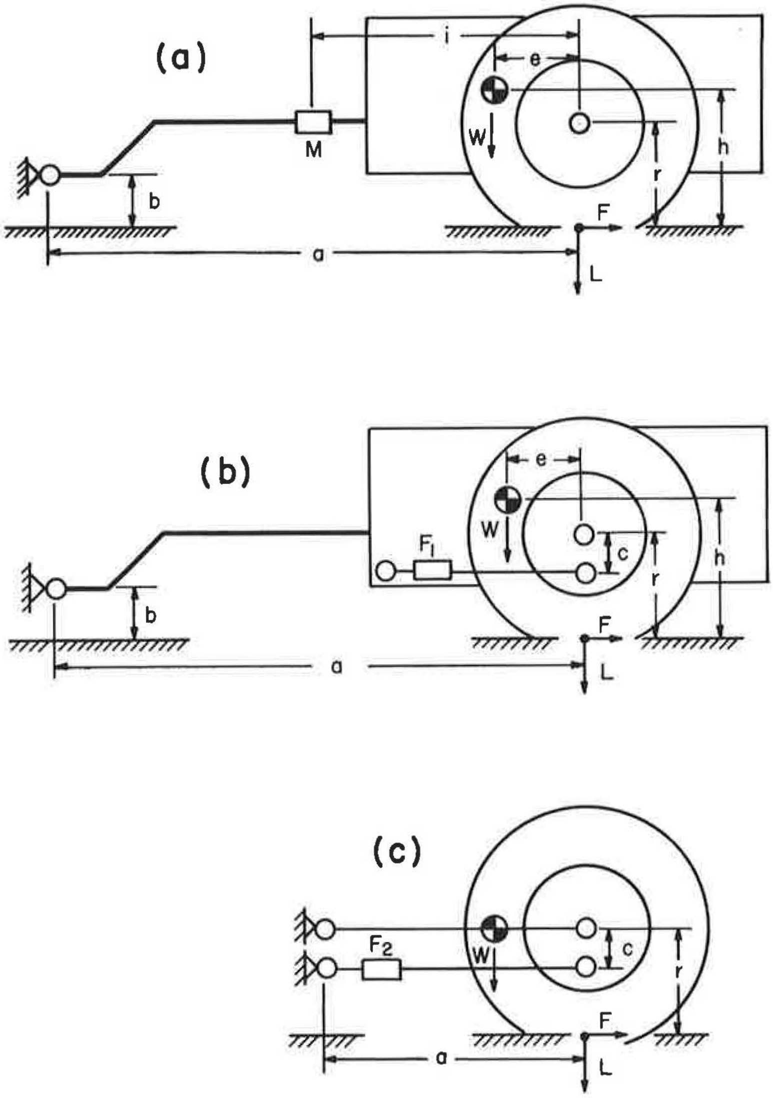

Figure 3. Trailer types: (a) trailers measuring bending moment; (b) trailers restraining brake backing plate against trailer structure; and (c) parallelogram-type trailer.

out any tester, and equipment should be phased out before major troubles develop.

The stopping distance method requires the largest crew because a water truck is needed to wet the test sections. The wages of the water truck crew and the cost of operation, maintenance, and depreciation were included in calculating the cost of the stopping distance method.

The figures for the costs per site are by necessity approximate ones, but they indicate orders of magnitude and provide a valid comparison.

PENN STATE ROAD FRICTION TESTER

Design Concept

The Penn State road friction tester was developed in two stages. The trailer was designed and built in 1958 and was used behind various towing vehicles. In 1961-62 it was integrated into a complete unit. Although the trailer was originally intended for research not only on pavement skid resistance, but also on tires and brakes, the design proved to be well suited to routine skid tests.

Trailer type testers are superior to the other types on all counts with the possible exceptions of data display and hazard to test crew. Although the initial cost of trailer testers are highest, the cost per test site is roughly 90 percent lower than for the two other tester types. Thus little doubt should exist that for any long-term skid resistance control program the trailer type is the only choice.

Having decided on a trailer type tester, the various trailer principles were analyzed for their compatibility with requirements 1, 2, 6 and 8 (Table 3). Comparison of the trailer types (Fig. 3) on the basis of Eqs. 4 through 6 clearly indicates the superiority of the parallelogram design.

Perhaps the most important feature of this design is that its wheel load is independent of the friction force F. Therefore dimension a can be made small (provided this does not interfere with the suspension dynamics) permitting the trailer to be quite "stubby." A compact trailer is regarded as a prerequisite for achieving good mobility and maneuverability.

Next a decision had to be made on whether to incorporate the parallelogram concept into a single- or two-wheel trailer. The second wheel of a two-wheel trailer can serve three purposes: (a) stabilizing the trailer with respect to motions around the roll axis, (b) preventing trailer yaw when only one wheel is locked, and (c) permitting alternate testing in the left- and right-wheel tracks.

Roll stabilization of the trailer by a second wheel is required only when the wheel load is applied by weights carried on the trailer platform resulting in a high center of gravity. When the wheel load can be applied by other means, the stabilizing role of the second wheel is not required.

To insure favorable suspension dynamics and a low weight-to-horsepower ratio, a pneumatic load cylinder indirectly suspended on the towing vehicle was selected to use part of the weight of the truck for loading the trailer wheel; thus, no extra mass must be added for this purpose. Use of a pneumatic loading element has other advantages. It permits changing the wheel load during operation by changing the air-pressure. Moreover, it permits automatic and close control of a fixed-wheel load by a precision regulator. Because of the low trailer weight, it is possible to use a Coulomb damper (rather than second wheel) mounted between trailer and towing vehicle for controlling the small yaw moments that develop on occasion. The pneumatic loading system also allows provision to be made for raising the trailer wheel off the road for transportation between test sites.

The capability of measuring skid resistance in either the left- or right-wheel track is of advantage in specialized experiments, but it is of little value for highway surveys. Tests showed the sliding coefficient to be the same in both wheel tracks of "no passing" lanes, whereas the left-wheel track exhibited lower readings where passing is permitted or where two lanes serve traffic going in the same direction. The difference between the skid resistance values of the two wheel tracks is due to different degrees of polish. Since highway engineers are generally interested in the lowest skid resistance of a section of pavement, it was decided to mount the single-wheel trailer so that it would normally run in the left-wheel track.

Pennsylvania is mountainous terrain and requires a weight-to-horsepower ratio of less than 80 lb/hp if the tester is to maintain the assigned test speed during skid measurements on upgrades and travel at average traffic speed to and from test locations.

A tester was desired whose suspension dynamics (of the truck-trailer combination) would permit testing on pavements with a fair degree of roughness and would remain unchanged over several years. These requirements were satisfied by selecting a Chevrolet C25, ¾-ton truck chassis (GVW rating of 7,500 lb) as the towing vehicle. The front and rear suspensions are virtually free of Coulomb damping and consequently do not lead to alteration of the natural frequency of the unit during its service life. Space in the cab and under the hood is ample and permits installation of all required accessories, controls, and instrumentation.

The truck is equipped with a 160-hp V-8 engine, a two-speed automatic transmission

TABLE 3
SUITABILITY OF TESTER TYPES FOR ROUTINE FIELD TESTS

Requirement	Portable Testers	Stopping Distance Vehicles	Trailers
Meaningful measurement	Poor to good	Good	Good to excellent
Precision of test data	Good	Poor to good	Good to excellent
Data display	Direct readout	Indirect	Indirect and direct readout
Coverage factor and test frequency	Poor	Poor	Good to excellent
Operating range	—	Poor to good	Good to excellent
Mobility and maneuverability	—	Excellent	Poor to excellent
Traffic interference	Very high	High	Low
Ruggedness	Good	Poor	Good to excellent
Hazard to test crew	High	High	Low
Required test crew	1-2	3-4	1-2
Operating cost:			
Initial cost, $	500	3,500	10,000-25,000
Sites tested/day	8-12	15-25	100-400
Life expectancy (yr)	6	2	5
Maintenance and direct cost/ year, $	50	1,250	1,250
Total wages/year, $	4,200	8,400	4,200
Cost/site tested, $	3.34	4.70	0.32

and a limited-slip differential. The latter increases the margin of safety with respect to breakaway of the driving axle when measuring very slippery road surfaces.

The rear end of the truck was shortened by cutting 18 in. off the frame extension and modified to accommodate a 250-gal water tank, a ½-hp centrifugal pump, a 9-gal air storage tank (serving as capacitor for the trailer air spring), two batteries (one for the normal vehicle requirements, the other for powering the instruments), and the trailer hitch. Although the trailer normally runs in the left-wheel track, the hitch can be moved laterally to allow the wheel to run behind the center of the truck or in the right-wheel track.

In the cab is a large instrument panel which contains, suitably grouped gages, control equipment and instrumentation, a DC-AC convertor supplying the power for the recorder and an automatic cycle timer. An automatic speed control, auxiliary electric generator, air compressor, air storage tank and a distance switch are among the accessories mounted in the engine compartment.

Off-the-shelf components were used wherever possible to reduce maintenance and replacement problems and to hold down the construction cost of the tester.

Description of Trailer

The trailer consists of the main arm (1) and rod (2) that restrains the brake backing plate which is otherwise free to rotate (Fig. 4a). These two elements form the long sides of the parallelogram. The design incorporates a Chevrolet passenger car brake (3) and wheel assembly (4) which accepts the 7.50 × 14 ASTM Standard pavement test tire.

Supported by cantilever (5), is a Buick passenger car air suspension unit (6) subsequently referred to as the load cylinder that applies a controlled force to main arm and through it to wheel. The diaphragm area of the load cylinder remains constant within the normal range of travel, thus making the wheel load directly proportional to the air pressure within the load cylinder.

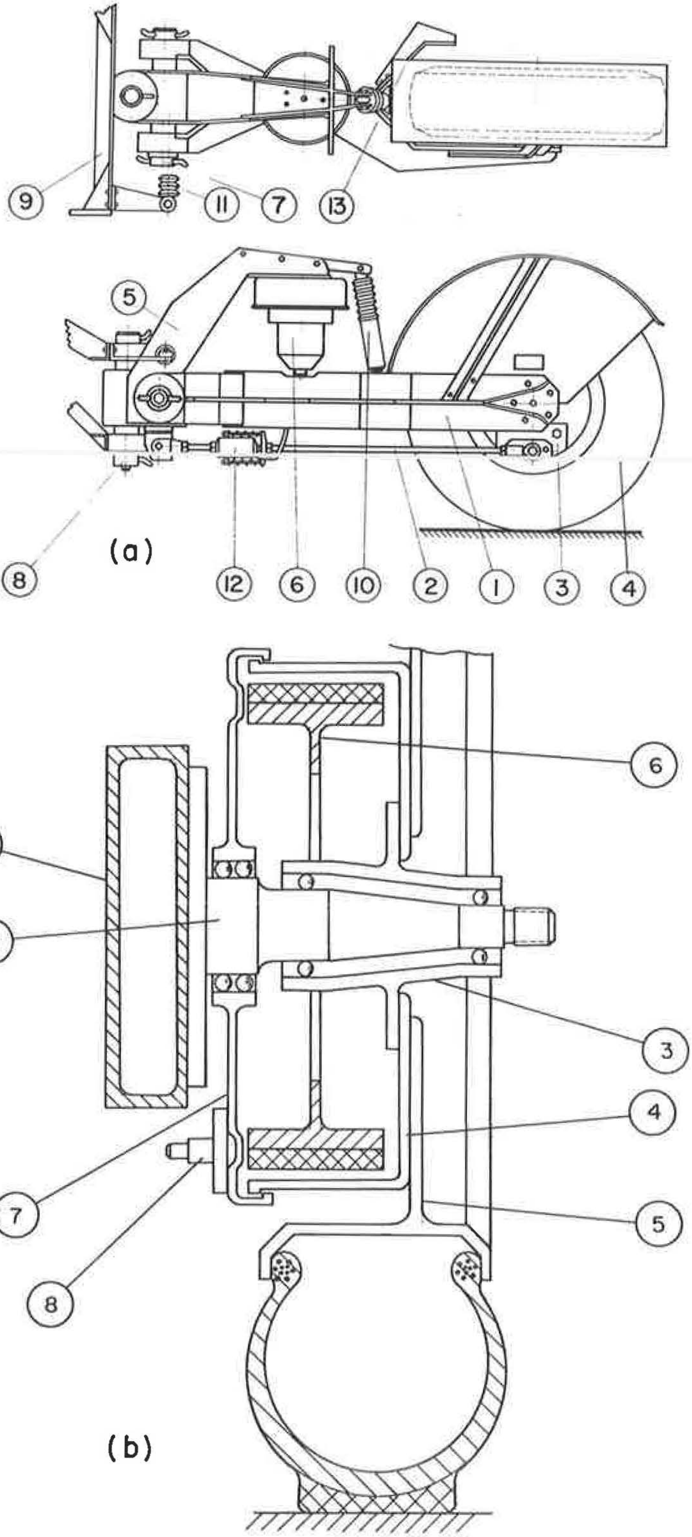

Figure 4. Penn State single-wheel parallelogram-type trailer: (a) design drawing; (b) wheel assembly.

Main arm is connected to the lower end of cantilever by pitch pivot (7) and the entire trailer is connected via yaw pivot (8) to hitch (9) of the towing vehicle. Both pivots are generously dimensioned pins supported on two sealed, self-aligning, double-row ball bearings. The main arm and cantilever are of welded construction with cross-sections of generous stiffness in bending and torsion. Trailer motion about the pitch axis is damped by a hydraulic shock absorber (10), that about the yaw axis is by a Coulomb damper (11) which also stabilizes the trailer when the test wheel is locked. Force transducer (12) is inserted in the foreward section of restraining rod. Carrier (13) is used to mount additional equipment or instrumentation and is detachable.

Figure 4b shows a cross-section of the trailer wheel assembly. Bolted to the end of trailer main arm (1) is spindle (2) supporting hub (3) via two ball bearings. Connected to the hub are brake drum (4) and wheel (5). Brake shoes (6) are attached to the reinforced backing plate (7). Supported by a heavy duty, double-row ball bearing, the backing plate is rotatable around the spindle, but is restrained by rod (Item 2 in Fig. 4a), attached to anchor (8) via a self-aligning bushing.

Support System

The trailer functions are supported by the electrical (Fig. 5a), the pneumatic (Fig. 5b) and the water system (Fig. 5c). The block diagram of the electrical system shows the two separate electrical circuits, one for the basic services and the other for program control and instrumentation. Each circuit has its own generator, fuse box and battery. The separation of the instrumentation circuit from the service circuit has the advantage that the voltage of the former can be controlled more closely and is not affected by load fluctuations caused by switching heavy loads, such as the water pump and the solenoid valves.

The service circuit is powered by a 60-w heavy duty Delco generator with diode rectification and transistorized regulator. It supplies power to the towing vehicle, the road speed governor, four solenoid operated air valves, the water pump, and the safety lighting equipment. In the instrumentation circuit a 35-w Delco DC generator supplies power to the instruments, a 20-w Carter DC-AC convertor for the potentiometer recorder, and a Cramer 6-cam cycle timer. All electrical connections to the trailer pass through a single connector.

The cycle timer controls the test cycle by actuating the brake, the water pump, the water valve and the coefficient recorder in the correct sequence, at appropriate intervals, and for the necessary duration. The timer may be triggered automatically either at fixed time intervals (tests can be repeated every 12, 15 or 20 sec) or at fixed distance intervals. In the latter case, a distance switch driven by the right-front wheel of the towing vehicle triggers the timer at intervals of either 600 or 1,200 ft.

The pneumatic system (Fig. 5b) maintains and controls wheel load and inflation pressure of the test wheel, operates the brake and water valves, three-auxiliary cylinders and accessories. A two-cylinder, single-stage Kelsey-Hayes air compressor (C) driven by the truck engine delivers 0.85 cfm of air at 135 psig.

Air passes from the compressor through one-way flow control valve (CV) and automatic drain filter (F) into storage tank (T_1). Regulator (R_1) reduces the pressure to a suitable working level (approximately 100 psig) that is monitored by gage (G_1). This regulated pressure may be applied to auxiliary cylinders ($AC_{1,2,3}$) via solenoid operated valve (SV_2). Cylinder (AC_3) raises the main arm of the trailer into the transport position after the air has been discharged from the load cylinder (LC). Cylinders ($AC_{1,2}$) are in parallel pneumatically with (AC_3) and mechanically with the rear coil springs of the towing vehicle. With air admitted, they elevate the rear end of the truck and thereby the trailer hitch. This gives the trailer wheel an 8-in. clearance above ground, adequate for fast travel on rough roads and in maneuvering. Solenoid valve (SV_2) is mounted on the trailer. It could be moved into the cab of the towing vehicle without difficulty and the trailer wheel could be raised from test to transport position without stopping the vehicle.

The regulated pressure is also applied, via solenoid actuated valve (SV_4), to air cylinder (AC_4) which opens and closes the water valve. Solenoid valve (SV_3) controls the air actuated, hydraulic brake master cylinder (BC); it also admits air via regulator

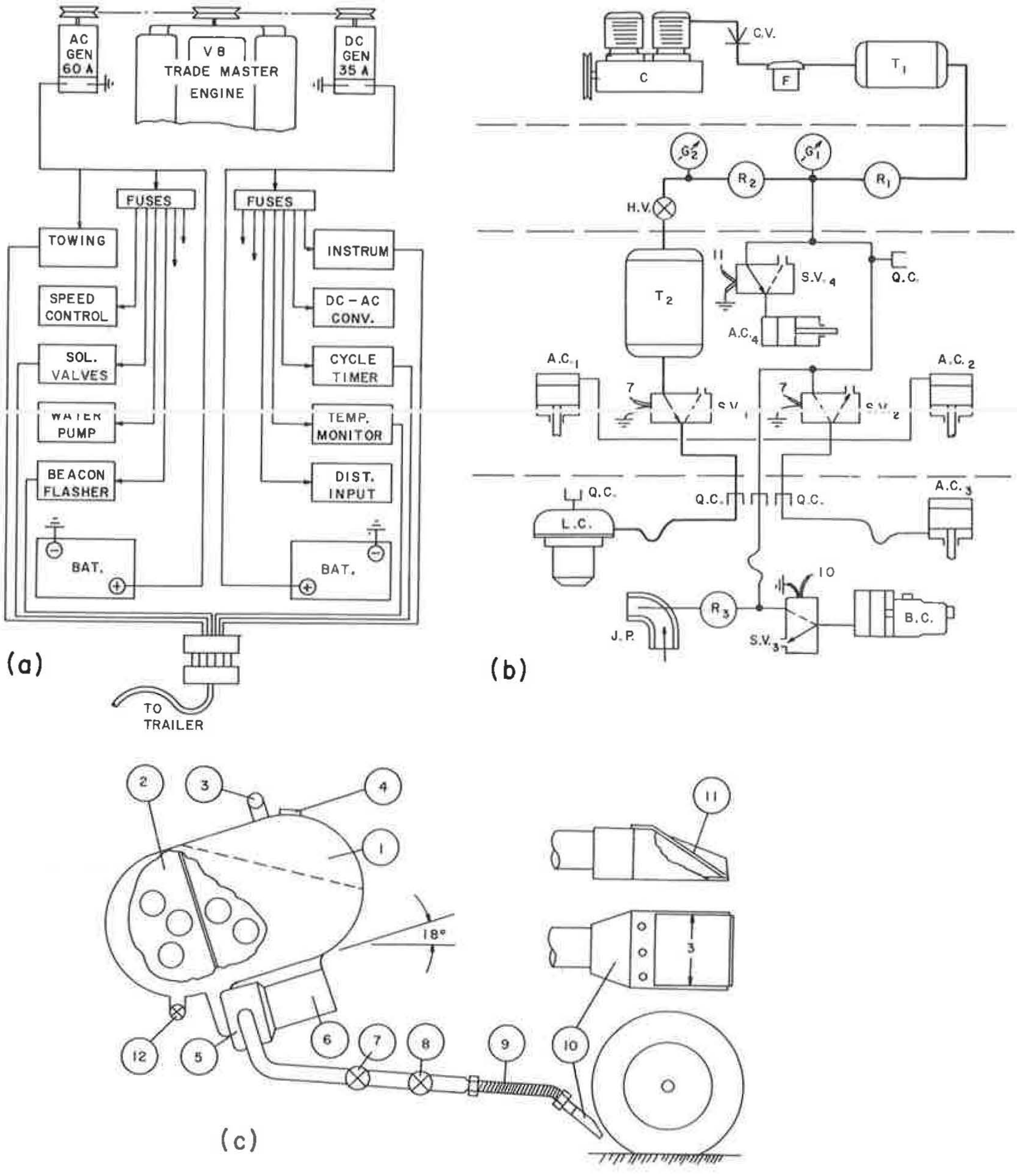

Figure 5. Support system: (a) electrical system; (b) pneumatic system; and (c) water system.

(R_3) to jet pump (JP). This pump sits on the fender of the trailer wheel and pulls air warmed by the trailer tire over a thermistor, thereby obtaining a temperature signal that is representative of the test temperature.

Precision regulator (R_2) reduces the pressure due to (R_1) to a value given by the desired wheel load. A one psi pressure change corresponds to a wheel load change of approximately 10 lb. Air flows from pressure regulator (R_2) through hand valve (HV), expansion tank (T_2), and solenoid valve (SV_1) to load cylinder (LC) of the trailer. The load cylinder solenoid valve (SV_1) is wired to solenoid (SV_2) so that the load cylinder is emptied when air is admitted to auxiliary cylinders ($AC_{1,2,3}$) and vice versa. The precision regulator holds any set load cylinder pressure within ± 0.05 psig, thereby keeping the test wheel load within ± 0.05 lb or 0.05 percent of the design wheel load. Since gage (G_2) for monitoring the load cylinder pressure has a resolution of only 0.25 psi, the difference between desired and obtained wheel load may be as much as ± 2.5 or 0.25 percent.

Whereas the precision regulator (R_2) maintains the static pressure in the load cylinder within the indicated limits, the regulator cannot respond quickly enough to temporary pressure increases that result from changes in the length of the load cylinder caused by the pitching motion of trailer and/or towing vehicle. To deal with this problem, storage tank (T_2) was added. To augment the volume of the compression chamber of the load cylinder and act as a capacitor, thereby keeping the pressure, and consequently the wheel load changes, small.

The water system (Fig. 5c) is laid out to hold sufficient water for approximately 150 tests and to produce a controlled flow rate that is not affected by the head in the water tank (1). The latter is a 12-gage, 275-gal fuel oil tank modified to hold 250 gal of water. Cross- and length-wise baffles (2) were installed to prevent sloshing of the water when the tank is only partly full. A 15-ft rubberized fire hose with a 1½-in. diameter is connected to filler elbow (3) with a Fyrefiter universal adapter on the other end that fits most fire hydrants (a hydrant wrench is carried in the truck). Opening (4) is closed by a rubber valve that serves as an air vent and prevents over-pressure on the tank when the hydrant is not closed in time. The tank can be filled from a hydrant in 3 min, whereas 15 to 25 min are needed if a garden hose must be used.

The water passes through a Brown & Sharpe centrifugal pump with a capacity of 1 gal/sec against a 15-ft head. The pump is driven by a ½-hp, 12-v General Electric DC shunt motor controlled by the cycle timer through a power relay. The manually adjusted ball valve (7) controls the flow rate, while ball valve (8), operated pneumatically and synchronized by the cycle timer with the brake cycle, starts and stops the water flow. With valve open, water passes through flexible hose (9) and discharges through variable orifice nozzle (10). The nozzle is 3-in. wide and deposits a splash-free stream of water directly ahead of the test wheel at all flow rates. The smooth flow is brought about by flexible element (11) that adjusts the nozzle opening automatically to the flow rate and seals off the line as soon as valve closes, thereby conserving water.

Recording System

A detailed study of available force transducers and recorders showed the Dillon load cell and remote indicator, in combination with the CEC-DeVar 301 recorder (Fig. 6a), best met the requirements for precision, minimum data processing and ruggedness.

1. The Dillon remote indicator operates on dry cell batteries and is therefore independent of the tester's electrical system. Because the maximum drain is only 18 ma, the dry cells permit continuous operation for 3 to 6 months.
2. The indicator is available with dual-range features which makes good resolution available at very low coefficients. (Although for routine work this is not too important, it can be of great value in research work.)
3. The load cell is of the differential transformer type, and as such, compact, rugged and electrically stable.
4. The load cell is available with a second output winding that can be matched to the input requirements of a recorder, thus permitting alternate or simultaneous use of an indicator and recorder.
5. The CEC-DeVar 301 recorder is transistorized, of modular design that permits quick exchange of components, has sufficient sensitivity to accept signals on the order of millivolts, and is electrically stable.
6. The recorder is available with three channels, thus permitting simultaneous recording of the coefficient, speed, and a third pertinent variable such as temperature.
7. The 4-in. chart of the recorder provides good resolution and has a graduation that permits coefficient and speed to be read directly.

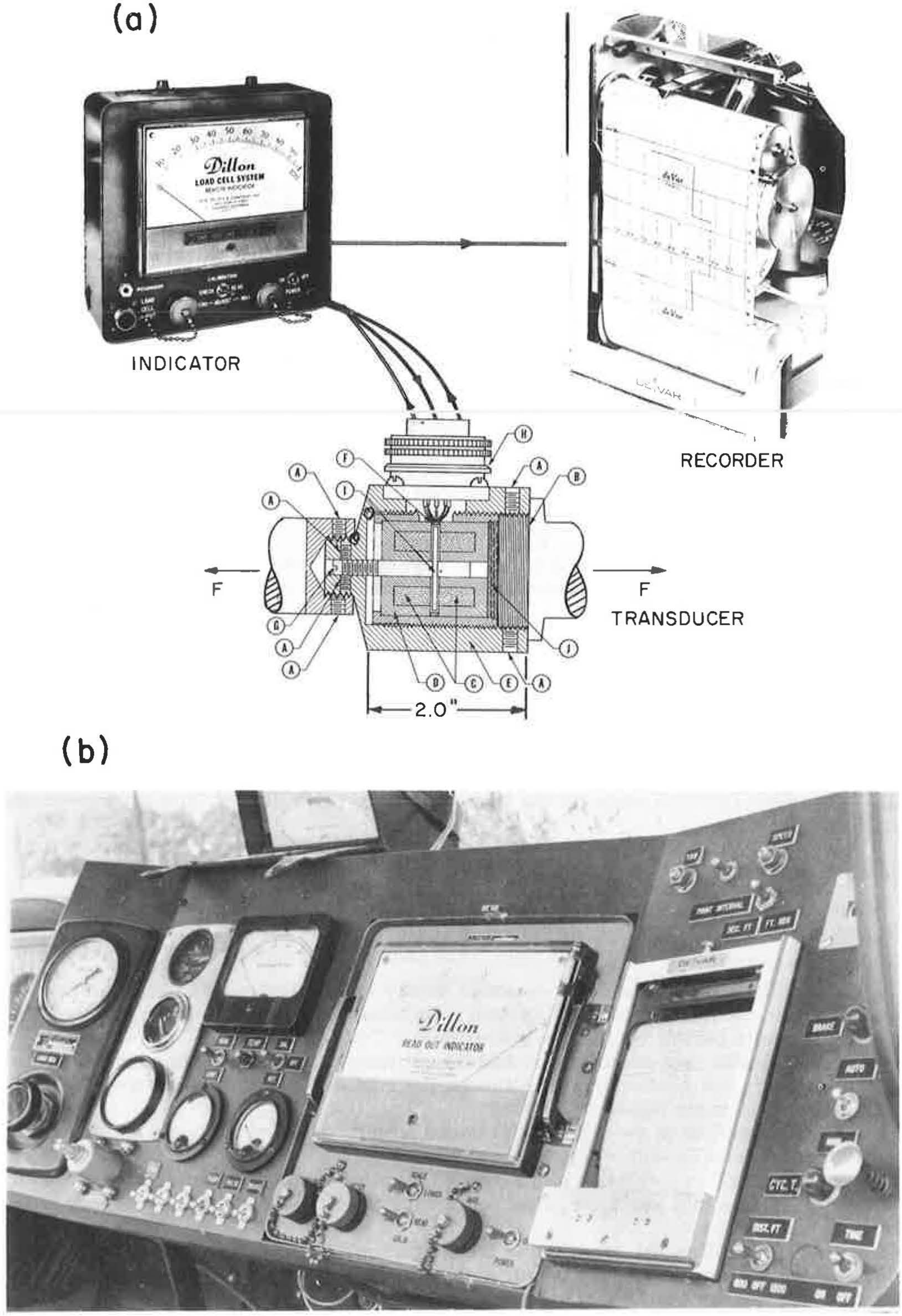

Figure 6. Instrumentation and control: (a) recording system; (b) instrument panel.

Figure 7. Penn State road friction tester: (a) trailer in test position; and (b) trailer in transport position.

The Dillon load cell (Fig. 6a) consists of an alloy steel case (E), with a threaded stud at one end and internal threads (B) at the opposite end. The construction embodies two transformers (C), each with its own primary and low impedance secondary windings enclosed in ceramic iron cup cores. Spaced between is a ferrous gap disc (I), the shaft of which is attached to one end of the load cell case at (G). In operation, the case elongates, thereby displacing the disc in relation to the transformers. This movement produces an electrical output exactly proportional to the displacement. The displacement is 0.005 in. at the maximum permissible load of 2,000 lb. The transformer windings are baked into the ceramic cores with moisture-proof epoxy resin. The entire assembly is sealed into the case by plug (J).

The instrument panel (Fig. 6b) contains, from left to right, the precision regulator for the wheel load control, the main regulator of the pneumatic system, the temperature monitor, the DC and AC voltmeters of the instrument and recorder circuits, respectively, the Dillon remote indicator and the CEC-DeVar 301 recorder. At the extreme right are the switches for selecting manual or automatic operation of the tester and for setting the desired time or distance intervals between cycles.

Figure 7a shows the Penn State road friction tester with the trailer wheel in test position. The water tank had to be opened to permit the installation of baffles. In closing it, the depression was left in the center to give increased view to the rear for backing up. On the water tank, a spare test wheel is carried. The truck spare wheel is mounted so that it extends past the hitch, thereby protecting it when the trailer is disconnected. The water pump and control mechanism, the pneumatic cylinders at the rear springs, and the batteries are accessible after removal of the truck spare wheel.

Figure 7b shows the trailer in transport position. The speed-measuring wheel is also raised. The temperature monitor is on the trailer fender, and the hose is carried in a pocket on the water tank.

Calibration Equipment

Availability of proper calibration equipment is a prerequisite for obtaining precise data from any tester. The calibration stand (Fig. 8a) was developed to increase the speed and precision of calibrating the Penn State trailer. The calibration stand is compact, can be carried by one man, and may be used with any trailer-type tester.

The stand consists of a base (1) which supports platform (2) via two ladder bearings (3). To insure alignment of platform and base, spacers (4) are inserted when positioning the test wheel on the stand, but are removed during calibration. The platform is attached to an air cylinder (7) which is pressurized by air supply (5). A precision gage indicates the pressure in the cylinder with a resolution of 0.1 psi which is equivalent to a force increment of 0.5 lb. (Because of the high sensitivity, the calibration stand may also be used to determine the static spring constant of tires in longitudinal direction. For this purpose a scale with a resolution of $^1/_{32}$ in. is provided.)

Calibration Procedure

The test wheel is placed on the platform of the calibration stand and locked by applying the brake (Fig. 8b). Wheel load and inflation pressure are checked or adjusted to the desired values and the recording system is switched on. The horizontal friction force F is simulated by increasing the pressure in the air cylinder by suitable steps. The friction force transmitted to the tire increases by corresponding increments to about 700 lb. Higher forces cannot be transmitted due to creep of the tire on the platform.

A tire with infinite longitudinal stiffness would make the force F_2 acting on the restraining rod directly proportional to F. On a tire of finite stiffness, the friction force F moves the center of the contact area and with it the vector of the wheel load L to the rear, thereby producing a moment, $L \times e$, which tends to turn the wheel in the same direction as the friction force F. Hence, F_2 is not directly proportional to F but increases more rapidly (Fig. 8c). The deviation from the straight line is determined by the ratio e/r of the deformation and the static radius. The relation between F and F_2 deviates progressively from linearity as the stiffness F/e of the tire decreases. Since new tires are stiffer than used ones, the calibration should be carried out only after the tire has been run 200 to 300 mi.

Erroneous results will be obtained if the calibration is attempted by applying a known torque to the test wheel. Such a procedure would provide a strictly linear, and therefore misleading, relation between friction force F and recorder deflection. For correct calibration the simulated friction force F must be transmitted through the tire used in the tests. Two tires having the same static radius r at identical wheel loads and inflation pressures do not necessarily have identical calibration curves.

Although e is usually small (0.3 to 0.5 in. for passenger car tires at a coefficient of 0.5) at a wheel load of 1,000 lb, a force of around 40 lb is added to the friction force F at a coefficient of 0.5. For routine surveys it is convenient to assume either a linear

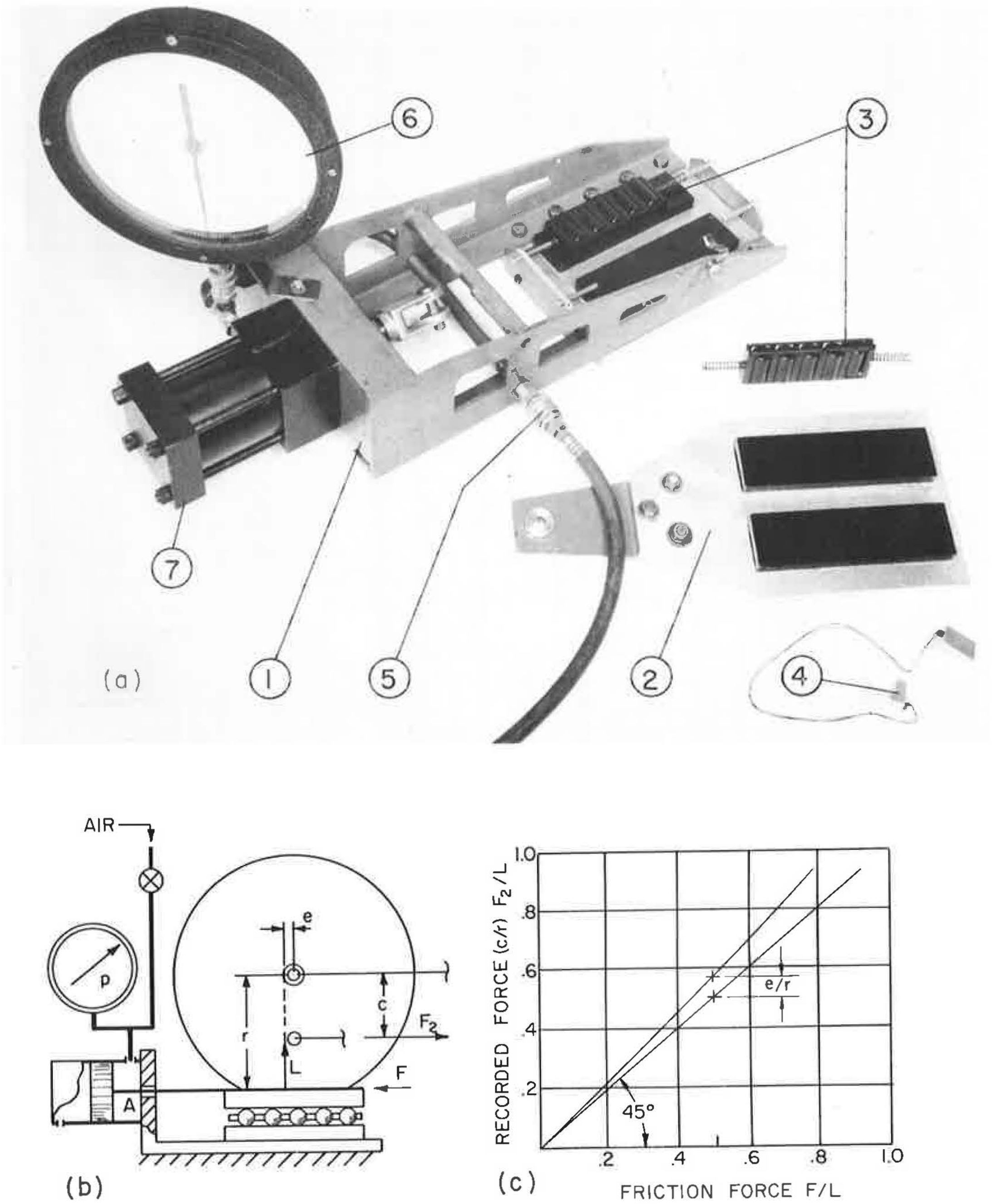

Figure 8. Calibration stand: (a) exploded view; (b) force diagram; and (c) calibration curve.

relationship (which exists at low coefficients) or slightly decrease the instrument gain to make the two curves (Fig. 8c) coincide better within the needed range. Slightly lower than the true values will then be read at low coefficients, but this may be considered to be on the safe side.

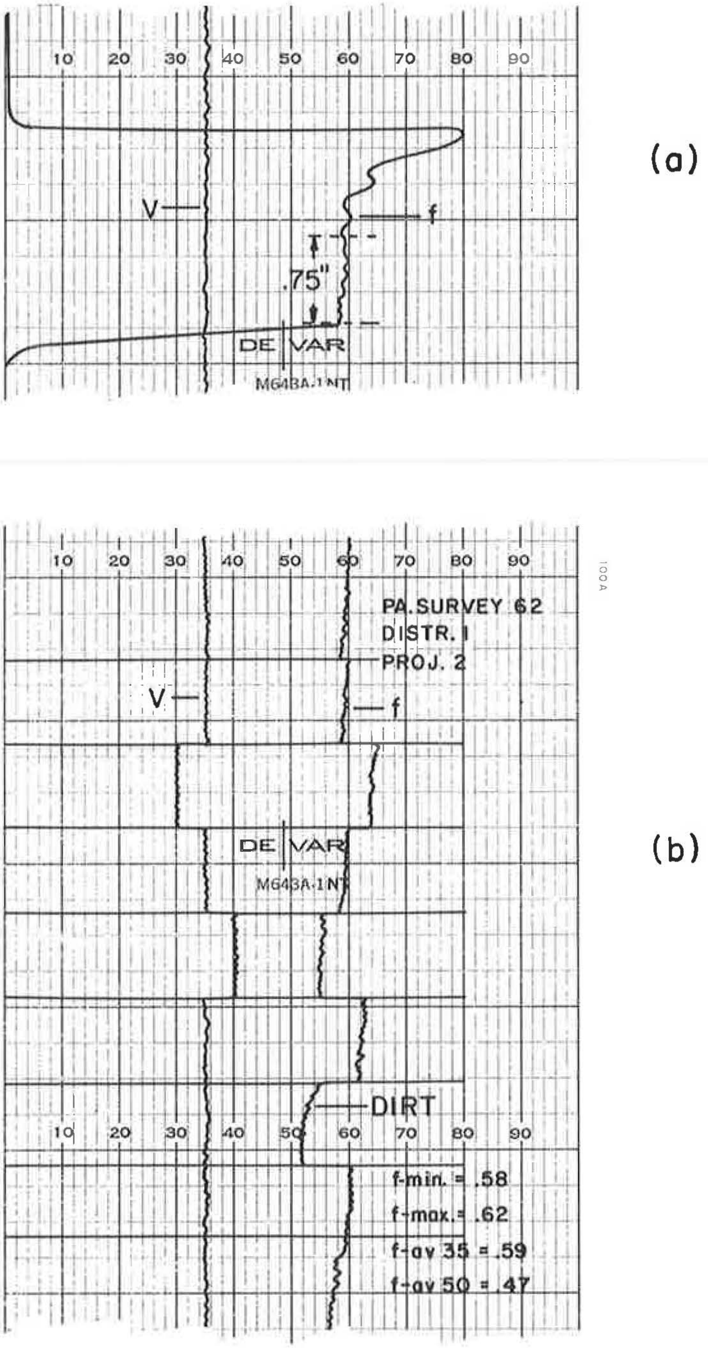

Figure 9. Typical records: (a) manually controlled test cycle; (b) series of automatically-controlled test cycles.

Record Evaluation

In addition to recording errors caused by tester design and instrumentation, errors can be introduced in evaluating the skid resistance trace of the recorder charts.

Figure 9a is a reproduction of a completely recorded cycle typical for testers shown in Figure 3b and 3c. The chart is read from the top. Due to the rapid deceleration of the wheel when the brake is first applied, the force transducer measuring F_1 or F_2 experiences a much larger force than does the tire. Hence the overshoot of the coefficient trace does not represent the skid resistance of the pavement. After the wheel has locked (at the point at which the trace first intersects the "60" chart line), the trace indicates the true coefficient. The temperature increase in the tire contact area is responsible for the tendency of the trace to drop further (Fig. 9b), but this drop may generally be ignored, provided the trace is always evaluated in the same manner.

In Figure 9a, a 0.75-in. section of trace f is averaged between the dashed lines and tabulated as a sliding coefficient of 0.59 at 35 mph (the speed is read from trace V). Since the initial portion of the trace is of no interest, it may be suppressed in routine surveys, partly to conserve paper and partly to eliminate the temptation of overrating the skid resistance of a pavement.

Figure 9b is a typical record from the 1962 survey of the Pennsylvania highway system. The chart section contains 9 individual tests with a sliding distance of 150 ft. The first two 35-mph tests (reading from top) show that the pavement has a very uniform friction level. The third test was run at 30 mph, the fourth again at 35 mph and the fifth at 40 mph. The last three provide information on the change of the sliding coefficient with speed. Test 6, again at 35 mph, reads higher than tests 1, 2 and 4, indicating a change in pavement texture. Test 7 is abnormally low. Since loose dirt was observed on the road during this test, measurement was ignored.

To describe the skid resistance of a particular highway section, the observed minimum and maximum coefficients and the average coefficient at 35 mph are reported. (The average coefficient is not necessarily the mean.) With the average coefficient at 35 mph and the slope obtained from the tests at 30 and 40 mph, the coefficient may be extrapolated to higher speeds.

In situations where traffic interference does not permit testing at or near the maximum traffic speed, it is convenient to make tests at different speeds in order to determine the coefficient vs speed slope of the pavement (7). The ability to change speed quickly between test cycles is a necessity for such a procedure. It can be employed only if the tester has an adequate weight-to-horsepower ratio and is readily maneuverable in traffic.

Sample Application

Any coefficient (slipping or sliding) is a performance value that is valid only for the particular set of conditions under which it was obtained. Since routine tests as a rule are conducted with a particular type of tire, it is of more than marginal interest to compare performance with tires typically used on automobiles.

Figure 10 compares the performance of the ASTM Standard tire with that of a relatively new and absolutely smooth Firestone Champion tire at three wheel loads, but constant inflation pressure. Although the data are valid only for the particular pavement on which the tests were made, they show certain trends which apply also to other conditions.

The curves have a common rapid drop of the sliding coefficients with speed. This pronounced drop is characteristic of all fine textured pavements, especially those with aggregates that do not polish readily and produce very high readings at low speeds. It is also typical that the smooth tire produces a lower coefficient (at speeds above 10 or 15 mph) that diverges progressively more from the coefficients of the treaded tires as the speed increases.

The ASTM Standard and the treaded Firestone Champion tire perform similarly. Their coefficients agree numerically at a point that shifts towards higher speeds as the wheel load is increased (arrows in Fig. 10). This shift in performance is brought about mainly by the two factors, contact length and wiping. At reduced wheel loads the Firestone tire provides higher coefficients than the ASTM tire due to the wiping action of the tread (the ASTM tire has only longitudinal ribs). As the wheel load increases, the contact length of both tires increases and gives the rubber elements more time to squeeze through the water film. The data show that the contact length has a larger influence than wiping as evidenced by the increase in the speed range in which the ASTM tire is superior.

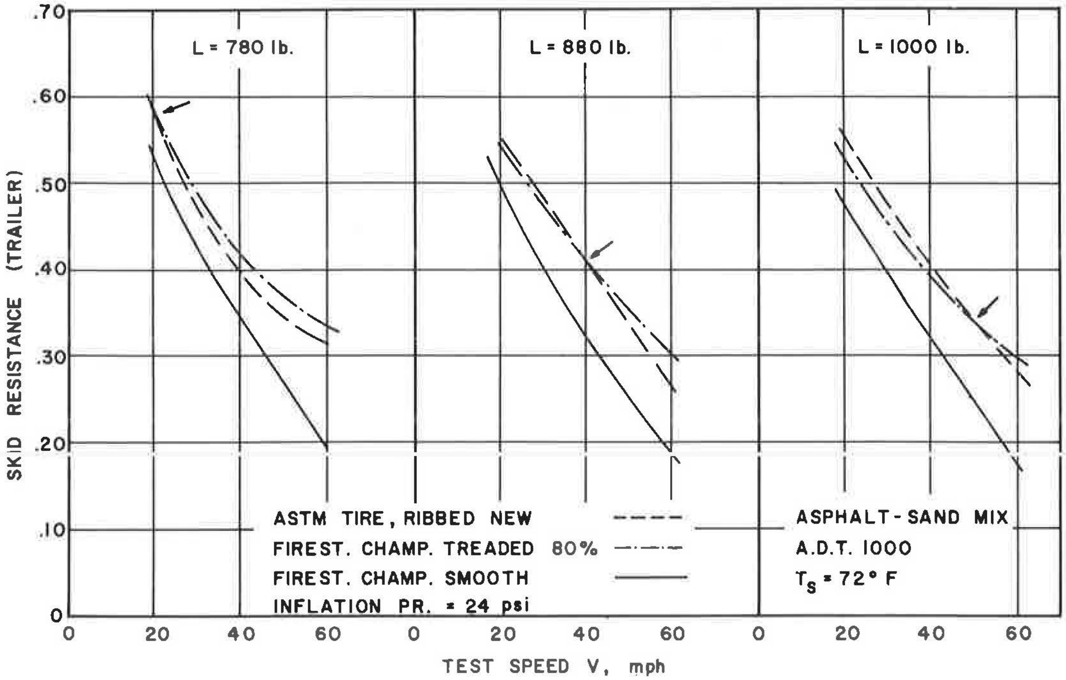

Figure 10. Effect of the tire tread design on skid resistance at different wheel loads.

The efficiency of the Penn State road friction tester is illustrated by the fact that the data were obtained by making four tests for each combination of tire tread, wheel load and speed, requiring a total of 108 test cycles. The entire 108 tests were completed in a little less than one hour, including the time for changing wheels and refilling the water tank.

PENN STATE DRAG TESTER

Design Concept

Under certain conditions trailer-type testers are not the best devices for measuring the skid resistance of pavements. This applies to rough primary roads, secondary and rural roads, and to intersection approaches. In stop and go traffic a full-scale tester loses its inherent advantages. A manual tester can be a useful substitute.

One of the objectives of the Penn State program was to evaluate existing portable testers with respect to their suitability for field tests. None of the designs seemed to satisfy all the requirements that are reasonably imposed on such a tester.

Since it must be anticipated that relatively untrained personnel will operate the tester simplicity of design and ease of operation must be combined with adequate accuracy. It would also be desirable for the tester to be able to measure rapidly a fairly large pavement section, thereby reducing the possibility that the skid resistance of a site is misjudged. Rapid data accession has the further advantage of reducing the exposure time of the operator to traffic. Finally a straightforward calibration procedure and a simple method for checking the accuracy of the instrument in the field were deemed necessary.

Because none of the existing portable testers fulfilled these requirements, a new type of tester was developed that meets the desired requirements. Because of its mode of operation it is referred to as a drag tester. Data obtained during the 1962 HRB-ASTM Correlation Study and at Penn State indicate that the drag tester correlates well with trailer-type testers on most pavements.

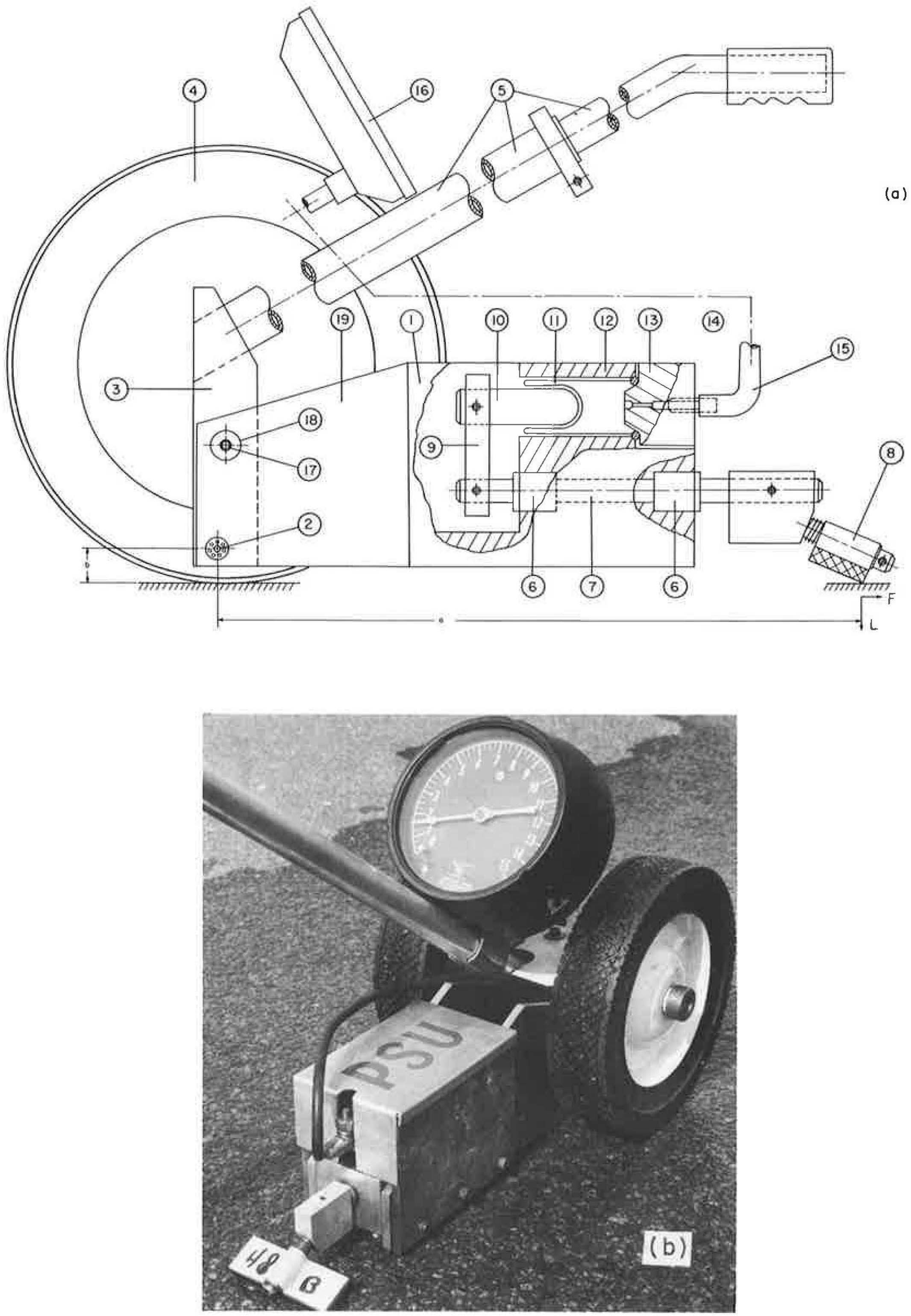

Figure 11. Penn State drag tester: (a) design drawing; (b) tester in use.

All testers operating at speeds below 10 or 20 mph have a disadvantage in that extrapolation of the skid resistance to higher speeds is unreliable when the geometric characteristics of the pavement surface is unknown. With the onset of hydrodynamic wedge formation under tire or rubber slider, the sliding coefficient decays more rapidly with speed on dense or fine textured pavements than on open or coarse pavements. To permit the extrapolation of the data of slow-speed testers, including those of the Penn State drag tester, a study is under way at Penn State that promises to provide a "drainage number" that is related to the pavement texture and thereby to the slope of the skid resistance vs speed curve.

Description

The drag tester is essentially a two-wheeled cart to be pushed by an operator over a wetted pavement at uniform walking speed (Fig. 11a).

The cart consists of housing (1) connected, via ball bearings (2), to block (3) to which are attached two wheels (4), and handle (5). The housing contains two ball bushings (6) which support hardened steel shaft (7). Attached to the latter is the rubber heeled slider (8) and connector (9) which rigidly connects the shaft with the transducer plunger (10).

The latter displaces the rolling rubber diaphragm (11) that seals the liquid-filled transducer cylinder (12). The diaphragm lip is retained by cover (13) and the cylinder is connected via restriction (14) and hose (15) to pressure gage (16). Because only low pressures can be generated in the system, the gage is of the bellow type. Since shaft is supported by ball bushings and because diaphragm simply rolls along as the plunger moves, the internal friction of the device is small compared to the friction forces measured and can be neglected. The travel of handle is restricted by stop (17) and hole (18) in the housing extension (19), but is sufficient to permit the operator adequate handle movement without altering the slider load.

Theory of Operation

The cart is placed in position on the wetted pavement and pushed along at uniform speed. The normal load L, due to the weight of housing, presses the edge of the rubber slider onto the pavement. The resulting friction force F attempts to displace slider, shaft, connector, and plunger. The resulting displacement of the liquid increases the pressure in the hydraulic system and causes gage to indicate a pressure proportional to the friction force F.

By definition, a coefficient of skid resistance or friction is

$$f = F/L \tag{7}$$

and

$$F = Ap \tag{8}$$

in which A is the effective area of the transducer and p is the pressure in the hydraulic system.

Thus,

$$f = (A/L)p \tag{9}$$

or the coefficient is proportional to the pressure p. To keep the unloading effect of the moment $F \times b$ on the slider load L_0 small, the ratio b/a is kept small (1/20). This keeps the error (made by assuming L to be equal to the static value L_0) below 3 percent up to coefficients of 0.6. The pressure gage has a face that indicates the coefficient multiplied by 10.

Calibrating Procedure

Since the slider load L is provided by the weight of the housing, the initial calibration and any recalibration are very simple. The procedure consists of two steps: finding the exact relation between the (horizontal) friction force F and the pressure dis-

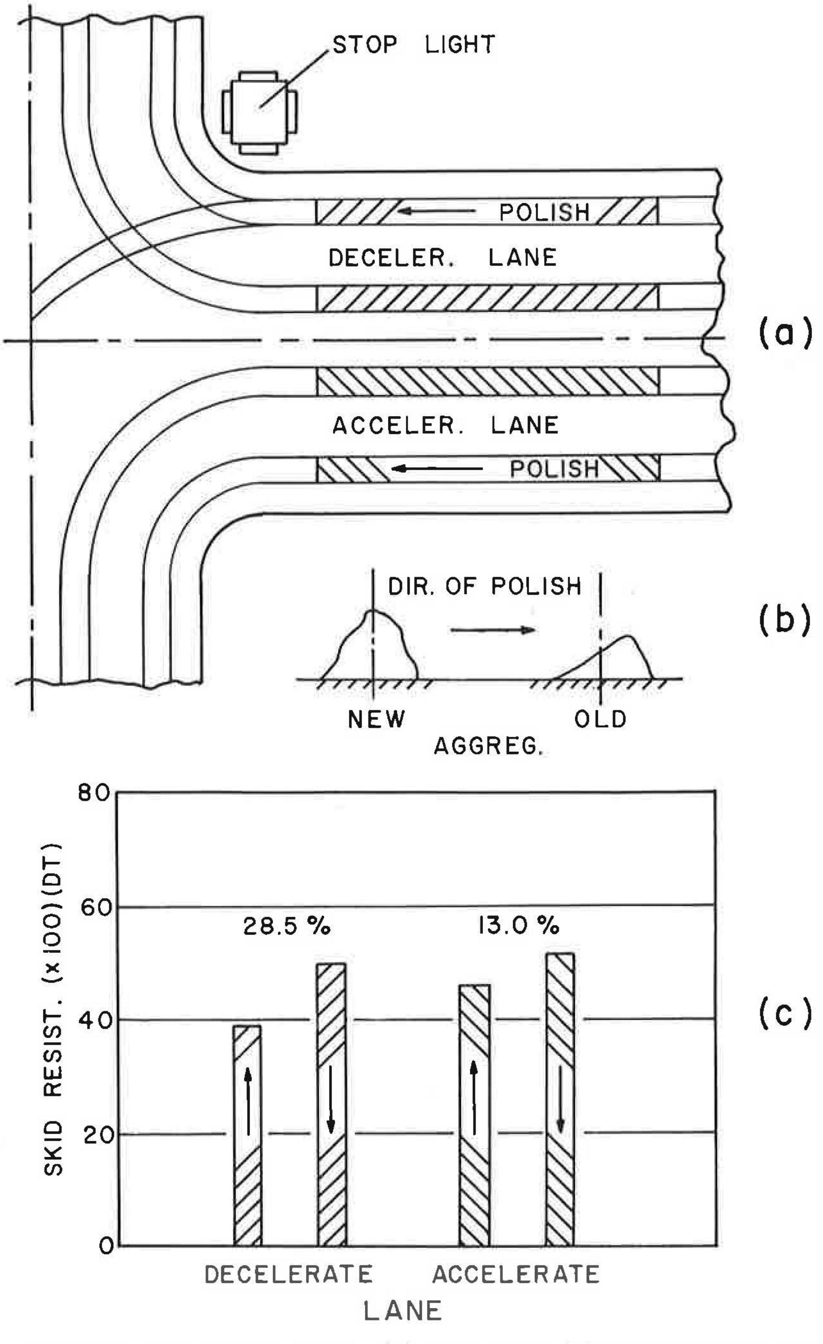

Figure 12. Pavement heel and toe wear: (a) test site; (b) unsymmetrical wear of aggregate; and (c) coefficients of test site.

played on the gage, and adjusting the slider load L to a value that insures correct indication of the coefficient by the pressure gage.

First, the tester is placed on a table and housing (Fig. 11a) is supported in such a manner that it and shaft are in a horizontal position with the slider edge clearing the surface. The pin holding the slider in place is removed and a 10-lb test nylon line is threaded through the pin hole. A small pulley supported on lightly oiled precision ball bearings is fastened to the edge of the table so that the fastened end line is horizontal and in line with shaft. A tray for carrying the calibration weights is attached to the free end of the line.

The no-load reading of the pressure gage must be adjusted before the actual calibration is made. This reading is about 0.5 on the gage scale because of the hydraulic head between plunger and the gage bellows.

With the housing restrained to resist the pull applied by the line, weights are placed on tray in 0.5-lb increments until a maximum load of 5.5 lb is reached. The corresponding numbers are read from the dial of the pressure gage. A plot of the dial readings against the force applied must give a straight line passing through the origin. The effective diaphragm area A was so chosen, that a 4.0-lb load should give a gage reading of approximately 10 (which is equal to a coefficient of 1.0).

Second, for the pressure gage to display the skid resistance f directly, the slider load must be made exactly equal to the horizontal force which causes the pressure gage to read 10.

With the slider reinstalled the slider edge is placed on the platform of a 10-lb capacity weighing scale. The wheels of the cart are supported to secure a horizontal position of the housing and the handle is supported in a position within the limits provided by stop and hole.

If the weighing scale shows a deviation of the slider load from the required slider load as previously determined, adjustment is made by adding or removing material from the housing end plate.

The drag tester is now calibrated to display the skid resistance directly.

To facilitate a check on the calibration in the field, stop is removed and the housing turned 90° to a vertical position with the slider end down. The combined weight of the slider, shaft, connector, and plunger causes the gage to indicate a pressure or corresponding skid resistance. This is a simple way of applying a fixed load to the hydraulic system. The gage reading is recorded and can be easily checked.

Sample Application

Determining the skid resistance on or near city intersections is an example of an application for which a portable tester is particularly suited, provided the data can be obtained quickly so that natural gaps in the traffic flow can be used. Figure 12a shows an intersection controlled by a traffic light. The Penn State drag tester was employed not so much for measuring the skid resistance in the lanes leading in and out of the intersection, but to demonstrate the existence of "heel" and "toe" wear of the pavement aggregate.

The development of heel and toe wear on the elements of the tire tread and the significant influence of this wear on the sliding coefficient were first reported by Gough et al., in 1956 (11). Because aggregate polish is brought about by the motion of the tread elements relative to the pavement surface and this motion is strongly directional when large driving or braking forces are transmitted to the ground, heel and toe wear of the aggregate is likely to occur in the manner illustrated by Figure 12b. It was expected that skid resistance measurements made in the direction of polish would yield lower values than measurements made in the opposite direction. It was further expected that the difference in skid resistance would be higher in the decelerating lane because traffic decelerates more rapidly than it accelerates.

A 20-ft test section was measured off in both the decelerating and accelerating lanes, and eight tests were made with the drag tester in the right-wheel track of each lane. Four measurements were made in the direction of the polishing action and four in the opposite direction. The mean values obtained in these tests are plotted in Figure 12c.

The results illustrate the existence of definite heel and toe wear in both lanes. There is a difference of 28.5 percent in the decelerating lane against 13.0 percent in the accelerating lane. This shows that under certain conditions the directional character of the polishing action must be taken into account if the data are to tell the full story.

The important result is that the 16 measurements were made in less than 10 min and only 12 to 14 sec were required per test. Thus, the operator could utilize natural gaps in the traffic flow without hazard. Since the drag tester is used by the operator while walking, a large number of tests can be performed in a day without undue strain. Furthermore, if there is not more than 300 ft between sites, the tester may be rolled by raising the handle to lift the slider off the pavement. The tester can easily be carried over longer distances because it weighs only 20 lb.

OUTLOOK

Vehicle speeds and the number of passes per mile of highway will continue to increase during the next decades. By 1970 the average vehicle speed will have increased by approximately 22 percent over the 1950 speed, requiring a 50 percent higher skid resistance. The number of passes will be double the 1950 figures. Highway engineers will not only have to provide more road mileage that is skid resistant by present-day standards, but the highways will have to have a higher skid resistance and retain it 5 to 10 years. If these goals are not reached, additional accidents attributable to skidding will occur at friction levels currently regarded as adequate.

Although it may be assumed that advances will be made by the automobile and tire industries to help meet the increased frictional demand, it is quite likely that the main burden of improvement will fall upon the highway agencies. High-speed tests on wet pavements and advances in the understanding of the squeeze film or drainage problem indicate that factors such as tire geometry, tread design, rubber composition and operational variables such as wheel load and inflation pressure do have an important bearing on friction. However, the "openness" of the pavement, the microscopic shape and molecular properties of aggregate and binder determine the skid resistance of a given pavement-tire combination more than anything else. Whereas openness governs the sinkage rate or time it takes the bulk of water to be squeezed out of the foreward zone of the tire contact area, the microroughness of the aggregate, the resulting micropressure distribution and molecular properties determine what magnitude of friction develops once contact has been made by a tire element with the surface.

The skid resistance problem has been described elsewhere (9) as a control problem consisting of the three phases: skid resistance measurement, comparison of the measured values against a standard of adequacy, and if necessary, upgrading the skid resistance of the pavement. To apply this approach successfully, the methods of measurement must be improved and uniform test procedures established. With such procedures, testers employing the same mode of operation will read identical coefficients on the same surface. For the British pendulum tester, this state has been reached with the development of a standard operating procedure by the ASTM Committee E17 on Skid Resistance in 1962. The development of a similar standard procedure for trailer-type testers is much more urgent because they, and not portable testers, will provide the bulk of skid resistance data during the coming years.

The 1962 HRB-ASTM Correlation Study has shown that significant progress has been made in the design and refinement of trailer-type testers since the 1958 Correlation Study, and the close agreement in the performance of these testers warrants the development of a trailer test procedure. This does not mean, however, that improvement of these testers should not continue. Still greater precision, dependability and efficiency would not be amiss. Because a large body of experience has been acquired by various agencies, the time may be at hand to agree upon one trailer design that could be produced in quantities to provide every highway department in the United States with a tester.

Meanwhile, the search for better methods of skid resistance measuring methods which might eventually eliminate the need for dragging tires or rubber sliders over the pavement should continue.

Also, realistic figures for minimum permissible skid resistance values must be developed to judge the adequacy of the surveyed pavements. Because it is not likely to be economically feasible to make all highways equally skid resistant, the standards must be flexible. Different standards of minimum skid resistance may apply to different highway types, straight stretches, curves, approaches to intersections, and grades.

Highway agencies must develop and put into practice long-range programs for continuous improvement of the skid resistance potential of pavements. Skid and polish resistance of aggregates must be considered important properties of pavements, just as are those defined by the Marshall test. It is not sufficient that a highway department know how to build skid resistance into a pavement, it also must see to it that the contractors do. The factors that control skid resistance are as vital in specifications as a are asphalt content, aggregate size, and temperature of the mix.

Although basic research will provide generally valid information, the variability of the materials used as aggregates makes it mandatory that experimental highway sections be constructed of economically attractive aggregates, upgraded with skid resistance improving additives where needed. Careful traffic counts and other pertinent observations should be made during the entire life of the experimental pavements. Since it takes years to fully appraise the performance of a pavement, these experimental sections should be placed now.

Other aspects of the skid resistance problem involve better road layouts and better engineered traffic control systems that reduce the number of situations in which motorists are suddenly confronted with the necessity of executing maneuvers that require friction levels in excess of those available. The motoring public must become more aware of the factors that lead to skidding and learn how to cope with them. States that have or will introduce compulsory vehicle inspection should include tires in the inspection procedure. Tires should carry knobs or ribs indicating a safe operating level. Such easily recognizable safety marks would enable all enforcement agencies to keep unsafe tires off the roads.

The skid resistance problem is too diverse and complex to be solved in a few years by a few agencies and research laboratories. A problem of this magnitude requires cooperation, leadership and long-range planning.

ACKNOWLEDGMENTS

The development of the road friction tester and the research involved in this development are a part of the activities of the Automotive Safety Research Program of the Department of Mechanical Engineering of the Pennsylvania State University.

The drag tester is being developed under the Joint Road Friction Project of the Pennsylvania Department of Highways and the University. The Department's permission to include certain data and information obtained in the course of this project is acknowledged.

REFERENCES

1. Moyer, R. A., "Skidding Characteristics of Automobile Tires on Road Surfaces and Their Relation to Highway Safety." Iowa Eng. Exp. Sta., Bull. 120 (1934).
2. Mills, J. P., and Shelton, W. B., "Virginia Accident Information Relating to Skidding." Proc. First Internat. Skid Prevention Conf., Va. Council of Highway Investigation and Research, Univ. of Va., Part I, p. 12 (1958).
3. "Highway Statistics." U. S. Department of Commerce, Bureau of Public Roads, p. 79 (1960).
4. "Automobile Facts and Figures." Automobile Manufacturers Assn., p. 40 and 48 (1958).
5. "The Highway Transportation Story." National Highway Users Conference, p. 35 and 37 (1961).
6. "Highway Statistics." Tables M-2, M-3 (1945-57).
7. Schulze, K. H., and Beckmann, L., "Friction Properties of Pavements at Different Speeds and Their Changes by Traffic." Paper No. 87C, ASTM Annual Meeting, New York (1962).
8. Giles, C. G., and Sabey, B. E., "A Note on the Problem of Seasonal Variations in Skidding Resistance." Proc. First International Skid Prevention Conf., Va. Council of Highway Investigation and Research, Univ. of Va., Part II, p. 563-568 (1958).
9. Kummer, H. W., and Meyer, W. E., "Measurement of Skid Resistance." Paper No. 87A, ASTM Annual Meeting, New York (1962).
10. Meyer, W. E., and Kummer, H. W., "Mechanism of Force Transmission Between Tire and Road." SAE Paper 490A (1962).

11. Gough, V. E., Hardman, J. H., and Maclaren, J. R., "Abraded Tire Treads." Trans. of the Institution of the Rubber Industry, Vol. 32, p. 46 (1956).

Appendix

PENN STATE ROAD FRICTION TESTER

Performance Record

The trailer has been used for approximately 12,000 tests since 1958. After the completion of the road friction tester (summer 1962), the unit participated in the HRB-ASTM Correlation Study at Tappahannock, Va. in which 1,200 test cycles were performed. Then, a survey of the Pennsylvania highway system was carried out for the Pennsylvania Department of Highways. Approximately 5,200 skid resistance measurements were made while traveling 4,000 mi. The survey was completed in 35 working days, so that on an average day, 150 tests were made and 115 mi traveled.

During the survey, the average fuel consumption was 12.1 mpg in travel between test sites and 8.9 mpg during testing. With water tank full (or 48 lb GVW/HP), the road friction tester was capable of testing grades up to 10 percent at the assigned speeds. With the tank empty (or 36 lb/HP), the tester easily maintained average passenger car speeds during travel from site to site. The maneuverability of the tester proved excellent due to good all-around vision and the ability to raise the test wheel for backing and turning on narrow roads. The unit handled well. The suspension dynamics were very satisfactory with full as well as empty water tank. Only very minor failures were encountered in the 10,000 tests conducted since June 1962.

Operating Procedure

The following procedure was employed in the 1962 skid resistance survey of the Pennsylvania highway system:

Transportation.—Lift test and speed control wheels and secure. Set primary air pressure regulator to 100 psi to insure adequate road clearance of the trailer. For longer trips, empty water tank. Switch on trailer tail light.

Preparation.—Lower test and speed control wheels. Check pressures in load cylinder, test tire and control wheel tire. Fill water tank from hydrant after flushing hydrant. Check calibration of force transducer by locking test wheel, and with automatic transmission in low, apply engine power until recorder displays a coefficient of 0.50. Compare with reading on remote indicator. Set water flow rate to provide a theoretical water film thickness of 0.5 mm at the proposed test speed. Reset cycle counter to zero and perform one cycle to check out electric, pneumatic and water system.

Testing.—Test at 35 mph on primary, secondary and rural roads, and 60 mph on limited-access highways and turnpike. Traffic permitting, conduct one test each at 30 and 40 mph on each pavement section of primary, secondary and rural roads, and at 40 and 50 mph on limited-access highways and turnpike. Test in the left-wheel track of the traffic lane. In special situations, test in the track that appears most polished. Use flashers and beacon sparingly, but as demanded by traffic. Record data, site identification, type of pavement, texture, surface condition, tire temperature and any unusual observations.

Specifications

Gross weight (water tank filled)	7,760 lb
Dry weight	5,760 lb
Overall length	235 in.
Overall width	70 in.
Overall height	70 in.
Maximum travel speed	70 mph
Maximum test speed	70 mph
Design test speed	35 to 60 mph

Cycle duration	10, 15 or 20 sec
Tests per mile	10, 7.5 or 5
Theoretical waterfilm at speeds up to 70 mph	0.5 mm
Capacity of water tank	250 gal
Time for filling (at 100 psig water pressure)	3 min
No. of cycles at 35 mph without refill	150
Coverage factor C_c	0.3 to 0.5
Test frequency C_f	2

Towing Vehicle

Make	Chevrolet
Type	C25 (chassis with cab)
Engine	160 hp
Transmission	2-speed Powerglide
Differential	Limited slip type
Tires	8 × 17.5, 8 ply

Trailer

Overall length	60 in.
Overall width	15 in.
Height	32 in.
Wheel axis to pitch axis	40.00 in.
Wheel axis to yaw axis	43.75 in.
Travel of trailer main arm:	
Around pitch axis	± 8°
Around yaw axis	± 45°
Total trailer weight	300 lb
Dead weight on wheel	150 lb
Wheel load range	150 to 1,000 lb
Test wheel, passenger car rim and tire	7.50 × 14

PENN STATE DRAG TESTER

Operating Procedure

The following procedure was employed in 1962 HRB-ASTM Correlation Study at Tappahannock, Va.

General.—When transporting tester, push upper portion of handle all the way in. For operation, adjust handle extension to most confortable position and firmly lock clamp. Do not let tester rest on rubber slider for prolonged periods of time. When testing, make sure that vertical movement of handle remains within limits given by the stops. To determine these limits, move handle up and down several times with tester at rest. Walk at uniform and brisk pace, but do not run.

Preparation for Test.—Check slider for wear. Use new slider when edge is worn more than ¼ in. as measured with a rule laid flat across the width of the slider. Select path for test. Remove loose particles and dust by thoroughly flushing surface. When testing on highways, select most heavily polished sections (usually the left-wheel track of the right traffic lane) and test in the direction of polish to obtain lowest possible readings.

Testing.—Push tester along selected and wetted path for approximately 15 ft and observe gage pointer. When steady state conditions are attained, note gage reading and lift off slider by raising handle. Proceed several feet along test path with slider raised, then re-establish contact between slider and pavement by lowering handle for second reading. Make three observations during one run and record average reading. Measure and record temperature of wetted pavement. Determine whether surface texture is fine (⅛ in. average surface dimension of aggregate), medium (¼ in.), or coarse (½ in. or larger).

Specifications

Total weight (dry)	20 lb
Load on slider	4.0 lb
Normal pressure on slider[1]	10 psi
Overall height, handle extended	35 ± 5 in.
Overall length, handle extended	48 in.
Height, handle retracted	20 in.
Length, handle retracted	35 in.
Overall width	8 in.
Wheel diameter	7.75 in.
Approximate speed during testing	3 mph
Slider dimensions (same as for British pendulum tester)	3 × 1 × ¼
Drag length for average test	15 ft
Area surveyed per test	4 ft^2
Number of tests per slider edge[2]	100
Capacity of water container	2 qt
Number of tests per fill	3

---

[1] With wear of ⅛ in. as measured with a rule laid flat across the width of the slider.

[2] Tests on a uniform, fine sand, textured asphalt pavement have shown that a slider edge can be used for a total drag distance of 1,500 ft or more without objectionable wear or detectable change in the sliding coefficient.