Vertical Stresses Under Certain Axisymmetrical Loadings

MILTON E. HARR and CHARLES W. LOVELL, JR.,
Associate Professors of Civil Engineering, Purdue University

This paper is concerned with the definition of vertical normal stresses in an isotropic, linearly elastic half-space loaded axisymmetrically by an element that is flexible and produces only normal loadings at the contact with its foundation. Following the presentation of a general formulation for any axisymmetrical loading function, integrations are performed for some specific loading functions. The variation of vertical normal stress with vertical and lateral position in the mass is graphically illustrated for a uniform loading and for a parabolic loading function. For a conical loading function, centerline vertical normal stresses only are computed.

Centerline stresses are compared for the three loading functions. In addition, stresses at various vertical and lateral positions are compared for the parabolic loading function and an approximation of it afforded by a series of disks. Practical use of the particular vertical stress solutions is suggested by example, including a preload embankment for a tank structure.

•STRESS conditions within a loaded earth mass are of interest to the potential solution of a variety of engineering problems. The magnitude and distribution of vertical normal pressures are required particularly in the determination of settlements.

In the stress analysis it is necessary to define: (a) the loaded area and the distribution of pressures over it; (b) the boundaries of the soil layer(s) loaded and the stress and/or displacement values at these boundaries; and (c) the relation between stress and strain in the loaded layer(s).

The equations and plots presented are for a set of assumptions that can be expressed both physically and theoretically (Fig. 1). A single homogeneous and semi-infinite layer (uniform half-space) has applied to its horizontal boundary a load distribution that is symmetrical about the vertical z axis. The loading element is a flexible one, and there is no friction between it and the loaded element ($\tau_{zx} = \tau_{zy} = 0$). The soil layer is both isotropic and linearly elastic. It is assumed that the strains are small and that the soil behaves as a continuum. Body forces are set equal to zero.

Within the restrictions of these assumptions, a general formulation for any axisymmetrical loading is developed. This is followed by integrations which produce particular solutions for certain specific loadings. Although much of the material presented here may be found in various forms in other references, it was felt that an orderly development of it, with certain original contributions, in a widely available engineering publication would be of considerable value. Practical applications of these particular solutions, both in direct and superposition of components form, are suggested.

FORMULATION OF GENERAL AXISYMMETRICAL LOADING

The formulation of the vertical normal stress (σ_z) at any point in an isotropic and linearly elastic half-space due to any flexible and frictionless axisymmetrical

Paper sponsored by Committee on Stress Distribution in Earth Masses.

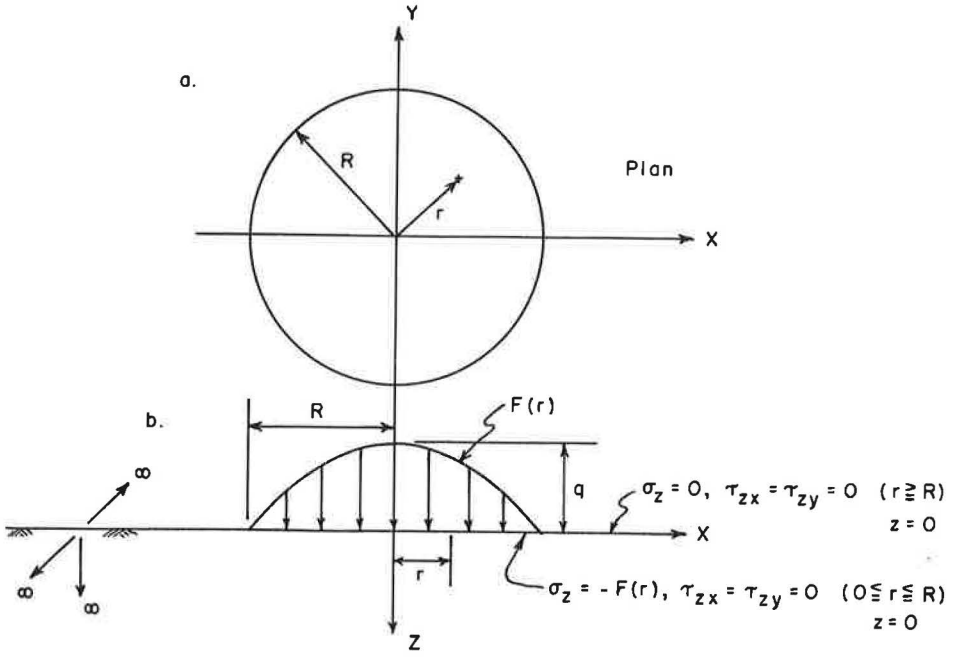

Figure 1. General axisymmetrical loading.

loading[1] (Fig. 1) can be stated as follows (1):

$$\sigma_z = \left[\frac{\partial \phi}{\sigma z} - z\frac{\partial^2 \phi}{\sigma z^2}\right] \tag{1}$$

in which

$\phi = \int_0^\infty D(\alpha)\, J_0(r\alpha) e^{-\alpha z}\, d\alpha$, $D(\alpha)$ = unknown coefficient to be determined from boundary conditions at $z = 0$ (plane of loading);

$J_0(r\alpha)$ = Bessel's function of the first kind of zero order; and

$r = \sqrt{x^2 + y^2}$

The axisymmetric loading function (interior to the circle of radius R) can be expressed as the Fourier-Bessel integral,

$$F(r) = \int_0^\infty \alpha J_0(r\alpha)\, D(\alpha)\, d\alpha \tag{2}$$

in which

$D(\alpha) = \int_0^\infty xF(x)\, J_0(\alpha x)\, dx$; and

$F(x)$ = the intensity of loading at $z = 0$.

[1] The generalized Boussinesq problem.

DISTRIBUTION OF VERTICAL STRESS UNDER UNIFORMLY LOADED CIRCULAR AREA

For this case $F(x) = q =$ constant, and hence, from Eq. 2,

$$F(r) = Rq \int_0^\infty J_1(R\alpha)\, J_0(r\alpha)\, d\alpha \tag{3a}$$

At the loading surface $(z = 0)$, and from Eq. 1,

$$(\sigma_z)_{z=0} = \left(\frac{\partial \phi}{\partial z}\right)_{z=0}$$

where, by substitution for ϕ,

$$(\sigma_z)_{z=0} = -\int_0^\infty \alpha D(\alpha)\, J_0(r\alpha)\, d\alpha \tag{3b}$$

On the loading surface, as

$$F(r) = -(\sigma_z)_{z=0}$$

from Eqs. 3a and 3b,

$$D(\alpha) = RqJ_1 \frac{(R\alpha)}{\alpha}$$

Substituting $D(\alpha)$ in Eq. 1, the vertical normal stress at any radial distance r and any depth z is

$$\sigma_z = -Rq \int_0^\infty J_1(R\alpha)\, J_0(r\alpha)\, (1+z\alpha)e^{-z\alpha} d\alpha \tag{3c}$$

Performing the indicated integration in Eq. 3c, Egorov (1) obtained

$$\sigma_z = q \left\{ A - \frac{m}{\pi\sqrt{m^2+(1+t)^2}} \left[\frac{m^2-1+t^2}{m^2+(1-t)^2} E(k) + \frac{1-t}{1+t} + \pi_0(k, n) \right] \right\} \tag{3d}$$

in which

$E(k)$, $\pi_0(k, n)$ = complete elliptic integrals of the second and third kind, respectively, of modulus k and parameter n (4);

$m = z/R$;

$t = r/R$;

$k^2 = \dfrac{4t}{m^2+(t+1)^2}$;

$n = -\dfrac{4t}{(t+1)^2}$; and

$$A = \begin{cases} 1, & r < R \\ \frac{1}{2}, & r = R \\ 0, & r > R \end{cases}$$

For the special case of vertical normal stress under the center of the uniformly loaded circular area $(r = 0)$,

$$(\sigma_z)_{r=0} = q\left[1 - \frac{m^3}{\sqrt{(1+m^2)^3}}\right] = q\left\{1 - \frac{1}{\left[\left(\frac{R}{z}\right)^2+1\right]^{3/2}}\right\} \tag{3e}$$

Equation 3d is plotted as Figure 2.

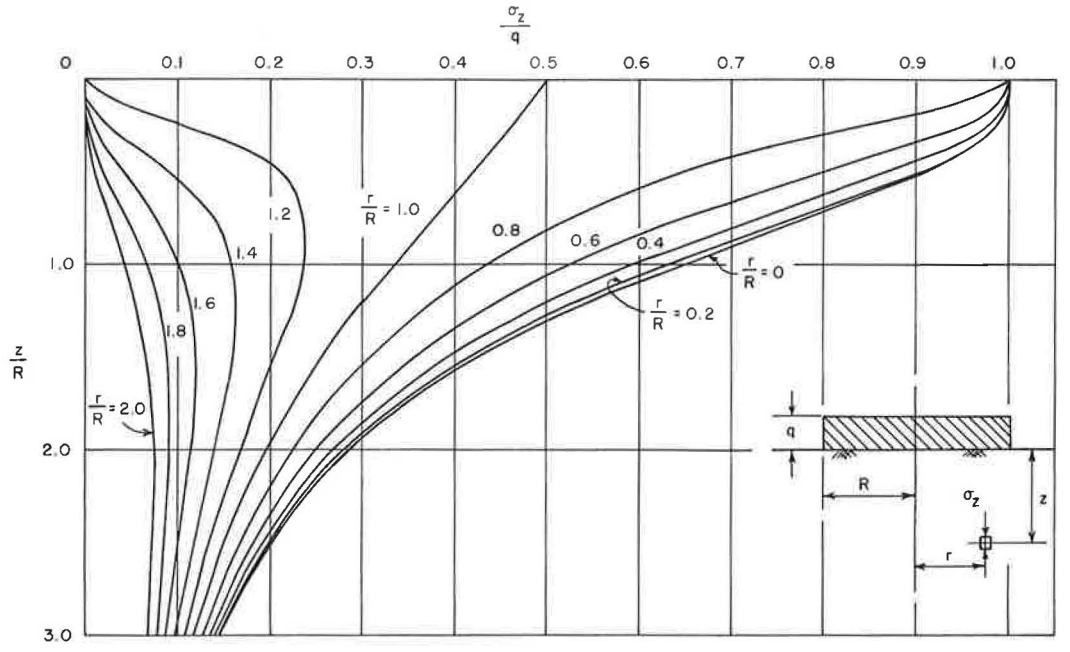

Figure 2. Uniform load (flexible and frictionless) over a circular area—after Egorov (1).

For examples of other approaches to this solution see Terzaghi (2) and Jurgenson (3). The presentation here follows more closely to that of Egorov (1).

DISTRIBUTION OF VERTICAL STRESS UNDER CIRCULAR AREA WITH PARABOLIC LOADING FUNCTION

The loading is a parabola of revolution, symmetrical about the z axis (Fig. 1b). For this case $F(x) = q\,(1 - x^2/R^2)$, hence from Eq. 2,

$$D(\alpha) = q \int_0^R J_0(\alpha x) \left[1 - \frac{x^2}{R^2} \right] x dx$$

Performing the indicated integration (cf. Eq. 9, p. 63, McLachlan, 5):

$$D(\alpha) = \frac{2q}{\alpha^2} J_2(\alpha R)$$

Substituting $D(\alpha)$ into the expression for ϕ (Eq. 1) and in turn substituting in Eq. 1, the vertical normal stress is

$$\sigma_z = -2q \int_0^\infty \left(\frac{1+\alpha z}{\alpha} \right) J_2(\alpha R)\, J_0(r\alpha) e^{-z\alpha} d\alpha \tag{4a}$$

or

$$\frac{\sigma_z}{2q} = \int_0^\infty J_2(\alpha R)\, J_0(\alpha r) e^{-z\alpha} \frac{d\alpha}{\alpha} + z \int_0^\infty J_2(\alpha R)\, J_0(\alpha r) e^{-z\alpha} d\alpha$$

$$= I_1 + I_2 \tag{4b}$$

The integrals I_1 and I_2 were obtained (cf. p. 399, Watson, 6) for values of $z > R$ as

$$I_1 = \frac{1}{8\left(1+\frac{z^2}{R^2}\right)} \sum_{m=0}^{\infty} (-1)^m \left[\frac{\frac{r^2}{R^2}}{4\left(1+\frac{z^2}{R^2}\right)}\right]^m \frac{(2m+1)!}{(m!)^2} \, {}_2F_1$$

$$m+1,\ \tfrac{3}{2}-m;\ 3;\ \frac{R^2}{R^2+z^2} \tag{4c}$$

$$I_2 = \frac{\frac{z}{R}}{8\left(1+\frac{z^2}{R^2}\right)^{3/2}} \sum_{m=0}^{\infty} (-1)^m \left[\frac{\frac{r^2}{R^2}}{4\left(1+\frac{z^2}{R^2}\right)}\right]^m \frac{(2m+1)!}{(m!)^2} \, {}_2F_1$$

$$m+\tfrac{3}{2},\ 1-m;\ 3;\ \frac{R^2}{R^2+z^2} \tag{4d}$$

where the hypergeometric function

$${}_2F_1(\alpha,\ B;\ \rho;\ z) = \frac{(\alpha)_n (B)_n z^n}{n!\,(\rho)_n}$$

and

$$(\alpha)_n = \alpha(\alpha+1)\,(\alpha+2)\ .\ .\ .\ (\alpha+n-1)$$

It has been proved that I_1 and I_2 are absolutely convergent only in the case $|r| < z$.

The series in Eq. 4c and 4d were programmed and computed for a large range of values. A plot of the resulting stress distribution as a function of z/R is shown in Figure 3. The dashed curves are only approximate, as a consequence of the range of convergence of Eqs. 4c and 4d for large values of r/R.

When $r = R$ (beneath the perimeter of the loaded area), the integrals I_1 and I_2 simplify to (cf. p. 402, Watson, 6).

$$I_1 = \tfrac{1}{2}\left(\frac{R^2}{4z^2}\right) + \frac{R^2}{2z^2} \sum_{m=1}^{\infty} (-1)^m \left(\frac{R}{z}\right)^{2m} \frac{(m+1)\,(2m+1)^2}{[(m+2)!]^2} \tag{4e}$$

$$I_2 = \frac{R^2}{4z^2} + \frac{R^2}{4z^2} \sum_{m=1}^{\infty} (-1)^m \left(\frac{R}{z}\right)^{2m} \frac{1}{(m!)^2\,(m+2)^2} \tag{4f}$$

DISTRIBUTION OF VERTICAL STRESS UNDER CENTER OF CIRCULAR AREA WITH PARABOLIC LOADING FUNCTION

For this case, $r = 0$, hence $J_0(0) = 1$, and Eq. 4b reduces to

$$\left(\frac{\sigma_z}{2q}\right)_{r=0} = \int_0^{\infty} \frac{J_2(\alpha R)}{\alpha} e^{-\alpha z}\, d\alpha + z \int_0^{\infty} J_2(\alpha R) e^{-\alpha z}\, da \tag{5a}$$

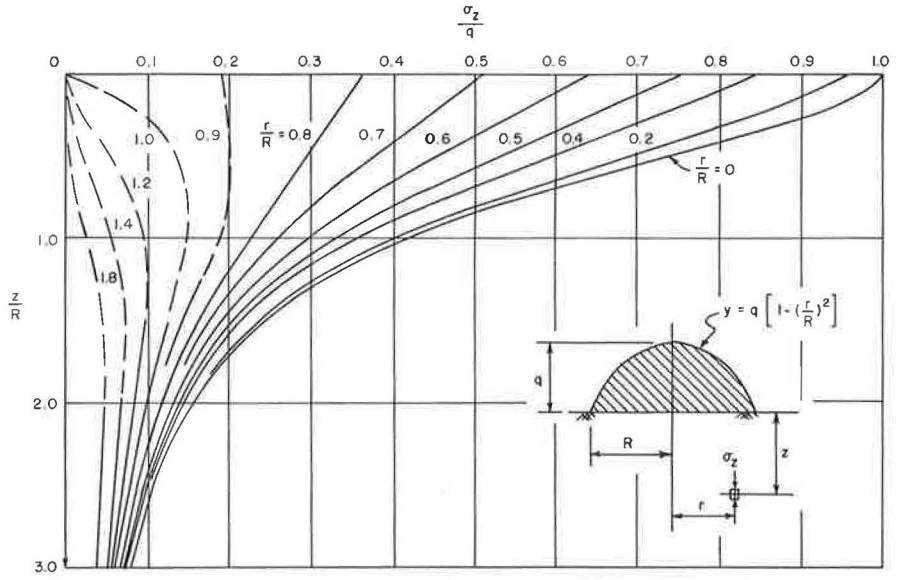

Figure 3. Parabolic load (frictionless and flexible) over a circular area (dashed portions are approximate).

Performing the indicated integration (cf. Eqs. 7 and 8, p. 386, Watson, 6),

$$\left(\frac{\sigma_z}{q_0}\right)_{r=0} = \left[\frac{1}{\frac{z}{R}+\sqrt{1+\left(\frac{z}{R}\right)^2}}\right]^2 \left[1 + \frac{2\left(\frac{z}{R}\right)}{\sqrt{1+\left(\frac{z}{R}\right)^2}}\right] \tag{5b}$$

DISTRIBUTION OF VERTICAL STRESSES UNDER CENTER OF CIRCULAR AREA WITH CONICAL LOADING FUNCTION

The solution for this case may be obtained in two steps. For simplicity, the loading function will be taken as shown in Figure 4a. The solution for this function may then be subtracted from that for a uniform loading (Eq. 3e) to obtain the desired solution for the conical loading (symmetric about the z axis).

Boussinesq (7) gave for the vertical normal stress under a point load Q at the surface of a lineally elastic and isotropic half space,

$$\sigma_z = \frac{3Qz^3}{2(r^2+z^2)^{5/2}}$$

in which r and z are the space coordinates of the point of vertical normal stress σ_z.

In Figure 4a, the differential load dQ is

$$dQ = \frac{\rho}{qR}\,\rho d\beta d\rho$$

and the vertical normal stress under the center is

$$(\sigma_z)_{r=0} = \int_0^{2\pi}\int_0^{R} \frac{\frac{3q}{R}z^3}{2\pi}\,\frac{\rho^2 d\rho d\beta}{(\rho^2+z^2)^{5/2}}$$

$$(\sigma_z)_{r=0} = \frac{3qz^3}{R} \int_0^R \frac{\rho^2 d\rho}{(\rho^2+z^2)^{5/2}}$$

Performing the indicated integration (cf. Eq. 205.05, Dwight, 8),

$$(\sigma_z)_{r=0} = q \left\{ \frac{\left(\frac{R}{r}\right)^2}{\left[\left(\frac{R}{z}\right)^2+1\right]^{3/2}} \right\} \tag{6}$$

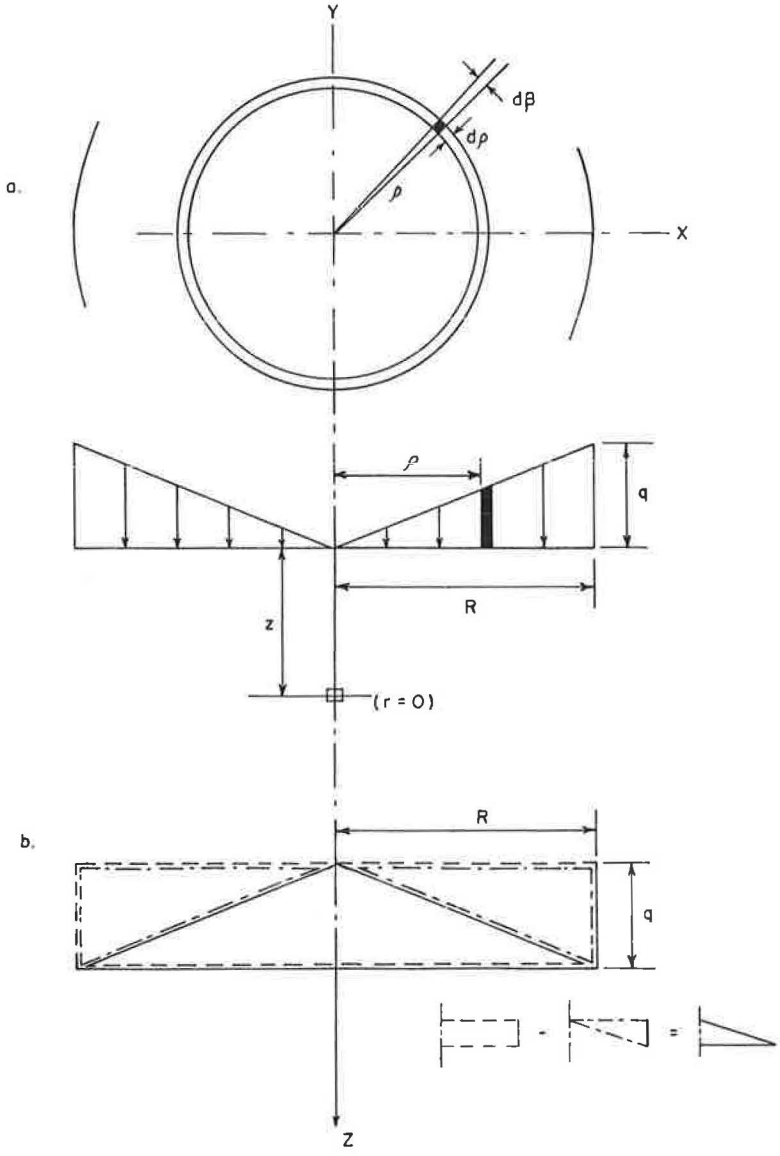

Figure 4. Center stress under conical loading, by parts (flexible and frictionless).

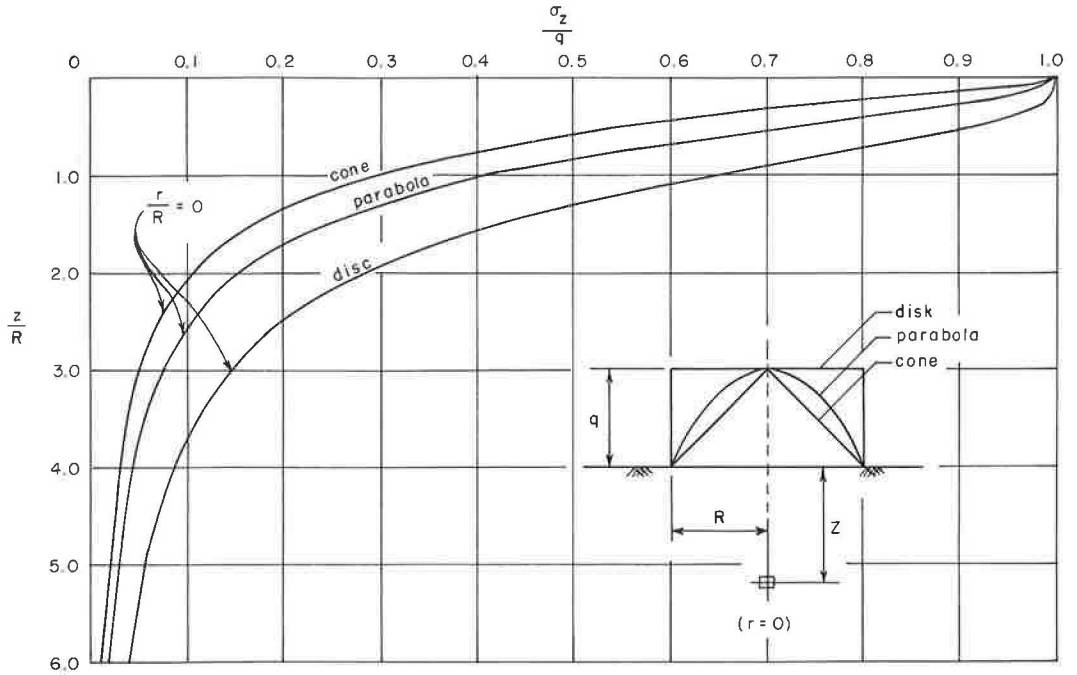

Figure 5. Three loading functions (flexible and frictionless) over a circular area.

As shown in Figure 4b, the desired stress along the z axis for the conical loading may be obtained by subtracting the stress produced by the loading function of Figure 4a from that produced by a uniform load. Or the vertical normal stress under the center of a conical load is the difference in values produced by Eqs. 3e and 6.

$$(\sigma_z)_{r=0} = q\left[\left\{1 - \frac{1}{\left[\left(\frac{R}{z}\right)^2+1\right]^{3/2}}\right\} - \left\{\frac{\left(\frac{R}{z}\right)^2}{\left[\left(\frac{R}{z}\right)^2+1\right]^{3/2}}\right\}\right]$$

$$(\sigma_z)_{r=0} = q\left\{1 - \frac{1}{\left[\left(\frac{R}{z}\right)^2+1\right]^{1/2}}\right\} \tag{6a}$$

Equation 6 a is plotted in Figure 5. Integration for vertical normal stress under conical loading at values of 4/R other than r/R = 0 requires tedious numerical methods, and is not currently available. Therefore, it is pertinent to consider what approximations might be effected in the solution of practical problems involving conical loading functions and vertical stresses at r/R > 0.

APPROXIMATION OF DISTRIBUTION OF VERTICAL STRESSES UNDER CIRCULAR AREA WITH CONICAL LOADING FUNCTION—PRACTICAL PROBLEMS

The two obvious approaches to an approximation of the conical loading function are (a) replacement by a comparable continuous loading function, and (b) replacement by a stepped loading function. Figure 5 uses the former approach and compares the center stresses for a disk, parabola and cone of equal maximum load intensity q. These stresses are everywhere different, except at the surface, and have an order which

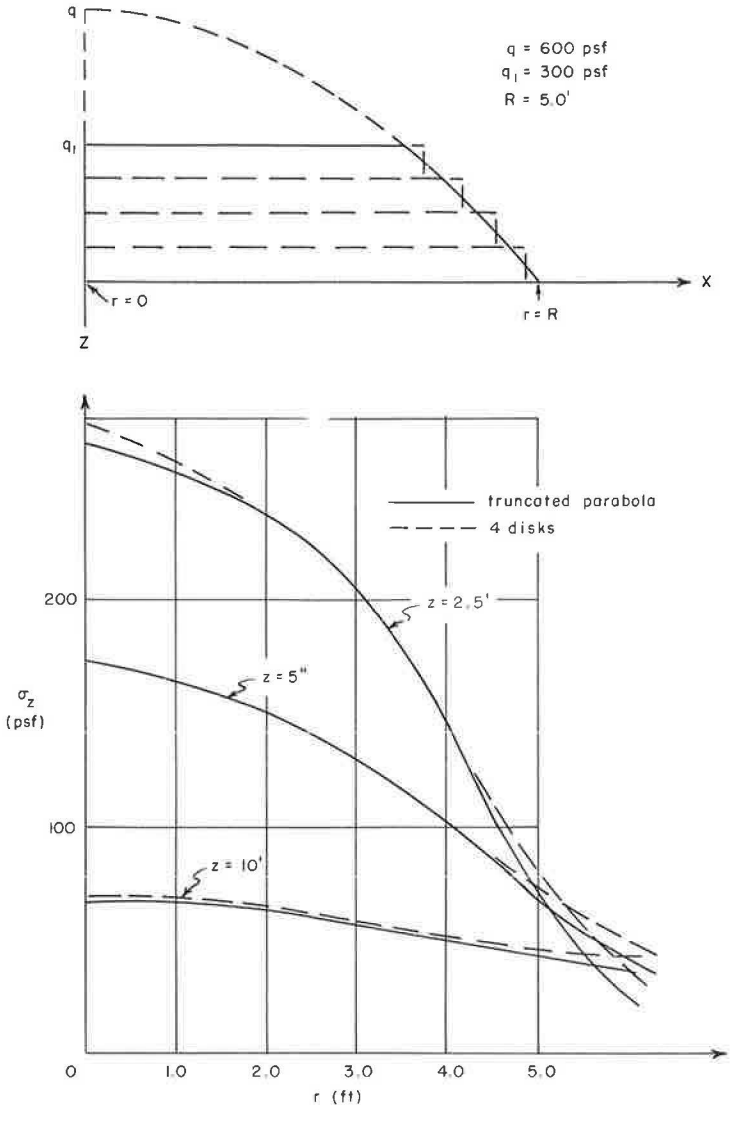

Figure 6. Approximation of parabolic loading function by series of disks.

would be predicted from the nature of the loading function. Along the centerline where vertical normal stresses are the largest, the parabola is seen to be a fair approximation of the cone.

A stepped loading function afforded by a series of thin disks built up in the z direction could presently be compared with the conical loading function only for the centerline stresses. Such an approximation is compared with the parabolic loading function in truncated form[2] at positions of $r \geq 0$ by the example of Figure 6. It is shown that the approximation can be quite good with a reasonable number of steps, particularly over those portions of the loaded soil which have large vertical normal stress. Logically, the conical loading function could also be satisfactorily approximated by a reasonable number of steps. On the basis of relationships shown and inferred, both the parabolic

[2]The truncation is accomplished by passing an XY plane through the figure generated by the loading function at any value $q_i < q$ (Fig. 3).

and the series of disks approximations are conservative (produce higher vertical normal stresses than the conical loadings).

Practicing engineers may be able to cite from their own experiences a number of practical loading situations which have in total or part the approximate shape of a truncated cone. One such example is the soil preload for a tank foundation described by Lambe (9). In this example, the soil preload was approximated by an "equivalent cylinder" or a stack of circular plates in the calculation of certain foundation stresses, including vertical ones. An additional alternative in the solution of vertical normal stresses for such a problem is afforded by a parabolic approximation (Fig. 3), handling the truncation by parts. The centerline stresses for a continuous conical loading function are available in Figure 5, again handling the truncation present in the practical problem by parts.

Another potentially pertinent field loading is the terminal portion of an embankment, such as occurs at a structural abutment. In simplified form, the loading could be envisioned as a halved truncated paraboloid, joined on its vertical face by a long strip of trapesoidal shape. Solution would be by parts.

SUMMARY

A general formulation for the vertical normal stresses produced in a lineally elastic homogeneous and isotropic mass of semi-infinite extent loaded symmetrically with respect to an axis normal to its horizontal surface was presented. The loading element was assumed to be flexible and without friction with respect to the foundation soil. Integrations were performed and data plotted which conveniently permit the determination of vertical normal stress at any point in the mass due to a circular area of uniform loading (Fig. 2), and with a parabolic loading function (Fig. 3). Centerline vertical normal stresses for a conical loading function were developed (Figs. 4 and 5), and the approximation of a conical loading function (either in whole, or truncated) by either a parabolic function or a stepped function of circular disks was discussed. It was suggested that the methods and data presented have practical applicability for foundation soil loadings such as preloads for tanks and "rounded" embankment terminals.

REFERENCES

1. Egorov, K. E., "Concerning the Question of Computing Stresses Under Foundations with Footings in the Shape of Rings." Mekanika Gruntov (Soil Mechanics), 34-57, Grosstroiizdat, Moscow (1958).
2. Terzaghi, Karl, "Theoretical Soil Mechanics." Wiley, New York, 376-382 (1943).
3. Jürgenson, Leo, "The Application of Theories of Elasticity to Foundation Problems." Contribution to Soil Mechanics, 1925-1940, 148-183, Boston Soc. of Civil Engineers (1940).
4. Harr, M. E., "Ground Water and Seepage." McGraw-Hill, 293-296 (1962).
5. McLachlin, N. W., "Bessel Functions for Engineers." 2nd Ed. Clarendon Press, Oxford, England (1955).
6. Watson, G. N., "A Treatise on the Theory of Bessel Functions." 2nd Ed., University Press, Cambridge, England (1952).
7. Boussinesq, J., "Application des Potentiels a l'Etude de l' Equilibre et du Mouvement des Solides Elastiques." Gauthier-Villars, Paris (1885).
8. Dwight, H. B., "Tables of Integrals (Revised Edition)." Macmillan (1947).
9. Lambe, T. W., "Pore Pressures in a Foundation Clay." ASCE. Proc. 88, No. SM2, pt. 1, 19-47 (April 1962).

Discussion

ROBERT L. SCHIFFMAN, Professor of Soil Mechanics, Rensselaer Polytechnic Institute, and Lecturer in Civil Engineering, M.I.T.—This paper presents some very useful and interesting new results in the evaluation of stress and displacement components in an elastic half-space subjected to normal surface tractions.

The general formulation of the axisymmetric problem, in terms of integrals with Bessel kernels goes back to Lamb (10). More recently Sneddon (11) has formalized integral transform techniques to this same end.

If the free surface of an elastic half-space were loaded axisymmetrically, by normal loads only, of distribution [-p(r)], the stress and displacement components at any point (r, z) within the half-space would be

$$u_r(r,z) = \frac{1+\nu}{E}\left[(1-2\nu)N_1^0(r,z) - zN_1^1(r,z)\right] \tag{7a}$$

$$u_z(r,z) = -\frac{1+\nu}{E}\left[(2-\nu)N_0^0(r,z) + zN_0^1(r,z)\right] \tag{7b}$$

$$\sigma_{rr}(r,z) = N_0^1(r,z) - zN_0^2(r,z) - \frac{1-2\nu}{r}N_1^0(r,z) + \frac{z}{r}N_1^1(r,z) \tag{7c}$$

$$\sigma_{\theta\theta}(r,z) = 2\nu N_0^1(r,z) + \frac{1-2\nu}{r}N_1^0(r,z) - \frac{z}{r}N_1^1(r,z) \tag{7d}$$

$$\sigma_{zz}(r,z) = N_0^1(r,z) + zN_0^2(r,z) \tag{7e}$$

$$\sigma_{rz}(r,z) = zN_1^2(r,z) \tag{7f}$$

in which

$$N_q^p(r,z) = \int_0^\infty m^p M(m)\, e^{-mz} J_q(mr)\, dm \tag{7g}$$

and

$$M(m) = -\int_0^a p(r) J_0(mr)\, dr \tag{7h}$$

The sign convention in the preceding formulation follows the theory of elasticity in which tension is positive, and compression is negative.

These formulations hold for all cases within the semi-infinite solid ($z > 0$). If the loading function $p(r)$ is discontinuous, some problems arise in the calculation of the stress and displacement components at the discontinuity. This question has been discussed by Love (12).

The surface settlement w, follows from Eq. 7a:

$$w \equiv u_z(r,0) = -\frac{2(1-\nu^2)}{E} N_0^0(r,0) \tag{8a}$$

in which

$$N_0^0(r,0) = \int_0^\infty M(m) J_0(mr)\, dm \tag{8b}$$

Along the centroidal axis ($r = 0$), the component of shear stress σ_{rz} is zero, and the radial stress component σ_{rr} is equal to the tangential component of stress $\sigma_{\theta\theta}$.

$$\sigma_{rr}(0,z) = \sigma_{\theta\theta}(0,z) = \frac{1}{2}\left[(1+2\nu)N_0^1(0,z) - zN_0^2(0,z)\right] \tag{9a}$$

$$\sigma_{zz}(0,z) = N_0^1(0,z) + zN_0^2(0,z) \tag{9b}$$

in which

$$N_0^p(0,z) = \int_0^\infty m^p M(m) e^{-mz} dm \tag{9c}$$

If the loading function, p(r), is prescribed as a constant p_0, over a circular area of radius a, the formulation will reduce to the well-known Boussinesq relations (13).

The authors have analyzed the vertical stress components σ_{zz} due to a parabolic loading function of the form

$$p(r) = \frac{p_0}{a^2}(a^2 - r^2) \tag{10}$$

Substituting Eq. 10 in Eqs. 7g and 7h results in

$$M(m) = -\frac{2p_0}{m^2} J_2(ma) \tag{11a}$$

and

$$N_q^p(r,z) = -2p_0 \int_0^\infty m^{p-2} e^{-mz} J_2(ma) J_q(mr)\, dm \tag{11b}$$

The integral (Eq. 11b) can be evaluated in terms of an infinite series of hypergeometric functions as shown in this paper (6).

Substituting Eq. 11a into Eq. 8 results in a general expression for the surface settlement w.

$$w = \frac{4(1-\nu^2)p_0}{3E} {}_2F_1\left(\frac{1}{2}, -\frac{3}{2}; 1, \frac{r^2}{a^2}\right) \tag{12}$$

where (${}_2F_1$) is the hypergeometric function, and is defined by the authors in its infinite series form. The surface settlement at the center (r = 0) of the loaded area w_0 is

$$w_0 = \frac{4(1-\nu^2)p_0 a}{3E} \tag{13}$$

The surface settlement at the edge (r = a) of the loaded area w_e is

$$w_e = \frac{16(1-\nu^2)p_0 a}{9\pi E} \tag{14}$$

In their paper, the authors analyze the development of vertical stress components. In settlement analysis, the principal stress components are often of major concern (9). In general, the calculation of the principal stress components requires a knowledge of the four independent components of stress (vertical, radial, shear, and tangential). Along the centroidal axis, however, the shear stress component is zero, and the radial and tangential components of stress are equal. Thus the vertical and radial stress components are the principal stress components.

The two integrals of interest in the computation of the radial stress component are (N_0^1) and (N_0^2). These integrals have the form,

$$N_0^1(0,z) = -2p_0 \int_0^\infty \frac{1}{m} e^{-mz} J_2(ma)\, dm \tag{15a}$$

and

$$N_0^2(0, z) = -2p_0 \int_0^\infty e^{-mz} J_2(ma)\,dm \tag{15b}$$

Evaluation of Eq. 15 and substitution in Eq. 9 results in expressions for both the radial and vertical stress components (6):

$$\sigma_{rr}(0, \zeta) = \sigma_{\theta\theta}(0, \zeta) = -p_0 \left[\frac{1+2\nu}{2} I_1 - \zeta I_2 \right] \tag{16a}$$

$$\sigma_{zz}(0, \zeta) = -p_0 \left[I_1 + 2\zeta I_2 \right] \tag{16b}$$

in which

$$I_1 = \left[(1+\zeta^2)^{1/2} - \zeta \right]^2 \tag{16c}$$

$$I_2 = \left[(1+\zeta^2)^{1/2} - \zeta \right]^2 (1+\zeta^2)^{-1/2} \tag{16d}$$

and

$$\zeta = z/a \tag{16e}$$

The numerical values for the radial and vertical stress components can be obtained from the same set of depth dependent formulas. The profile of the radial stress component along the centroidal axis is shown in Figure 7.

The conical loading can theoretically be treated in the manner just described. This method, however, will lead to certain computational difficulties. The integrals N_q^p cannot, in general, be evaluated in closed form. The function M(m) will be an infinite series of Bessel functions (6). Subsequently, the function N_q^p will be an infinite series of infinite integrals with the series summed over the order of the Bessel kernel.

In the special case, where the stress and displacement components are desired only along the centroidal axis (r = 0), a direct integration of the point load solution, as used by the authors is desirable (13). By this method the surface settlement w_0 at the center of a conical loading whose maximum load p_0 is at r = 0 is

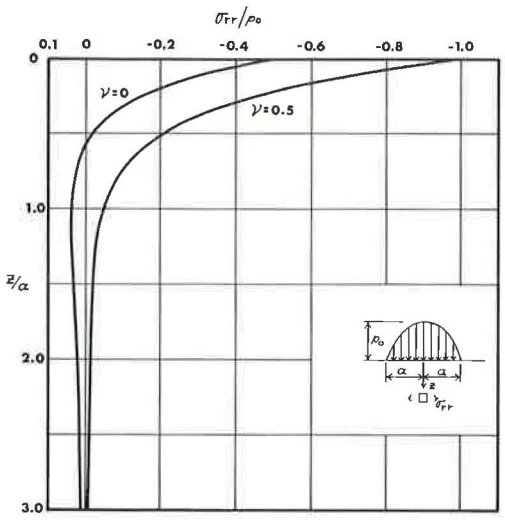

Figure 7. Radial stress component along centroidal axis (parabolic loading).

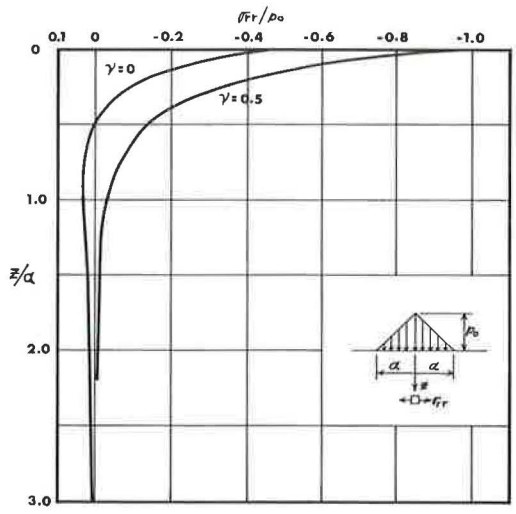

Figure 8. Radial stress component along centroidal axis (conical loading).

$$w_0 = \frac{(1-\nu^2)p_0 a}{E} \tag{17}$$

The radial stress component along the centroidal axis of the described conical loading has the expression

$$\sigma_{rr}(0, \zeta) = \sigma_{\theta\theta}(0, \zeta) = -\frac{p_0}{2}\left[(1 + 2\nu) + I_3 - 2(1 + \nu)I_4\right] \tag{18a}$$

in which

$$I_3 = \zeta(1 + \zeta^2)^{-1/2} \tag{18b}$$

$$I_4 = \zeta \log_e\left[\frac{1 + (1 + \zeta^2)^{1/2}}{\zeta}\right] \tag{18c}$$

Figure 8 shows the profile of the radial stress component beneath the center of the loaded area.

REFERENCES

10. Lamb, H., "On Boussinesq's Problem." Proc., London Math. Society, 34:276-284 (1902).
11. Sneddon, I. N., "Fourier Transforms." McGraw-Hill (1951).
12. Love, A. E. H., "The Stress Produced in a Semi-Infinite Solid by Pressure on Part of the Boundary." Phil. Trans., Roy. Soc., London, (A), 228, 377-420 (1929).
13. Timoshenko, S., and Goodier, J. N., "Theory of Elasticity." 2nd Ed., McGraw-Hill (1951).