HIGHWAY RESEARCH RECORD

Number 164

Night Visibility

5 Reports

Subject Classification

51	Highway Safety
52	Road User Characteristics

HIGHWAY RESEARCH BOARD
DIVISION OF ENGINEERING NATIONAL RESEARCH COUNCIL
NATIONAL ACADEMY OF SCIENCES—NATIONAL ACADEMY OF ENGINEERING

Washington, D.C., 1967
Publication 1442

Department of Traffic and Operations

Harold L. Michael, Chairman
Associate Director, Joint Highway Research Project,
Purdue University Lafayette, Indiana

HIGHWAY RESEARCH BOARD STAFF

E.A. Mueller, Engineer of Traffic and Operations

COMMITTEE ON NIGHT VISIBILITY

(As of December 31, 1965)

Matthew C. Sielski, Chairman
Director, Traffic Engineering and Safety Department
American Automobile Association, Washington, D.C.

Earl Allgaier, Secretary
Manager, Driver Education Division, Traffic Engineering and Safety Department,
American Automobile Association, Washington, D.C.

Merrill J. Allen, Professor of Optometry, Indiana University, Bloomington
Terrence M. Allen, Department of Psychology and Highway Traffic Safety Center, Michigan State University, East Lansing
Herbert H. Bartel, Jr., Civil Engineering Department, Southern Methodist University, Dallas, Texas
F. C. Breckenridge, Washington, D.C.
Joseph A. Ciccolella, Director of Engineering for Signal Products, Elastic Stop Nut Corporation of America, Elizabeth, New Jersey
Paul L. Connolly, Bloomfield Hills, Michigan
C. L. Crouch, Technical Director, Illuminating Engineering Society, New York, N.Y.
L. Bertram Curtis, Electrical Engineer, Pennsylvania Department of Highways, Harrisburg
Richard G. Domey, Assistant Professor of Administration, and Chairman of Administrative Sciences Curriculum, Florida Atlantic University, Boca Raton
Warren H. Edman, Vice President for Roadway Lighting, Holophane Company, Newark, Ohio
B. I. Fansler, Electrical Engineer, Lighting & Traffic Control Branch, U.S. Bureau of Public Roads, Washington, D.C.
D. M. Finch, Institute of Transportation and Traffic Engineering, University of California, Berkeley
Theodore W. Forbes, Department of Psychology and Engineering Research, Michigan State University, East Lansing
H. W. Hofstetter, Division of Optometry, Indiana University, Bloomington
Jo Ann Kinney, Head, Vision Branch, Medical Research Laboratory, U.S. Naval Submarine Medical Center, U.S. Naval Submarine Base, Groton, Connecticut
Charles Marsh, Electrical Engineering Department, Pennsylvania State University, University Park
Ross A. McFarland, Harvard School of Public Health, Boston, Massachusetts
Ellis E. Paul, Consulting Engineer, New York, N.Y.
R.H. Peckham, Vice President, The Eye Research Foundation of Bethesda, and Director, Biophysics Section, Bethesda, Maryland
Charles H. Rex, Roadway Lighting Design Engineer, Outdoor Lighting Department, General Electric Company, Hendersonville, North Carolina

Oscar W. Richards, American Optical Company, Research Center, Southbridge, Massachusetts
Val J. Roper, Manager, Product Planning and Application, Miniature Lamp Department, General Electric Company, Nela Park, Cleveland, Ohio
Richard N. Schwab, Electrical Engineer, U.S. Bureau of Public Roads, Washington, D.C.
Thomas J. Seburn, Associate Director, Bureau of Highway Traffic, Yale University, New Haven, Connecticut
W. F. Sherman, Manager, Engineering and Technical Department, Automobile Manufacturers Association, Inc., Detroit, Michigan
K. A. Stonex, Automotive Safety Engineer, Technical Liaison Section, Engineering Staff, General Motors Corporation, GM Technical Center, Warren, Michigan
A. L. Straub, Department of Civil Engineering, Clarkson College of Technology, Potsdam, N. Y.
Ray P. Teele, Photometry and Colorimetry Section, National Bureau of Standards Washington, D.C.
D. A. Toenjes, Lamp Division, General Electric Company, Nela Park, Cleveland, Ohio
Ross G. Wilcox, Executive Secretary, Safe Winter Driving League, Chicago, Illinois
R. M. Williston, Chief of Traffic, Connecticut State Highway Department, Wethersfield
Ernst Wolf, Retina Foundation, Boston, Massachusetts
Henry Woltman, Supervisor, Government Technical Service, Reflective Products Division, 3M Company, St. Paul, Minnesota

Foreword

Vision is the most significant of the sensory perceptions and in traffic operations the most critical. The action taken by the driver is dependent on the visual aspects of the road ahead, and under nighttime conditions vision takes on an even more fundamental role.

For many years the Night Visibility Committee of the Highway Research Board has been urgently concerned about vision at night as it affects road operations. The five reports presented in this RECORD represent the committee's contribution to this important subject for the past year.

The information presented will be of prime interest to those researchers who are concerned with aspects of seeing at night. Practicing highway and traffic engineers will find the materials on sign positioning and ability to see as aging progresses to be of immediate use. Those concerned with vehicle headlighting aspects will find two reports. Much of the work will be of interest to those interested in highway safety.

Wolf's significant paper on seeing under aging conditions indicates that in supplying adequate information for the aging population, their reduced visual sensitivity should be taken into consideration. Woif's research supports the assumption that the reduction in peripheral visual sensitivity in the aged is due to reduced retinal metabolism. Above 65, peripheral vision sensitivity is especially reduced.

Hanson and Palmquist have researched aspects of detecting vehicles with only one lighted headlamp (and better discerning its position) by use of reflectorized materials applied on the unlighted headlamp. The research study evaluated the effectiveness of the reflectorized headlamp under realistic night driving conditions. Variables studied included dry and simulated rain conditions, three rates of closure and both sides of the vehicle. Observers were able to detect positioning of the single-headlamp vehicle (with unlit headlamp reflectorized) substantially before an ordinary one-lamp vehicle. Position detection was poorer for those vehicles having the right headlamp unlit.

Cheeseman and Voss, in studying headlight usage on a wide-median rural Interstate highway, found that two-thirds of all motorists were relying on low headlight beams in driving under fairly low traffic volumes. Substantial traffic volume increases resulted in only a 5 percent increase in low headlight beam use. Two-thirds of those traveling with high headlight beams did not lower the beams on sighting an oncoming vehicle.

Once again Dr. Oscar Richards has made a significant review of the outstanding literature in the field. His 1965 literature review is the eleventh of this nature and some 103 entries are incorporated in his report. These reviews offer an opportunity to survey the new achievements in the entire spectrum of night vision and are a unique feature of the committee's work.

Forbes and his associates have experimented in the study of the variables of sign position and brightness in relation to the ease of seeing signs under simulated highway conditions. Using simulated "interstate green" backgrounds of varying intensities, reaction to these different sign background intensities under nighttime and daytime simulated conditions were categorized and explained.

Publication of this RECORD was made possible in part by a financial grant from the ENO Foundation for Highway Traffic Control, Inc. and grateful acknowledgment is hereby extended for their contribution.

Contents

Studies on the Shrinkage of the Visual Field With Age

ERNST WOLF, Retina Foundation and Massachusetts Eye and Ear Infirmary, Boston, Massachusetts

The loss of visual sensitivity with age is accounted for by physical changes occurring at about age 35-45 years and consists in reduced power of accommodation of the lens and greater sensitivity to scotomatic glare. At age 60 a considerable decrease in the capacity to adapt to darkness and to perceive intermittent stimuli occurs. Also at this age a measurable shrinkage of the visual field is observed. It is thought that these later changes are associated with changes of retinal metabolism.

By means of perimetric and tachistoscopic field tests carried out on a large number of individuals ranging in age from 15 to 91 years, it was possible to measure changes in peripheral sensitivity and to recognize the nature of the changes. A shrinkage of several degrees in each decade above age 45 years was observed with a greater shrinkage above age 65.

The loss in the extent of peripheral vision appears similar to that produced by reduction of oxygen tension of the breathing air. It was possible to show that by reducing the percentage of oxygen for young observers, their sensitivity could be lowered to the same degree as that attained in the normal process of aging in the 66-75 year old. Such results support the assumption that the changes in peripheral visual sensitivity in the aged are due to reduced retinal metabolism. It is pointed out that for night vision and road safety of the aging population, reduced sensitivity should be taken into consideration by supplying adequate information within their range of visual perception.

•AFTER AGE 35-40 years the range of accommodation becomes gradually smaller and glasses become a necessity in order to see minute details (1). Recently, it has been shown that sensitivity to glare increases rapidly after age 40 and begins to affect the ability to make visual discrimination (2, 3). The ability to adapt to darkness (4, 5) and the perception of intermittent stimuli of light also increase with age (6, 7, 8), and an acceleration of functional loss is observed beyond 60 years.

All these changes in visual capacity are functions of the natural process of aging. The first two represent physical changes in the elasticity and clarity of the tissues of the lens, the latter occurring considerably later and coinciding with changes in metabolic activity of the human organism.

In clinical work and basic studies on vision it is a practice to determine the extent of the visual field by means of perimetry (9). Such tests indicate that under identical conditions of testing, younger individuals show a larger visual field than older people. In view of the functional losses mentioned above, it seemed of interest to study more extensively the shrinkage of the visual field in relation to age, and correlate these findings with the other changes in visual function mentioned previously.

Paper sponsored by Committee on Night Visibility and presented at the 45th Annual Meeting.

For peripheral field tests a Goldmann projection perimeter was used (10). Targets of various sizes and luminances were projected against the inner surface of a hemispherical shell and moved from the periphery toward the center of the visual field along radii 15 deg apart. The observer, while keeping fixation at the center of the hemisphere, signaled when he first saw the target appearing in his field of vision. By approaching successively the center from all directions, the limits of perceptibility were determined and yielded a graphic picture of the extent of the visual field.

The size of the visual field depends upon (a) size, (b) luminance, (c) color of target, and (d) the contrast between target and background. For this study the luminance of the light spot (3.3 millilamberts) and the luminance of the background (0.02 millilambert) were held constant while targets of 1 mm^2 and 2 mm^2 were presented.

The tests were carried out in the Retina Service Laboratory at the Massachusetts Eye and Ear Infirmary. The individuals tested were students, hospital employees, individuals escorting patients to the hospital, groups made available through the Veterans Administration and coming from state and federal offices, insurance companies, etc. Also, retired personnel from these offices served as observers. The field tests reported here represent only a small part of a more extensive study of various visual functions in these individuals.

The mean angular distance at which the targets became perceptible on 24 radii of the visual field 15 deg apart was plotted for 7 age ranges: 16-25, 26-35, 36-45, 46-55, 56-65, 66-75, and the range above 75 years. Despite individual variations in field size, the means of each age range show a gradual shrinkage of field size with age. The loss of peripheral vision up to age 55 is only slight, whereas in subsequent decades a more pronounced shrinkage occurs (Fig. 1).

For a more extensive study of field shrinkage with age a tachistoscopic test was developed which permitted study of sensitivity changes in the near periphery. An observer is positioned with the aid of a head and chin rest so that the eye tested is 1 m from and at the same level with the red fixation light at the center of a translucent tangent screen. The preferred eye is tested while the other is occluded (Fig. 2).

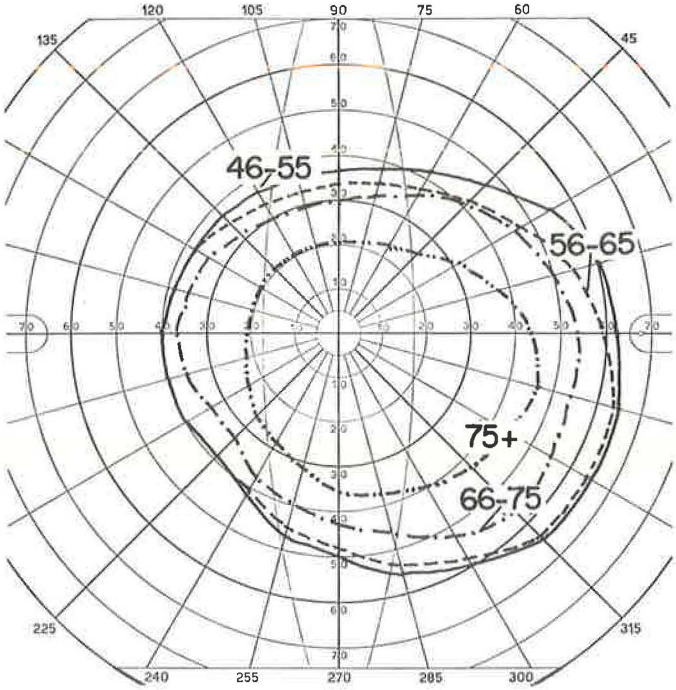

Figure 1. Perimetric fields of the right eye taken with a 1-mm target on individuals in age ranges of 46-55, 56-65, 66-75, and 75 years and over.

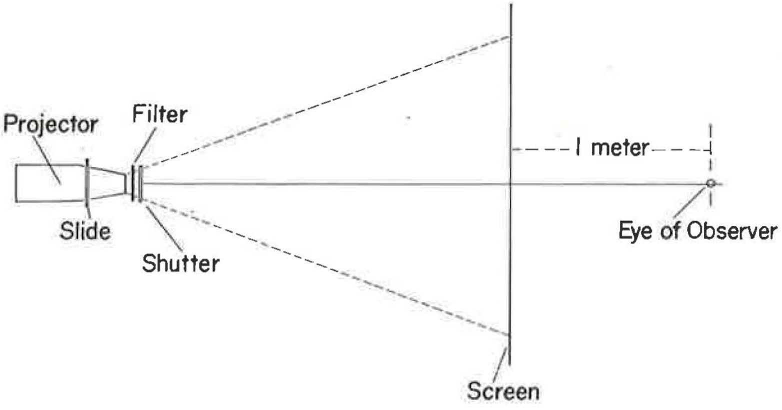

Figure 2. Diagram of apparatus for tachistoscopic field tests.

The test consists in recognition of a series of light spots situated on circles 10, 20, and 30 deg from the fixation point and projected on the screen by means of slides. The light spots subtend ½, 1, and 2 deg visual angle. They are arranged so that they form the configuration of squares or diamonds on the 10, 20, and 30-deg circles as shown in Figure 3. Each slide is presented by means of a compur shutter for 0.04 sec. Behind the shutter neutral density filters are inserted which permit variation of luminance of the light spots in half log unit steps. The luminances are presented in Table 1.

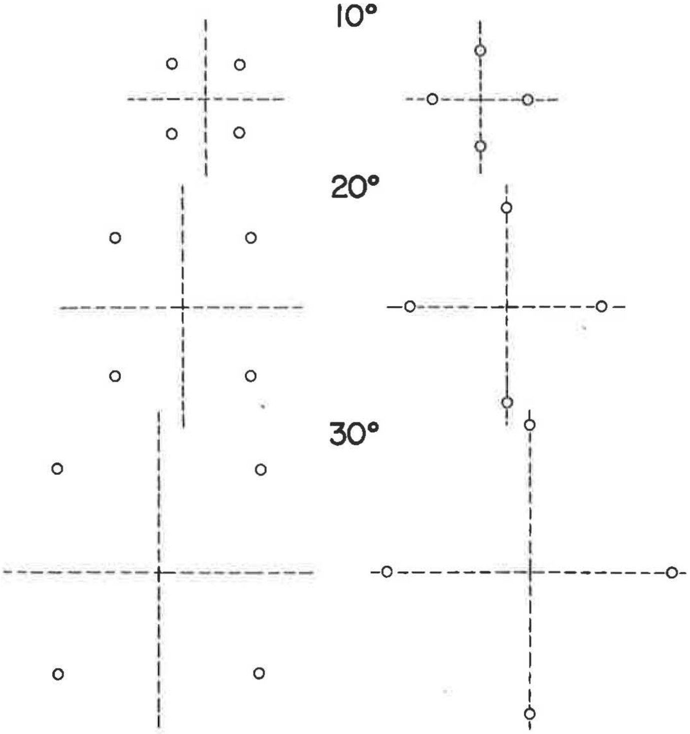

Figure 3. Arrangement of dots projected on screen 10, 20, and 30 deg from fixation.

TABLE 1

LUMINANCE OF LIGHT SPOTS

Luminance	Log Luminance
0.0023	$\bar{3}.36$
0.0091	$\bar{3}.95$
0.024	$\bar{2}.38$
0.08	$\bar{2}.90$
0.28	$\bar{1}.45$
0.9	$\bar{1}.95$
2.7	0.47
11.1	1.05
32.5	1.51

The observer is shown the 6 slides with the largest dots (arranged in alternating squares and diamonds 10, 20, and 30 deg around fixation) and is told he will be shown similar slides with smaller dots and at lower luminances. The projection screen is illuminated by ambient light of 0.1 millilambert. This presents a level of illumination to which all observers were able to adapt in 3 min for the visual discrimination to be made. Each slide was projected twice in succession and the observer was asked to report which spots he saw.

Altogether more than 250 individuals between 15 and 91 years of age were tested—30 in each decade. The results are presented in Figure 4, which shows the mean number of dots seen per individual in each age range, disregarding luminance and dot size, on the horizontal, vertical, and oblique meridians of the visual field. All curves have similar shapes. The number of dots seen in the upper visual field on the 45, 90, and 135-deg radii is considerably smaller than the number of dots seen in the lower visual field on the 225, 270, and 315-deg radii. It is interesting to note that lower sensitivity is found on the vertical meridian above fixation and highest sensitivity on the lower temporal oblique.

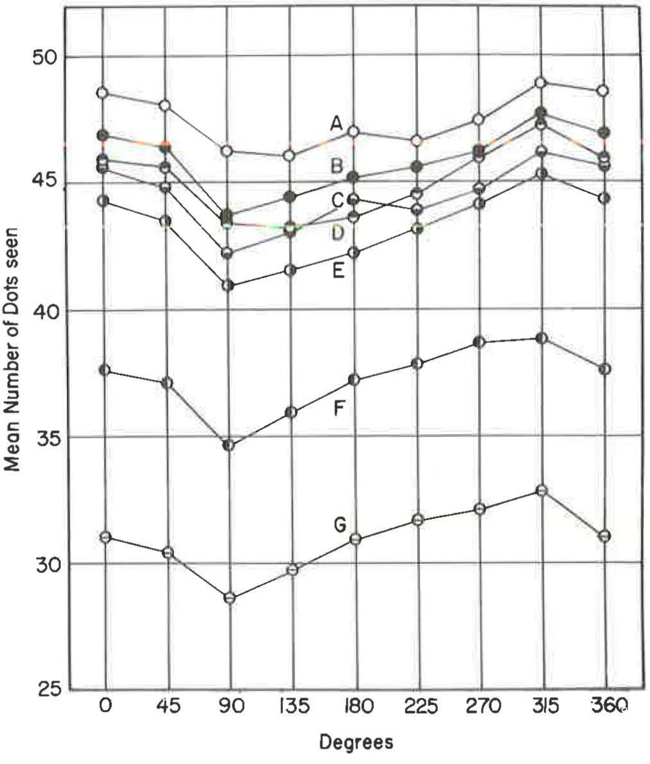

Figure 4. Mean number of dots seen on 8 radii of the visual field by individuals of seven age ranges. A: 16-25, B: 26-35, C: 36-45, D: 46-55, E: 56-65, F: 66-75, and G: 75 years and above.

The curves from the youngest to the oldest group have successively lower positions when plotted according to mean number of dots seen (Fig. 4). The highest position is held by the youngest individuals (A). The curves for the decades from 25-54 years take a lower position but lie closer together and cross each other, indicating only small changes in sensitivity (B, C, D). The curve for the 55-64 year range drops slightly, indicating the first decline in peripheral sensitivity (E). The 65-74 year old group shows a sharp decline in the number of dots seen and an equally great step downward is found for the group of individuals above 75 years of age.

Figure 5 shows the mean number of dots seen per individual in a 30-deg field where dot size was ½, 1, and 2 deg, but disregarding luminance and direction from center at mean ages of 20, 30, 40, 50, 60, 70, and 80+ years. The three curves are almost identical in shape. As dot size becomes larger proportionally, more dots are perceived at each age level. As age advances the number of dots seen decreases only slightly to mean age 60 years, after which much faster decrease is seen.

Pronounced changes in sensitivity observed in dark adaptation, flicker, and perimetric field tests occur after the age of 60 years. At this age, changes in the retina are noticed which are associated with changes in retinal metabolism. McFarland (11) recently suggested that there is a strong correlation between aging and oxygen deprivation and that the best correlations are shown for changes in visual sensitivity under reduced O_2 pressure and/or age. Dark adaptation thresholds were elevated 100 percent when O_2 tension was reduced from 20 to 12 percent. Further decrease to 9 percent O_2 tension yielded a threshold elevation of approximately 200 percent.

It was felt that the shrinkage of the visual field with age offered an opportunity to test the correlation between O_2 need and age by carrying out ordinary perimetric and

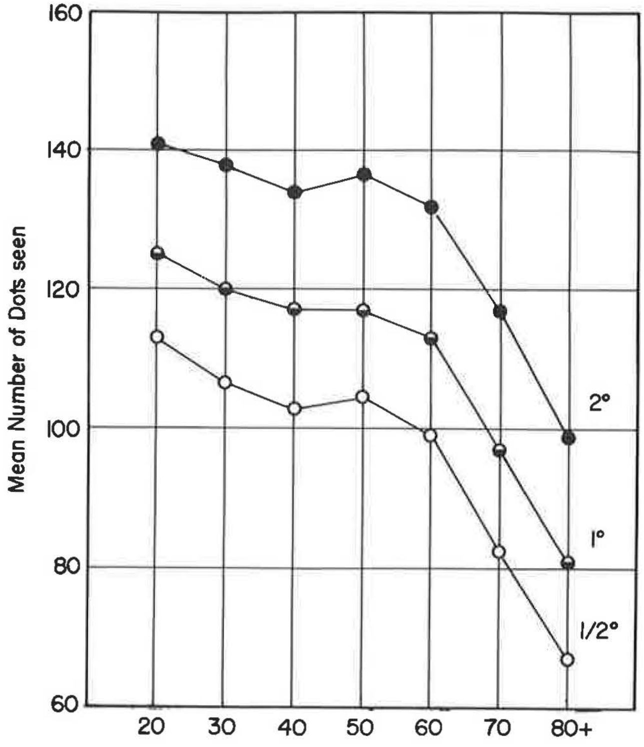

Figure 5. Mean number of dots of 0.5, 1, and 2-degree angular subtense seen at mean ages 20 to 80 years and above.

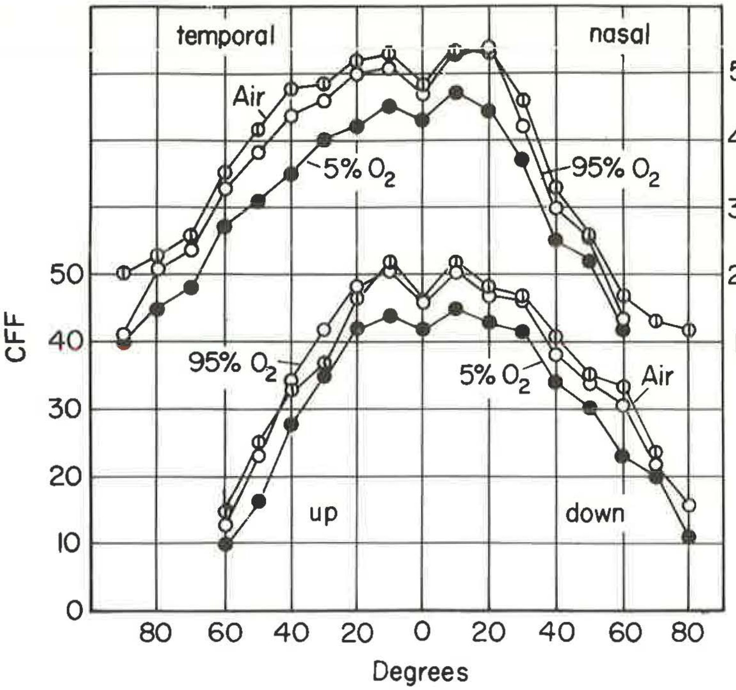

Figure 6. Critical flicker frequencies obtained on horizontal meridian of visual field when breathing air, 95 percent oxygen, and 5 percent oxygen.

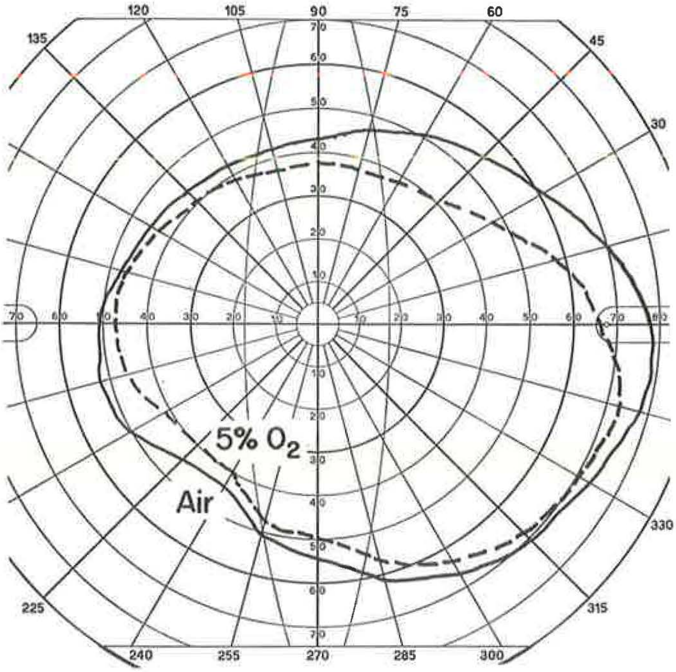

Figure 7. Perimetric field of right eye when breathing air and when breathing gas mixture containing only 5 percent oxygen.

tachistoscopic field tests in trained observers when the respiratory air contained only 5 percent O_2.

When studying flicker responses at various age levels, trained observers were tested along the horizontal and vertical meridians of the visual field. Critical flicker frequency (CFF) profiles are shown in Figure 6. When reducing the O_2 tension of the respiratory air to 5 percent, CFF drops about 3-4 cps for each point tested, and the CFF profiles lie consistently lower under O_2 deprivation. When, instead of air, pure oxygen is inhaled during the tests, a normal flicker profile is obtained, indicating that O_2 tension above 20 percent does not enhance CFF.

In standard perimetric tests individuals of all ages show a shrinkage of the visual field when the respiratory gas mixture contains only 5 percent O_2. The shrinkage of the field is general, but appears greater in the upper visual field than in other regions (Fig. 7). In the tachistoscopic tests the percentage recognition of target spots drops in young individuals about 10. 4 percent, whereas in individuals above 60 years of age the drop is approximately 15. 5 percent. These findings may be considered as additional evidence for the assumption that reduction in function of the peripheral retina is due to a reduction in metabolic rate.

The data presented here are concerned with near threshold levels of luminance. In night driving considerably higher luminance levels prevail, and since visibility is a function of luminance, a proportional field shrinkage may be assumed. The tachistoscopic tests concern a visual field extending only 30 deg from center, yet show clearly a shrinkage of a field this size. Older people may need 10 times more light than persons in the 26-35 year range in order to perceive a target at equal distance and direction from the central retina. Reduction in the O_2 tension of the respiratory air of a 25-year-old produces a vision loss equalling that of a 66-75 year old arrived at by the normal process of aging.

Visual performance under low levels of illumination and particularly in night driving depends to a large extent on the information gathered by the peripheral retina. To make this information readily available for the large contingent of motorists of advanced age, it would seem necessary and advantageous to take into consideration all pertinent factors, e.g., size, luminance, contrast, presentation time, etc., when visual information for safe vehicular travel is presented.

REFERENCES

1. Hirsch, M. G., and Wick, R. E. Vision in the Aging Patient. Optometric Symposium. Chilton Co., Philadelphia, 1960.
2. Wolf, E. Glare and Age. AMA Arch. Ophthalmol., Vol. 64, p. 502, 1960.
3. Wolf, E., and Gardiner, J. S. Study on the Scatter of Light in the Dioptric Media of the Eye as a Basis of Visual Glare. AMA Arch. Ophthalmol. (in press).
4. McFarland, R. A., and Fisher, M.D. Alterations in Dark Adaptation as a Function of Age. Jour. Gerontol., Vol. 10, p. 424, 1955.
5. Domey, R. G., and McFarland, R. A. Dark Adaptation Threshold. HRB Bull. 298, p. 3, 1961.
6. McFarland, R. A., Warren, A. B., and Karis, C. Alterations in Critical Flicker Frequency as a Function of Age and Light-Dark Ratio. Jour. Exp. Psychol., Vol. 56, p. 529, 1958.
7. Copinger, N. W. Relationship Between Critical Flicker Frequency and Chronological Age for Varying Levels of Stimulus Brightness. Jour. Gerontol., Vol. 10, p. 48, 1955.
8. Wolf, E., and Schraffa, A. M. Relationship Between Critical Flicker Frequency and Age in Flicker Perimetry. AMA Arch. Ophthalmol., Vol. 72, p. 832, 1964.
9. Harrington, D. O. The Visual Fields: A Textbook and Atlas of Clinical Perimetry. C. V. Mosby Co., St. Louis, 1956.
10. Goldmann, H. Grundlagen exater Perimetrie. Ophthalmologica, Vol. 109, p. 57, 1945.
11. McFarland, R. A. Experimental Evidence of the Relationship Between Aging and Oxygen Want: In Search of a Theory of Aging. Ergonomics, Vol. 6, p. 339, 1963.

Effectiveness of Reflectorized Headlamps

DOUGLAS R. HANSON and PHILIP V. PALMQUIST
3M Company, St. Paul, Minnesota

One factor which contributes to the well-established hazards associated with night driving is the problem of encountering vehicles with only one lighted headlamp. Attempts to alleviate problems of this type have included compulsory and voluntary vehicle inspection. However, the 1964 National Vehicle Safety Check of passenger cars found front headlights to be the second most prevalent defect.

Recent investigation into the problem of "one-eyed" vehicles has led to the proposed use of reflex-reflective materials included within a headlamp to act as a safety device. Should headlamp failure occur, reflected light would permit early discrimination of the unlit lamp position, thus affording positive vehicle delineation. A headlamp of this type has been developed which provides 6.9 candlepower per incident footcandle per unit at 0.2 degrees divergence and 0 degrees incidence, somewhat higher than the minimum value of 4.5 candlepower per footcandle value specified for Class A red reflex-reflectors by the Society of Automotive Engineers for identical conditions.

This paper reports the findings of a research study designed to evaluate the effectiveness of the reflectorized headlamp under realistic night driving conditions. The established parameter was the distance at which the unlit side of an approaching one-eyed car could be detected for vehicles equipped with reflectorized headlamps and for vehicles equipped with conventional headlamps. Variables considered were dry and simulated rain conditions, three rates of closure, and both sides of the vehicle.

Mean detection distances established were 472 ft and 288 ft for the reflectorized and conventional headlamp conditions respectively; the difference in means was highly significant. As expected, all detection distances during conditions of simulated rain were reduced, but relative values were maintained. Comparison of detection distances obtained for reflectorized headlamps to motorist perception-reaction distance established a significant improvement in time available for evasive action.

•ACCORDING TO published reports of the National Safety Council (1), the rate of motor vehicle fatalities during hours of darkness is 3 times as great as for daylight hours. It is well established that substantially reduced driver visibility, fatigue, and effects of alcohol are primary factors for this increased accident rate. Surveys in 3 states have shown that poor visibility is a causal factor in one-third of all night traffic accidents (2) and is an indirect, but certain, factor in a high proportion of the balance.

A hazard related to night visibility which has been recognized by both industry and safety officials is the meeting of an oncoming "one-eyed" car. Statistics of accidents

---

Paper sponsored by Committee on Night Visibility and presented at the 45th Annual Meeting.

related to this condition are not readily available; however, figures reported by the National Safety Council (1) indicate that improper lights were a contributing factor in approximately 36,900 accidents which occurred in 1964. Attempts to alleviate such problems have included compulsory as well as voluntary vehicle inspection in a number of states and cities, yet in 1964, following the voluntary national safety check of passenger vehicles, defective front lights were found to be the second most prevalent defect. A survey (3) of 2,800 cars operating on low beam found 1.64 percent with only one lighted headlamp. If this percentage exists nationally, there could be at any one given time 1.4 million automobiles constituting a hazard to the motoring public. Although long recognized as a hazard, the incidence of vehicles with only one lighted headlamp continues despite progressive efforts by enforcement agencies, safety officials, and others.

Recent investigation of the one-eyed car problem by a lamp manufacturer has led to the proposed use of reflex-reflective materials included within a headlamp to act as a safety device. Thus, if the headlamp were to fail, reflected light would permit earlier determination of the position of the one-eyed car. A reflectorized headlamp has been developed and this report presents the results of its effectiveness.

LAMP DESIGN

The reflectorized headlamp employs a specially designed reflex-reflective filament shield replacing the conventional shield of a low-beam lamp. Neither the position of the shield nor its design significantly change light output or distribution but provide effective reflex-reflection of the unlighted headlamp. The materials used in the reflectorized filament shield withstand the high operating temperatures in the vicinity of the tungsten filament without clouding the headlamp or shortening filament life. Although only the shield is reflex-reflective, reflection is obtained from the entire headlamp because of the parabolic shape of the reflector, as shown in Figure 1.

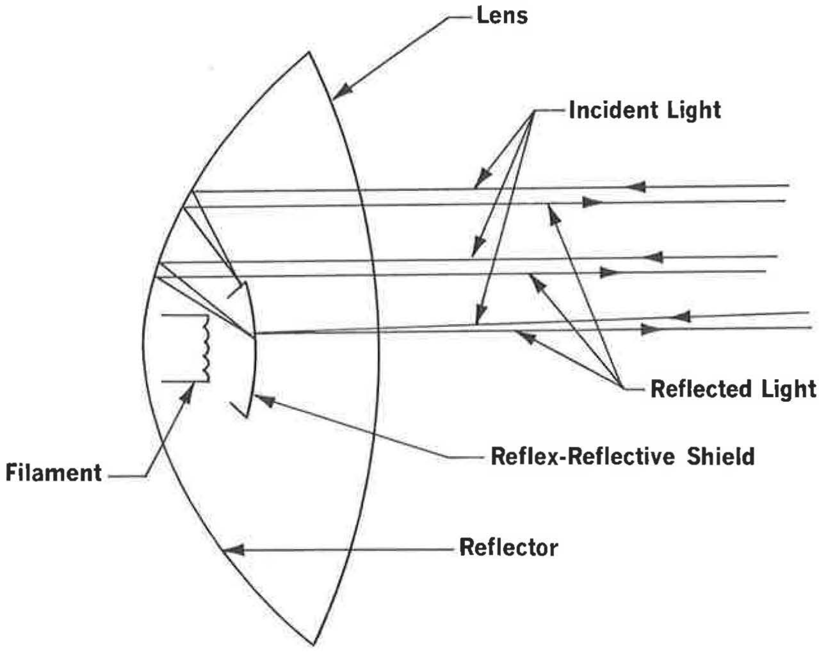

TOP VIEW

Figure 1. Schematic of reflectorized headlamp.

Using the procedures of Elstad, Fitzpatrick, and Woltman (4) and divergence angle tables by Johnson (5), it is possible to calculate the luminous intensity of the reflectorized headlamps used in this study. Figure 2 shows specific intensity in candlepower per incident footcandle per lamp as a function of divergence angle for the reflectorized headlamp, measured in accordance with photometric procedures established by the Society of Automotive Engineers (6). Distances used in the calculations are shown in Figure 3. At a distance of 472 ft, the mean detection distance for the reflectorized side of an approaching one-eyed vehicle, and an illuminance of 0.0043 footcandles, the luminous intensity of the reflectorized headlamp is 0.027 candlepower. This approximates the luminous intensity of a reflectorized headlamp which has burned out due to normal failure. Even higher luminous intensity is possible with further lamp modification.

The values of the reflectorized headlamp exceed the minimum requirements for Class A red reflex-reflectors as specified by the Society of Automotive Engineers (6). The SAE value at 0.2 deg observation angle and 0 deg entrance angle is 4.5 cp per ftc. The reflectorized headlamp value at the same observation and entrance angle is 6.9 cp per ftc (Fig. 2).

EVALUATION STUDY

The basic objective in evaluating the effectiveness of the reflectorized headlamp as a safety device was to determine if the distance at which the unlit side of an approaching one-eyed vehicle could be detected was greater for a car equipped with reflectorized

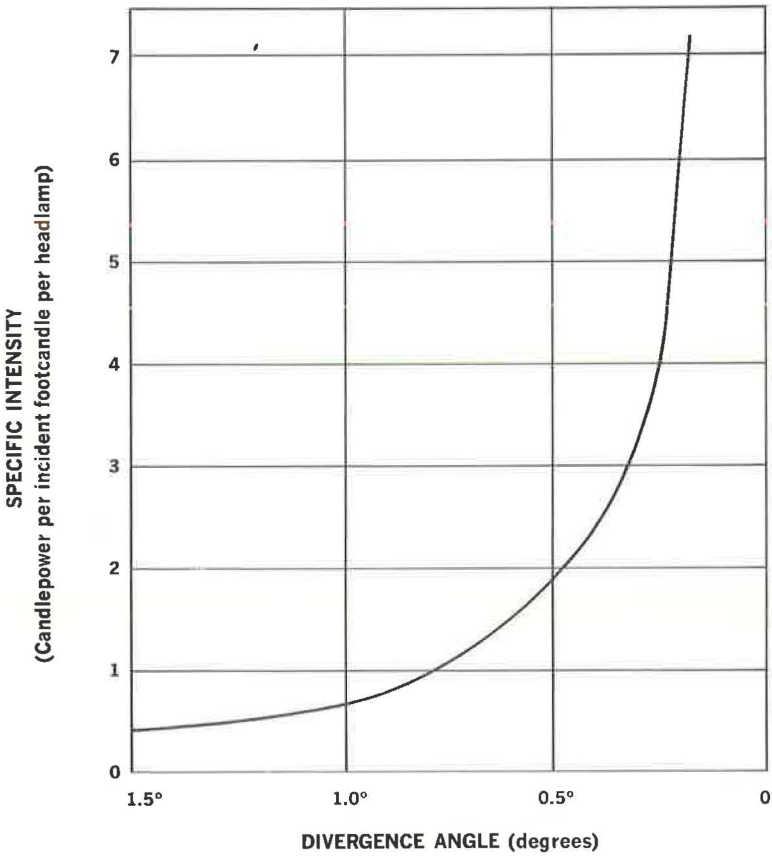

Figure 2. Specific intensity of a reflectorized headlamp as a function of divergence.

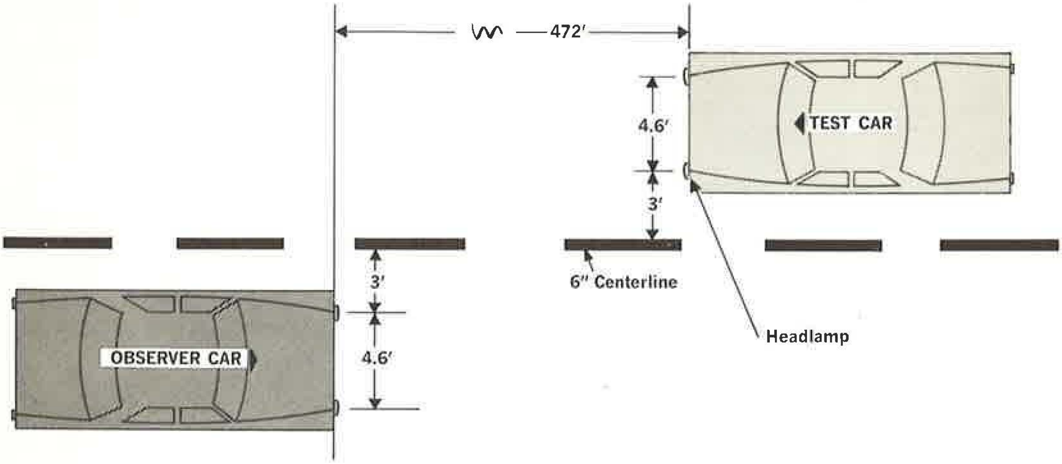

Figure 3. Study car positions used for headlamp luminous intensity calculations.

headlamps than for a car equipped with conventional headlamps. The test procedures were developed from experience gained in a preliminary evaluation of vehicles equipped with conventional and reflectorized headlamps under realistic night driving conditions.

The study was conducted on an inactive section of straight, level airport taxiway which closely approximated a rural paved roadway. A standard 6-in. centerline was installed to provide proper vehicle orientation. Two 1962 automobiles of identical make and model were used as test cars. One was conventional in every respect, the other had both low-beam headlamps replaced with the previously described reflectorized headlamps. The test cars were converted to one-eyed cars by disconnecting either low-beam headlamp.

Observers, each equipped with a stopwatch, were seated in a stationary car positioned as shown in Figure 3. Headlamps of the observer car were on low beam, as this is the condition prevalent when encountering vehicles at night, and engine rpm was maintained at a high level to assure normal headlamp output. Headlamps of all cars used in the study were clean and properly aligned. One-eyed test cars were driven one at a time toward the observers at a specified constant rate of speed starting at a distance of approximately ¾ mile. (At this distance only the lighted headlamp could be seen.) As the one-eyed car approached, observers scanned the immediate vicinity left and right of the oncoming lighted headlamp. When the observer detected the unlit side of the approaching car he started his stopwatch; when the approaching car was abreast of the observer, he stopped the watch and recorded the elapsed time. The test car then rejoined the other test car at the starting point. With this procedure, observers had no knowledge as to which car would approach next.

Observations during dry, clear, nighttime conditions were made of both test cars with left headlamp unlit, right headlamp unlit, and at indicated closure speeds of 30 mph, 45 mph, and 60 mph. In all cases speeds, unlit lamp position, and test car sequence were randomized to provide statistical validity. The study was partially replicated to obtain an estimate of experimental error variance.

In addition to the dry, clear, nighttime observations, a duplicate series of observations was made under simulated rain conditions. Numerous attempts to observe were made during actual rain conditions; however, rain duration was insufficient to obtain valid data, so a study was conducted under simulated rain conditions. This was accomplished by positioning a scaffold tower to the rear and slightly to the right of the observer car as shown in Figure 4. At the top of the tower a water nozzle created a rainfall rate of approximately 1¼ in. per hour uniformly over a 30-ft diameter circle. With the observer car in simulated rain, windshield wipers were required and some headlamp light diffusion occurred. Each of the test conditions described was viewed by 15 observers.

Figure 4. Apparatus used to create simulated rain condition.

RESULTS AND ANALYSIS

The indicated rates of closure (Table 1) maintained by the test car drivers were corrected to actual rates by calibrating the speedometers of the 2 test cars. Using actual closure rates, elapsed times recorded by observers were converted to detection distances. The procedure used to detect significant differences between levels of each variable, and also to establish if significant interaction existed between variables, was the analysis of variance (7) which considered the following:

Variable	Level
Headlamp type	Reflectorized—conventional
Rate of closure	30 mph—45 mph—60 mph
Unlit headlamp position	Left side—right side
Weather conditions	Dry—simulated rain

Where significant interaction between variables was found the method of least significant difference (LSD) as described by Duncan (7) was employed to quantify the interaction. This test, based on the "t" distribution, is used to determine if significant differences exist between means at combinations of the levels of variables. If the dif-

TABLE 1

MEAN DISTANCE AT WHICH UNLIT SIDE OF APPROACHING ONE-EYED VEHICLE WAS DETECTED

Indicated Rate of Closure	Simulated Wet Condition				Dry Condition			
	Conventional Headlamp		Reflectorized Headlamp		Conventional Headlamp		Reflectorized Headlamp	
	Left Side	Right Side	Left Side	Right Side	Left Side	Right Side	Left Side	Right Side
30 mph	331	147	442	387	411	267	582	555
45 mph	302	173	363	372	395	248	568	551
60 mph	332	171	357	433	420	262	547	507

NOTE: Left or right side refers to the side of the test vehicle in relation to its driver.

TABLE 2

ANALYSIS OF VARIANCE FOR LISTED VARIABLES

Variable	Mean Square	"F" Ratio Calculated	"F" Ratio Allowable[a] at 99.9%	Conclusion
Headlamp type (reflectorized or conventional)	3043306.8	479.61	10.83	Significant
Rate of closure	10842.3	1.71	6.91	Not Significant
Unlit lamp position	598714.7	94.35	10.83	Significant
Weather condition	1411057.3	222.38	10.83	Significant
Headlamp type—rate of closure	10472.4	1.65	7.20	Not Significant
Headlamp type—unlit lamp position	472831.1	74.52	11.20	Significant
Headlamp type—weather condition	104148.5	16.41	11.20	Significant
Residual	6345.39			

[a] "F" Ratio allowable from Duncan (7).

ference between means exceeds the LSD this difference is judged to be significant; otherwise, no such conclusion can be reached.

The analysis of variance for the variables listed above is shown in Table 2. The hypothesis tested was that means at the different levels or combinations of levels were equal; the significance level for rejection was set at 99.9 percent.

The analysis of variance established that a significant difference existed in all comparisons with the exception of rate of closure, which had no effect. The overall mean detection distances established by the study for conventional and reflectorized headlamp conditions were respectively 288 feet and 472 feet, an improvement of 62 percent. This difference is highly significant, as shown in Table 2, "Headlamp type (reflectorized or conventional)."

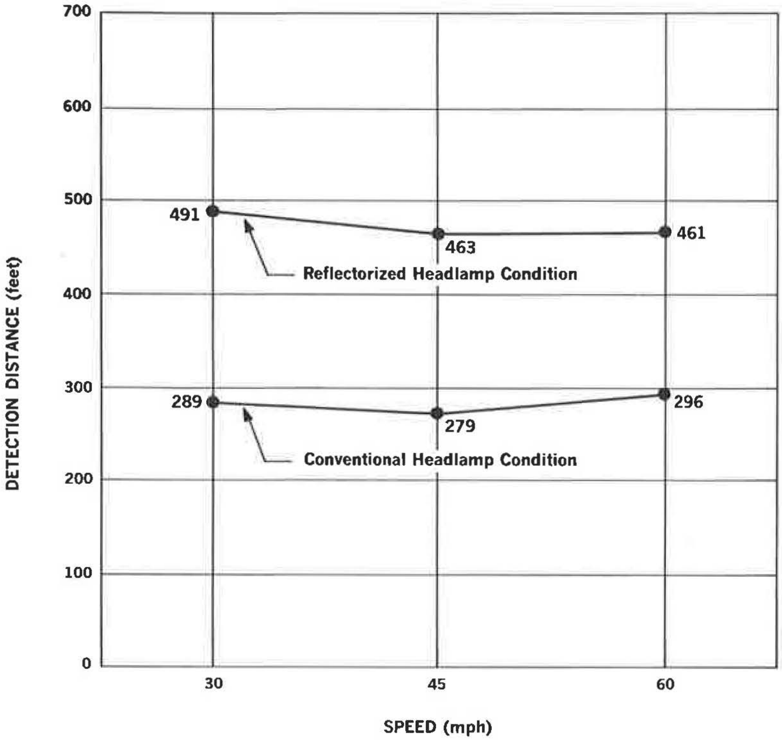

Figure 5. Mean detection distance for reflectorized and conventional headlamp condition at 3 rates of closure.

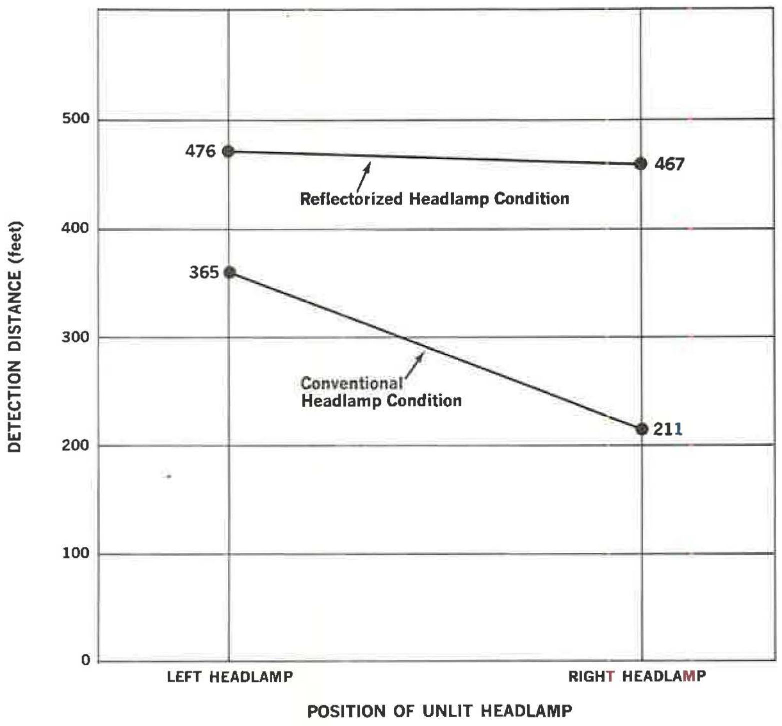

Figure 6. Mean detection distance for reflectorized and conventional headlamp condition by position of unlit headlamp (left or right refers to the test car in relation to its driver).

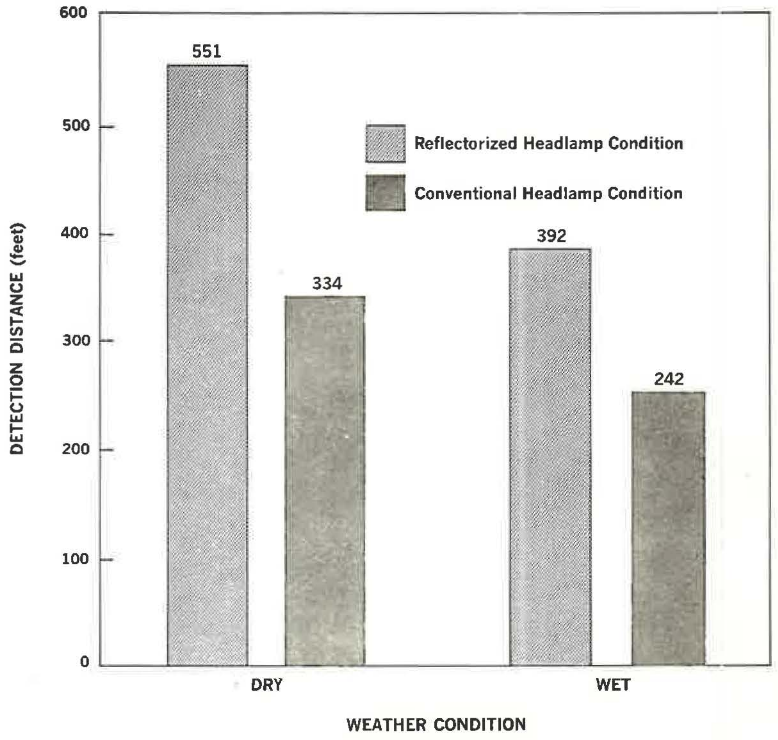

Figure 7. Mean detection distance for reflectorized and conventional headlamp condition during dry weather and simulated rain.

In determining detection distance, rate of closure was found to be insignificant. This is apparent in Figure 5, which shows mean detection distances for 3 rates of closure. Differences between means of the 2 headlamp conditions were significant at any given speed; however, the mean detection distance by type of headlamp was found to be equal for all speeds.

Figure 6 illustrates the mean detection distances by headlamp condition and unlit lamp position. The "F" ratio establishes a significant 2-factor interaction as indicated on the graph by the nonparallel slopes. These combinations were further evaluated by the method of least significant differences. The LSD at the 99.9 percent level is 39 ft. Applying this value to the means shown establishes that, with the reflectorized headlamp condition, mean detection distances were not significantly different for either side of the car. For the conventional headlamp condition there is, however, a significant difference between the left and right side.

Figure 7 shows the detection distance means for the 2 weather conditions. The LSD value of 39 ft establishes that detection distances for the reflectorized headlamp condition were significantly greater under both dry and simulated wet conditions. As expected, detection distances were reduced for the simulated rain condition.

Table 1 summarizes the mean detection distances for reflectorized and conventional headlamp conditions by speed, weather condition, and unlit headlamp position. In all direct comparisons of mean detection distances the reflectorized headlamp condition has a greater absolute value than the conventional headlamp condition.

DISCUSSION

A problem and acknowledged risk of night driving occurs when meeting a one-eyed motor vehicle. Its relative position is uncertain and hazard exists, particularly on

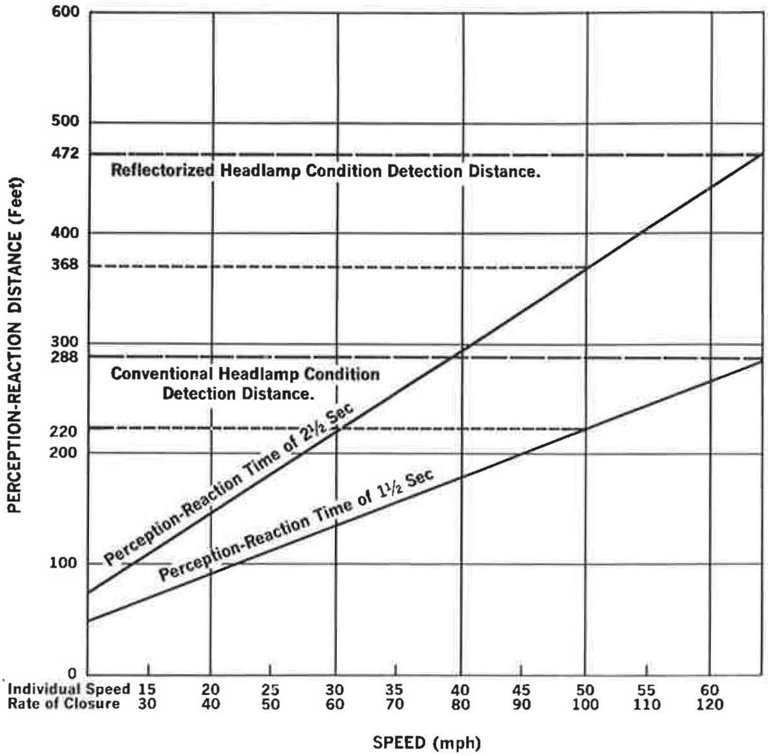

Figure 8. Distance required for perception and reaction by rate of closure for 2 time periods—perception-reaction of $1\frac{1}{2}$ sec from Stalder and Lauer (9); perception-reaction of $2\frac{1}{2}$ sec from AASHO (10).

2-lane roads where relative clearance is unknown until the last moment of closure. The distance required for a motorist to react when a hazardous situation impends is dependent upon rate of closure and the time required for the motorist's response. Response, as described by Matson, Smith and Hurd (8), is the psychological process of perception, intellection, emotion and volition. Rate of closure is strictly a function of relative speed; however, response can vary substantially when modified by the many factors of fatigue, alcohol, weather, disabilities, desires, skills, and attitudes, and greatly by the complexity of the confronting situation.

Because recognition and discrimination of relative motion is required at the lower thresholds of visibility, it is important to employ an allowance for time based on studies of perception of relative motion at such illumination levels. Stalder and Lauer's research of this type (9) reports mean perception time to be 1½ sec for reflectorized target forms at relative closure speeds in excess of 30 mph. Other values may pertain; based on the evaluation of numerous studies, AASHO (10) suggests 2½ sec for combined perception and brake reaction time for use in determining total braking distance.

Figure 8 shows rate of closure vs perception-reaction distance for both Stalder and Lauer's minimum 1½-sec value and AASHO's suggested 2½-sec value. A rate of closure of 100 mph, a typical nighttime condition legal in many jurisdictions, requires a minimum of 220 ft before evasive action can be initiated should a hazardous situation appear. Using the AASHO time requirement of 2½ sec, the distance consumed would increase to 368 ft. The study has shown that the mean detection distance for the unlit conventional headlamp condition is 288 ft. Should danger impend, a motorist could not, on the average, maneuver to a safe condition in the time required by AASHO and would have only 68 ft, or just under ½ sec, to maneuver using the Stalder and Lauer figure. The mean detection distance for the reflectorized headlamp condition of 472 ft provides an average of from 104 to 252 ft within which evasive action could be taken, depending on the perception-reaction time used.

This study utilized ideal conditions of roadway alignment, clean, properly aimed headlamps and driver awareness, so distances reported may be optimum. Actual road conditions where dirt, misalignment of roadway or headlamps, as well as the condition of the driver or vehicle, will reduce detection distances. Thus, consideration should be given to the reflectorization of headlamps to provide some margin of safety.

REFERENCES

1. Accident Facts. National Safety Council, Chicago, 1965.
2. Larimer, E. M. Visibility of Reflectorized License Plates. HRB Bull. 163, p. 27, 1957.
3. Hanson, D. R. Incidence of Automobiles at Night With Only One Headlamp Lighted. Minnesota Mining and Manufacturing Co., Tech. Serv. Rept., 1965.
4. Elstad, J. O., Fitzpatrick, J. T., and Woltman, H. L. Requisite Luminance Characteristics of Reflective Signs. HRB Bull. 336, p. 51, 1962.
5. Johnson, M. D. Motor Vehicle Headlamp Evaluation—Calculation of Divergence Angles for Various Sign Positions. Minnesota Mining and Manufacturing Co., Tech. Serv. Rept. 310.1, 1961.
6. Lighting Equipment and Photometric Tests. Society of Automotive Engineers, New York, 1964.
7. Duncan, A. J. Quality Control and Industrial Statistics. Richard D. Irwin, Inc., Homewood, Ill., 1959.
8. Matson, T. M., Smith, W. S., and Hurd, F. W. Traffic Engineering. McGraw-Hill Book Company, New York, 1955.
9. Stalder, H. I., and Lauer, A. R. Effect of Pattern Distribution on Perception of Relative Motion in Low Levels of Illumination. HRB Bull. 56, p. 25, 1952.
10. A Policy on Geometric Design of Rural Highways. AASHO, Washington, 1954.

Motor Vehicle Headlight Beam Usage on a Section of Interstate Highway 90

MAX R. CHEESEMAN and WILLIAM T. VOSS, South Dakota Department of Highways

•THE MOTOR vehicle headlight beam usage study was initiated in February 1963 to obtain accurate data on the use of motor vehicle headlight beams on the Interstate System. Field work started August 18, 1963, in conjunction with the Interstate System Accident Study No. 2 and ended October 5, 1963. The study was carried out by the Research and Planning Division, South Dakota Department of Highways, in cooperation with the U. S. Bureau of Public Roads.

STUDY PROCEDURE

The study section is located on an 18-mi section of I90 near Rapid City, South Dakota, in Pennington and Meade Counties. Seventeen miles of the study section have a 46-ft grassy depressed median, while the remaining 1-mi sector has the same type median, but varying from approximately 50 to 200 ft in width. The 4 concrete driving lanes have 10-ft-wide bituminous right shoulders and 6-ft bituminous left shoulders. There were no trees, shrubbery, or highway lighting that would affect headlight usage. The posted nighttime maximum speed limit was 60 mph for all vehicles.

The data were obtained by the drivers of a patrol car, driving a complete circuit around the study section. There were 5 different drivers working during the study, each proficient in his ability to determine the difference between a high beam and a low beam on approaching vehicles. The patrol drivers recorded headlight beam data for 28 six-hour periods beginning at 9 p. m. and ending at 3 a. m. The original data were recorded on a set of 4 hand counters imbedded in a piece of styrofoam plastic 6 x 8 x 2 in. thick which rested on the seat beside the driver. The data were permanently recorded on a form provided for that purpose at the finish of each round trip.

The patrol vehicle, driven in the outside lane at speeds varying between 50 and 55 mph, was operated with its headlights on high beam when no vehicles were in sight and its headlights lowered when an approaching vehicle came into view. Only oncoming vehicles were considered.

The average daily traffic on the study section during the survey operations was 4,600 vehicles.

ANALYSIS

All oncoming motor vehicle headlight beams were initially classified as high beam or low beam when first sighted. The second classification was taken at the moment of relative coincidence, or when one motor vehicle met another motor vehicle on the highway. Table 1(a) shows the total number of vehicles classified, a breakdown of headlight beam use when first sighted and the moment of relative coincidence.

A total of 8,322 motor vehicles were classified during the 28 six-hour periods. Of the 2,786 vehicles that were on high beam when first sighted by the patrol operator, 1,052 vehicles or 38 percent lowered their headlights for the patrol car. The 62 percent of the motorists who did not lower their lights were operating in violation of South Dakota motor vehicle law.

Paper sponsored by Committee on Night Visibility and presented at the 45th Annual Meeting.

TABLE 1

SUMMARY OF HEADLIGHT OBSERVATIONS FOR ALL STUDY PERIODS

Position	Vehicles on Low Beam		Vehicles on High Beam		Total Vehicles Observed	
	No.	Percent	No.	Percent	No.	Percent
(a) 9:00 p.m. to 3:00 a.m.						
Approaching (first sighted)	5,536	67	2,786	33	8,322	100
Moment of relative coincidence	6,478	78	1,844	22	8,322	100
(b) 9:00 p.m. to Midnight						
Approaching (first sighted)	3,963	68	1,874	32	5,837	100
Moment of relative coincidence	4,580	78	1,257	22	5,837	100
(c) Midnight to 3:00 a.m.						
Approaching (first sighted)	1,573	63	912	37	2,485	100
Moment of relative coincidence	1,898	76	587	24	2,485	100

Of the 5,536 vehicles that were on low beam when first sighted by the patrol operator, 110 changed to high beam. The reason for this action, accounting for 2 percent of the total, is not known but is presumed to be the result of driver error.

Table 1 indicates that a high proportion of the motorists driving the Interstate during the nighttime hours were using their low beams. Part of this low-beam usage may be due to the traffic volume. To check this possibility and also to provide a basis for other comparisons, the data were further broken down into two groups—those vehicles observed before midnight (higher volumes of traffic) and those vehicles observed after midnight (lower volumes of traffic).

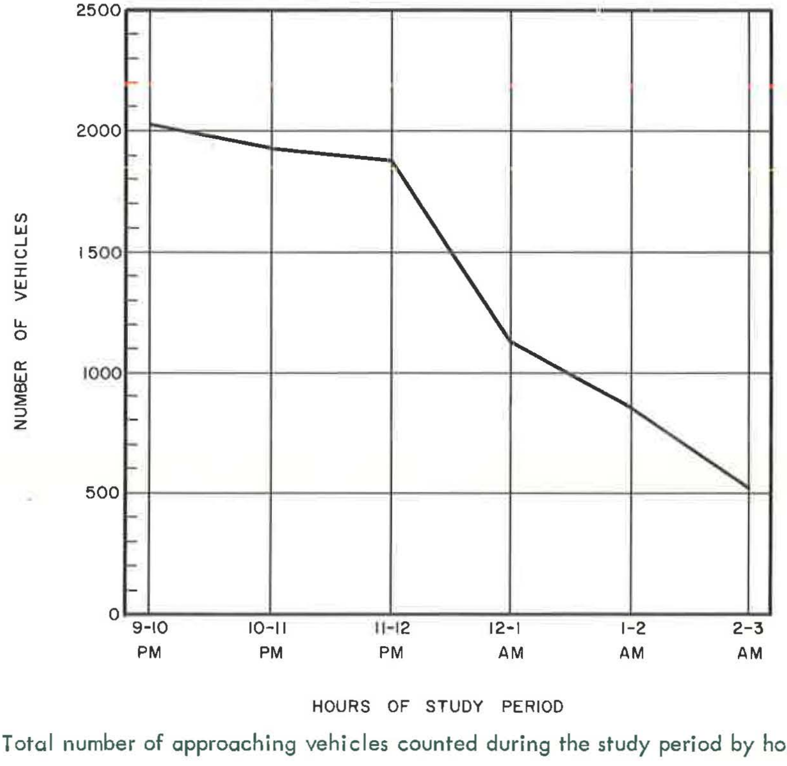

Figure 1. Total number of approaching vehicles counted during the study period by hour of study.

Figure 1 shows the continuous downward trend in approaching traffic volume from the beginning of the study period at 9 p. m. until the finish at 3 a. m. The trend for the 3 hours before midnight shows a very slight decline in volume, followed by a sharp decline between midnight and 1 a. m. and then a continuing downward trend of less severity.

From Tables 1(b) and 1(c) it can be seen that 5, 837 headlight observations were made in the 3-hr period before midnight compared with 2, 485 observations in the 3-hr period after midnight. Thus oncoming traffic was over 2. 3 times heavier in the earlier study period.

Table 1(b), the higher traffic volume period, shows that 68 percent of the motorists were driving on low beam when first observed compared with 63 percent during the lower traffic volume period as shown in Table 1(c). In other words, 5 percent fewer motorists were driving on low beam during the period of low traffic volume.

The analysis performed on data of significance between the percentage of vehicles on low beam when first sighted before midnight (68 percent) and the percentage of vehicles on low beam when first sighted after midnight (63 percent) was not considered valid because the data from the two periods were not felt to be of the same universe.

The small variation in the proportion of motorists driving on low beam relative to the traffic volume differential, however, would suggest that other factors (other than the volume of vehicles traveling in the same direction) are influencing the drivers' decisions as to headlight usage. The reasons for the extensive use of low beams when traveling on the Interstate are not known. Some factors which could be affecting the driver are:

1. Reflecting surface of the concrete pavement in the driving lanes.
2. Wide shoulders of contrasting bituminous surfacing material which sharply define the traveled way.
3. Large directional signs of reflectorized material.
4. Reflectorized delineators along the shoulder edges.

These factors could possibly be creating enough driver confidence to allow a majority of the vehicle operators to drive on low beam most of the time. It is thought, however, that the reflectorized delineators mentioned might be influencing the driver

TABLE 2

EFFECT OF WEATHER CONDITIONS ON VEHICLE HEADLIGHT BEAM USE

Weather Conditions[a]	Low Beam		High Beam		Total
	Number	Percent	Number	Percent	
(a) Beam When First Sighted					
	(1)	(2)	(3)	(4)	(5)
Clear	4,071	66	2,079	34	6,150
Cloudy	905	67	438	33	1,343
Precipitation	560	68	269	32	829
(b) Beam at Moment of Relative Coincidence					
Clear	4,753	77	1,397	23	6,150
Cloudy	1,059	79	284	21	1,343
Precipitation	666	80	163	20	829

[a] Based on weather conditions at the beginning of each round trip.

to use low beams due to excessive glare resulting from the use of high beams. This could be verified only by further research.

As shown in Tables 1(b) and 1(c), there is little variation between the percentages of vehicles on low beam at the moment of relative coincidence with the patrol vehicle during the higher (78 percent) and lower (76 percent) periods of traffic volume. It was interesting to note, however, that before midnight, 56 vehicles (1 percent) changed from low beam to high beam when meeting the patrol vehicle and after midnight, 54 vehicles (3 percent) of the total first observed on low beam made this same maneuver. The higher incidence of driver error after midnight might be explained by increased driver fatigue during this period.

Table 2 shows the effect various weather conditions have on headlight beam usage. Column 2 indicates a slight upward trend in the use of low headlight beams as weather conditions vary from clear skies to periods of precipitation. This tends to substantiate the opinion that vehicle operators lower their headlight beams during periods of precipitation in order to reduce headlight beam glare.

SUGGESTIONS FOR FUTURE STUDY

Additional research on the following subjects would be beneficial in future studies:

1. The effect, if any, that the period of time the approaching vehicle's lights can be seen by the observer has on headlight beam use.
2. The difference in headlight beam use by the various vehicle types.
3. The effect on oncoming traffic of another vehicle's headlight beams in the vicinity of the patrol car.
4. More precise determination of the effects of various weather conditions on headlight beam use.
5. The effect of reflectorized delineators on headlight beam use.
6. The effect of various traffic volumes on headlight beam use on the Interstate System.

SUMMARY

It was found that 67 percent of all motorists traveling the Interstate Study Section were using their low beams when first sighted. A traffic volume increase of 2.3 times showed only a 5 percent increase in low beam use. This variation is not large enough to explain fully the high usage of low beams on the Interstate in terms of the volume of vehicles traveling in the same direction.

Sixty-six percent of all motor vehicles who were on high beam when first sighted did not lower their headlights for the patrol vehicle. About 2 percent of all vehicles on low beam when first sighted changed to high beam at the moment of relative coincidence. This unusual act was probably caused by driver error due to fatigue.

A slight upward trend was indicated in the use of low headlight beams as weather conditions varied from clear skies to periods of precipitation.

Vision at Levels of Night Road Illumination

XI. Literature 1965

OSCAR W. RICHARDS, Chief Biologist, American Optical Co.,
Southbridge, Massachusetts

•TWO BOOKS (42, 91), a set of tables (47), and several reviews (18, 82, 97) have been added to the general literature on vision since the previous review (76). Attention is called to available abstract services on vision (28), a British book (37), and one on human factors (63). Byrnes' earlier discussion on the vision requirements for motoring has been summarized (25). Vision research should be coordinated with the program suggested by the Road User Characteristics Committee (48) and Rashevsky's mathematical analyses of the driving problem (74).

Bonvallet et al. (22) report on visibility distances on a street from various luminaires, Oppenlander and Wright (67) discuss intersection illumination, and Roper and Meese (81) indicate that, provided lamps were properly aligned, an increased visibility distance could result from increased beam candlepower with only slight handicap from glare. Allen (1) found, by means of a questionnaire, a 39 percent reduction of accidents when vehicle lights are used in daytime driving. Background reflectorization of signs (73) appears to be less useful than it is with license plates (83). Other investigations on the legibility of license plates are also discussed (83). Allen's data are republished (4).

A curious paper (27) states that a driver travels 73 ft "... totally glare-blinded on passing an oncoming pair of headlights on high beam." Fortunately, other more realistic information is available. Fisher and Christie (39) report that the n of the Holiday-Stiles equation for glare was found to be independent of the distribution of luminance and age, but k may be related to both. Considerable variation was found between individuals; one 23-year-old had the equivalent sensitivity of old persons. A summary of observations using opposing headlight beams by Schwab (86) gives new information and discusses needed future work. Schober (85) discusses the paradoxical increase in sensitivity with small angles of a glare source, glare effects on drivers, and Hartsmann's measurements of fatigue. Kinney and Connors (55) provide measurements at levels found on the highway, and Stevens and Diamond (103) report that the apparent brightness of a target increases as the log of the glare angle.

Flashes and flicker illumination are examined (49) and for successful search and detection (101) a flashing point source needs to be from 0.13 to 0.935 kmc. The rate of stimulation by flashes of light depends on target size as well as the rate and amount of light (23). Masking effects are of interest and may occasionally be important on the highway (90). Repetitive sound stimuli can drive the rate of flicker of a light (88). A photochromic windshield that darkens with increased light is reported (7). The abstract also indicates that the darkening reduces glare from headlights. Any darkening response to opposing headlights would be dangerous for night driving.

"A person can learn the knack of seeing moving objects and picking out the important things happening ahead" (9). The how and what of this would be a useful research. Visual illusions of movement involving also the static sense explain some airplane accidents (99). These should also be considered on the road even though the accelerations are less. Movement in a part of one visual field can obliterate that in the other eye (44) which may explain some of the discrepancies between dynamic and static visual acuity.

Paper sponsored by Committee on Night Visibility and presented at the 45th Annual Meeting.

Roadside clues are important (40) and their decrease at night contributes to the "knack" mentioned above. Dynamic and static visual acuities of 30 pilots were similar (57). Increased lead-in time improved dynamic visual acuity in experiments by Miller and Reeder (64) and head eye-movement learning was found to be important in dynamic visual acuity.

Some information that may aid in training programs on seeing is implicit in Potsaid's analysis of search with X-ray pictures (72) and Saugstad and Lie (84) report that flash methods improve peripheral visual acuity.

Benitte (20) summarizes some of the conditions of vision at night, Sim (89) discusses mesopic vision and Johansson and Rumar (52) investigated silhouette seeing on roadways. Contrast threshold information is summarized by Davies (35) and its bearing on detection is discussed. Field trials gave threshold curves about 0. 75 log unit contrast greater than laboratory measurements. Probable levels of contrast for direct and silhouette seeing have been calculated by Turner (94) and are discussed with relation to road lighting.

Binocular is 1. 418 ±0. 021SE times better than monocular vision (26). Allen (3) points out unnecessary hazards to the driver's vision that should be avoided by automobile manufacturers. Mintz (65) reports a 12 percent return from 10^5 forms sent out in the American Optometric Association's vision survey. Gordon (41) provides an analysis of the visual habits of auto drivers, with and without restricted vision, and explains the fixation movements by the contradictory requirement of perceptual anticipation and vehicular alignment with the road. This kind of investigation gives information useful for roadway design, signs and the question of the danger from tunnel vision.

There is increasing concern in Great Britain about drivers' vision. Ritz (79) cites some of the older data from the United States and discusses driving and road safety. A lecture by Moore (12) is reported which indicates that driving accidents are more frequent below age 25 and over age 75, giving a span of safer driving until quite late in life. Color vision defects were not considered serious, glare was a detriment, and windscreen pillars of over 2 inches wide were critized adversely. A considerable report from the Association of Optical Practitioners should be examined. More efficient vision testing for drivers is recommended (10, 16). Barling (19) calls attention to the possible hazards from retinal degeneration and unilateral cataracts. Screening should be done with the ophthalmoscope and retinoscope. Cover test and stereopsis testing should be added when time permits (17). Davey (33) urges standardization of screening tests. The desirability of a test for dynamic visual acuity and glare resistance should be determined. Measurement of the visual field and for heterophoria (muscle balance) is desirable, a color naming test should be added to screeners, and stereopsis testing was deemed questionable. Davey (31) reports the results from visual screening at two motor shows: 98. 7 percent at the Racing Car Show had vision of $^6/_{12}$ or better (20/40) and 98. 2 percent were $^6/_{10}$ or better (20/33) at the Motor Show.

Coleman (29) found about 5 percent of 1000 people screened at Providence, Rhode Island, to have less than 20/40 vision. In over 100, 000 screening tests in Oregon, Syring (92) reports slightly over 1 percent failed and were referred for professional eye care. Most of these people were required to wear glasses when they completed their certificates and about 3 percent were limited to daytime-only driving. A person on renewing his license must state there has been no change in the condition of his vision since his previous license was issued. Because some changes in vision, e.g., slowly developing cataract, can occur without one's knowledge, it will be interesting to learn how useful this question will be. English (38) points out advantages obtainable from good vision screening.

Payne (69) describes an ingenious device to demonstrate their poor vision to those people inclined to believe that their vision is better than it is. A scale model shows cars as if at 300 yd, and the task is to stop them when abreast. Another test reveals central and peripheral vision with cheating eliminated (10). Test letters with and without serifs revealed no clinically significant differences between them (77).

Acuity and contrast vision at road luminances is reported with respect to age (78). Reading and Hofstetter (75) discuss stereopsis with reference to the horopter. Brake reactions are useful in relating seeing to response and Johansson and Rumar (53) found the median to be 0.9 sec; a quarter of their subjects were over 1.2 sec and on a few occasions 2 sec were observed. Reaction to the unexpected was 0.2 sec longer, and with some degree of anticipation the median reaction time was 0.66 sec.

Linksz' (60) discussion of color vision and testing should be read by anyone concerned with the subject. He shows why attempts to correct color vision with colored glasses must fail. Kelley (54) reports on 9 colors with maximal contrast and 22 colors that could be used for color coding. Color thresholds, perception and retinal position publications that will be useful should color coding of roads increase are available (58, 62, 96). Transmission curves for amber European glasses are published by Phillips and Rutstein (71) who found glare recovery was slower when amber lenses were worn, by 3.28 to 6.06 sec or 2.5 to 327 percent, averaging 54 percent.

When a flash signal is perceived as a circle it is likely to be color identified, but if seen as shapeless will usually be seen as achromatic whatever its color. With short flash exposures yellow was detected at lowest luminance, followed closely by green and blue, but blue-green and red required greater luminances to be detected. For correctly seen, the order was green, blue-green, yellow, blue, and red (80).

Davey's (32) report on European sunglasses is of interest for daylight driving. Bryan reports (24) on a night driving glass absorbing light only from the side of the approaching car. An editorial (11) condemns tinted glasses for wear at night, and Allen (2) warns against the use of absorbing paints for windshields. People with color vision deficiencies were not more involved with accidents than those with normal color vision (43). Drug effects and traffic lights are also discussed by Gramberg-Danielsen (43) from the viewpoint of an ophthalmologist. Kishto (56) found that at lower luminances blue rather than red is the advancing color and this casts some doubt on any advantage for the suggestion of replacing red with green tail lights. Another colored road (93) is reported, with lower reflectances than for concrete and brightened asphalt. Mercury lighting revealed yellow best, tungsten lighting red, and sodium lighting gave only a gray scale. These experiments should be tested also with color vision deficient people.

Problems of seeing after removal of a cataract are discussed by Linksz (61) and Peyresblanques (70). With unilateral aphakia, stereoscopic vision is usually lost or diminished. The present French law for driving licenses is criticized and the need for periodic examination for increasing loss of vision from age is stressed (70).

Sédan (87) has published a long revue of the effects of drugs on the eye and Green and Spencer (45) call attention to drugs affecting vision. The Institute of Transportation of the University of California is investigating the possible effects of tranquilizers on driving (6). Based on smoking two cigarettes, the effect of tobacco on detection ability for objects on the road is believed negligible (51). A blood alcohol concentration of 0.065 percent produced no obvious changes of mean threshold luminance during dark adaptation, during and after glare, in scotopic and mesopic visual acuity and average pupil diameter. The only adverse findings reported by Verriest and Laplasse (95) was a slight decrease in glare resistance at later stages. Abstinent subjects might sustain their performance by an increase in vigilance. On the other hand Roper and Meese (81) found a seeing distance loss of 10 to 100 ft from two drinks of alcohol. Visual disturbances and migraine headaches experienced by some women taking contraceptive pills (15) should be evaluated as to how much of a hazard for women when driving. Drug effects and driving are also discussed with reference to color vision (43). Jayle et al. (50) report that anthocyanosides from myrtle can produce small improvements in dark adaptation.

Eighteen-year-olds tested by Paul (68) showed decreased vision after 46 hours of deprivation of sleep. Acuity declined slightly, phoria at near increased 3 prism diopters, at far 1 diopter and stereopsis declined about 3 percent. There is a marked increase in the scatter of light within the eye beginning about age 40, which matches the increased sensitivity of glare of the elderly, according to Wolf and Gardiner (102). Greater changes were found in the lens than in the vitreous. Fatal accidents increase with people over 70 when the rate is then about the same as for those under 19 (5). The pupil area of the eye is reduced to one-third at age 80, acuity drops to 50 percent, as does reaction time, flicker awareness decreases, brightness adaptation is half as good, dark adaptation time increases to about twice and glare resistivity is said to be 2½ times worse at 65 than at 25 (8).

The restriction against contact lens wearing by aviation personnel is believed too strict and this should be put on a personal basis, according to Wick (100). Spectacles for driving should have minimum-sized frames so that very little of the field of view is obscured (14). Larger lenses are preferable for this reason (13). A pilot study showed that nearly half of the spectacles made for the medically indigent failed to meet the prescriptions (59). Green and Port (46) discuss the problem of misting of goggles. Connolly (30) and Davey (34) discuss improvement in automobiles that would aid seeing by the driver.

While not directly applicable to night driving vision at present speeds, less contrast is required for seeing when weightless (98). Vibration decreases seeing under certain conditions (36) and short exposures to 150 db noise is within human tolerance (66).

REFERENCES

1. Allen, M. J. Running Light Questionnaire. Amer. Jour. Optom., Vol. 42, pp. 164-167, 1965.
2. Allen, M. J. Tinted Windshields Are a Hazard. Optom. Weekly, Vol. 56, No. 18, pp. 76-77, 1965.
3. Allen, M. J. Automobile Visibility Problems. Jour. Amer. Optom. Assoc., Vol. 36, pp. 807-810, 1965.
4. Allen, M. J., and Lyle, W. M. The Relationship Between Night-Driving Ability and the Amount of Light Needed for a Specific Performance on a Low Contrast Target. Ophth. Optician, Vol. 5, pp. 675-678, 1965. (Cf Literature IX, 1963: Highway Research Record 70, pp. 41-47, 1965.)
5. Allgaier, E. Age Exposure and Accidents. Amer. Auto. Assoc., 1964. 6 pp.
6. Too Tranquil Drivers? ITTE Quart. Bull., Vol. 11, No. 4, p. 2, April 1965. Highway Research Abstracts, Vol. 35, No. 9, p. 7, Sept. 1965.
7. Glare-Reducing Windscreen. Modern Transport, Vol. 93, No. 2390, p. 24, March 1965. Highway Research Abstracts, Vol. 35, No. 9, p. 6, Sept. 1965.
8. How Much Do We Need? Jour. Amer. Optom. Assoc., Vol. 36, p. 65, 1965.
9. B.O.A. Edinburgh Vision and Road Transport. Ophth. Optician, Vol. 4, p. 1274, 1964.
10. Visual Efficiency and Road Safety. Ophth. Optician, Vol. 5, pp. 1057-1058. Road Safety and Visual Efficiency. Ophth. Optician, Vol. 5, pp. 1120-1122, 1965.
11. Tints for Night Driving. Optician, Vol. 148, p. 586, 1964.
12. Road Safety. Optician, Vol. 148, p. 593, 1965.
13. The Motorist's Glasses. Optician, Vol. 149, p. 40, 1965.
14. Better Driving Glasses Wanted. Optician, Vol. 149, p. 74, 1965.
15. Visual Disturbances, Headaches and "The Pill." Optician, Vol. 150, p. 4, 1965.
16. Drivers Vision: The A.O.P. Report. Optician, Vol. 150, p. 331, 1965.
17. Concerning Visual Screening. Optician, Vol. 150, p. 357, 1965.
18. Armington, J. C. Vision. Ann. Rev. Physiol., Vol. 27, pp. 163-182, 1965.
19. Barling, G. M. Visual Standards for Driving. Brit. Med. Jour., p. 944, Oct. 10, 1964.
20. Benitte, A.-C. La vision nocturne. Concours Med., Vol. 87, pp. 1029-1041, 1965.
21. Burg, A. Visual Acuity and Driving Record. Highway Research Record 122, pp. 1-6, 1966.
22. Bonvallet, G. G., et al. Visibility Distance as Affected by Roadway Lighting Parameters. I.E., Vol. 60, pp. 355-363, 1965.
23. Bourassa, C. M., and Bartley, S. H. Some Observations on the Manipulation of Visual Acuity by Varying the Rate of Intermittent Stimulation. Jour. Psych., Vol. 59, pp. 319-328, 1965.
24. Bryan, W. E. Progress Report on Night Driving Lenses. Highway Research News, No. 17, p. 75, Feb. 1965.

25. Byrnes, V. A. Visual Requirements for Motorists. Sight Saving Rev., Vol. 35, pp. 7-8, 1965.
26. Campbell, F. W., and Green, D. G. Monocular vs Binocular Visual Acuity. Nature, Vol. 208, pp. 191-192, 1965.
27. Candler, J. Woman at the Wheel. Optom. Weekly, Vol. 56, No. 23, pp. 40-42, 1965.
28. Carter, D. B., and Weiner, G. Abstract Services in the Field of Visual Science. Jour. Amer. Optom. Assoc., Vol. 36, pp. 901-905, 1965.
29. Coleman, H. M. An Analysis of the Results of a General Visual Screening Project. Optom. Weekly, Vol. 56, No. 25, pp. 19-24, 1965.
30. Connolly, P. L. Automobiles, Vision and Driving. Optom. Weekly, Vol. 56, No. 48, pp. 26-28, 1965.
31. Cutler, G. H., and Davey, J. B. Visual Screening: Motor Show 1961, Racing Car Show 1961/62. 1. The Vision of the Two Groups of Drivers. Brit. Jour. Physiol. Opt., Vol. 22, pp. 114-119, 1965.
32. Davey, J. B. Sunspectacles: Their Use by the Driver. Optician, Vol. 149, pp. 249-250, 1965.
33. Davey, J. B. Visual Screening for Drivers: Some Suggestions for Procedures. Optician, Vol. 150, pp. 317-320, 1965.
34. Davey, J. B. An Optician at the Motor Show. Part II. Optician, Vol. 150, pp. 492-493, 1965.
35. Davies, E. B. Contrast Thresholds for Air to Ground Vision. Roy. Aircraft Estab. Tech. Rept. 65089. AD 470735. 1965. 45 pp.
36. Dennis, J. P. The Effect of Whole-Body Vibration on a Visual Performance Task. Ergonomics, Vol. 8, pp. 193-205, 1965. Bi. Absts., Vol. 46, p. 96778, 1965. Some Effects of Vibration Upon Visual Performance. Jour. Appl. Psych., Vol. 49, pp. 245-252. Aerospace Med., Vol. 36, No. 12, p. A141, 1965.
37. D.S.I.R. Road Res. Lab. Research on Road Traffic. 1965. 516 pp. (Not available to author—should be examined.)
38. English, R. J. Periodic Visual Testing of Drivers. Traffic Dig. Rev., Vol. 13, pp. 17-18, 1965. Highway Research Abstracts, Vol. 35, No. 4, p. 10, April 1965. Reprinted in Optom. Weekly, Vol. 56, No. 32, pp. 53-55, 1965.
39. Fisher, A. J., and Christie, A. W. A Note on Disability Glare. Vision Res., Vol. 5, pp. 565-571, 1965.
40. Gordon, D. A. Experimental Isolation of the Driver's Visual Input. Highway Research Record 122, pp. 19-34, 1966.
41. Gordon, D. A., and Michaels, R. M. Static and Dynamic Visual Fields in Vehicular Guidance. Highway Research Record 84, pp. 1-15, 1965.
42. Graham, C. H., et al. Vision and Visual Perception. J. Wiley and Sons, New York, 1965. 637 pp.
43. Gramberg-Danielsen, B. Farbenuntüchtigkeit und Strassenverkehr. Zentralbl. Verkerhsmed. Psych., Luft Raumfartmed., Vol. 11, pp. 1-12, 1965.
44. Grindley, G. C., and Townsend, V. Binocular Masking Induced by Moving Object. Quart. Jour. Exp. Psych., Vol. 17, pp. 97-109, 1965. Aerospace Med., Vol. 36, No. 11, p. A125, 1965.
45. Green, H., and Spencer, J. Side-Effects of Drugs. Optician, Vol. 149, pp. 240-241, 1965.
46. Green, M. W. J., and Port, M. J. A. The Misting of Motorcycle Goggles. Optician, Vol. 149, pp. 615-618, 1965.
47. Hahn, D., et al. Seven-Place Tables of the Planck Function for the Visible Spectrum. F. Viewg and Sohn, Braunschweig, 1965. 135 pp. (Academic Press, New York.)
48. Human Factors in Highway Research To Promote Efficient Traffic Flow and Safe Motor Vehicle Operation. Highway Research News, No. 19, pp. 37-40, June 1965.
49. Ikeda, M., and Boynton, R. M. Negative Flashes, Positive Flashes, and Flicker Examined by Increment Threshold Technique. Jour. Opt. Soc. Amer., Vol. 55, pp. 560-566, 1965.

50. Jayle, G. E., et al. Étude concernant l'action sur la vision nocturne. Ann. Oculistique, Vol. 198, pp. 556-562, 1965.
51. Johansson, G., and Jansson, G. Smoking and Night Driving. Scand. Jour. Psych., Vol. 5, pp. 124-128, 1964.
52. Johansson, G., and Rumar, K. Silhouette Effects in Night Driving. Univ. Uppsala, Rept. 19, 1964. 36 pp.
53. Johansson, G., and Rumar, K. Driver's Brake-Reaction Times. Univ. Uppsala, Rept. 26, 1965. 16 pp.
54. Kelley, K. L. Twenty-Two Colors of Maximum Contrast. Color Eng., Vol. 3, No. 6, pp. 26-27, 1965.
55. Kinney, J. A. S., and Connors, M. M. Recovery from Foveal Dark Adaptation. Highway Research Record 70, pp. 35-40, 1965.
56. Kishto, B. N. The Colour Stereoscopic Effect. Vision Res., Vol. 5, pp. 313-329, 1965.
57. Klerk, L. F. W., de, et al. The Dynamic Visual Acuity of 30 Selected Pilots. Aeromedica Acta, Vol. 9, pp. 129-136, 1963-64. Aerospace Med., Vol. 36, pp. 894-895, 1965.
58. Krauskopf, J., and Srebro, R. Spectral Sensitivity of Color Mechanisms: Derivation from Fluctuations of Color Appearance Near Threshold. Science, Vol. 150, pp. 1477-1479, 1965.
59. Light, H. L., and Rosenthal, J. Pilot Study of Quality and Standards in Filling Spectacle Prescriptions. Public Health Repts., Vol. 80, pp. 401-404, 1965.
60. Linksz, A. An Essay on Color Vision and Clinical Color-Vision Tests. Grune and Stratton, New York, 1964. 254 pp. Cf. also, Colored Lenses and Colored Vision. Am. Jour. Ophth., Vol. 60, pp. 1135-1136, 1965.
61. Linksz, A. Optical Complications of Aphakia. Int. Ophth. Clin., Vol. 5, pp. 271-308, 1965.
62. Luria, S. M., and Weissman, S. Effect of Stimulus Duration on the Perception of Red-Green and Yellow-Blue Mixtures. Jour. Opt. Soc. Amer., Vol. 55, pp. 1068-1072, 1965.
63. Meister, D., and Rabideau, G. F. Human Factors Evaluation in System Development. J. Wiley and Sons, New York, 1965. 307 pp.
64. Miller, S. I., and Reeder, C. E. Kinetic Visual Acuity. The Effect of Increased Lead-In Time on Kinetic Visual Acuity. Brit. Jour. Physiol. Opt., Vol. 22, pp. 46-52, 1965.
65. Mintz, S. A. A National Survey of Automobile Drivers' Vision. Optom. Weekly, Vol. 56, No. 22, pp. 25-26, 1965.
66. Mohr, G. C., et al. Effects of Low Frequency and Infrasonic Noise on Man. Aerospace Med., Vol. 36, pp. 817-824, 1965.
67. Oppenlander, J. C., and Wright, J. M. Evaluation of Intersection Illumination. Highway Research News No. 17, pp. 43-74, Feb. 1965.
68. Paul, A. Effects of Sleep Deprivation on Visual Function. Aerospace Med., Vol. 36, pp. 617-620, 1965.
69. Payne, C. G. New Driving Vision Test. Ophth. Optician, Vol. 5, pp. 89-790, 1965.
70. Peyresblanques, J. Aphakie et conduite automobile. Bull. Soc. Ophtal. Franc., Vol. 64, pp. 595-597, 1964.
71. Phillips, A. J., and Rutstein, A. Glare: A Study into Glare Recovery Time with Night Driving Spectacles. Brit. Jour. Physiol. Opt., Vol. 22, pp. 153-164, 1965.
72. Potsaid, M. S. Cine and TV Methods of Analyzing Search in Roentgen Diagnoses. Jour. SMPTE, Vol. 74, pp. 731-736, 1965.
73. Powers, L. D. Effectiveness of Sign Background Reflectorization. Public Roads, Vol. 33, No. 8, pp. 172-178, June 1965. Highway Research Abstracts, Vol. 35, No. 10, p. 15, Oct. 1965.
74. Rashevsky, N. Man-Machine Interaction in Automobile Driving. Traffic Safety Res. Rev., Vol. 9, No. 4, pp. 101-107, 1965.

75. Reading, R. W., and Hofstetter, H. W. Extrahoropteral Stereopsis in Vehicle Operator Orientation. Highway Research News, No. 17, pp. 84-90, Feb. 1965.
76. Richards, O. W. Vision at Levels of Night Road Illumination: X. Literature 1964. Highway Research Record 70, pp. 67-73, 1965.
77. Richards, O. W. A Comparison of Acuity Test Letters With and Without Serifs. Amer. Jour. Optom., Vol. 42, pp. 589-592, 1965.
78. Richards, O. W. Vision at Levels of Night Road Illumination: XII. Changes in Acuity and Contrast Sensitivity with Age (Abstract). Amer. Jour. Optom., Vol. 42, p. 627, 1965.
79. Ritz, N. W. Vision and Road Safety. Optician, Vol. 150, pp. 34-36, 63-64, 1965.
80. Ronchi, L., and Tittarelli, R. Detection of Circular Light Signals in Relation to Shape and Color Identification. Atti Fond. G. Ronchi, Vol. 20, pp. 61-76, 1965.
81. Roper, V. J., and Meese, G. E. More Light on the Headlighting Problem. Highway Research Record 70, pp. 29-34, 1965.
82. Rubin, M. L. Optics and Visual Physiology. Annual Review Arch. Ophth., Vol. 73, pp. 863-889, 1965.
83. Rumar, K. Comparison of the Visibility and Readability Between Conventional License Plates and License Plates with a Reflective Background. Internat. Police Chronicle, Vol. 13, No. 70, pp. 21-44, 1965.
84. Saugstad, P., and Lie, I. Training of Peripheral Visual Acuity. Scand. Jour. Psych., Vol. 5, pp. 218-224, 1964. Highway Research Abstracts, Vol. 35, No. 8, p. 6, Aug. 1965.
85. Schober, H. A. W. Influence of Disability Glare on Highway Visibility in Fatigued and Normal Observers. I. E., Vol. 60, pp. 414-418, 1965.
86. Schwab, R. N. Night Visibility for Opposing Drivers with High and Low Headlight Beams. I. E., Vol. 60, pp. 364-372, 1965.
87. Sédan, J. Pathologie oculaire d'origine médicamenteuse. Ann. Ocul., Vol. 198, pp. 212-262, 1965.
88. Shipley, T. Auditory Flutter-Driving of Visual Flicker. Science, Vol. 145, pp. 1328-1330, 1964.
89. Sim, I. The Characteristics of Mesopic Vision. Austr. Jour. Optom., Vol. 48, pp. 3-24, 1965.
90. Sperling, G. Temporal and Spatial Visual Masking: I. Masking by Impulse Flashes. Jour. Opt. Soc. Amer., Vol. 55, pp. 541-559, 1965.
91. Stenstrom, S. Optics and the Eye. Butterworth's, London, 1964. 190 pp.
92. Syring, E. M. Vision Screening Integral Part of Oregon Driver Examination. Oreg. Optom., Vol. 32, No. 2, pp. 6-9, 1965.
93. Szadkowski, G. von. Report on the Construction of a Colored Concrete Test Road in Wuppertal. Highway Research News, No. 21, pp. 39-43, Nov. 1965.
94. Turner, H. J. The Interaction Between Fixed Lighting and Vehicle Headlights. Jour. Austr. Road Res. Board, Vol. 2, No. 3, pp. 3-22, 1965. Highway Research Abstracts, Vol. 35, No. 9, p. 7, Sept. 1965.
95. Verriest, G., and Laplasse, D. New Data Concerning the Influence of Ethyl Alcohol on Human Visual Thresholds. Exp. Eye Res., Vol. 4, pp. 95-101, 1965.
96. Weissman, S., and Kinney, J. A. S. Relative Yellow-Blue Sensitivity as a Function of Retinal Position and Luminance Level. Jour. Opt. Soc. Am., Vol. 55, pp. 74-77, 1965.
97. Westheimer, G. Visual Acuity. Ann. Rev. Psych., Vol. 16, pp. 359-380, 1965.
98. White, W. J. Effects of Transient Weightlessness on Brightness Discrimination. Aerospace Med., Vol. 36, pp. 327-331, 1965.
99. Whiteside, T. C. D., et al. Visual Illusions of Movement. Brain, Vol. 88, pp. 193-210, 1965.
100. Wick, R. L., Jr. Clinical Problems in Aviation Medicine: Civil Aviation and Contact Lenses. Aerospace Med., Vol. 36, pp. 127-130, 1965.

101. Winke, R. E. The Effect of Flash Distribution and Illumination Level Upon the Detection of Low Intensity Light Stimuli. Hum. Factors, Vol. 6, pp. 305-311, 1964.
102. Wolf, E., and Gardiner, J. S. Studies on the Scatter of Light in the Dioptric Media of the Eye as a Basis of Visual Glare. Arch. Ophth., Vol. 74, pp. 338-345, 1965.
103. Stevens, S. S., and Diamond, A. L. Effect of Glare Angle on the Brightness Function for a Small Target. Vision Res., Vol. 5, pp. 649-659, 1965.

Effect of Sign Position and Brightness on Seeing Simulated Highway Signs

T. W. FORBES, R. F. PAIN, J. P. FRY, JR., and R. P. JOYCE
Department of Psychology and Division of Engineering Research,
Michigan State University

Simulated "interstate green" signs of varying brightnesses were shown to subjects against typical highway backgrounds. Subjects were asked to indicate which signs they could see best under the various conditions depicted, and were simultaneously required to engage in an auxiliary task involving fixation upon small red lights at road level. Experiments performed were designed to study the variables of sign position and brightness in relation to ease of seeing signs under simulated highway conditions.

•A PREVIOUS paper (1) described the program of research on highway traffic sign requirements, the first phase of which was an annotated bibliography (2) of pertinent research reports for the preceding 10 years. Another paper (3) described a general experimental procedure employing a secondary or auxiliary task to load the subject and assure visual fixation at road level on a projected highway scene. The primary task consisted of indicating which of 4 simulated signs flashed on the screen at intervals were seen first and best. The auxiliary task was to relight a number of small red lights which went out in random order from a matrix of 12 lights located just below the highway pictured on the screen. The present report gives the results of the first 5 experiments undertaken using this general experimental procedure.

The general objective of this research was to measure the effects of various highway sign characteristics on attention value and actual seeing of the sign when viewed on the highway against various backgrounds. The aim was to control as many variables as possible in a laboratory setup so as to measure the probability of a sign being seen. It was not the purpose to measure the distance at which a sign first becomes legible, but rather whether it is more likely or less likely to be seen among other signs and background objects when suddenly exposed to view in traffic situations such as emerging from behind a large truck, coming over a hill, or rounding a curve.

RESEARCH PROGRAM

The laboratory simulation procedure involved colored scenes projected on a screen in front of a subject, who sat with a series of four buttons under his right hand and responded to simulated signs flashed on the background highway scene. He indicated the location of the sign seen first and best by pushing the appropriate button, and similarly indicated those seen second, third, and fourth.

An auxiliary task consisted of relighting from 1 to 4 small red signal lights in a matrix of 12 by pushing 1 of 4 buttons under the left hand corresponding to the number of lights extinguished. Automatic control circuits randomly varied the number of lights turned off and the subject's own response paced the task.

Subjects were male and female college students. Prior to experimental participation they were questioned on driving experience, age, color blindness, and knowledge

---

Paper sponsored by Committee on Night Visibility and presented at the 45th Annual Meeting.

of procedure used. In a very few cases the subject adopted a procedure which indicated that he had misunderstood the instructions; these cases were eliminated before data analysis was begun.

The instructions were to respond to signs as if the subject were driving on a highway, and to continue relighting the small signal lights whenever they went out. When a set of simulated signs was exposed, the subject was to indicate by pushing the appropriate buttons which of the signs he saw first and best, which second, etc. In each case the subject was given a period of practice in order to become acquainted with the experimental set-up and the operation of the buttons.

Visual adaptation was obtained by projecting the next background to be used during the practice period and preceding each series. Due to the auxiliary task, visual fixation was on the road at the instant each sign combination was actuated. Actuation of the next sign presentation occurred after 2 or more light signal responses, and was triggered by one of the left-hand responses in random order. The background scenes were selected from color photos taken on the highway for this particular purpose. The attempt was to obtain representative scenes with relatively even brightness of background in order to control that factor. Simulated signs of a color approximating interstate green were photographed overlaying the background scenes in order to produce the stimulus slides. Brightness of the different simulated signs was varied by using different density neutral filter layers of the same photographic material as the signs and superimposed on the basic color. Four degrees of brightness were chosen to obtain a practical range for experimental use (see Appendix).

Figure 1 shows the subject's view of the simulated signs and the location of the red signal light matrix in the foreground. Figure 2 shows the 2 sets of response buttons and the control and recording equipment. with the dual tachistoscope panel and shutters at the upper right.

Two types of scoring were used—the number of first responses for each sign brightness and position, and the number of subjects giving a predominant first response for

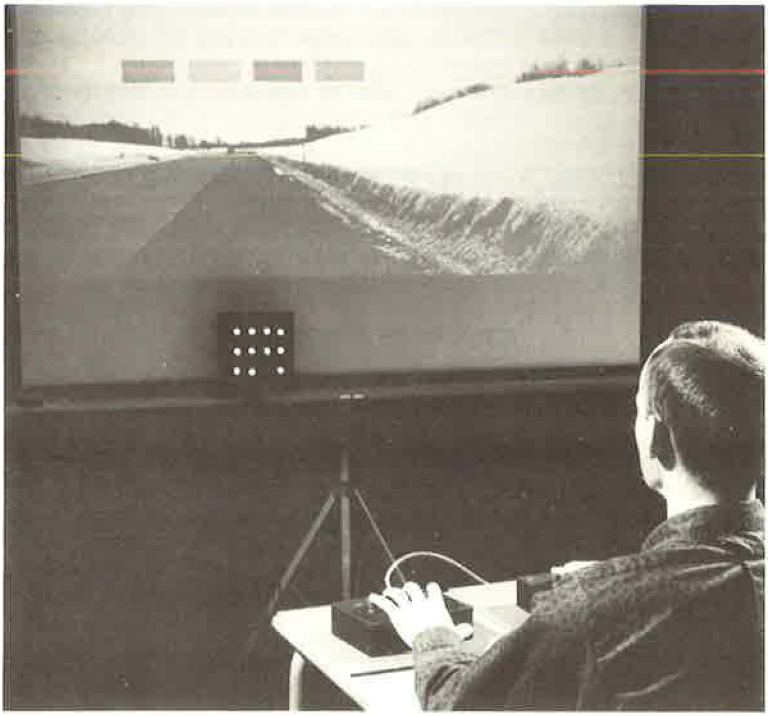

Figure 1. Highway scene with simulated signs and signal lights of auxiliary task.

a given stimulus combination. The "first seen" responses to each sign were expressed as percentages of each subject's responses to a given series of slides (24 unless some were omitted). The total "first" responses to each sign were added for the group of subjects and expressed as a percentage of the total response of the group. That is, for Subject A

	Sign 1	Sign 2	Sign 3	Sign 4
	f_1	f_2	f_3	f_4
Percent "seen first"	$\frac{f_1}{\Sigma f}$	$\frac{f_2}{\Sigma f}$	$\frac{f_3}{\Sigma f}$	$\frac{f_4}{\Sigma f}$

where $\Sigma f = 22\text{-}24$. For Group A . . . N

Percent "seen first" $$\frac{\sum_{A}^{N} f_1}{\sum_{A}^{N} \Sigma f} \quad \cdots\cdots\cdots\cdots\cdots\cdots\cdots$$

Analysis of variance, the median test or the sign test was used, depending on the type of data, to test whether differences were greater than expected by chance. Difference presentation orders were analyzed separately first and then combined where

Figure 2. Response buttons, control, recording equipment and dual tachistoscope (upper right).

differences between the groups were not significant. Data were also tabled, charted, and plotted to show the relationships exhibited.

Effects of Sign Position and Brightness

The purpose of Experiment 1 was to check for effect of sign position and to measure effects of sign brightness against background without letter effects. Blank simulated signs of 4 brightnesses were located 2 over and one on each side of the highway in one series, and all 4 over the highway in another series. Both day-snow and night backgrounds were used. Groups of 10, 11, 10 and 12 subjects each saw the signs against a different background.

Analysis of the first choices showed that signs in positions over the highway were seen first relatively more frequently than those beside the highway. This was true when effects of relative brightness of the simulated signs were equalized. Table 1 shows that the differences between sign positions were significantly greater than chance. In addition, with position balanced out, the brighter signs were seen more frequently against the night background and the darker signs against the day background (Fig. 3).

Because signs over the highway were seen first more frequently, this position had an advantage in the laboratory setup. This might occur partly from the controlled situation using eye movements starting from the signal light matrix in the foreground. Position preference on an actual highway might or might not be similar, depending on illumination and other conditions. For valid comparisons in the laboratory situation, however, it was decided to use only the "over the highway" position in future experiments. Results would be applicable to side-positioned signs if background and other variables were the same.

Experiment 5 was run later to check the effect of blank sign brightness seen against two other backgrounds used in Experiments 2 and 3. In this experiment a group of 10

TABLE 1

EFFECT OF LOCATION OF SIMULATED SIGNS RELATIVE TO ROADWAY[a]

Item	Day				Night			
	df	SS	MS	F	df	SS	MS	F
(a) Overhead Only								
Signs	3	1,858	619.3	9.8[b]	3	2,117.8	706	34.44[b]
Position	3	93	31	0.5	3	150.9	50.3	2.45
S × P	9	24	2.67	0.037	9	102.7	11.4	0.56
Within	144	9,084	63.1		144	2,958.9	20.5	
	159	11,059			159	5,330.3		
(b) Overhead and Side								
Signs	3	4,781.5	1,593.8	41.6[b]	3	3,006.3	1,002.1	50.4[b]
Position	3	410.3	136.8	3.57[c]	3	1,022.4	340.8	17.1[b]
S × P	9	151.5	16.8	0.44	9	58.0	6.4	0.32
Within	160	6,126.2	38.3		112	2,223.4	19.9	
	175	11,469.5			127	6,310.1		

[a] Analysis of variance of frequency signs were seen first—4 brightnesses, 4 positions.

[b] Significant at P <0.001.

[c] Significant at P <0.05.

subjects saw day-hill and the second night background with blank signs followed by day-snow with blank signs. A second group of 12 subjects was shown the same slides in reverse order to balance out possible order effects. The results were similar to the overhead presentation results from Experiment 1 and confirm Experiment 1 for the second night backgrounds and the day-hill, which had not previously been used with blank signs. Figure 3 shows the results of Experiments 1 and 5.

Effects of Relative Sign and Letter Brightness

The purposes of Experiment 2 were to check the results of Experiment 1 and to measure the effect of lettered signs against several backgrounds. Simulated signs of the 4 brightnesses were used with 5 white nonsense letters on each sign. Backgrounds employed were day-snow, day-hill (a dark hill below a bright day sky, with signs projected against the hill), and 2 twilight scenes which had been made by reduced exposure of the day-snow slide. The reduced exposure had the effect of producing darker and darker scenes in which the signs as well as the highway and background all were reduced in brightness. Also used in Experiment 2 were the same blank signs against a night background as had been shown to the subjects in Experiment 1. This was done in order to relate the results of the 2 experiments.

Two groups of 16 subjects (a total of 32) each saw the signs against all 5 backgrounds. Group 1 saw them in the order of night, twilight, day-snow, and day-hill; Group 2 was shown the same slides in reverse order. The backgrounds used in the practice series were half day and half night (12 each). In order to adapt vision to the next following series, the practice series was ended with night for Group 1 and with day for Group 2.

Results against the night and day-snow backgrounds were similar to those in Experiment 1, i.e., the brightest signs were seen first most frequently against night and

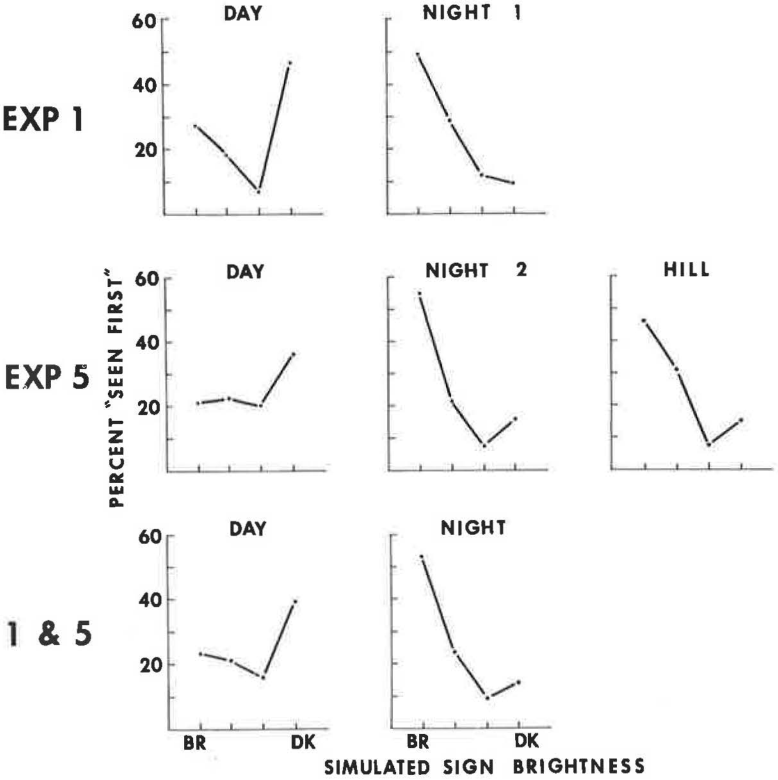

Figure 3. Effect of relative brightness of blank simulated signs.

the darker signs against the day background. The 2 simulated twilight scenes gave results similar to that of day-snow. Against the day-hill background, however, the second brightest sign was seen first most frequently. This was the most saturated green used, the brightest sign being somewhat desaturated by a white translucent layer. Figure 4 shows the results of Experiment 2.

Experiment 3 involved further measurements to check the results of Experiment 2, especially for the day-hill background. In addition, this experiment was designed to check the similarity of patterns for the 2 twilight backgrounds and for lettered signs against a night background. The same lettered signs were used as in Experiment 2, plus a lettered sign against an improved night background (night 2). The same day-snow, day-hill, and darker of the 2 twilight backgrounds were employed. There was also an additional intermediate background using the dark twilight scene but with signs at full brightness. This last series of presentation slides was made by placing the simulated signs on a print of the dark twilight background and then photographing with full lighting. This had the effect of maintaining the dark background, with the higher brightness of the signs comparable to that in the day-snow series.

Two groups of 13 subjects (total of 26) each saw the complete series of backgrounds, again with orders reversed. Care was taken to adapt vision for the next series by allowing several minutes between series with the new background on the screen. The results of the experiment (Fig. 5) were generally similar to those of Experiment 2 for night and day patterns. However, one group saw the bright signs first more frequently against day-snow and twilight backgrounds than did the other group. The differences between the 2 groups were tested for significance by separately scoring each individual as to his predominant response; i. e., if he saw Sign 1 the largest proportion of times, he was scored as predominately seeing this sign even though he also reported Signs 2, 3, and 4 a few times. The frequencies for the 2 groups were then examined by means

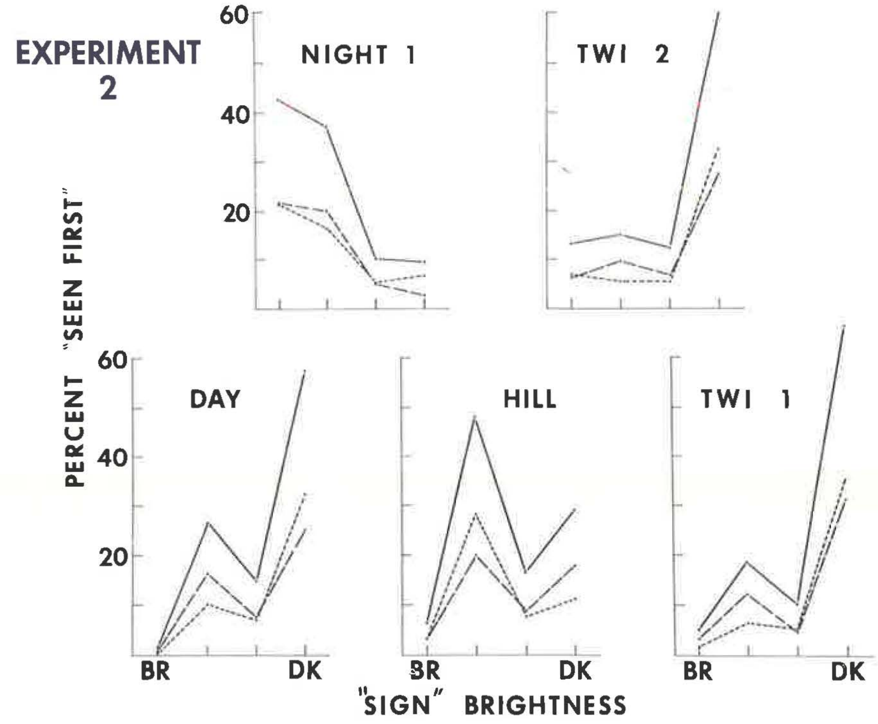

Figure 4. Effect of relative sign and letter brightness: dotted line = Group 1, dashed line = Group 2, and solid line = total group response.

of a contingency chi-squared test, which showed that the groups differed significantly only for the day-snow and dark twilight backgrounds, and that there were no significant differences in the rest of the results. The higher percentages for Sign 2 were similar to a hump in the curves for Experiment 2.

Thus, Experiment 3 indicated that some subjects may respond first more frequently to bright signs against day-snow, darker twilight, and intermediate backgrounds. The brightest 2 signs were consistently seen first most frequently against the night 2 and day-hill backgrounds.

Results from Experiments 2 and 3 were then combined (Fig. 6). They showed that the 2 highest brightness signs were seen first most frequently against day-hill and night backgrounds, with the second brightest (most saturated color) being seen slightly better than the brightest against the day-hill scene. First responses to the dark twilight, day-snow, and intermediate backgrounds in Experiment 3 showed a puzzling hump or else a double-ended characteristic in percentage of "seen first" responses. One pattern corresponded to the results of Experiments 1 and 5, where the darkest sign was seen first most frequently against day-snow. A reverse response by some subjects, however, was responsible for the hump in the curves (Figs. 4 and 5). This was more the pattern for the night and day-hill backgrounds.

Effect of Instructions

Experiment 4 was designed to test whether instructions had unintentionally introduced the idea that responses to different background series should be the same. This experiment was run because during Experiments 2 and 3 the possibility had arisen that some subjects might be developing a habit of responding to the first series viewed which

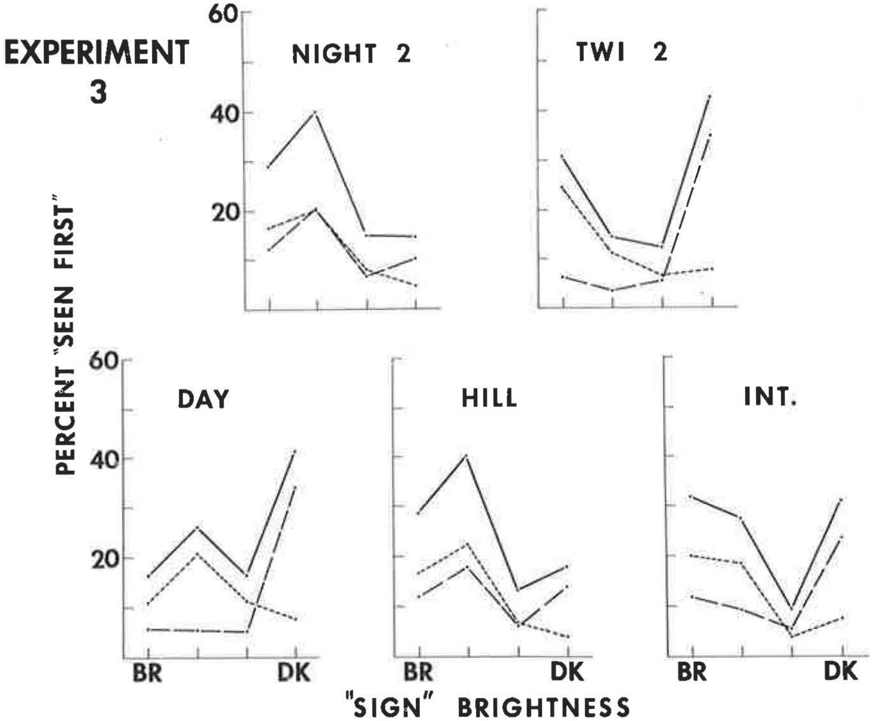

Figure 5. Effect of relative sign and letter brightness: dotted line = Group 1, dashed line = Group 2, and solid line = total group response.

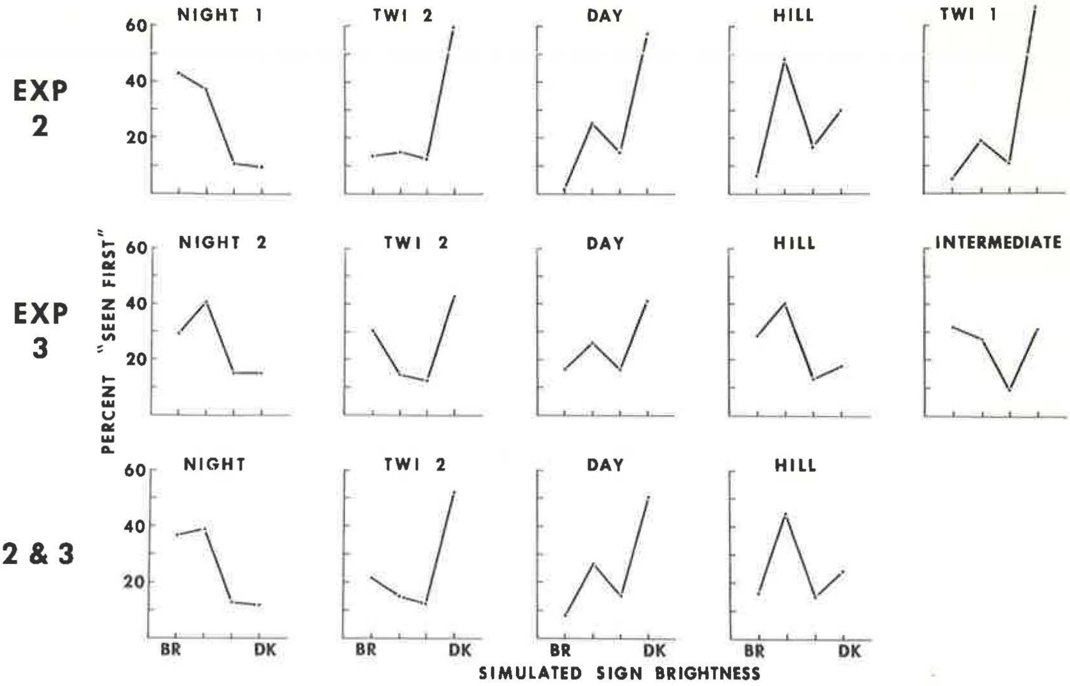

Figure 6. Combined effects of relative sign and letter brightness.

influenced later series. In the experiment, 13 subjects were shown the same backgrounds as those shown in Experiment 3 (day to night order), but instructions were modified to stress the possibility that different presentation series might be seen differently. The results show a reversal of the night pattern which had been consistent in the other experiments. It was concluded, therefore, that the subjects had been influenced to analyze the presentations afterward rather than to respond with their first reactions. These responses as a result were probably not as closely related to those on the road as the responses to the original instructions had been.

CONCLUSIONS

From the entire group of experiments, it can be concluded that the signs highest in brightness were seen first most frequently against night backgrounds. The lower brightness signs were seen first most frequently against the day-snow background, but some subjects saw the high brightness signs first against these backgrounds also. Against the hill in the day-hill background the brighter signs showed an advantage.

There were 2 types of responses to the relative sign brightnesses with day backgrounds, represented by a knee or U shape in the curves. This may represent 2 characteristic responses for different people, i.e., 2 "population stereotype" responses. On the other hand, the same people may respond sometimes one way and sometimes the other; in certain cases the responses were of both types for the same person. This double response may indicate 2 factors, one or the other of which may dominate the response of the subject at a given moment. In the case of the intermediate background these 2 appeared to be equally frequent. The factors of letter-to-sign and sign-to-background brightness may affect these 2 opposite response patterns. This question is being investigated further, along with the general question of the effect of letter brightness and letter-to-sign brightness ratio.

ACKNOWLEDGMENT

The research reported in this paper was made possible by a contract with Minnesota Mining and Manufacturing Co.

REFERENCES

1. Forbes, T. W., Snyder, T. E., and Pain, R. F. Traffic Sign Requirements: I. Review of Factors Involved, Previous Studies and Needed Research. Highway Research Record 70, p. 48, 1965.
2. Forbes, T. W., Snyder, T. E., and Pain, R. F. A Study of Traffic Sign Requirements: II. An Annotated Bibliography. Michigan State Univ., East Lansing, Aug. 1965, 85 pp.
3. Forbes, T. W. Predicting Attention-Gaining Characteristics of Highway Traffic Signs—Measurement Technique. Human Factors, Vol. 6, No. 4, pp. 371-374, 1964.

Appendix

AVERAGE BRIGHTNESS (FOOTLAMBERTS) OF SIMULATED SIGNS, LETTERS, AND BACKGROUNDS

Object	Day-Snow	Twilight I	Twilight II	Intermediate	Day-Hill	Night 2
Sign 1	1.70	0.53	0.15	1.79	2.04	2.34
2	1.14	0.32	0.12	1.13	1.15	1.14
3	0.97	0.25	0.09	0.99	1.06	1.00
4	0.70	0.17	0.06	0.64	0.68	0.64
Background	2.31	0.63	0.16	0.75	Sky 2.70 Hill 0.19	0.09
Letters	6.55	3.34	1.54	6.59	7.14	7.34

BRIGHTNESS RATIOS: SIGN/BACKGROUND AND LETTER/SIGN

Object	Day-Snow	Twilight I	Twilight II	Intermediate	Day-Hill	Night 2
Sign/Background						
Sign 1	0.74	0.84	0.94	2.39	1.52	24.89
2	0.49	0.51	0.75	1.51	0.86	12.13
3	0.42	0.40	0.56	1.32	0.79	10.61
4	0.30	0.27	0.35	0.85	0.51	6.81
Letter/Sign						
Sign 1	3.80	6.30	10.27	3.68	3.50	3.14
2	5.74	10.44	12.83	5.83	6.21	6.44
3	6.75	13.36	17.30	6.66	6.73	7.36
4	9.36	19.65	27.50	10.30	10.50	11.47