Principles of Winter Tire Studs

W. PETER MILLER, II, Director of Engineering, Studebaker Corp.

The most recent approach to safe winter driving is the studded winter tire, consisting of a number of small rivet-shaped units scientifically arranged in the tread pattern of a tire. Each unit protrudes radially approximately 0.040 to 0.060 in. to provide a gripping action on ice during stopping, traction and cornering.

As the tire wears so should the tire stud. This is a critical factor in the concept. To maintain the required protrusion it is necessary to use a very wear-resistive material. It has been found that tungsten carbide of a specific compound will meet this requirement.

•SINCE the introduction of the studded winter tire in North America, engineers have been increasing their knowledge regarding the related concepts and principles necessary to obtain the results expected of the product. Approximately three years before they became available here, tire studs had been used to improve traction, stopping, and cornering on ice in Scandinavia. Little was known as to why or how these results were obtained. The information available indicated that marked improvements were being obtained over previous methods that integrated a device within the tread pattern of the tire.

This new approach consists of inserting within the tread of the tire a hard metal unit capable of matching the wear rate of the tire itself. Allowing this unit to protrude a specified amount beyond the tread surface creates enough gripping action on ice to improve substantially the stopping, cornering, and traction ability of the vehicle. It is most important to maintain this protrusion during the normal wear cycle of the tire. The hard metal satisfying this requirement is tungsten carbide.

During the 1963-1964 winter season, the first quantity of tungsten carbide tire studs was test-marketed in the United States. Initially it was thought that something so small and simple in appearance could not possibly be complex. However, this is not the case. Many aspects must be considered to obtain maximum results. Neglect of the fundamental principles of studded tires greatly affects their performance.

At present, tungsten carbide is the accepted material for tire studs in both Europe and North America. However, continual research is being conducted by many organizations to find other materials that will function equally well, if not better, as a traction device on ice.

BASIC CONCEPT

Throughout the history of tires there have been many developments in the line of anti-skid devices for winter driving. Many of the approaches were based on various materials being cured in the tread pattern, which would remain flush to the tread surface during the normal life of the tire. The principle involved in this case was a protrusion effect that occurred when the tires were subjected to the forces created by stopping, cornering, and accelerating conditions.

Another development was a hardened steel unit which, when new, protruded beyond the tread surface of the tire to provide the necessary biting action into the ice. However, the rubber would soon outwear the steel, with the result that the steel became

Paper sponsored by Ad Hoc Committee on Studded Tires and presented at the 46th Annual Meeting.

flush to the tread surface. The advantages present during the protrusion period were much greater than those obtained as the flush condition approached.

The protrusion principle involved in the tire stud as it is known today is primarily a function of the insert. This is one of the most important factors to be considered. As mentioned earlier, when the stud is properly seated in the tread portion of the tire, there must be compatibility between the wear rate of the tire and of the tire stud. If the material of the insert is unable to satisfy this requirement, the principle will not work satisfactorily.

Extensive testing shows that a properly compounded tungsten carbide, one of the hardest materials made by man, has a wear rate which can be controlled to match that of a tire. One basic problem, however, must be taken into consideration: the varying rates of tire wear. The following factors contribute to this wear variance: rubber compound, tread pattern (open or closed design), tire construction (flex rate), type tire (winter, highway or truck), weather conditions, type road surface (new, used, materials) and driving conditions (stops, starts, curves, straight-a-ways, and speeds). Because of these factors, one grade of tungsten carbide alone will not satisfy all the conditions; consequently, several grades are presently being used to satisfy the various requirements. To clarify this point, consider a tire stud with an insert designed to match the wear rate of a first line winter tire. This same tire stud would not match the wear rate of a lesser grade of tire which in many cases differs as much as 5,000 mi in its expected life-span. In such a situation the tire would wear faster than the tire stud. The protuberance of the stud beyond the tread surface would increase. The greater the increase of this distance, the greater the possibility of the tire stud being ejected from the tread pattern. This is due to increased forces which result as the unit contacts the road, leading to a knocking over action rather than its normal radial movement.

The reverse of this would be a fast wearing tire stud placed in a tire that is more resistant to wear. In this case the stud would wear at a faster rate than the tire. Within three to five thousand miles, depending on the wear rate factors, the tire stud would become flush to the tread surface. As the flush condition is approached the effectiveness is reduced. Therefore, it is extremely important to match the proper tungsten carbide grade to the tire. If two winter driving seasons—approximately 10,000 mi or more—are to be obtained from a studded tire, a compatible wear rate between the tire and the tire stud must be maintained.

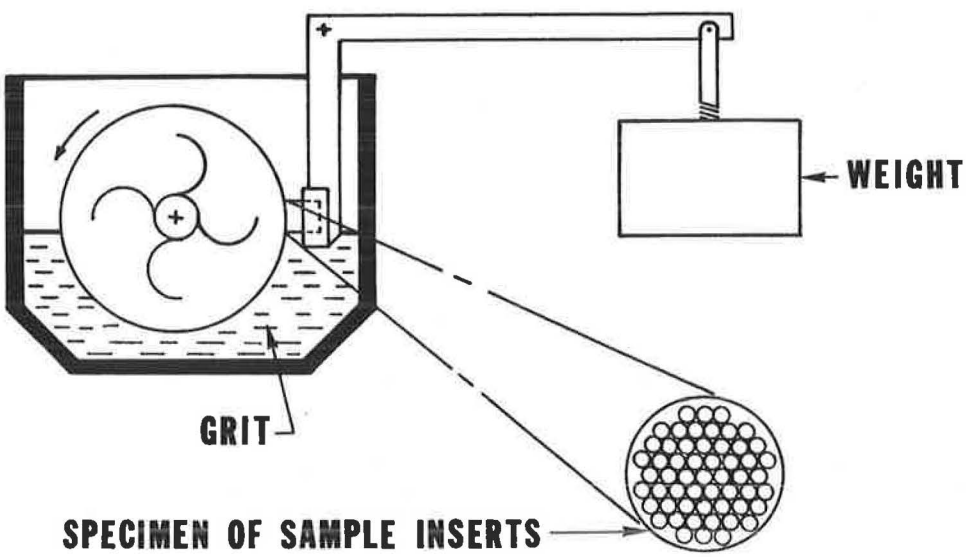

Figure 1. Wear rate tester.

It is necessary to conduct many miles of road testing to establish grades of tungsten carbides. As the results are obtained, they are correlated with a laboratory method of determining the wear rate of the insert. A common procedure uses a Riley Stoker machine (Fig. 1). Here a cluster of inserts is arranged in a 1-in. diameter specimen which, under controlled conditions, is subjected to a rotating wheel in an abrasive grit (1). At the end of the test, the penetration depth of the sample is carefully measured. The deeper the penetration, the less wear resistant the material. The range of penetration depth establishes the wearing grade of the material from which the inserts were manufactured.

Specifications have been established for three grades of tungsten carbide. Two of the three grades are presently being used in the majority of the cases. Quality control procedures are closely followed to insure that the tungsten carbide manufactured meets the proper wear rate requirements.

COMPONENT PARTS OF TIRE STUD

A typical tire stud is made up of two basic parts. The outside part is called the stud body or jacket, and usually consists of one, two or more flanges. Figure 2 shows a single-flange tire stud. The purpose of the flange, or flanges, is to retain the stud in the specially prepared tread of the tire. Figure 3 shows the size of the hole designed into the tread area before insertion and also a single-flange tire stud seated in the tread. Because of the size of the tire stud as compared to the size of the hole, the rubber around the stud exerts compression on the jacket portion, thus retaining the stud in the tire during normal service.

There have been many jacket designs, and a wide range of jacket materials such as plastic, nylon, aluminum, and steel has been used.

When considering the material to be used for the jacket, it is important to investigate the heat transfer properties involved. Under normal driving conditions, tempera-

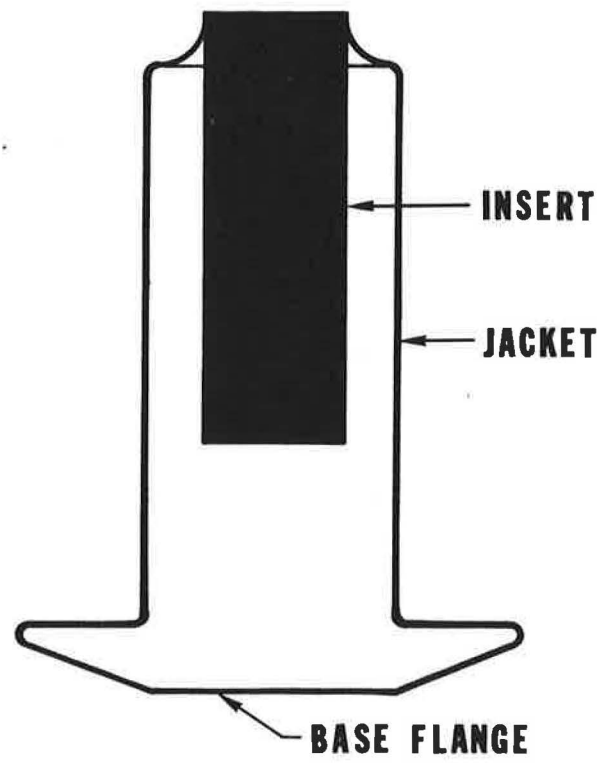

Figure 2. Single-flange tire stud.

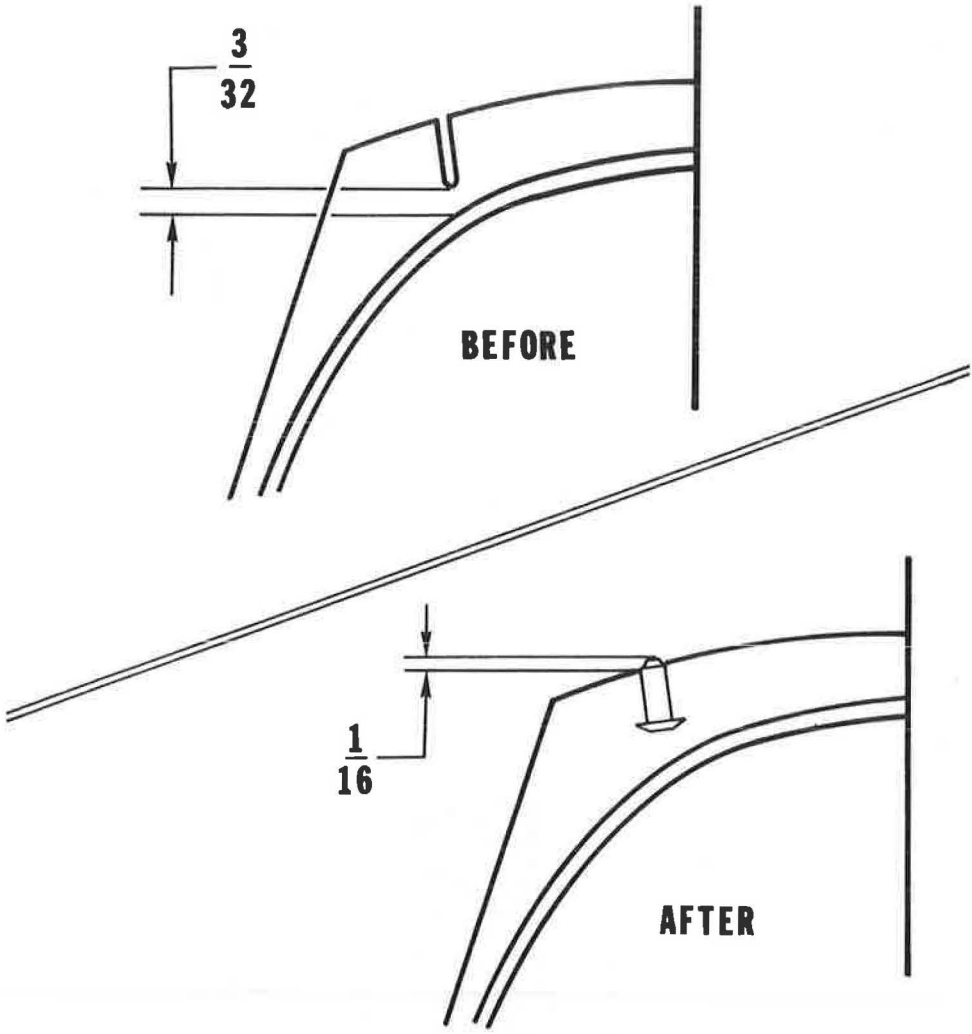

Figure 3. Tire tread before and after insertion of stud.

tures in excess of 400 F have been recorded (2). This heat, if dissipated readily through the jacket, would be detrimental to the rubber in the immediate area, thus affecting the retention of the stud. Consequently, the steel jacket has been very successful in controlling this problem under extreme driving conditions. It absorbs a certain amount of the heat and at the same time dissipates a limited amount of heat to the surrounding rubber. However, the amount dissipated is not enough to affect retention. Also, the termal coefficients of expansion of the two materials, tungsten carbide and steel, are such that under severe conditions the heat generated does not affect the ability of the jacket to retain the insert, providing there is sufficient bond to begin with.

INSERT RETENTION

During the manufacturing process of the winter tire stud, the insert must be securely seated in the jacket. This is a function of the manufacturing process involved in assembling the two component parts. There have been instances in which, during normal service of the studded tire, the insert has been released from the jacket of the stud. When this occurs the result is an inoperable unit. Because of this, many rubber com-

panies have specified that the bond of the insert-to-the-jacket must meet a minimum requirement. Specifically, the force required to dislodge the insert from the jacket must be at least 400 lb. This is usually tested by removing the back portion of the tire stud, thus exposing the insert; force is then applied, with a hardened pin the diameter of the insert, and recorded until the bond is broken.

TIRE STUD LENGTH

It was mentioned previously that tire studs are considered for a wide range of tires. This may include heavy truck, light truck, second and sometimes third line winter designs, highway designs and retreaded tires of the same combinations. This variety requires that various conditions be taken into account when developing the proper length of tire stud to be used for a specific tire.

When engineering a tire stud to a specific tread pattern, a good rule of thumb is to maintain $^3/_{32}$ in. of rubber from the bottom of the base flange to the top of the carcass (Fig. 3), the carcass being that portion which consists of the fabric plys. This cushion of rubber improves the resiliency of the stud and provides sufficient protection against damage to the carcass.

When considering retreaded tires, the $^3/_{32}$-in. rubber gage is the distance between base flange of the tire stud and the buff line above the carcass. Experimentation has established that if the base flange of the tire stud is located directly on the buff line, it will result in a possible separation of the retread portion from the original casing. To prevent this separation, retread engineers have developed a studded tire to accommodate the proper length mold pin. Testing of studded retread tires has given excellent results. There is no effect, whatsoever, on the life or safety of the tire when it is properly studded.

REACTION OF STUDS IN TIRES

We have discussed the various components of the tire stud, including the design concepts that have been applied to the jacket; the reasons for precise control of the insert material; the retention of the insert in the jacket; and the length of the stud vs the particular tire in which it is inserted. Attention will now be directed to the various conditions encountered after the stud has become an integral part of the tire.

The amount of stud protrusion beyond the tread surface of the tire is directly related to the retention of the stud in the tire. Testing has shown that the protrusion should be in the general area of 0.040 to 0.060 in. This is referred to as the optimum operating zone (Fig. 4). Consequently, it has been necessary to develop a length of tire stud that, when seated properly in the tread, has a protrusion in this zone. Because of the various rubber gages and type tires being considered, a wide range of hole depths in the tread pattern is necessary. As a result of this, plus the requirement previously discussed (that of the necessary rubber gage between the base flange and the top of the carcass and/or buff line), the hole in the tire is an established feature requiring studs of different lengths to be designed to meet it. There are roughly five or six standard hole depths to cover all studded winter tires. A complete line of tire stud lengths is available to match these various hole depths.

In developing a stud length to satisfy the protrusion requirement, it is necessary to consider not only the hole depth but the rubber gages as well. It would be a simple matter to add 0.050 in. to the hole depth to obtain a proper stud length for the optimum operating zone; however, this is not the case. As the depth of the hole increases, the length of the tire stud required increases at an increasing rate (Fig. 5). This is primarily due to the various rubber gages involved. As the gages become thicker, an increased settling action occurs during the initial service of the unit, requiring an additional amount to be considered in the overall length of the tire stud.

A typical wear pattern of tire studs shows that studded tires picked at random from production had an average stud protrusion beyond the tread surface of the tire of approximately 0.070 in. In a short time the tire studs settled to a protrusion of 0.040 in. This height represents the stud length/hole depth relation developed by the engineer. The remainder of the curve represents a typical wear pattern over a distance of 8,000

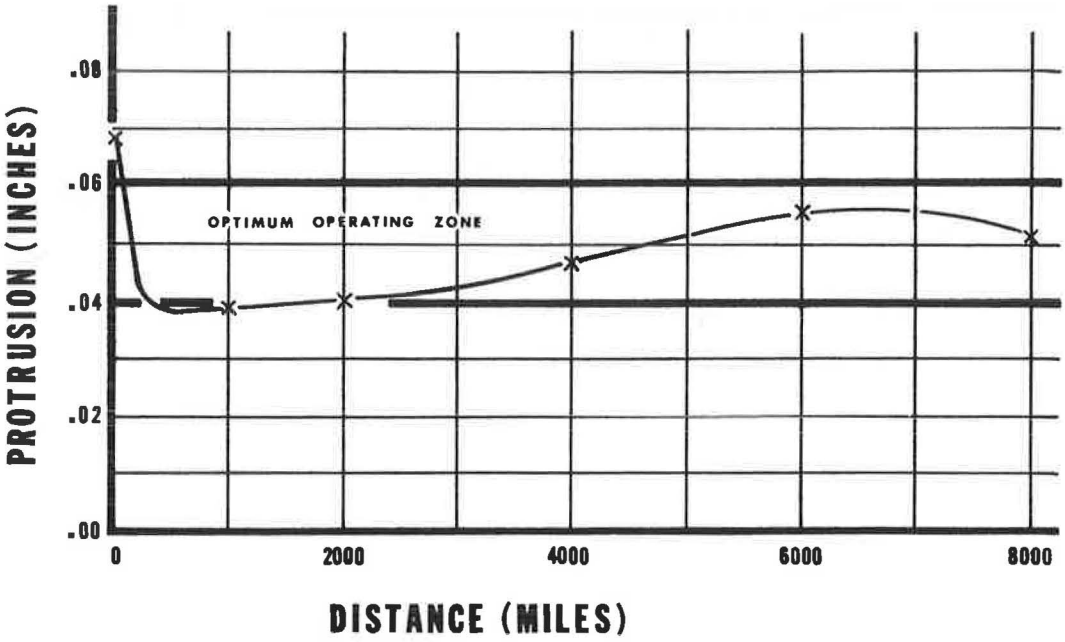

Figure 4. Typical wear pattern, single-flange tire stud.

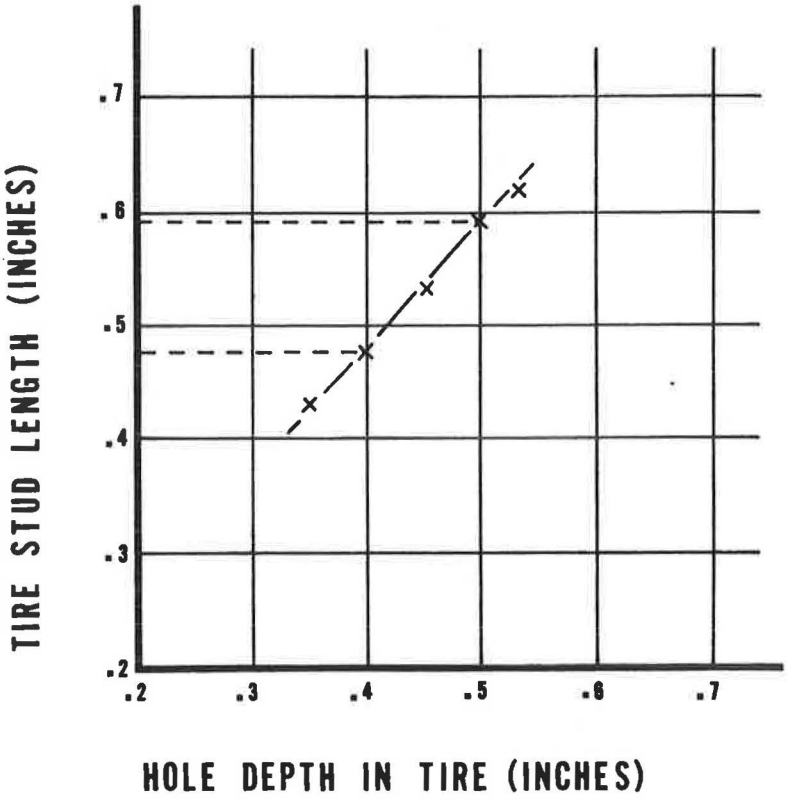

Figure 5. Tire stud length vs hole depth in tire.

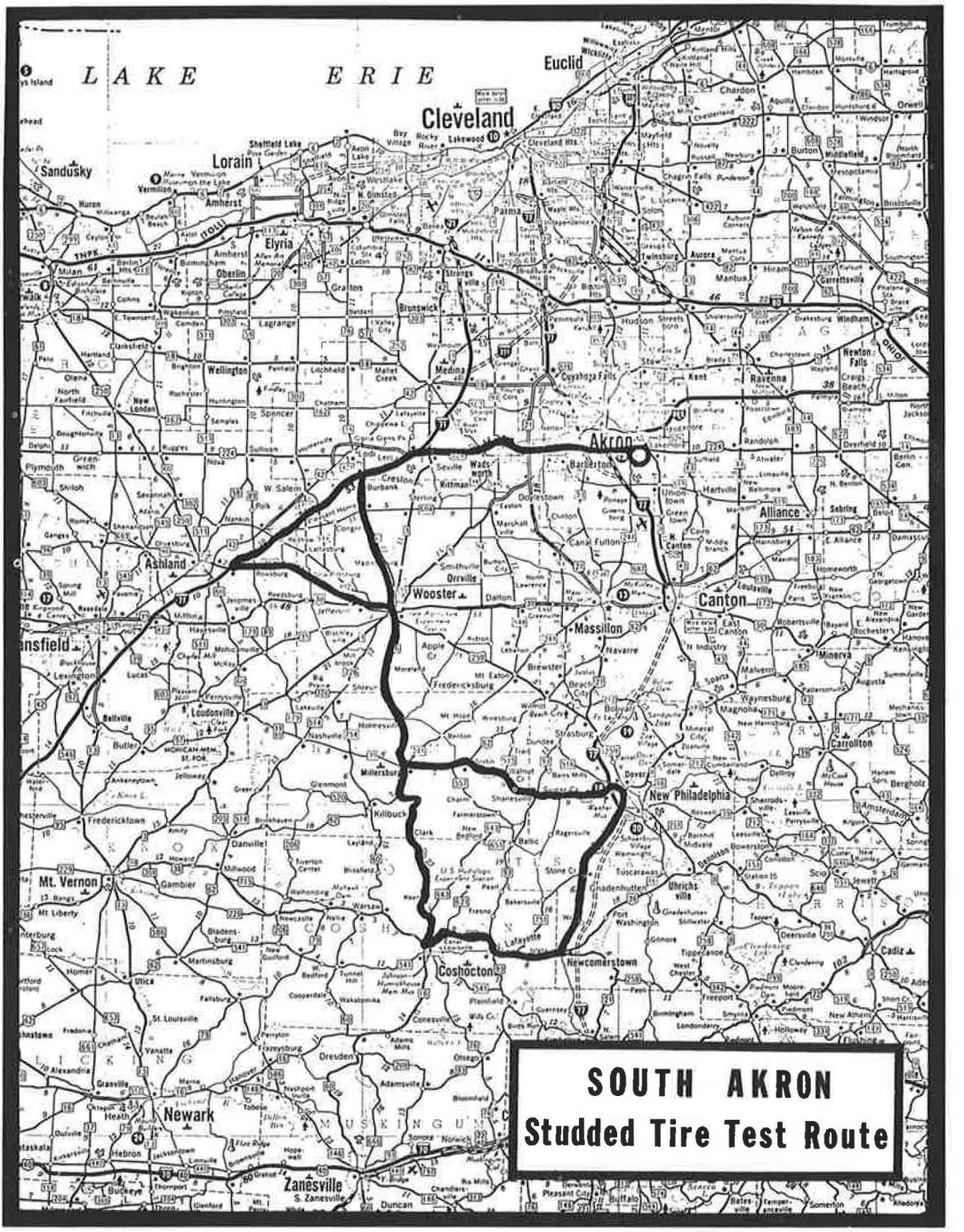
LAKE ERIE
Euclid
Cleveland
Lorain
Sandusky
Amherst
Elyria
Oberlin
Parma
Medina
Akron
Alliance
Ashland
Wooster
Canton
Massillon
Mansfield
Mt. Vernon
Newark
Zanesville
Coshocton
Newcomerstown
New Philadelphia
SOUTH AKRON
Studded Tire Test Route

Figure 6.

mi, using a test route selected to simulate normal driving conditions. Figure 6 shows the actual test route used. There is a peaking action around 6,000 mi, and then the protrusion begins to taper off. Throughout the entire curve the tire studs remained in the optimum operating zone. There would be very little, if any, difference in the performance of the studded tires at 8,000 mi as compared to 4,000 mi.

BREAK-IN PERIOD

During the initial life of the tire stud a settling action takes place and the rubber begins to envelop the shape of the jacket. Immediately after the insertion, the rubber merely bridges the distance from the flange to the shank of the tire stud (Fig. 7). The retention of the stud in the tire is not at its maximum until the rubber around the stud completely envelops the jacket. Pull tests have required in excess of 60 lb of force to extract the stud from the tire tread.

To insure maximum retention of the tire stud, a break-in period of 50 mi at speeds less than 50 mph is recommended. This will allow the stud to seat itself in the tire properly before being subjected to severe driving conditions. Tests have shown that actual settling of the tire stud to the proper protrusion occurs under 25 mi; however, a distance of 50 mi is recommended for complete adjustment of the surrounding rubber to take place.

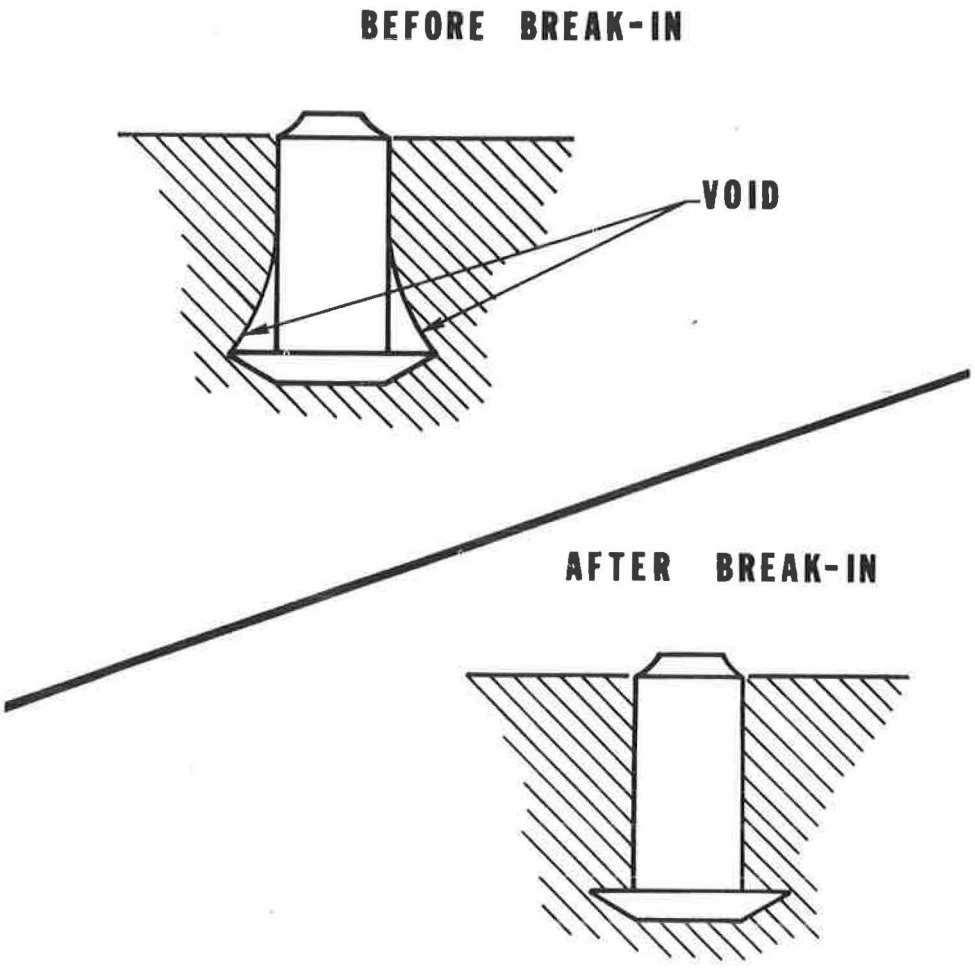

Figure 7. Tire stud before and after break-in period.

PROPER TESTING PROCEDURES

The test route, from which the results of the wear pattern (Fig. 4) were obtained, closely simulated that of normal driving conditions, which would be on either dry or wet pavements cleared of ice and snow. Therefore, wear rate testing was conducted on bare pavements.

To obtain an accurate account of the wear rate of the tungsten carbide or similar material inserts vs that of the tire, it is important to use a proper test route. Exposure of tires to testing on a straight throughway type of condition results in what is termed a slow-wear tire test. That is, the rubber in the tires wears away at a slower rate than it would if subjected to in-town conditions such as stopping, starting, and cornering. Basically, there are test routes that are slow-wear tire tests and test routes that are fast-wear tire tests. Further investigations have shown that the wear rate of the tire stud reacts in exactly the reverse manner. The slow-wear tire test is a fast-wear tire stud test, and a fast-wear tire test is a slow-wear tire stud test. It follows, therefore, that to get a true relationship of the wear rates, the studded tire should be evaluated on a test route consisting of a composite of throughway type driving which is typical on turnpikes, highways, and expressways and in-town type driving which includes stopping, starting and turning. Only under these conditions can the proper wear rate relationship be established. For example, studded tires tested 100

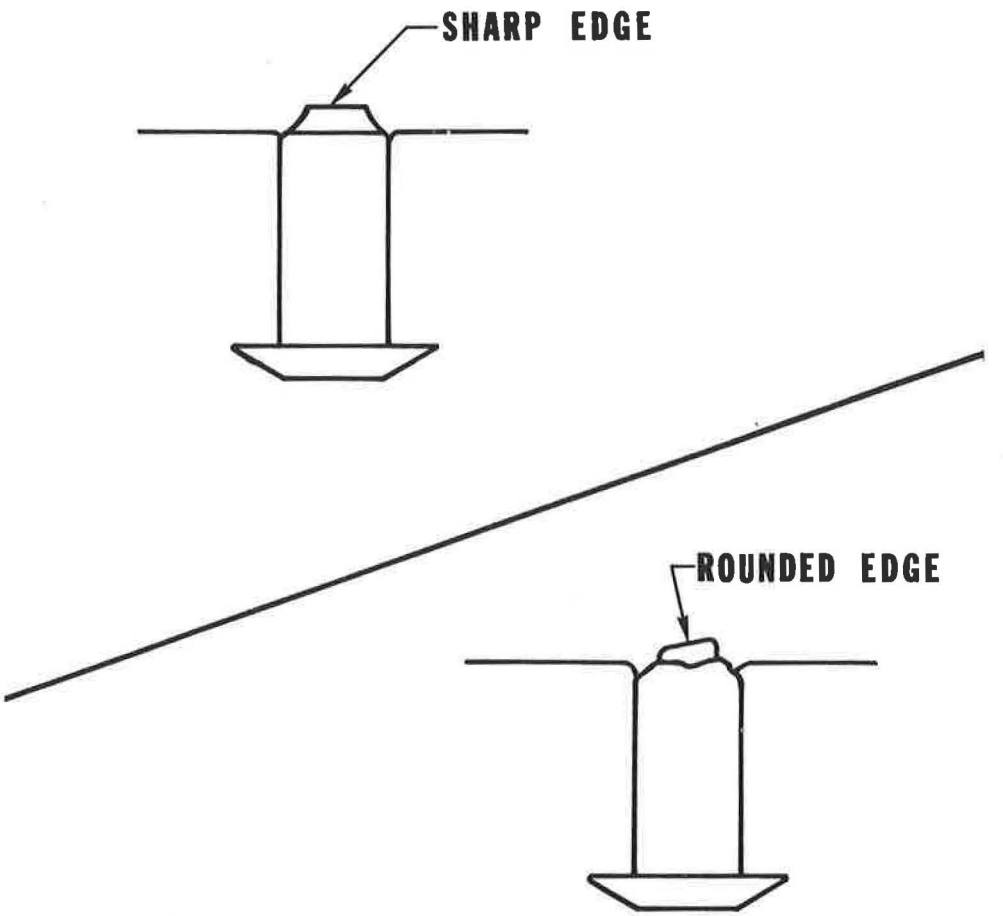

Figure 8. Effect of rounding action on tire stud.

percent of the time on a road such as the Pennsylvania Turnpike would soon have their studs flush to the tread surface.

The tires were subjected to a slow-wear test, and the tire studs subjected to a fast-wear test. After approximately 3,000 to 5,000 mi, the performance of the tire studs on ice is greatly reduced.

PERFORMANCE

In the new condition, tire studs have a squared-off edge at the tip of the insert. As they are subjected to service, a rounding action takes place (Fig. 8). The period of time it takes to have the sharp edges rounded off is a function of several factors including the roads and the driving conditions. This rounding action occurs very quickly in the life of a tire stud, and there is a very slight reduction in performance after the sharp edges are worn off. It stands to reason that a sharp edge could bite into ice much better than a rounded edge. After this initial rounding action takes place, the performance of the studded winter tire remains constant throughout the remainder of its useful life. Later, an angled wear occurs on the insert. The degree of this type of wear pattern is a function of the stability of the stud in the tire.

ROTATION VS RETENTION

When the stud is well within its wear pattern, a direction of wear on the insert is established. Even if the insert wore evenly on all sides, there would still be a possibility of rotation of the unit in the hole, which in turn would have a slight effect on the retention factor. However, inasmuch as the insert wears off at an angle (Fig. 9), its direction throughout its useful life is established. Consequently, organizations such as the American Automobile Association have recommended that when studded winter tires

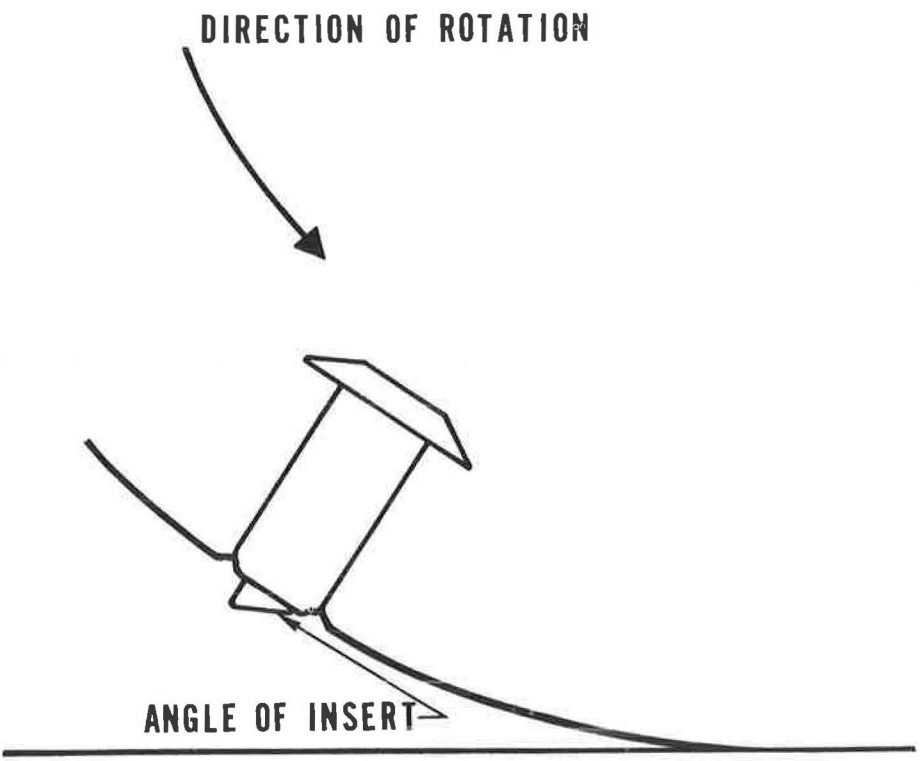

Figure 9. Effect of direction of rotation on angle of insert.

are removed at the end of the season, the direction of rotation be indicated on the tire. This allows the tire to be replaced at the beginning of the next season with the same direction of rotation. If the tire is reversed, the normal angle of wear established by the insert would oppose the wearing forces applied as the insert passes through the contact zone on the pavement; the stud would eventually be forced to rotate 180 deg to reassume its normal wear position, and this could have a slight effect on retention.

When designing a tread pattern for tire studs, it is recommended that a sufficient supporting element of rubber be provided to hold the stud. This will largely eliminate the angle of wear. A rule of thumb would be, the less the support, the greater the wear angle.

ABRASION FACTOR

During service, the studded tire is subjected to road grit and sand which create a wear factor on both the tire stud and the surrounding rubber. Road grit and sand work their way between the material of the jacket and the rubber of the tire. With the stud flexing radially in the tire several times a second at high speeds, the sand and grit act as an abrasive to both the rubber and jacket material. Later, the studs become somewhat loose in the tread as a result of this abrasion. This is a normal reaction, and it occurs faster in certain parts of the country than in others, largely because of the various road compositions involved. Pull tests on loosened studs indicate that there is still sufficient retentive force present to insure adequate retention of the studs in the tire.

When a stud becomes extremely loose it has a tendency to kick over when striking the pavement, thereby escaping the normal wear it received when it was a stable unit. Because of this, the stud protrusion increases until the external forces resulting from striking the road eject the unit. Testing has shown that early ejection results from extremely severe driving conditions, i.e., conditions so severe that elements from the tread pattern of the tire are also thrown. These conditions are very unsafe for both the tire and the tire stud. Under normal driving conditions it is common to obtain 14,000 to 19,000 mi of wear before there is any serious loss of studs. With conditions such as these, the studded tire provides top performance throughout its useful life.

NEW DEVELOPMENTS

Research and development continue the search for an improved method of providing safe driving on ice. Numerous anti-skid devices have already been developed, some more familiar than others, including chains, coils of wire, shredded wire, walnut shells, wire combs, and many others. With the exception of tire chains, which are applied on the outside of the tire when needed, these items are molded into the tread pattern during the curing process of the tire. It is assumed that as the stopping and accelerating forces are applied enough of the material will be exposed to improve the overall performance of the vehicle on ice. Whereas the foregoing devices, with the exception of tire chains, are usually flush with the tread pattern of the tire, the tire stud is applied after the tire is cured and maintains a protrusion throughout its useful life.

Since the introduction of tungsten carbide as a material able to match the wear rate of a winter tire, extensive research has been conducted on high alumina ceramics and on high wear resistant materials such as titanium carbides and molybdenum. These experimental materials are being evaluated on the basis of the protrusion principle.

A primary reason for investigating various wear-resistant materials is the cost and availability of tungsten carbide. Since the acceptance of the winter tire stud, there has been a severe drain on the supply of tungsten carbide and its cost has increased. Therefore, research will continue on similar materials to find one which matches the wear rate of a tire.

New developments have not been restricted to the field of tire studs. A major transition is presently taking place in the tire industry. Several years ago when tire studs were introduced in this country, the tire manufacturers quickly converted existing equipment to provide the necessary locations for inserting studs. Today, practically

every rubber company provides from one to three complete lines of tires that can be studded if so desired. Also, the new winter tires being developed are designed to incorporate the tire studding patterns. Previously, this was merely an afterthought of existing tread designs.

A final development is the equipment required to insert the studs in the tire. This continues to be one of the greatest problems from the standpoint of both the manufacturer and the dealer.

Tire studs are inserted after the tire is cured, either at the manufacturing facility or in the local gas station. A wide range of equipment is required to satisfy the various levels. Each year new developments have been introduced to provide the additional speed and efficiency during the inserting process. Although significant advances have been made, there is still much room for improvement.

CONCLUSION

In conclusion, we have seen that the principles involved in a studded winter tire warrant careful consideration if maximum performance of the product is desired. These principles include: (a) the jacket of the tire stud, its design and the materials used; (b) the insert, which consists of a wear-resistant material capable of matching the wear rate of the tire; (c) the bonding of the insert to the jacket; (d) establishing the proper length tire stud; (e) the break-in period; and (f) the driving conditions necessary to result in a typical wear pattern for the studded tire.

All of these must be carefully coordinated to maintain the optimum operating zone, that of 0.040 to 0.060 in. which in turn results in a highly efficient studded winter tire. Early results from the field, in many cases, have shown disregard for one or more of the foregoing principles. For example, the use of a wrong length stud for the tire or failure to follow the proper carbide recommendation would be enough to produce an ineffective studded tire in a very short time. The various manufacturers of studded tires

Figure 10. Shaded areas show states, except Alaska, in which studded auto tires can be used (Jan. 1, 1967).

are attempting to educate the field as quickly as possible. The nature of the learning situation involved and the number of people to be reached have made this a very difficult job. Through the combined efforts of tire and tire stud manufacturers, future availability of a properly studded tire will be obtained as easily as the right spark plug for a car.

In 1964 approximately 3 million tire studs were marketed in the United States and Canada. In 1965 this became 30 million, and by 1966 close to 300 million tire studs were marketed. Figure 10 shows the states, except Alaska, in which studded tires can now be used.

It has been estimated that for the 1966-1967 winter season this figure should be at least double, making a total market of roughly 600 million tire studs. With a growth such as this, it is extremely important to insure that the principles of winter tire studs are known and adhered to. When a driver is informed that he has more than twice the traction and can stop in at least half the distance on ice when using studded winter tires, he must have exactly what it takes to achieve this performance (3).

REFERENCES

1. Cemented Carbides Producers Assoc. A Procedure for the Determination of Abrasive Wear Resistance of Cemented Tungsten Carbides. P-112, Sept. 1960.
2. Studs: New Data on Heat. Modern Tire Dealer, July 1966, pp. 51, 53.
3. Studded Winter Tire Test Report—Clintonville, Wisconsin (1963). Goodyear Tire & Rubber Co., Akron, Ohio.