Toward a Solution for the Optimal Allocation of Investment in Urban Transportation Networks

JIN-JERG WANG, ROBERT R. SNELL, and MONROE L. FUNK
Respectively, Graduate Research Assistant, Associate Professor, and Assistant Professor, Civil Engineering Department, Kansas State University

This paper demonstrates the application of a discrete version of the maximum principle to the problem of optimal investment in a transportation network. Network investment problems that include nonlinear relationships between travel time, traffic volume, and investment are considered. The technique determines the optimal investment policy in the network and on this basis assigns a given trip demand to the improved network. The objective is to provide an investment policy that will cost least to construct and operate.

•THE economic analysis of a transportation network provides valuable guidance in developing a comprehensive, long-range transportation plan which, as concluded by Zettel and Carll (1), is the basic objective of a transportation study. Being part of the public services and competing for the use of limited resources, the transportation system should be built and operated economically, while at the same time it should meet the standards and goals of the community in order to promote growth and meet the needs of the economic activities. Specifically, the objectives of a transportation system have been summarized (2) as:

1. Provide a means for moving people and goods safely, freely and economically;
2. Provide a choice of mode of travel;
3. Make the city a more attractive place to live; and
4. Provide the means for fulfilling the travel needs and desires of the urban population within their ability to pay.

Theoretically, an optimal transportation system which best fits the economic and social objectives would be based on criteria that reflect these objectives. However, this evaluation would be very difficult if it were to be done quantitatively.

Certain aspects of transportation system evaluation are subject to quantitative analysis, such as the addition of capacity, improvement of level of service, and optimal allocation of funds for these purposes. The problem of adding capacity and improving the level of service of an urban street network has been dealt with by several researchers. In 1958, Garrison and Marble (3) presented a linear programming formulation for the analysis of network improvement. Travel cost for each link was assumed to be constant and the investment was assumed to increase the capacity linearly. The objective was to minimize the sum of the investment and travel cost subject to constraints such as flow balance, budget, and capacity limits. The simplex algorithm was employed to seek the optimal solution.

Carter and Stowers (4), in 1963, again utilized linear programming to formulate a model for funds allocation for urban highway system capacity improvement. The basic

Paper sponsored by Committee on Transportation System Evaluation and presented at the 47th Annual Meeting.

formulation was the same as that of Garrison except that each link was represented by two arcs, one with free flow capacity and normal operating cost, the other with higher operating cost (due to congestion) and a capacity equal to the difference between possible and practical capacity. The ratio of the capacities of these two arcs was kept constant as the capacities were improved.

In 1964, Roberts and Funk (5) developed a linear programming model for the problem of adding links to a transportation system. The locations of possible additional links in the system were first decided. In seeking the optimum, the additional link was either completely built or not built at all. If the link were added, the cost was included in the objective function. If it were not added, flow on the link was blocked. In this formulation an integer programming technique was used. The paper also suggested a possible application of dynamic programming in treating the stage-wise construction problem. As a result, in 1966, Roberts et al (6) combined the use of linear programming and dynamic programming techniques to solve a stage-wise link addition problem.

Hay, Morlok, and Charnes (7) developed a model for optimal planning of a two-mode urban transportation system. A two-mode system, auto transport and public transit, was to be built in an urban corridor. The auto roadway capital cost was linearly related to capacity and speed. Transit speed was fixed with the capacity linearly related to capital cost. The length of the transit route was also assumed fixed. The choice of mode was linearly related to the travel time ratio between road and transit. Again, the linear programming technique was used to formulate the problem and seek the optimum. In this formulation, the travel time was excluded from operating cost and was treated as a constraint to reflect the minimum level of service desired and the maximum speed obtainable. For a true optimum, it was necessary to change the length of the transit route and run the program several times.

Distinct from the linear programming type models, Ridley (8), in 1965, developed a method for seeking the optimum investment policy to reduce the travel time in a transportation network. The unit travel time was assumed to be decreasing linearly with the investment. It was also assumed that the flow was far below the link capacity. The objective was to minimize the total travel time. Because the travel time was a function of both investment and traffic volume, the objective function was nonlinear in nature. For some special cases, such as no budget limit, fixed traffic volume, fixed investment, and single origin-destination, the formulation can be simplified into a linear programming model. For the general case having budget and travel time constraints, the bounded subset method was utilized to search for the optimum.

HYPOTHETICAL PROBLEM NETWORK

To demonstrate the model to be formulated in this study a hypothetical urban network was created. The network shown in Figure 1 gives the peak hour trip distribution pattern. The network shown can be considered to be one quadrant of a city with the CBD at node (4, 4). Thus all trips originating at the various nodes in the quadrant are destined to the CBD.

The streets shown in Figure 1 that make up the hypothetical urban street network are assumed to have various characteristics. Each street link in the network can have a different free flow travel time and a different coefficient of investment to reflect different construction and right-of-way costs.

The network was divided into two parts by a diagonal line passing through nodes (1, 4) and (4, 1). The lower part, which is adjacent to the CBD, was assumed to be more densely developed than the upper part. Thus it was assumed that the maximum speed attainable would be 60 mph in the densely developed lower half and 70 mph in the less densely developed upper half. These are the maximum speeds used to derive the model constants in the Appendix although they may not be possible from a practical viewpoint.

THE OBJECTIVE FUNCTION AND TRAVEL TIME EQUATION

The objective of the model formulated in this study was to minimize the sum of investment cost and travel time cost. Investment was considered as an independent variable and it was assumed that it could be expressed in terms of dollars per mile. How-

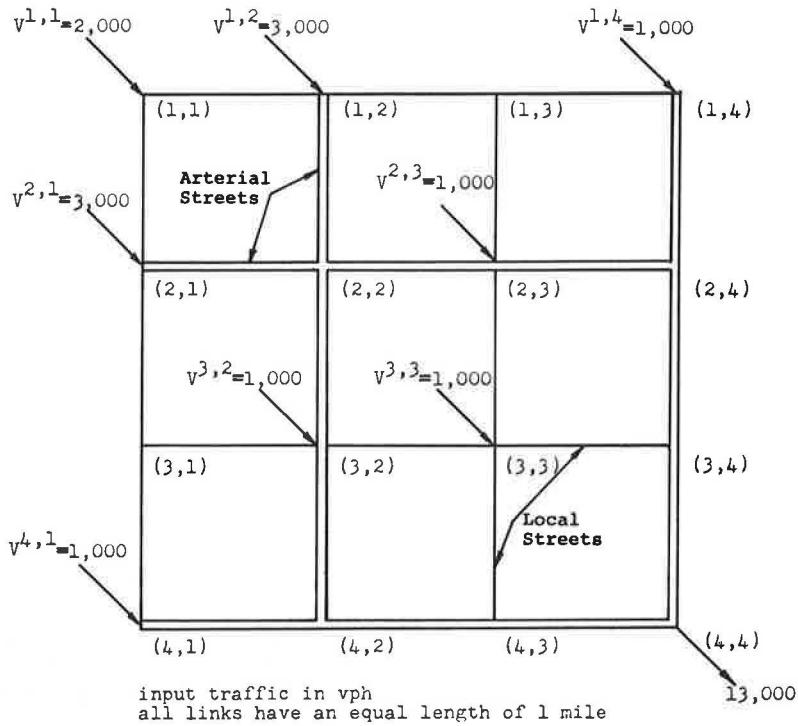

Figure 1. Hypothetical network and peak-hour traffic distribution.

ever, unit travel time was, in general, dependent on traffic volume and roadway conditions.

To express unit travel time as a function of traffic volume and investment, some basic relationships were observed:

1. Unit travel time increased as the traffic volume increased;
2. Unit travel time decreased as the investment increased;
3. Unit travel time had a lower limit (free flow travel time); and
4. With constant travel time, capacity increased as investment increased.

Keeping the basic relationships in mind and further assuming that the free flow travel time is constant for each link, and that traffic volume served is proportional to investment for a constant travel time, an equation of the following form may be hypothesized:

$$t = K_1 + \frac{K_2}{\theta} V \tag{1}$$

where

t = unit travel time (hr/mi/veh);
K_1 = free flow travel time (hr/mi/veh)—the magnitude depends on the maximum speed obtainable or allowed by regulation;
K_2 = coefficient of improvement (dollar-hr/mi^2/veh^2)—its magnitude depends on link location and reflects the difficulty of improvement;
θ = equivalent hourly investment per unit length (dollar/mi/hr); and
V = traffic volume per unit time (veh/hr).

In the case where old facilities exist, the investment should be expressed as:

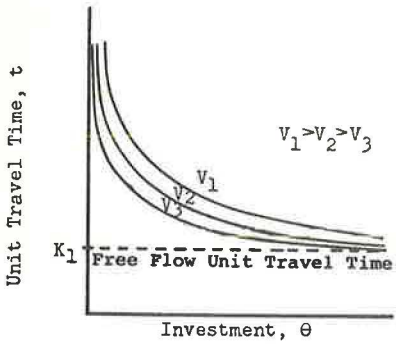

Figure 2. Travel time-investment curve with fixed volume.

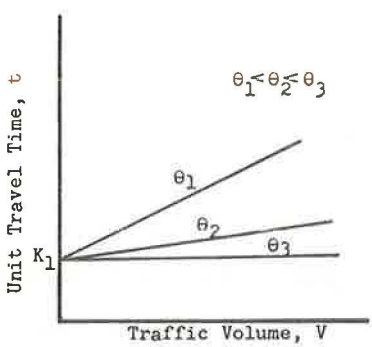

Figure 3. Travel time-volume curve with fixed investment.

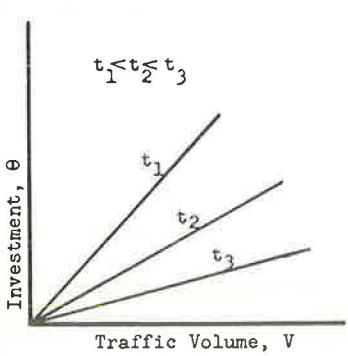

Figure 4. Volume-Investment curve with fixed travel time.

$$\theta = K_3 + \theta' \tag{2}$$

where K_3 (dollar/mi/hr) represents the existing investment and θ' (dollar/mi/hr) is the additional investment

The general form of the unit travel time equation then becomes

$$t = K_1 + \frac{K_2}{K_3 + \theta'} V \tag{3}$$

The characteristics of this equation are demonstrated in Figures 2, 3, and 4.

Letting L be the length of the link and C_t the cost of time, the objective function then becomes

S = link investment + travel time costs

$$S = \theta' L + \left(K_1 V + \frac{K_2}{K_3 + \theta'} V^2\right) L C_t \tag{4}$$

Since the objective function to be optimized is nonlinear, a technique designed to handle this type of function must be employed. Although several such techniques are available, this study utilized a discrete version of the maximum principle (9). The use of the maximum principle to assign trips to an urban street network has previously been demonstrated (10, 11).

FORMULATION OF NETWORK INVESTMENT PROBLEMS

In this paper we shall consider the problem of optimal network investment under various conditions. This requires several model formulations, one of which will be presented here. The other formulations (12) will not be presented here in the interest of brevity; they will, however, be demonstrated by example problems.

Seven investment conditions are to be considered. They can be grouped in two categories as follows:

1. Investment allocation in a network with no existing facilities:
   a. No budget constraint.
   b. Fixed overall system budget.
   c. Fixed budget at each node.
2. Investment allocations to improve a network with existing facilities:
   a. System improvement budget = 0.
   b. No budget constraint.
   c. Upper and lower limit on individual link improvements.
   d. Fixed overall system improvement budget.

In this section the model formulation for the condition of no budget constraint will be derived, which will take care of conditions 1a, 2a, 2b, and 2c listed.

For each of the investment conditions, future traffic demand patterns for the area are assumed to be known. Also assumed as given is the geometric configuration of the network. As stated earlier, the objective is to build (or improve) a transportation network that will accommodate the assumed demand and will cost least to construct and operate. This will be accomplished, in this paper, by searching for the optimal sequence of decision variables.

To facilitate formulation of the model, various assumptions were necessary:

1. No turn penalties;
2. Zone centroids coincide with the nodes;
3. Traffic directions are preassigned;
4. Traffic distribution is fixed;
5. Transportation network can be represented by a rectangularly arranged combination of links;
6. Travel time is the only factor that influences the traffic assignment; and
7. Unit travel time on each link can be expressed as

$$t_j^{n,m} = K_{j_1}^{n,m} + \frac{K_{j_2}^{n,m}}{\theta_j^{n,m} + K_{j_3}^{n,m}} X_j^{n,m} \tag{5}$$

where j = 1, for horizontal links; j = 2, for vertical links; and (n, m) designates the particular node in the network.

Figure 5 shows a basic N x M rectangular network with node (N, M) as the destination and all other nodes as origins. With the input trips at each node assumed to be given, the problem is to find an investment policy under each investment condition such that the total cost is a minimum.

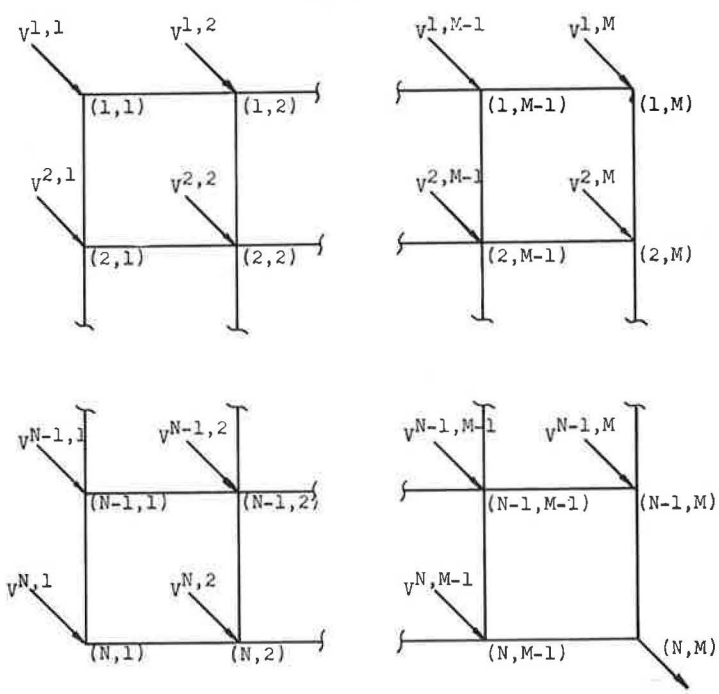

Figure 5. Basic N x M network.

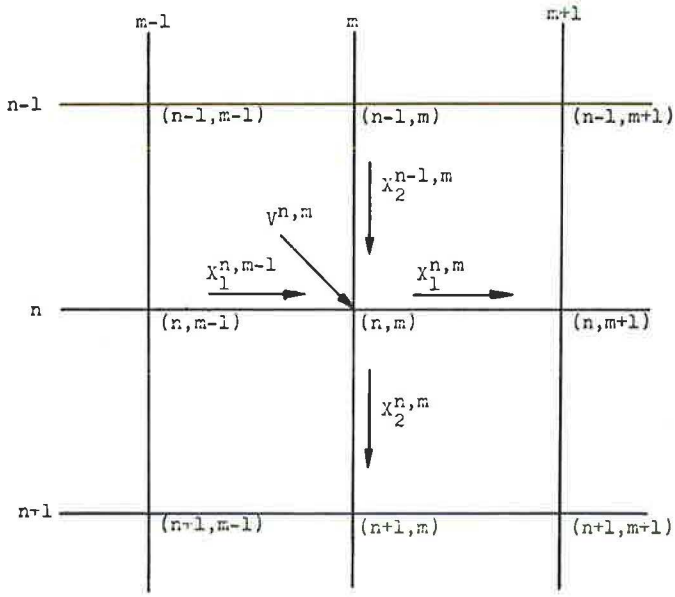

Figure 6. Typical interior node of a rectangular network.

The performance equations for a typical interior node, as shown in Figure 6, were developed as follows:

$$X_1^{n,m} = \left(X_1^{n,m-1} + X_2^{n-1,m} + V^{n,m}\right)\theta_3^{n,m} = AI^{n,m}\theta_3^{n,m} \tag{6}$$

$$X_2^{n,m} = \left(X_1^{n,m-1} + X_2^{n-1,m} + V^{n,m}\right)\left(1-\theta_3^{n,m}\right) = AI^{n,m}\left(1-\theta_3^{n,m}\right) \tag{7}$$

$$X_3^{n,m} = \theta_1^{n,m} L_1^{n,m} + X_3^{n,m-1}, \quad \theta_1^{n,m} \geq 0 \tag{8}$$

$$X_4^{n,m} = \theta_2^{n,m} L_2^{n,m} + X_4^{n-1,m}, \quad \theta_2^{n,m} \geq 0 \tag{9}$$

$$X_5^{n,m} = K_{11}^{n,m} X_1^{n,m} L_1^{n,m} C_t + \frac{K_{12}^{n,m} L_1^{n,m} C_t}{\theta_1^{n,m} + K_{13}^{n,m}}\left(X_1^{n,m}\right)^2 + X_5^{n,m-1}$$

$$= K_{11}^{n,m} AI^{n,m} \theta_3^{n,m} L_1^{n,m} C_t$$

$$+ \frac{K_{12}^{n,m} L_1^{n,m} C_t}{\theta_1^{n,m} + K_{13}^{n,m}}\left(AI^{n,m}\theta_3^{n,m}\right)^2 + X_5^{n,m-1} \tag{10}$$

$$X_6^{n,m} = K_{21}^{n,m} X_2^{n,m} L_2^{n,m} C_t + \frac{K_{22}^{n,m} L_2^{n,m} C_t}{\theta_2^{n,m} + K_{23}^{n,m}}\left(X_2^{n,m}\right)^2 + X_6^{n,m-1} =$$

$$= K_{21}^{n,m} AI^{n,m} \left(1 - \theta_3^{n,m}\right) L_2^{n,m} C_t$$

$$+ \frac{K_{22}^{n,m} L_2^{n,m} C_t}{\theta_2^{n,m} + K_{23}^{n,m}} \left[AI^{n,m} \left(1 - \theta_3^{n,m}\right)\right]^2 + X_6^{n,m-1} \tag{11}$$

where

$$AI^{n,m} = X_1^{n,m-1} + X_2^{n-1,m} + V^{n,m} \tag{12}$$

and

$X_j^{n,m}$ = state variables representing flows from node (n, m), j = 1, 2;

$\theta_j^{n,m}$ = decision variables representing investments on links leaving node (n, m), $\theta_j^{n,m} \geq 0$, j = 1, 2;

$K_{j1}^{n,m}$ = free flow travel time on links leaving node (n, m), j = 1, 2;

$K_{j2}^{n,m}$ = coefficient of investment on links leaving node (n, m), j = 1, 2;

$K_{j3}^{n,m}$ = existing investment on links leaving node (n, m), j = 1, 2;

$L_j^{n,m}$ = link length on links leaving node (n, m), j = 1, 2 where j = 1 for horizontal links and j = 2 for vertical links;

$X_3^{n,m}$ = state variable representing the total investment on horizontal links from node (1, 1) through node (n, m);

$X_4^{n,m}$ = state variable representing the total investment on vertical links from node (1, 1) through node (n, m);

$X_5^{n,m}$ = state variable representing the total travel time cost on horizontal links from node (1, 1) through node (n, m);

$X_6^{n,m}$ = state variable representing the total travel time cost on vertical links from node (1, 1) through node (n, m);

$X_7^{n,m}$ = state variable representing the total investment on both links from node (1, 1) through node (n, m);

$\theta_3^{n,m}$ = decision variable representing the fraction of the vehicles departing node (n, m) on the horizontal link, $0 \leq \theta^{n,m} \leq 1$;

C_t = time cost; and

$V^{n,m}$ = input trips at node (n, m).

The Hamiltonian function at this node is defined as

$$H^{n,m} = Z_1^{n,m} X_1^{n,m} + Z_2^{n,m} X_2^{n,m} + Z_3^{n,m} X_3^{n,m} + Z_4^{n,m} X_4^{n,m}$$

$$+ Z_5^{n,m} X_5^{n,m} + Z_6^{n,m} X_6^{n,m} \tag{13}$$

Substituting Eqs. 6 to 11 into Eq. 13 and taking derivatives with respect to state variables, the adjoint variables are obtained as follows:

$$Z_1^{n,m-1} = \frac{\partial H^{n,m}}{\partial X_1^{n,m-1}} = Z_1^{n,m} \theta_3^{n,m} + Z_2^{n,m} \left(1 - \theta_3^{n,m}\right)$$

$$+ Z_5^{n,m} K_{11}^{n,m} \theta_3^{n,m} L_1^{n,m} C_t + Z_6^{n,m} K_{21}^{n,m} \left(1 - \theta^{n,m}\right) L_2^{n,m} C_t +$$

$$+ 2Z_5^{n,m} \frac{K_{12}^{n,m} L_1^{n,m} C_t}{\theta_1^{n,m} + K_{13}^{n,m}} AI^{n,m} \left(\theta_3^{n,m}\right)^2$$

$$+ 2Z_6^{n,m} \frac{K_{22}^{n,m} L_2^{n,m} C_t}{\theta_2^{n,m} + K_{23}^{n,m}} AI^{n,m} \left(1 - \theta_3^{n,m}\right)^2 \tag{14}$$

$$Z_2^{n-1,m} = \frac{\partial H^{n,m}}{\partial X_2^{n-1,m}} = Z_1^{n,m} \theta_3^{n,m} + Z_2^{n,m}\left(1 - \theta_3^{n,m}\right) + Z_5^{n,m} K_{11}^{n,m} \theta_3^{n,m} L_1^{n,m} C_t$$

$$+ Z_6^{n,m} K_{21}^{n,m}\left(1 - \theta_3^{n,m}\right) L_2^{n,m} C_t$$

$$+ 2Z_5^{n,m} \frac{K_{12}^{n,m} L_1^{n,m} C_t}{\theta_1^{n,m} + K_{13}^{n,m}} AI^{n,m} \left(\theta_3^{n,m}\right)^2$$

$$+ 2Z_6^{n,m} \frac{K_{22}^{n,m} L_2^{n,m} C_t}{\theta_2^{n,m} + K_{23}^{n,m}} AI^{n,m} \left(1 - \theta_3^{n,m}\right)^2 \tag{15}$$

$$Z_3^{n,m-1} = \frac{\partial H^{n,m}}{\partial X_3^{n,m-1}} = Z_3^{n,m} \tag{16}$$

$$Z_4^{n-1,m} = \frac{\partial H^{n,m}}{\partial X^{n-1,m}} = Z_4^{n,m} \tag{17}$$

$$Z_5^{n,m-1} = \frac{\partial H^{n,m}}{\partial X_5^{n,m-1}} = Z_5^{n,m} \tag{18}$$

$$Z_6^{n-1,m} = \frac{\partial H^{n,m}}{\partial X_6^{n-1,m}} = Z_6^{n,m} \tag{19}$$

The original conditions for the state variables are given as

$$X_1^{0,0} = X_2^{0,0} = X_3^{0,0} = X_4^{0,0} = X_5^{0,0} = X_6^{0,0} = 0 \tag{20}$$

The objective function is

$$S = X_3^{N,M} + X_4^{N,M} + X_5^{N,M} + X_6^{N,M} \tag{21}$$

Therefore, by definition, the boundary conditions for the adjoint variables are

$$Z_1^{N,M} = Z_2^{N,M} = 0 \tag{22}$$

$$Z_3^{N,M} = Z_4^{N,M} = Z_5^{N,M} = Z_6^{N,M} = 1 \tag{23}$$

Substituting Eq. 23 into Eqs. 16 to 19, the following equation is derived:

$$Z_3^{n,m} = Z_4^{n,m} = Z_5^{n,m} = Z_6^{n,m} = 1 \quad \text{for all } (n,m) \tag{24}$$

The Hamiltonian function then becomes

$$H^{n,m} = Z_1^{n,m} X_1^{n,m} + Z_2^{n,m} X_2^{n,m} + X_3^{n,m} + X_4^{n,m} + X_5^{n,m} + X_6^{n,m} \tag{25}$$

In order to have S a minimum, the following conditions are necessary:

$$\frac{\partial H^{n,m}}{\partial \theta_1^{n,m}} = 0, \ \theta_1^{n,m} > 0$$

$$\frac{\partial H^{n,m}}{\partial \theta_2^{n,m}} = 0, \ \theta_2^{n,m} > 0$$

$$\frac{\partial H^{n,m}}{\partial \theta_3^{n,m}} = 0, \ 0 < \theta_3^{n,m} < 1$$

when $(\theta_1^{n,m}, \theta_2^{n,m}, \theta_3^{n,m})$ is an interior point, or $H^{n,m}$ = minimum with respect to those $\theta_j^{n,m}$ which are at a boundary point of the constraints.

Substituting Eqs. 6 to 11 into Eq. 25 and taking derivatives with respect to the various decision variables, the following equations are obtained:

$$\frac{\partial H^{n,m}}{\partial \theta_1^{n,m}} = L_1^{n,m} - \frac{K_{12}^{n,m} L_1^{n,m} C_t}{\left(\theta_1^{n,m} + K_{13}^{n,m}\right)^2} \left(AI^{n,m} \theta_3^{n,m}\right)^2 \tag{26}$$

$$\frac{\partial H^{n,m}}{\partial \theta_2^{n,m}} = L_2^{n,m} - \frac{K_{22}^{n,m} L_2^{n,m} C_t}{\left(\theta_2^{n,m} + K_{23}^{n,m}\right)^2} \left[AI^{n,m}\left(1 - \theta_3^{n,m}\right)\right]^2 \tag{27}$$

$$\begin{aligned}\frac{\partial H^{n,m}}{\partial \theta_3^{n,m}} = {} & \left(Z_1^{n,m} - Z_2^{n,m}\right) AI^{n,m} + \left(K_{11}^{n,m} L_1^{n,m} - K_{21}^{n,m} L_2^{n,m}\right) AI^{n,m} C_t \\ & + 2 \frac{K_{12}^{n,m} L_1^{n,m} C_t}{\theta_1^{n,m} + K_{13}^{n,m}} \left(AI^{n,m}\right)^2 \theta_3^{n,m} \\ & - 2 \frac{K_{22}^{n,m} L_2^{n,m} C_t}{\theta_2^{n,m} + K_{23}^{n,m}} \left(AI^{n,m}\right)^2 \left(1 - \theta_3^{n,m}\right)\end{aligned} \tag{28}$$

Taking the derivative of Eq. 28 with respect to $\theta_3^{n,m}$, the following equation is obtained:

$$\frac{\partial^2 H^{n,m}}{\left(\partial\theta_3^{n,m}\right)^2} = 2\,\frac{K_{12}^{n,m}\,L_1^{n,m}\,C_t}{\theta_1^{n,m} + K_{13}^{n,m}}\left(AI^{n,m}\right)^2 + 2\,\frac{K_{22}^{n,m}\,L_2^{n,m}\,C_t}{\theta_2^{n,m} + K_{23}^{n,m}}\left(AI^{n,m}\right)^2 \tag{29}$$

Setting Eqs. 26 and 27 equal to zero and applying the boundary conditions of the decision variables, the values of $\theta_1^{n,m}$ and $\theta_2^{n,m}$ can be obtained from the following equations:

$$\theta_1^{n,m} = \sqrt{K_{12}^{n,m}\,C_t}\;AI^{n,m}\,\theta_3^{n,m} - K_{13}^{n,m} \text{ when } \theta_1^{n,m} > 0 \tag{30}$$

or

$$\theta_1^{n,m} = 0 \text{ when } \sqrt{K_{12}^{n,m}\,C_t}\;AI^{n,m}\,\theta_3^{n,m} - K_{13}^{n,m} \le 0 \tag{31}$$

$$\theta_2^{n,m} = \sqrt{K_{22}^{n,m}\,C_t}\;AI^{n,m}\left(1 - \theta_3^{n,m}\right) - K_{23}^{n,m} \text{ when } \theta_2^{n,m} > 0 \tag{32}$$

or

$$\theta_2^{n,m} = 0 \text{ when } \sqrt{K_{22}^{n,m}\,C_t}\;AI^{n,m}\left(1 - \theta_3^{n,m}\right) - K_{23}^{n,m} \le 0 \tag{33}$$

When both $\theta_1^{n,m}$ and $\theta_2^{n,m}$ are greater than zero, Eqs. 30 and 32 can be substituted into Eq. 28 to obtain

$$\begin{aligned}
\frac{\partial H^{n,m}}{\partial\theta_3^{n,m}} &= \left(Z_1^{n,m} - Z_2^{n,m}\right) AI^{n,m} \\
&+ \left(K_{11}^{n,m}\,L_1^{n,m} - K_{21}^{n,m}\,L_2^{n,m}\right) AI^{n,m}\,C_t \\
&+ 2\sqrt{K_{12}^{n,m}\,C_t}\;L_1^{n,m}\,AI^{n,m} - 2\sqrt{K_{22}^{n,m}\,C_t}\;L_2^{n,m}\,AI^{n,m} \\
&= AI^{n,m}\Big[\left(Z_1^{n,m} - Z_2^{n,m}\right) + \left(K_{11}^{n,m}\,L_1^{n,m} - K_{21}^{n,m}\,L_2^{n,m}\right)C_t \\
&+ 2\left(\sqrt{K_{12}^{n,m}\,C_t}\;L_1^{n,m} - \sqrt{K_{22}^{n,m}\,C_t}\;L_2^{n,m}\right)\Big]
\end{aligned} \tag{34}$$

$\theta_3^{n,m}$ is eliminated by the substitution and the value of $\frac{\partial H^{n,m}}{\partial\theta_3^{n,m}}$ becomes independent of $\theta_3^{n,m}$ as shown in Eq. 34. This implies that the value of $H^{n,m}$ is linearly related to $\theta_3^{n,m}$ and the extreme of $H^{n,m}$ with respect to $\theta_3^{n,m}$ occurs at a boundary. In this case, to obtain the minimum value of $H^{n,m}$, $\theta_3^{n,m} = 0$ when $\frac{\partial H^{n,m}}{\partial\theta_3^{n,m}} > 0$ or $\theta^{n,m} = 1$ when $\frac{\partial H^{n,m}}{\partial\theta_3^{n,m}} < 0$.

If $\frac{H^{n,m}}{\theta_3^{n,m}} = 0$, $\theta_3^{n,m}$ can be any value between 0 and 1 because the value of $H^{n,m}$ is independent of $\theta_3^{n,m}$.

When either $\theta_1^{n,m}$ or $\theta_2^{n,m}$ is equal to zero, or when both are equal to zero, Eq. 34 is no longer valid; Eq. 28 is then set equal to zero and solved for the optimal value of $\theta_3^{n,m}$.

Special Case

In an urban area, the space available for street or freeway construction is often limited. For example, a freeway with more than 8 lanes may be difficult to construct near the CBD. At the same time it may be the policy of the area to provide at least a minimum level of service in all parts of the urban area. Thus, it may be desirable to place upper and lower total investment limits on various links in the network. This is the condition 2c stated earlier.

Mathematically, this investment criterion can be expressed as follows:

$$\theta_{1\,min}^{n,m} \le K_{13}^{n,m} + \theta_1^{n,m} \le \theta_{1\,max}^{n,m} \tag{35}$$

$$\theta_{2\,min}^{n,m} \le K_{23}^{n,m} + \theta_2^{n,m} \le \theta_{2\,max}^{n,m} \tag{36}$$

This formulation provides the equations for searching the optimum sequence of the decision variables, $\theta_1^{n,m}$, $\theta_2^{n,m}$, and $\theta_3^{n,m}$ and the associated values of the state variables.

The optimum seeking procedure developed for this problem is as follows:

1. Assume a set of decision variables, $\theta_3^{n,m}$.

2. Calculate $X_1^{n,m}$, $X_2^{n,m}$ and $AI^{n,m}$ by Eqs. 6, 7, and 12, starting at n = m = 1 and proceeding to n = N and m = M.

3. Calculate decision variables $\theta_1^{n,m}$ and $\theta_2^{n,m}$ by Eqs. 30 and 32 and check the boundary conditions for each special case.

4. Calculate the values of $X_i^{n,m}$, i = 3, 4, 5, 6, by Eqs. 8 to 11, starting at n = m = 1 and proceeding to n = N and m = M.

5. Calculate the adjoint vectors, $Z_i^{n,m}$, i = 1, 2, with the above $X_i^{n,m}$ values, by Eqs. 14, 15, and 22, starting at n = N, m = M and proceeding backward to n = m = 1.

6. Using the above values of $X_i^{n,m}$ and $Z_i^{n,m}$, calculate $\frac{\partial H^{n,m}}{\partial \theta_3^{n,m}}$ and $\frac{\partial^2 H^{n,m}}{\left(\partial \theta_3^{n,m}\right)^2}$ by Eqs. 28 and 29.

7. Adjust the values of $\theta_3^{n,m}$ by adding an amount equal to Δ, where

$$\Delta = - \frac{\frac{\partial H^{n,m}}{\partial \theta_3^{n,m}}}{\frac{\partial^2 H^{n,m}}{\left(\partial \theta_3^{n,m}\right)^2}}$$

and check the boundary condition.

8. With the new values of $\theta_i^{n,m}$, return to step 2 and repeat the procedure until the value of the objective function, Eq. 21, is sufficiently close to the previous value to indicate adequate convergence.

SOLUTION TO NETWORK INVESTMENT CONDITIONS

Input data for the various investment conditions are summarized in Table 1. Since construction cost and right-of-way costs will not be the same throughout the network area, two values of K_{i3} were assigned to the links even though these links represent the same type of facility. For the same reason, in the link constraint condition 2c, links have different values for maximum and minimum investment levels. The derivation of these data is discussed in the Appendix. Time cost of travel was assumed to be $1.55 per hour per vehicle as suggested by AASHO (13).

Example 1: Investment in a network with no existing facilities.
Suppose we are planning a network for a given set of trips where no facilities presently

TABLE 1

INPUT DATA FOR EXAMPLE PROBLEMS

Nodes (n,m)	Links (i)	$K_{i1}^{n,m}$	$K_{i2}^{n,m}$	$K_{i3}^{n,m}$	$\theta_{imax}^{n,m}$	$\theta_{imin}^{n,m}$	$V^{n,m}$	$SI^{n,m}$
1,1	1	0.0143	0.00003	$ 8.0	$ 80	$10	2,000	$40
	2	0.0143	0.00004	8.0	80	10		
1,2	1	0.0143	0.00006	8.0	80	10	3,000	40
	2	0.0143	0.00005	10.0	80	10		
1,3	1	0.0143	0.00008	8.0	80	15	0	60
	2	0.0143	0.00006	8.0	80	10		
1,4	1	--	--	--	--	--	1,000	40
	2	0.0167	0.00010	15.0	100	15		
2,1	1	0.0143	0.00005	10.0	80	10	3,000	40
	2	0.0143	0.00005	8.0	80	10		
2,2	1	0.0143	0.00006	10.0	80	10	0	60
	2	0.0143	0.00005	10.0	80	10		
2,3	1	0.0167	0.00010	15.0	100	15	1,000	80
	2	0.0167	0.00008	12.0	100	15		
2,4	1	--	--	--	--	--	0	50
	2	0.0167	0.00015	15.0	100	15		
3,1	1	0.0143	0.00006	8.0	80	10	0	60
	2	0.0143	0.00006	8.0	80	10		
3,2	1	0.0167	0.00008	12.0	100	15	1,000	80
	2	0.0167	0.00010	15.0	100	15		
3,3	1	0.0167	0.00015	12.0	100	15	1,000	100
	2	0.0167	0.00015	12.0	100	15		
3,4	1	--	--	--	--	--	0	60
	2	0.0167	0.00025	15.0	100	15		
4,1	1	0.0167	0.00008	15.0	100	15	1,000	40
	2	--	--	--	--	--		
4,2	1	0.0167	0.00015	15.0	100	15	0	50
	2	--	--	--	--	--		
4,3	1	0.0167	0.00020	15.0	100	15	0	60
	2	--	--	--	--	--		
4,4	1	--	--	--	--	--	-13,000	0
	2	--	--	--	--	--		
Total				$272.0				$860

i = 1 for horizontal links
i = 2 for vertical links

GI = $300.00
C_t = $1.55/hour

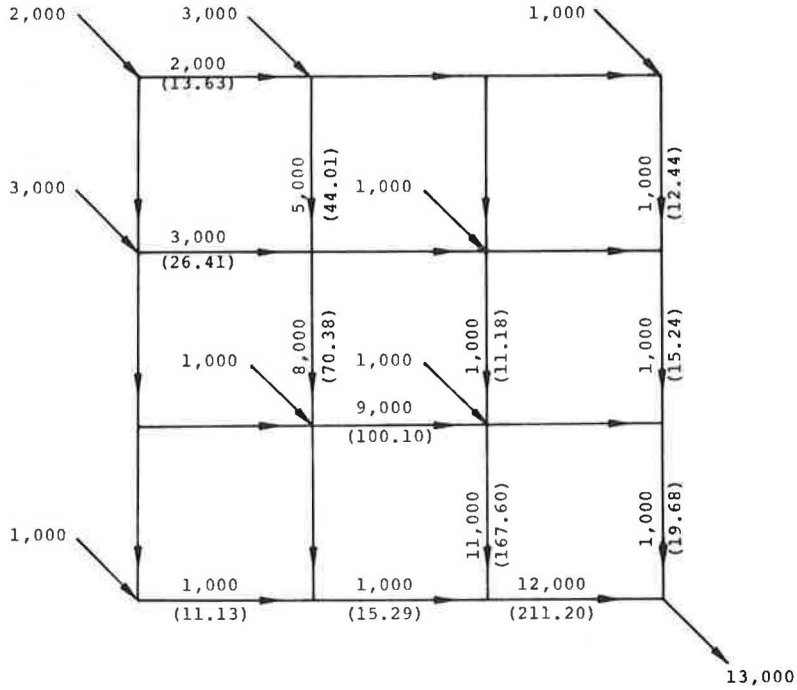

Existing Investment = \$ 0.0
Added Investment = \$ 718.63
Travel Time Cost = \$2,101.23 2,000 : Trip volume
Total Cost = \$2,819.86 (13.63): investment

Figure 7. Investment allocation in a network with no existing facilities and no budget constraint—Example 1a.

exist $\left(K_{i3}^{n,m} = 0\right)$. This might be the situation in a completely undeveloped area. It is desired to provide facilities for the area subject to three possible investment conditions.

Example problem 1a develops a network where no constraint is placed on the funds that can be spent for network facilities. This can be considered the theoretical optimal system since funds will be expended until the decrease in total travel costs are equal to the additional investment and the system is not burdened by sunk investments.

The resulting system is shown in Figure 7. Note that the system developed forms the minimum path tree in which only one route is built for each origin-destination pair and all trips are assigned to this route.

Example problem 1b again develops a network where no facilities presently exist but where a budget limitation that is less than the theoretical optimal budget determined in example problem 1a is placed on total investment expenditures. The optimal solution for this condition is shown in Figure 8. Again the system developed forms a minimum path tree as in example 1a. A link-by-link comparison shows that less funds are expended on each link resulting in increased travel costs. The increase in travel costs is greater than the decrease in investment costs.

Example problem 1c develops an undeveloped network and places limitation on funds that can be spent on the horizontal and vertical links leaving each node (n, m). The node budgets, $SI^{n,m}$, are tabulated in Table 1.

This type of situation might be encountered where the individual regions, represented by the nodes, are allowed to expend budgeted funds in their region only.

The model is formulated in such a manner (Fig. 9) that all budgeted funds must be spent, resulting in a total network investment of \$860. This is a greater expenditure than invested under no system budget limitations in example 1a. Further, the added expenditure failed to reduce total trip travel costs below the level achieved in example 1a.

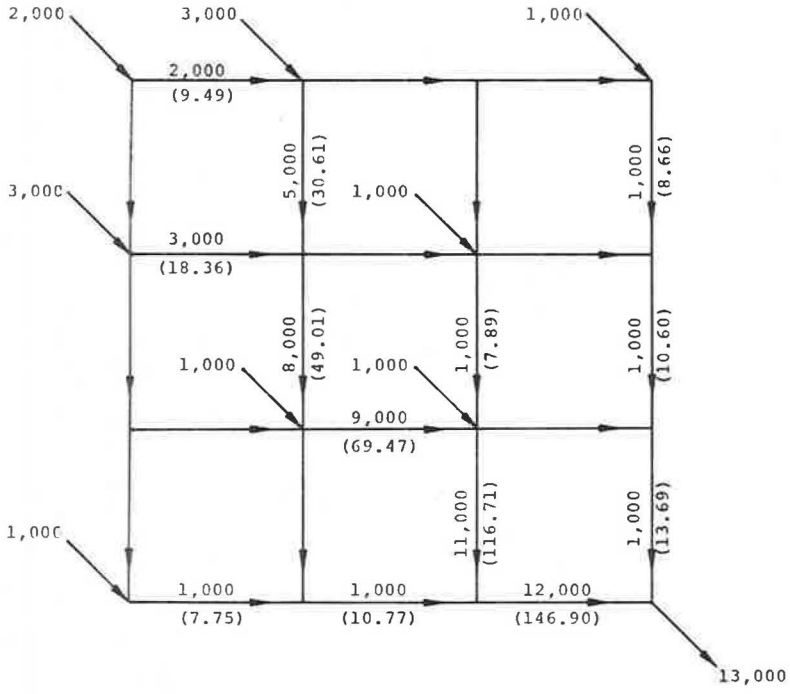

Existing Investment = $ 0.00
Added Investment = $ 500.00
Travel Time Cost = $2,415.86
Total Cost = $2,915.86

2,000 : trip volume
(9.49): added investment

Figure 8. Investment allocation in a network with no existing facilities and a fixed overall system budget—Example 1b.

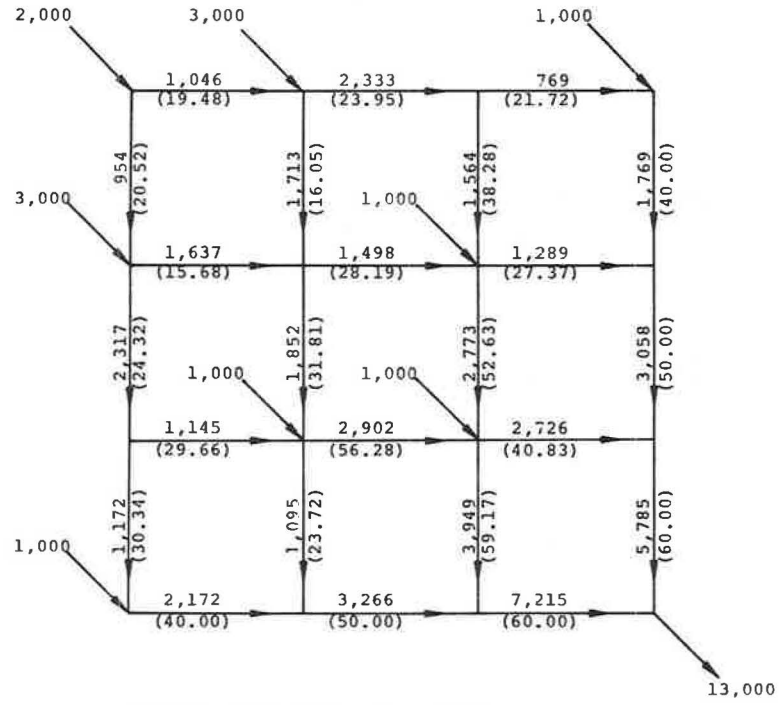

Existing Investment = $ 0.00
Added Investment = $ 860.00
Travel Time Cost = $2,252.91
Total Cost = $3,112.91

1046 : trip volume
(19.48): investment

Figure 9. Investment allocation in a network with no existing facilities and a fixed budget at each node—Example 1c.

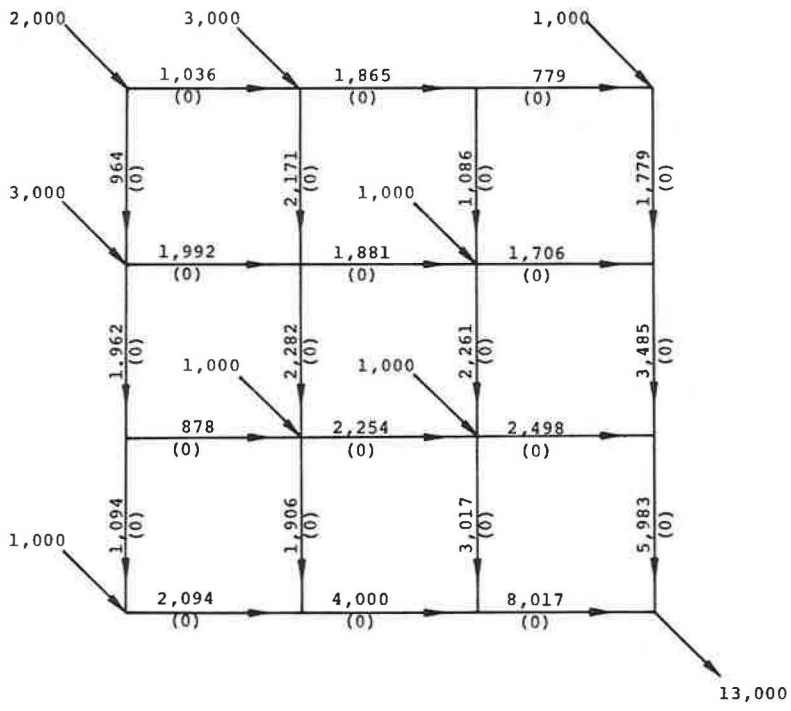

Existing Investment = $ 272.00
Added Investment = $ 0.00
Travel Time Cost = $4,585.94
Total Cost = $4,857.94

1036: trip volume
(0) : added investment

Figure 10. Travel time cost on network with existing facilities before additional investment—Example 2a.

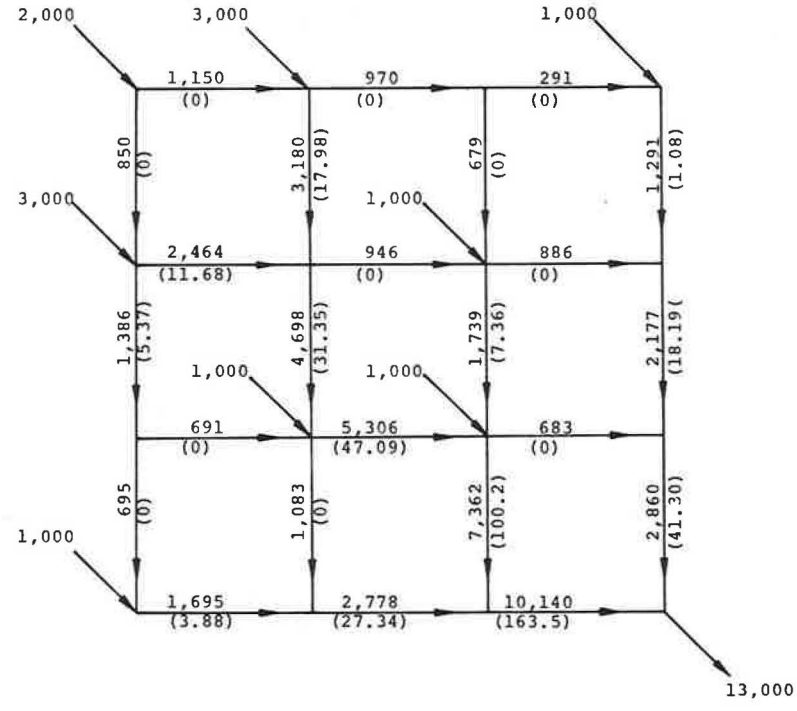

Existing Investment = $ 272.00
Added Investment = $ 477.96
Travel Time Cost = $2,100.96
Total Cost = $2,850.92

1150: trip volume
(0) : added investment

Figure 11. Investment allocation on a network with existing facilities and no budget constraint—Example 2b.

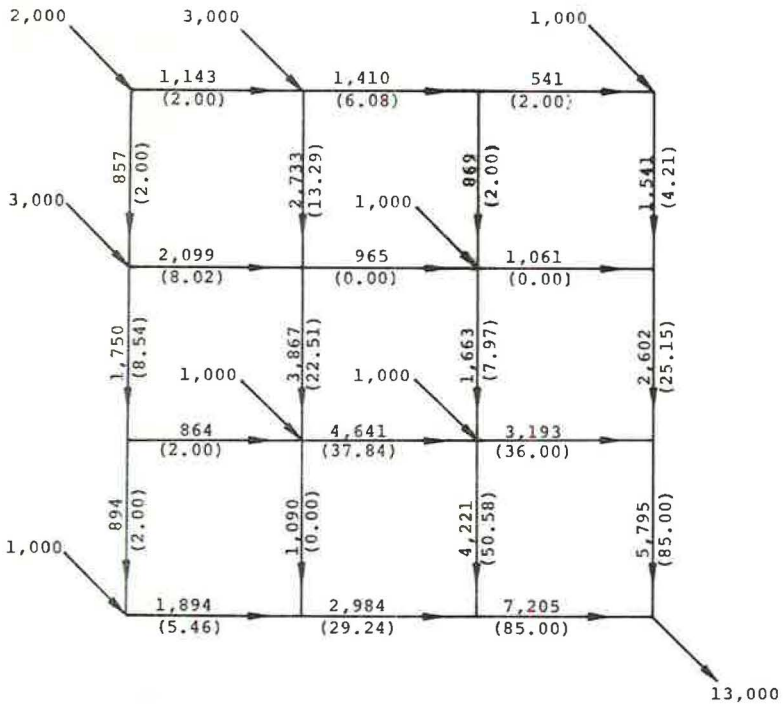

Existing Investment = $ 0.00
Added Investment = $ 445.04
Travel Time Cost = $2,158.95
Total Cost = $2,875.99

1,143 : trip volume
(2.00): added investment

Figure 12. Investment allocation in a network with existing facilities and upper and lower limits on link investment level—Example 2c.

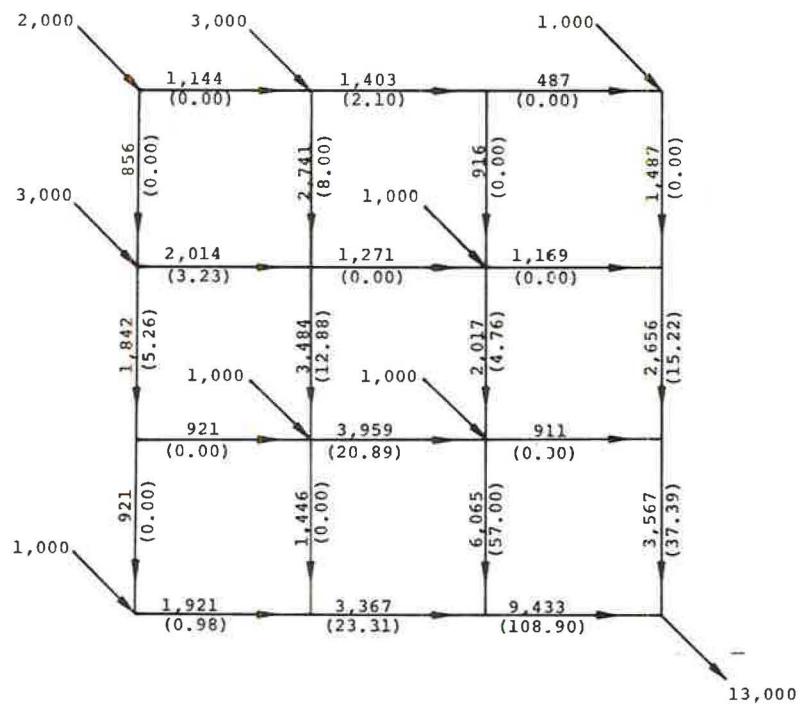

Existing Investment = $ 272.00
Added Investment = $ 300.00
Travel Time Cost = $2,339.38
Total Cost = $2,911.38

1,144 : trip volume
(0.00): added investment

Figure 13. Investment allocation in a network with existing facilities and a fixed overall system budget—Example 2d.

In other words, the area development scheme, as simulated by node budget constraints, resulted in increased trip travel cost even though the total investment was somewhat greater than the budget in example 1a, indicating that this can be an uneconomic method of system development.

Example 2: Investment in a network with existing facilities.

In the next four example problems it was assumed that existing facilities do exist. The magnitude of the existing investment in each link is given by $K_{i3}^{n,m}$ in Table 1. The total existing investment is equal to $272 for the entire network. The objective in these example problems is to improve an existing network, subject to specified constraints, in an optimal fashion.

Example problem 2a might be considered the "benchmark" condition since it represents travel costs on the network before any improvement investment takes place. The trip assignment pattern developed under these conditions is shown in Figure 10. Note that each link in the network is being utilized.

In example problem 2b the network is improved with no limit placed on the magnitude of the investment. The solution to this condition is shown in Figure 11. An investment of $477.96 resulted in a reduction of travel costs of $2,484.98 as determined in example 2a.

Figure 12 shows the solution to example problem 2c when upper and lower total investment limits are placed on each link. These limits, $\theta_{i\ max}^{n,m}$ and $\theta_{i\ min}^{n,m}$, are given in Table 1. In only two locations were the limits in effect. The links leaving node (1, 1) are bounded by the lower limit. In other words, the traffic using these links does not fully utilize the minimum level of total investment required. The links entering node (4, 4), the CBD, are bounded by the upper investment limit of $100 on each link. Thus these links are carrying traffic in excess of their economic limit. If additional investment were possible on these two links total travel time cost would be reduced. It should be noted that since existing investments do exist on every link, every link is used to accommodate trips.

Example problem 2d demonstrates the effect of a network budget limitation (Fig. 13). The model formulation required that the budget, set at $300, was to be completely spent on the network. The budget of $300 plus the existing investment of $272 results in a total investment of $572, which is $146.63 less than the optimal investment of $718.63 determined in example 1a. While the investment cost is $146.63 less, the total travel cost was $238.15 greater than the optimal solution 1a. It might be noted that on several links no additional investments were required since existing investment was sufficient to handle trip demands.

CONCLUSIONS

A new technique for the analysis of transportation system investment problems has been presented. Considering each node of a rectangular urban network as a stage, a discrete version of the maximum principle was utilized to formulate a transportation system model. An investment model was derived for the condition when no budget limitation was present. Other investment models illustrating different conditions were presented through the use of example problems.

As opposed to linear programming models, the maximum principle is capable of attacking transportation system investment problems that include nonlinear relationships between travel time, traffic volume, and investment cost.

Although the models presented were applied to only single copy networks, no difficulty should be experienced in extending the technique to more complex networks.

Although this paper marks only a first step in an attempt to apply a new technique to the complex problem of optimal network development, some generalized statements and conclusions are in order:

1. In Table 2 are given the solutions to the various investment conditions. Here it is noted that the least constrained system, example problem 1a, produces the least-cost solution. As soon as constraints, in the form of budgets and/or sunk investments, were placed on the system, total costs increased, producing non-optimal solutions.

TABLE 2

RECAP OF VARIOUS SYSTEM INVESTMENT CONDITIONS AND COSTS*

(1) Example Problem	(2) Network Investment Conditions	(3) Existing Investment Cost	(4) Added Investment Cost	(5) Total System Travel Cost	(6) Total Cost (3)+(4)+(5)
1a	No Budget Constraint $K_{i3}^{n,m} = 0$	0.0	$718.63	$2,101.23	$2,819.86
1b	Fixed System Budget $K_{i3}^{n,m} = 0$	0.0	500.0	2,415.86	2,915.86
1c	Fixed Budget at each Node $SI^{n,m} = \theta_1^{n,m}+\theta_2^{n,m}$ $K_{i3}^{n,m} = 0$	0.0	860.00	2,252.91	3,112,91
2a	System Budget = 0 $K_{i3}^{n,m}$ = Table 1	$272.00	0.00	4,585.94	4,857.94
2b	No Improvement Budget Constraint $K_{i3}^{n,m}$ = Table 1	272.00	477.96	2,100.96	2,850.92
2c	Upper & Lower Limit on Link Investment $\theta_{imin}^{n,m} \leq K_{i3}^{n,m}+\theta_i^{n,m} \leq \theta_{imax}^{n,m}$ Table 1 $K_{i3}^{n,m}$ = Table 1	272.00	445.04	2,158.95	2,875.99
2d	Fixed System Budget $K_{i3}^{n,m}$ = Table 1	272.00	300.00	2,339.38	2,911.38

*All costs assumed to be equivalent hourly costs.

2. The models were so formulated that all budgeted funds had to be expended. This is in keeping with government policies at almost all levels. When a budget was allocated in a non-optimal fashion, as in the case of example problem 1c, a non-optimal overall solution resulted.

3. It is felt that the models are realistic since added investments produced reduced total travel costs.

4. A systems effect is necessary to achieve a true optimum. That is to say that all system benefits must be compared to total system costs to determine the optimal solution. When this is not allowed, as in example problem 1c where each node has budget constraint, a non-optimal solution occurs.

5. Sunk investment in the form of existing facilities can act as a constraint and produce a non-optimal solution when compared to the theoretically optimal condition 1a.

6. With the exception of condition 2a, the optimal solutions to the various situations all fall within a 10 percent range. It thus appears that no matter what the condition of investment might be the solution to this condition may not be too far from the true theoretical optimum determined in 1a. It may be that other considerations may be more important than construction and operating costs in determining the optimal network development policy.

Although the functional relationships derived in this paper could be improved, the research did demonstrate the ability of the discrete maximum principle to solve nonlinear optimization problems. Improved data and additional research into the relationship between travel time, capacity, traffic flow, and investment are needed to make the models more realistic and useful.

The next logical step in this research should be aimed at the multi-copy problem, the problem of mixed modes and the problem of optimal staging in a dynamic situation. Finally the relationship between land-use and transportation needs to be formalized and brought into the optimal investment problem.

REFERENCES

1. Zettel, Richard M., and Carll, Richard R. Summary Review of Major Metropolitan Area Transportation Studies in the United States. ITTE Special Report, University of California, Berkeley, Nov. 1962.
2. Committee on Urban Transportation of the Highway Division. Urban Transportation Problem. Jour. Highway Div., ASCE, Vol. 83, No. HW3, Oct. 1958, Proc. Paper 1801.
3. Garrison, W. L., and Marble, D. F. Analysis of Highway Networks: A linear Programming Formulation. HRB Proc., Vol. 37, p. 1-17, 1958.
4. Carter, E. C., and Stowers, J. R. Model for Funds Allocation for Urban Highway Systems Capacity Improvements. Highway Research Record 20, p. 84-102, 1963.
5. Funk, J. L., and Roberts, P. O. Toward Optimum Methods of Link Addition in Networks. Report, Department of Civil Engineering, Northwestern University, Sept. 1964.
6. Roberts, P. O., Burns, R. E., and Tabora, P. N. A Model for the Formulation of Transportation System Alternatives. Preprint 316, ASCE Structural Engineering Conference, Miami, Florida, Jan. 1966.
7. Hay, G. A., Morlock, E. K., and Charnes, A. Toward Optimal Planning of a Two-Mode Urban Transportation System: A Linear Programming Formulation. Highway Research Record 148, p. 20-38, 1966.
8. Ridley, T. M. An Investment Policy to Reduce the Travel Time in a Transportation Network. Operations Research Center, University of California, Berkeley, Dec. 1965.
9. Fan, Liang-tseng, and Wang, Chiu-sen. The Discrete Maximum Principle—a Study of Multistage Optimization. John Wiley, New York, 1964.
10. Yang, T. C., and Snell, R. R. Traffic Assignment by the Maximum Principle. Jour. Highway Div., ASCE, Vol. 92, No. HW2, Oct. 1966, p. 1-14.
11. Funk, M. L., Snell, R. R., and Blackburn, J. B. Optimal Allocation of Trips to a Street Network. Jour. Highway Div., ASCE, Vol. 93, No. HW2, Nov. 1967, p. 95-114.
12. Wang, Jin-Jerg. Toward a Solution for the Optimal Allocation of Investment in Transportation Network Development. Masters Thesis, Department of Civil Engineering, Kansas State University, 1967.
13. Road User Benefit Analysis for Highway Improvements. American Association of State Highway Officials, Washington, 1960.
14. Aitkin, P. W. Cost of Constructing Transportation Facilities in the Chicago Standard Metropolitan Area. CATS Research News, Vol. 1, No. 14, p. 8-11, Aug. 2, 1967.
15. Moskowitz, K. A Note on Prorating Highway Costs. Unpublished Report, June 1964.
16. McElrath, D., Rothenberg, T., Shuldiner, P., and Funk, M. L. Automobile Transportation Systems: Cost Characteristics. The Mid-Twentieth Century City Study, Preliminary Report No. 3, The Transportation Center, Northwestern University.
17. Highway Capacity Manual, HRB Spec. Rept. 87, 1965.

Appendix

DERIVATION OF CONSTANTS IN UNIT TRAVEL TIME EQUATION

Unit travel time has been expressed as

$$t = K_1 + \frac{K_2}{\theta + K_3} V \qquad \text{(A-1)}$$

where

t = unit travel time (hr/mi/veh);
K_1 = free flow travel time (hr/mi/veh)—the magnitude depends on the maximum speed obtainable or regulated;
K_2 = coefficient of improvement (dollar-hr/mi^2/veh^2)—its magnitude depends on link location and reflects the difficulty of improvement;
K_3 = existing investment (dollar/mi/hr);
θ = equivalent hourly investment per unit length (dollar/mi/hr); and
V = traffic volume per unit time (veh/hr).

In this section, a set of K values is derived from data reported by other researchers. The purpose of this section is twofold: (a) to justify the fitness of the equation, and (b) to obtain a set of K values for the example problems.

Values of K_1

The K_1 value is equal to the reciprocal of the maximum speed obtainable or regulated in each area. Several common values are as follows:

Maximum Speed (mph)	K_1 Values (hr/mile)
70	0.0143
60	0.0167
50	0.0200

For the example problems, maximum speeds were assumed to be 70 mph in less densely developed areas and 60 mph in densely developed areas. The K_1 values are therefore 0.0143 and 0.0167 hours per mile respectively.

Values of K_2

1. Near CBD Area:

The average cost of an 8-lane freeway near the CBD, as estimated by Aitken (14), is $15,500,000 per mile. Assuming 30-year life and 6 percent interest, annual cost is equal to $1,130,000 per mile. If we further assume peak hour traffic is 10 percent of daily traffic, the equivalent peak hour cost becomes

$$\$1{,}130{,}000 \times \frac{1}{360} \times \frac{1}{10} = \$314 \text{ per mile per hour}$$

This freeway can handle 1100 vph per lane at unit travel time of 0.02 hr/mile. Assuming K_1 = 0.0143 hr/mi/veh (70 mph speed), K_2 is derived as follows:

$$0.0143 + \frac{K_2}{314}(1100 \times 8) = 0.020$$

or

$$K_2 = 0.00207 \text{ dollar-hr/mi}^2\text{/veh}^2 \qquad \text{(A-2)}$$

TABLE A-1

COST CHARACTERISTICS OF URBAN HIGHWAYS

Characteristic	Local Street	Arterial	Freeway
Practical capacity (vph/lane)	500	700	1800
Average speed (mph)	20	25-40	45-65
Right-of-way cost ($/mile)	250,000	450,000	4-8 million
Construction cost ($/mile)	300,000	500,000	4-6 million
Total cost ($/mile)	550,000	950,000	8-14 million

Using Haikalis' data and adjusting for the downtown area, Hay et al (7) used an arterial street with 2000 vph volume at unit travel time of 0.0333 hour per mile costs $3,400,000 per mile or $250,000 per mile annually. Equivalent peak hour cost becomes:

$$\$250{,}000 \times \frac{1}{360} \times \frac{1}{10} = \$69.5 \text{ per mile per hour}$$

Assuming $K_1 = 0.025$ hr/mi/veh (40 mph speed), K_2 is derived as follows:

$$0.025 + \frac{K_2}{69.5}\, 2{,}000 = 0.0333$$

$$K_2 = 0.000288 \text{ dollar-hr/mi}^2\text{/veh}^2 \qquad \text{(A-3)}$$

2. Average Urban Area:

The overall average cost for an 8-lane urban freeway is $5,000,000 per mile as estimated by Moskowitz (15). Assuming 30-year life and 6 percent interest, equivalent peak hour cost becomes:

$$\$5{,}000{,}000 \times 0.0726 \times \frac{1}{360} \times \frac{1}{10} = \$101 \text{ per mile per hour}$$

Using Figure 3.38 in the Highway Capacity Manual (17), a typical freeway with 70-mph average highway speed can handle 1800 vph per lane at a speed of 45 mph. The K_2 value is derived as follows:

$$K_1 = 0.0143 \text{ hr/mi/veh}$$

$$0.0143 + \frac{K_2}{101}(1800 \times 8) = 0.0222 \qquad \text{(A-4)}$$

$$K_2 = 0.0000553 \text{ dollar-hr/mi}^2\text{/veh}^2$$

TABLE A-2

COST AND TRAVEL TIME OF URBAN HIGHWAYS

Characteristic	Local Street	Arterial	Freeway
Number of lanes	2	4	6
Total volume (vph)	1,000	2,800	10,800
Average speed (mph)	20	32.5	55
Total cost ($/mile)	550,000	950,000	8-14 million
Equivalent peak hour cost ($/mile)	11.1	19.2	161-282
Assumed maximum speed (mph)	35	40	70
Minimum unit travel time (hr/mile)	0.0286	0.025	0.0143
Average travel time (hr/mile)	0.05	0.0308	0.0182

As summarized from "Automobile Transportation Systems: Cost Characteristics" (16), Table A-1 shows relationships among volume, average speed, and cost for three types of urban roads. Using these values and the assumed maximum speeds and average lanes, Table A-2 is obtained. The K_2 values are, then, derived as follows:

Local street:

$$0.0286 + \frac{K_2}{11.1} \times 1000 = 0.05$$

$$K_2 = 0.000227 \text{ dollar-hr/mi}^2\text{/veh}^2 \qquad \text{(A-5)}$$

Arterial street:

$$0.025 + \frac{K_2}{19.2} \times 2800 = 0.308$$

$$K_2 = 0.0000398 \text{ dollar-hr/mi}^2\text{/veh}^2 \qquad \text{(A-6)}$$

Freeway:

$$0.0143 + \frac{K_2}{161} 10800 = 0.0182$$

$$K_2 = 0.0000582 \text{ dollar-hr/mi}^2\text{/veh}^2 \qquad \text{(A-7)}$$

$$0.0413 + \frac{K_2}{282} 10800 = 0.0182$$

$$K_2 = 0.000102 \text{ dollar-hr/mi}^2\text{/veh}^2 \qquad \text{(A-8)}$$

3. Rural Area:

Cost data for rural highways are not generally available. However, the cost of a rural freeway may be assumed as equal to the lowest cost of a freeway in an urban area.

On this basis an 8-lane freeway will cost about $3,000,000 per mile (16). Using Figure 3.38 in the Highway Capacity Manual (17), a typical freeway with 70-mph average highway speed can handle 1800 vph per lane at 45 mph. Equivalent peak hour cost becomes

$$\$3{,}000{,}000 \times 0.0726 \times \frac{1}{360} \times \frac{1}{10} = \$60.5 \text{ per mile per hour}$$

The K_2 value is derived as follows:

$$0.0143 + \frac{K_2}{60.5} (1800 \times 8) = 0.0222$$

$$K_2 = 0.00003322 \text{ dollar-hr/mi}^2\text{/veh}^2 \qquad \text{(A-9)}$$

Excluding Eq. A-5, K_2 values are summarized as follows:

Type of Area	Range of K_2 Value
CBD	0.000207-0.000288
Average urban area	0.0000398-0.000102
Rural	0.0000332

The wide range of K_2 values in an average urban area is caused by the wide variance of urban freeway costs as shown in Table A-1. In general, K_2 value is fairly consistent in each area. This indicates a fairly good correlation between the equation and the real-world situation.

Values of K_3

The K_3 value represents the existing facilities in terms of cost per mile per hour. Equivalent peak hour cost, for each type of road, derived in the previous sections gives the average values of K_3.

The K values used in the example problems are summarized in Table 1.