Vibration and Damping of Aluminum Overhead Sign Structures

J. S. LENGEL, Aluminum Company of America, and
M. L. SHARP, Alcoa Research Laboratories

The wind-induced vibration characteristics of a 78-ft span aluminum overhead sign structure and the damping requirements to prevent significant vibration were investigated. Stresses in chord members introduced when sections of the truss were bolted together and stresses in members at typical joints during vibration were also evaluated.

Stresses as high as 12,900 psi were determined in a chord member near a splicing flange when the bolts were tightened. Average stresses from strain gage readings taken near all four splicing flanges and in members near two joints when the structure was force-vibrated were generally slightly less than the average values calculated assuming pin joints in the truss and simple supports. Peak stresses in the members were as much as double the average stresses.

Single amplitudes at midspan of the structure as high as ±0.44 in. were measured during wind-induced vibration. The greatest response occurred when the component of velocity of wind normal to the truss was between about 7 and 12 mph. The calculated velocity required for vortices shed from the chord members to be in resonance with the natural frequency of the truss was 9 mph.

A single Stockbridge-type vibration damper, attached to the test structure at midspan, prevented vibration in the wind. Three different damper sizes were tried: 15, 31, and 35 lb. All were effective in preventing vibration.

Laboratory tests of the three models of dampers established the efficiency of the dampers (power dissipated) for frequencies from about 4 to 11 cps, the range of frequencies expected in overhead sign structures. These data and information on the power supplied by the wind to these structures provide means for the choice of dampers for other similar structures.

•OVERHEAD sign structures have occasionally been observed to vibrate in the presence of mild winds during the period before sign panels were installed. In some cases cracks were developed adjacent to welds at critical locations, such as near a splicing flange. Metallographic examination confirmed that these failures resulted from fatigue action, presumably from wind vibration.

In order to investigate vibration characteristics and means of preventing vibration, a full-sized overhead sign structure was erected for tests. The investigation was divided into three parts:

1. Measurement of stresses introduced during fabrication and by forced vibration;
2. Determination of vibration characteristics; and
3. Investigation of effectiveness of vibration dampers.

Paper sponsored by Committee on Guardrails, Median Barriers and Sign, Signal and Lighting Supports.

TEST STRUCTURE

The 78-ft span test truss is shown in Figure 1. The truss was comprised of welded tubular members of 6061-T6, representative of structures of this type. The truss had two sections of equal length that were joined by bolts in the field. The member sizes were based on a wind loading of about 30 psf and a sign area of 300 sq ft. The attachment of the truss to the end supports by U-bolts is commonly used for this type of structure.

STRESSES INTRODUCED BY FABRICATION AND VIBRATION

Stresses Introduced by Fabrication

Significant stresses (prestresses) were developed in the chord members, as summarized in Table 1, when the two sections of the truss were bolted together. The location of the SR-4 strain gages (A5-1) and the type of misalignment are shown in the sketches in Table 1. To obtain the values shown, the truss was supported on each side of the splicing flanges, the bolts were loosened, the gap at the edge of the flange was measured at 4 points, and the bolts retightened. Stresses were calculated from the strain readings taken after the bolts were loosened and tightened.

It is probably not possible to eliminate all mismatch at the splicing flange. Because the stresses vary with width of gap, however, it is desirable to minimize the mismatch. Other built-in stresses, such as residual stresses due to welding, were not evaluated, but these are also detrimental if fatigue action is present.

Stresses Introduced by Vibration

Dynamic stresses produced by forced vibration for a ½-in. amplitude are given in Figure 2. These stresses varied linearly with amplitude for single amplitudes in the range of ⅛ to ½ in. The truss was vibrated at its natural frequency, 6.6 cps, in the vertical direction at a constant amplitude by means of a mechanical oscillator. A differential transformer was used to monitor vertical deflection at midspan. Deflections and strains were recorded simultaneously by a Brush direct-writing oscillograph.

There was some bending in most of the members. The maximum stresses near the splicing flange were as much as 50 percent greater than the average stress in the chord member. Stresses in the members near the joints also reflected some bending. The

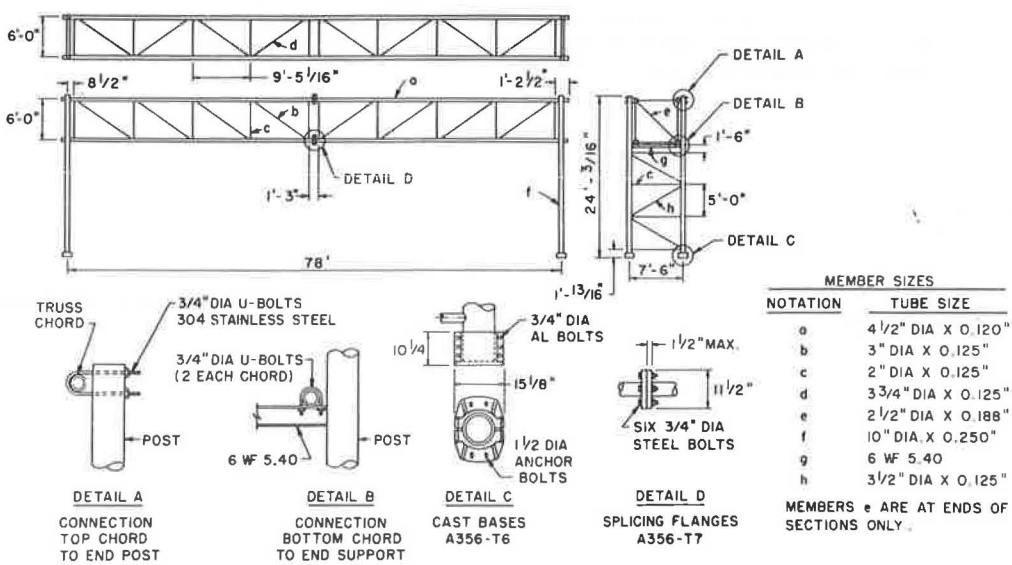

Figure 1. Experimental aluminum sign structure.

TABLE 1

ERECTION STRESSES IN CHORDS AT SPLICING FLANGES

Position on Chord	Chord A		Chord B		Chord C		Chord D	
	Stress, psi	Gap, in.*	Stress, psi	Gap, in.	Stress, psi	Gap, in.	Stress, psi	Gap, in.
Top	+6400	7/32	+4000	8/32	+12, 900	11/32	+8700	10/32
Bottom	-5400	2/32	-5100	2/32	-12, 500	0	-9500	1/32
Right side	+7700	8/32	-5200	1/32	-4, 000	5/32	-2600	4/32
Left side	-8600	1/32	+5300	7/32	+4, 600	6/32	+900	6/32

*Gap measured at edge of splicing flange when bolts were loose.
Bolt torque 1350 in.-lb.

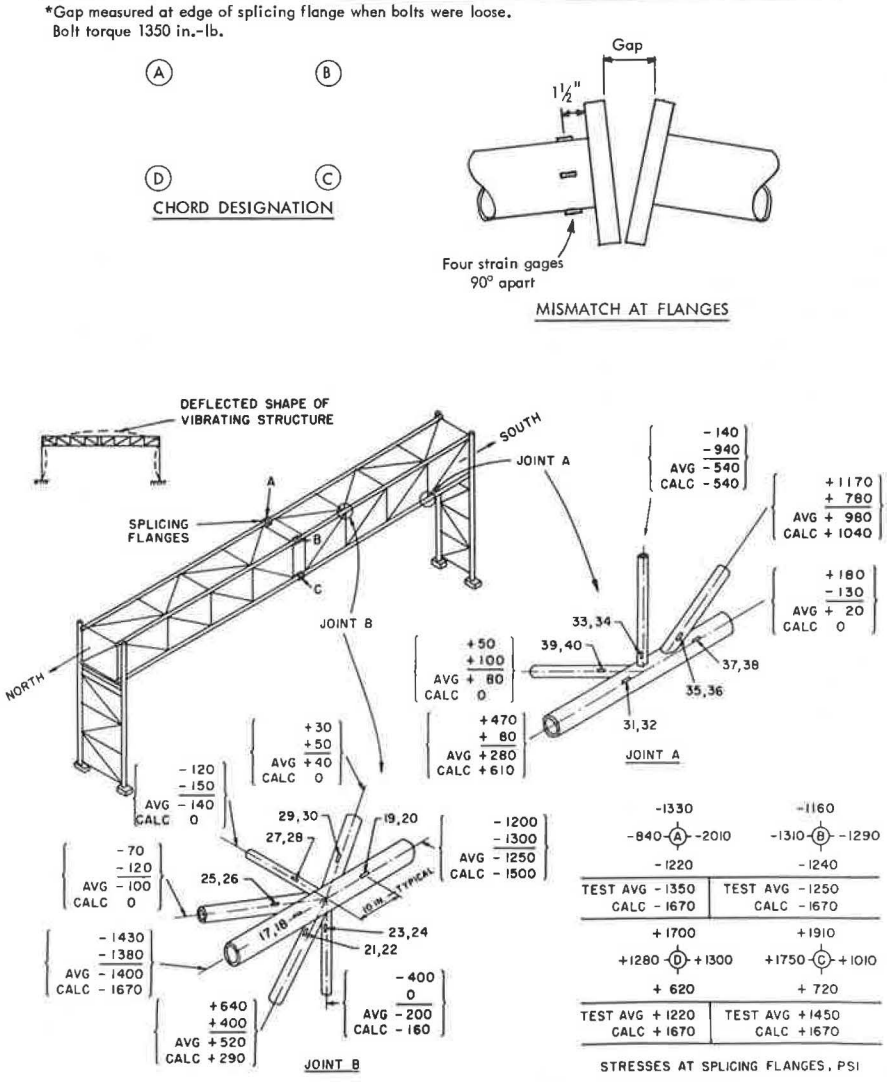

Figure 2. Strain gage locations and stresses in members.

maximum stress was as much as double the average stress in one member. These peak stresses should not affect the static strength of the structure but would be detrimental to fatigue life.

The calculated average stresses in Figure 2 are based on the assumption of pin joints and simple supports at the ends of the truss. Generally, the calculated stresses were slightly greater than the average stress values obtained from test. Local bending of the tube walls undoubtedly contributes to the disagreement in some cases.

Combined Effect of Prestress and Vibration Stresses

For a given stress due to vibration, cracks will form in the presence of high prestress at shorter lives than would be the case for no prestress. Significantly, most of the cracks that have been reported in structures of this type have occurred near splicing flanges, an area of high prestress. Large numbers of cycles of stress can be accumulated over a relatively short period of time. For the test truss with a natural frequency of 6.6 cps, over 570,000 cycles per day can be accumulated. To prevent fatigue cracks, therefore, it is necessary to prevent the vibration or to reduce the amplitudes to low values.

VIBRATION CHARACTERISTICS OF TEST STRUCTURE

The midspan deflections of the truss due to wind-induced vibration and the wind speed and the wind direction were monitored during April and May of 1967. Wind velocities were generally between 5 and 20 mph, with gusts occasionally as high as 40 to 50 mph. The structure always vibrated vertically at its first mode frequency, 6.6 cps. There was no evidence of lateral, longitudinal, or torsional vibrations. No vibrations of individual members were noted. The structure had the greatest response to wind when the component of velocity normal to the truss was between 7 and 12 mph.

The response of the truss to winds of these velocities suggests that the vibration was caused by vortices (1) shed primarily from the chord members. The frequency of vortices shed from a cylindrical body (2) is

$$f = \frac{3.26V}{d} \tag{1}$$

where

f = frequency, cps;
V = velocity of wind, mph; and
d = diameter of cylinder, in.

For the 4½-in. diameter chord member a 9-mph wind is required to have the vortices shed at the same frequency as the natural frequency of the structure. Vibration can also occur at wind speeds slightly less than or greater than that required by Eq. 1 for resonance (3, 4).

WAYS TO PREVENT VIBRATION

Three ways to prevent or to limit the amplitudes of wind-induced vibration in structures (3, 5, 6) are

1. Use of structures having sufficient stiffness so that the natural frequencies of the structure will not be in resonance with the frequency of vortex shedding for all expected wind velocities;
2. Use of "spoilers" to disturb the flow of air over the structure and thus break up the regular pattern of vortex shedding; and
3. Use of damping for the structure.

All three approaches were considered. Damping the structure by the use of Stockbridge-type vibration dampers was found to be the most practical and economical

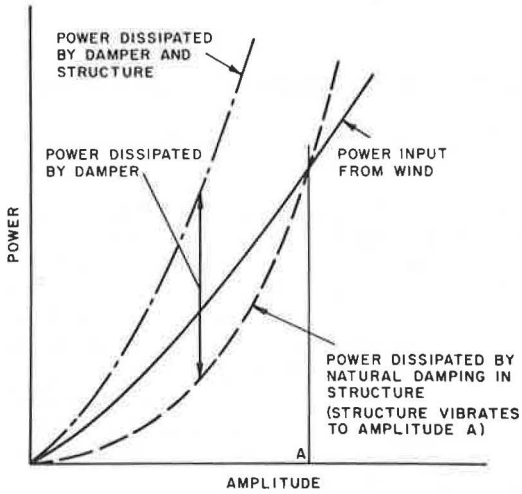

Figure 3. Analysis for damping requirements.

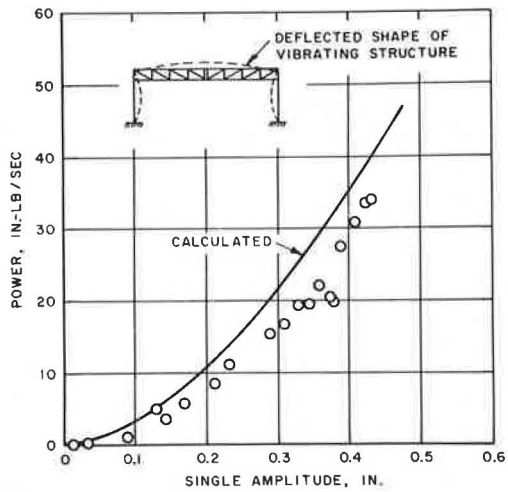

Figure 4. Power input from wind to structure.

solution. Thus, a detailed study was limited to the third item. Sufficient damping must be supplied so that the power that can be dissipated by the dampers always exceeds the power that can be put into the structure by the wind. Figure 3 shows an analysis of vibration of a structure based on power considerations. This structure would vibrate to amplitude A, the amplitude at which the power that can be dissipated by natural damping is equal to the power that can be input from the wind. When sufficient damping is provided so that the power that can be dissipated is always greater than the power that can be input by the wind, as shown by the upper dashed line, vibrations cannot be initiated or sustained by the wind.

POWER INPUT TO STRUCTURE BY WIND

Information has been published on power input by the wind and/or lift forces for cylindrical bodies (3, 4, 5). Apparently, however, little information is available for the power from the wind that is supplied to more complex structures such as sign structures. Because the chord members seem to be the elements that were most instrumental in the vibration, the equation developed by Farquharson and McHugh (4) for power input to a tube vibrating in sine waves was used to estimate power input to the test structure. If it is assumed that the four chords were entirely responsible for the vibration, the equation can be expressed as follows:

$$P = 35.3 \times 10^{-8} L d^4 f^3 \left[2,220 \left(\frac{y}{d}\right)^2 - 13,100 \left(\frac{y}{d}\right)^3 + 36,300 \left(\frac{y}{d}\right)^4 \right] \qquad (2)$$

where

P = power input, in.-lb/sec;
d = diameter of chord, in.;
L = truss span, ft;
y = single amplitude of vibration, in.; and
f = natural frequency of vibration of structure, cps.

To verify the adequacy of Eq. 2, power inputs from the wind to the test structure were calculated from the maximum rate of increase of amplitude as follows:

$$P = 2\delta U f \qquad (3)$$

where

P = power, in.-lb/sec;
δ = natural log of ratio of two amplitudes divided by the number of cycles between amplitudes;
U = potential energy in structure, in.-lb; and
f = frequency, cps.

The power dissipated by natural damping in the structure was determined from the records of the free response of the structure following mechanical excitation in the absence of wind. This was added to the power given by Eq. 3 to get the total power input from the wind shown in Figure 4. Figure 4 shows that Eq. 2 slightly overestimated the power input from the wind. Because the chord members are somewhat larger than other members of the truss it is reasonable that this member would be instrumental in any wind-induced vibration. Since vortex shedding occurs for all tubes, however, all members of the structure conceivably could contribute to the power input from the wind. This effect is apparently somewhat nullified by shielding of some members by others. The maximum single amplitude of wind-induced vibration measured was ±0.44 in. Single amplitudes between 0.42 and 0.44 in. were recorded three times.

Sign panels when placed on the structure reduce the power that is supplied by the wind in at least two ways: (a) the weight of the panels reduces the natural frequency of the structure (power varies as the cube of the frequency—see Eq. 2); and (b) the signs shield members from the wind, thus reducing power input. In addition, structural damping is provided by the connections of the signs to the truss. Therefore, structures with signs should be and have been found to be less susceptible to wind-induced vibration than are structures without signs.

POWER DISSIPATED BY STRUCTURE AND DAMPERS

Natural Damping in the Structure

The power dissipated by natural damping in the structure was calculated for various amplitudes of vibration by the use of the free vibration response of the structure as shown in Figure 5 and Eq. 3. The natural damping is small and would probably be

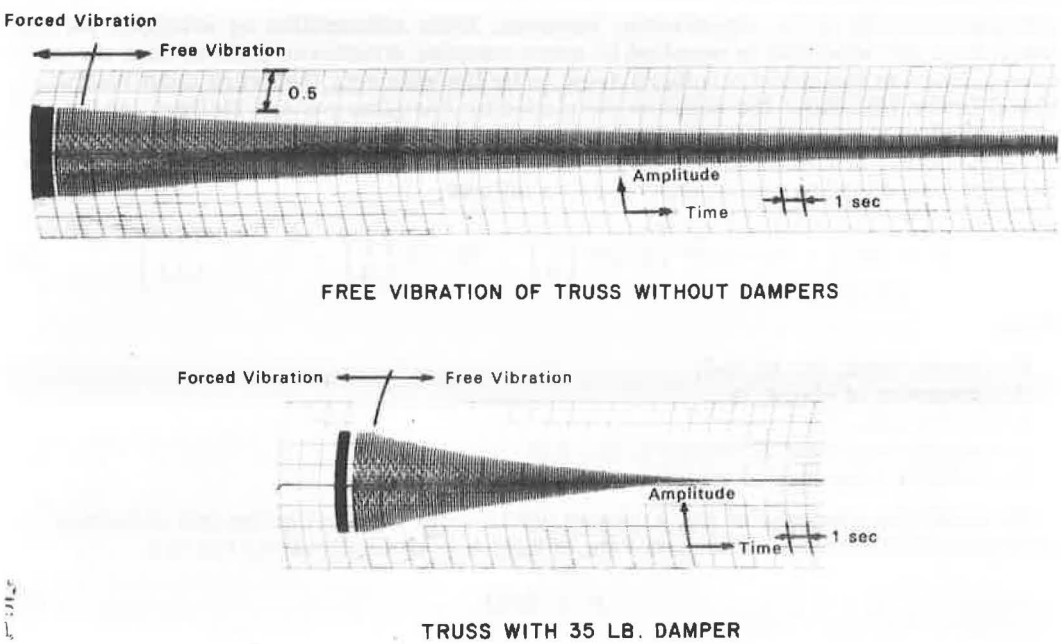

Figure 5. Oscillograph records of truss vibration.

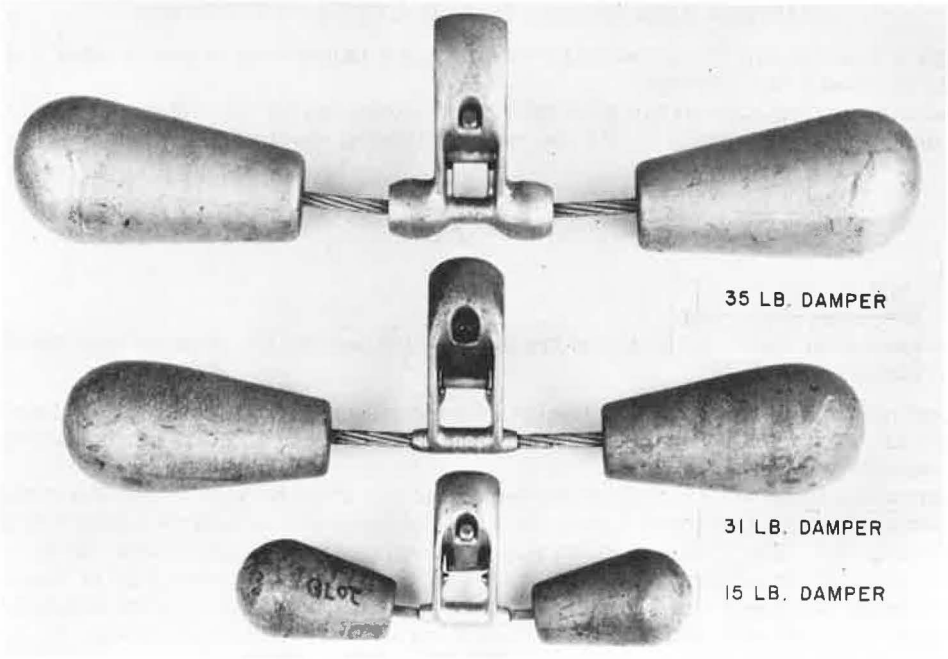

Figure 6. Stockbridge-type vibration dampers.

somewhat different for each structure of this type because of differences in details at the bolted connections and differences in soil conditions from one installation to another. Because of this possible variation, the power dissipated by natural damping of the structure is neglected in subsequent work in this paper.

Stockbridge-Type Vibration Dampers

The Stockbridge-type vibration dampers shown in Figure 6 were evaluated in this investigation. These dampers were attached to the test truss at midspan. The total power dissipated by the structure and each of the dampers was obtained from natural decay of amplitudes (see Fig. 5 for one case) and Eq. 3. The power dissipated by the structure itself (shown in Fig. 7) was subtracted from this total power to get the net power (also shown in Fig. 7) that was dissipated by one damper of each type. The power supplied by the wind is also given. Even without considering the damping from the structure, one damper of any of the types considered was sufficient to prevent detrimental vibration in the structure. At no time during the tests of wind-induced vibration was there an indication that the truss could vibrate in the wind when one damper of any type considered was at midspan of the truss. The truss with a damper at midspan was force-vibrated several times when winds were favorable for vibration to see if it was possible for the truss to sustain vibration. In each case the vibration quickly stopped after the oscillator was turned off.

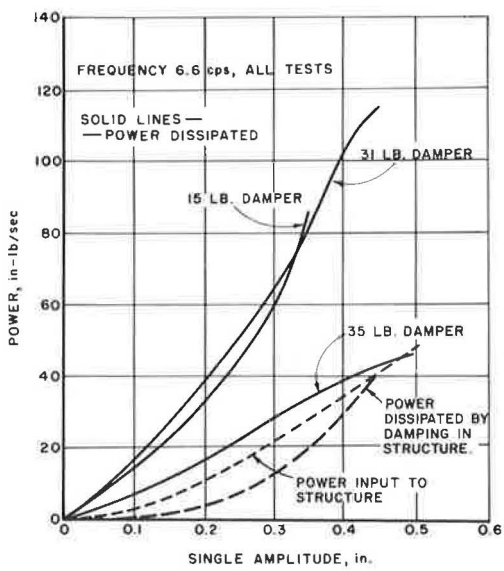

Figure 7. Damping 78-ft span structure.

DAMPING REQUIREMENTS FOR OTHER STRUCTURES

Figure 8 shows Eq. 2 in graphical form for quick calculation of power input from the wind to overhead sign trusses.

The natural frequency of the structure (first mode) can be estimated accurately without a detailed dynamic study by the use of the following equation (7):

$$f = \frac{3.55}{\sqrt{D}} \tag{4}$$

where

f = frequency, cps; and
D = maximum static deflection of truss under its own weight plus any weights that vibrate with it, in.

In calculating the dead-load deflection, pinned joints may be assumed. Normally, trusses are supported by end posts that are laced together. In these cases the trusses are essentially simply supported.

Laboratory tests were conducted to determine the effectiveness of the Stockbridge-type dampers shown in Figure 6 over the range of frequencies expected in overhead sign structures. The power dissipated by the damper was evaluated from the free vibration response of a beam. The power dissipated shown in Figures 9 to 11 was calculated using data from deflection-time traces and Eq. 3. The points for which test data were obtained were connected by smooth curves. The potential energy, U, used in this case was equal to the energy stored in the beam. Any energy stored in the damper itself was neglected. This provides conservative values for the power dissipated by the damper. Data for single amplitudes of vibration of about 0.6 in. or less were obtained. Dampers that are effective in this range of amplitudes will also prevent vibration at higher amplitudes.

Several structures with spans from 60 to 140 ft having various wind loadings and sign areas have been analyzed for damping requirements using the information shown in Figures 8, 9, 10, and 11. The power input from the wind was not large in any case and could be dissipated by one damper of the proper type. The 31-lb damper was relatively efficient for all cases considered

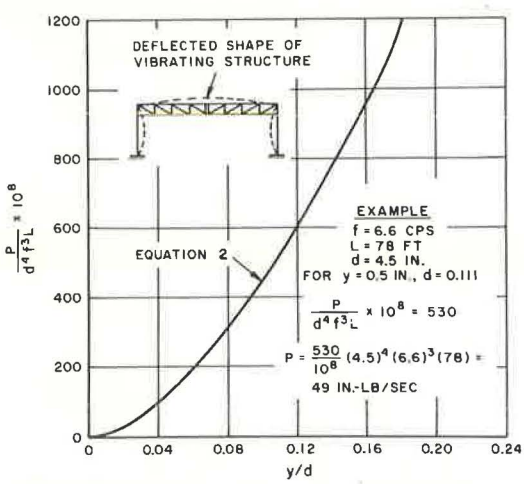

Figure 8. Power input from wind: Graphical representation of Eq. 2.

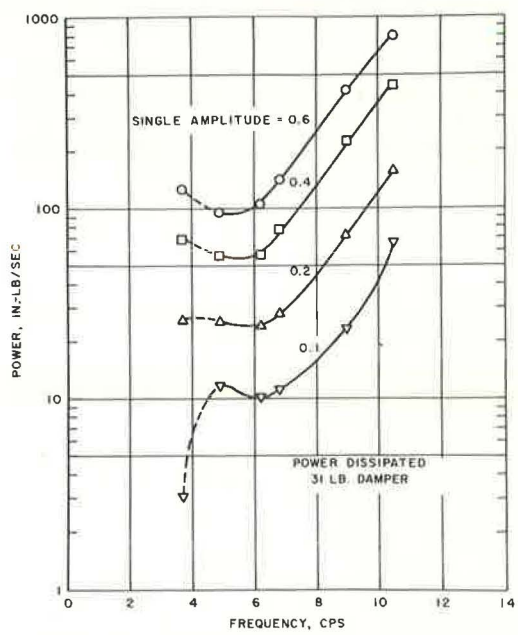

Figure 9. Power dissipated by 31-lb damper.

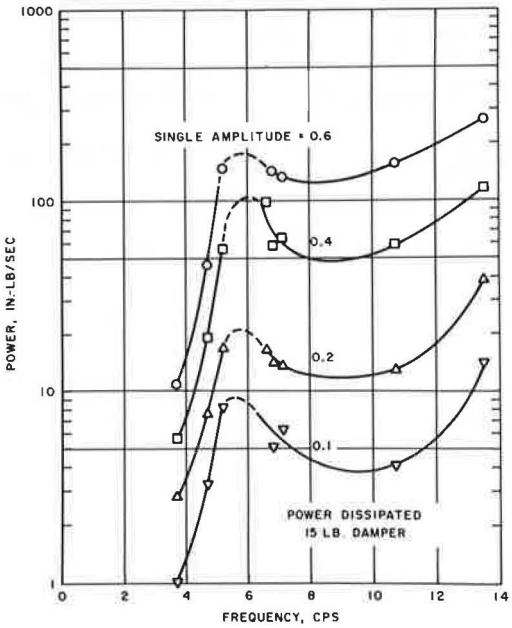

Figure 10. Power dissipated by 15-lb damper.

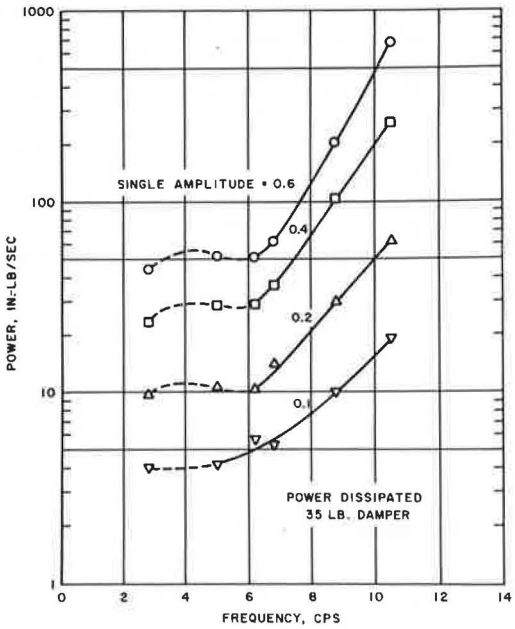

Figure 11. Power dissipated by 35-lb damper.

and thus would probably prevent wind-induced vibration in most overhead sign structures.

SUMMARY AND CONCLUSIONS

Static and vibration tests of a 78-ft span overhead sign structure have shown the following:

1. Fabrication stresses as high as 12,900 psi were developed in the truss chords as a result of mismatch of the bolting flanges. Peak stresses as much as 50 percent greater than average values were also measured during forced vibration. The addition of these to the unknown but ever-present residual welding stresses makes it clear that wind vibrations must be prevented in sign structures to avoid fatigue cracks.
2. The greatest response of the 78-ft span sign structure to wind occurred when velocities normal to the structure were between about 7 and 12 mph. The truss vibrated in its first mode at a frequency of 6.6 cps. Calculated wind velocity corresponding to vortex shedding from the chord members at this frequency is 9 mph.
3. Prevention of vibration in overhead sign structures requires sufficient external damping so that the sum of the power dissipated by the damper and that absorbed by the structure itself exceeds the power input from the wind. Power input by the wind can be predicted by Eq. 2 and the power absorbed by dampers can be determined from laboratory data such as that shown in Figures 9 to 11. It is conservative to neglect the damping provided by the structure in this type of calculation.
4. A single Stockbridge-type vibration damper, in either 15, 31, or 35-lb sizes attached to the test structure at midspan, prevented vibration in the wind. The middle size should be adequate for most sign trusses.

REFERENCES

1. Norris, Houser, Halley, Briggs, Namyet, and Minami. Structural Design for Dynamic Loads. McGraw-Hill Book Co., p. 437, 1959.
2. Rawlins, C. B. Recent Developments in Conductor Vibration Research. Alcoa Research Laboratories Tech. Paper No. 13, 1958.

3. Scruton, C., and Flint, A. R. Wind-Excited Oscillations of Structures. Proc. Inst. of Civil Engineers (London), Paper No. 6758, Vol. 27, 1964.
4. Farquharson, F. B., and McHugh, R. E. Wind Tunnel Investigation of Conductor Vibration With Use of Rigid Models. AIEE Trans., Pt. 3, Power Apparatus and Systems, Oct. 1956.
5. Farquharson, F. B. Wind Forces on Structures: Structures Subject to Oscillation. Jour. Structural Div., Proc. ASCE, July 1958.
6. Weaver, W. Wind-Induced Vibration in Antenna Members. Jour. Eng. Mech. Div., Proc. ASCE, Feb. 1961.
7. Alcoa Structural Handbook. Aluminum Co. of America, Pittsburgh, 1960.