Some Electronic Measurements of Macroscopic Traffic Characteristics on a Multilane Freeway

KENNETH G. COURAGE, Senior Transportation Engineer, Kelly Scientific Corporation

This report deals with the measurement of the commonly sought characteristics of macroscopic traffic flow by means of automatic sensing equipment using a high-speed digital computer for data collection and analysis. Independent measurements of speed, density, flow, and kinetic energy are obtained from ultrasonic presence detectors and from an optical speed trap. The results are combined to produce composite measurements where possible. The ability of each measurement technique to produce reasonable values is analyzed by linear regression, and the conformance of the data to accepted traffic flow theories is discussed. Finally, some thoughts on the application of these results are explored.

•TRAFFIC operational studies usually require some form of data input. In general, the more complex the study, the greater the need for automation in the collection and processing of data. The digital computer has solved most of the processing problems; however, the techniques of collecting much of the required information are still somewhat primitive. The measurement system described in this report is indeed primitive; nevertheless, it does offer some potential in traffic measurements.

The traditional macroscopic descriptors of traffic movement are speed, flow rate, and density. These variables are related by definition such that any one quantity may be calculated in terms of the other two. This relationship is

$$Q = KU$$

where

Q = the number of vehicles passing a given point on the freeway per unit of time,
K = the equivalent density of the traffic stream, and
U = the space mean speed of the traffic stream.

Thus, to obtain a complete picture of the traffic stream, it is necessary to measure flow and speed, flow and density, or density and speed. In this section two measurement techniques will be considered. The first employs "off-the-shelf" presence detectors and involves measurement of flow and density (estimated from detector occupancy) to arrive at a calculated speed. The second uses an optical speed trap from which measurements of speed and density (also estimated from occupancy) are obtained. In this case the calculated variable is flow.

Optical speed traps have been used successfully in the past in single-lane traffic flow measurements. Speeds and densities have been measured in the Holland Tunnel and used as a basis for evaluation of operation and control of access (1). A similar system has also been employed in the calibration of a speed trap using two magnetic loop detectors (2).

Paper sponsored by Committee on Characteristics of Traffic Flow and presented at the 48th Annual Meeting.

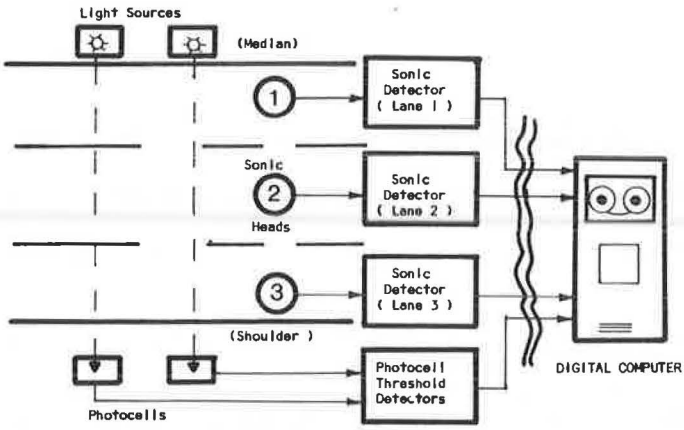

Figure 1. Layout of measurement system.

In approaching this problem, the operation of the measurement station will first be considered. This station will comprise one optical speed trap and three presence detectors (one per lane) of the ultrasonic type. The potential applications in the measurement of a number of parameters will then be examined and some experimental results will be presented. A more detailed analysis of these results will follow, and, finally, some surveillance and control applications will be discussed.

THE MEASUREMENT SYSTEM

The measurement system used in the collection of data is shown in Figure 1. The sensors were installed on the John C. Lodge Freeway at the Calvert Avenue overpass.

Figure 2 shows the time relationships of the relay closure signals generated by the interruption of the two beams. The following terminology is established as a basis for further discussions:

S = spacing between upstream and downstream detectors (ft);
T_i = occupancy time for i th platoon on upstream detector (sec);
T'_i = occupancy time for i th platoon downstream detector (sec);
α_i = travel time between detectors for leading edge of platoon i (sec);
β_i = travel time between detectors for trailing edge of platoon i (sec); and
G_i = length of gap following T_i (sec).

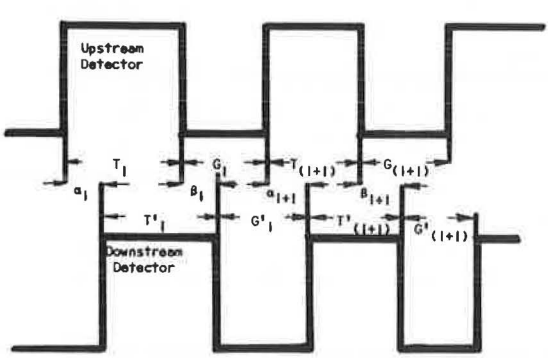

Figure 2. Time relationships for optical speed traps.

These definitions apply to individual measurements on the i th platoon. For the purposes of this analysis, each separate interruption of the beam by one or more vehicles is considered to constitute a distinct platoon.

The system under consideration will provide independent measurements of all three of the macroscopic variables, and will afford a means of validating a number of calculations based on the known relationships between these variables.

Some further definitions describing the sample measurements are required:

M (min) = sampling period;
U_S (mph) = speed as measured by sonic detectors;

times the square of the velocity" (4). In this case, the mass is proportional to the density of the stream and, therefore, the energy may be estimated using the relationship

$$E = KU^2$$

or, in terms of the measurement system under consideration,

$$E_C = Q_S U_O$$

Independent energy calculations may be obtained by using detector occupancy as an indicator of density. Separate estimates may be calculated from the optic and sonic detectors, and the appropriate calculations are

$$E_S = \frac{Q_S{}^2}{O_S} \text{ (sonic)}$$

and

$$E_O = U_O{}^2 \cdot O_O \text{ (optic)}$$

Acceleration Measurements

Acceleration is somewhat more difficult to calculate, for two reasons. First, extreme accuracy is required in the measurement of occupancy and elapsed times because even the largest practical values of acceleration would only produce minute differences in speed over a reasonable length of speed trap (5). Second, the computed values would only be valid for platoons containing a single vehicle because the basis for computation would be the change in speed between the leading and trailing edges of the platoon. Because of this second problem, some additional logic would be required to eliminate multiple-vehicle platoons and, of course, this would reduce the sample size considerably, particularly during periods of congested operation. For these reasons, acceleration measurements are considered beyond the capability of the system under consideration.

PLATOON CHARACTERISTICS

Prior to evaluation of the various measurements obtained from the system, it was necessary to examine the platoon characteristics observed under high densities to ensure that the multiple-lane operation would not seriously reduce the sample sizes involved in the speed calculations. It was observed that, under capacity flow conditions in the order of 100 vehicles per minute (three lanes), platoon counts ranging from 60 to 80 per minute were obtained. Under heavily congested operation with average speeds close to 10 mph, the flow rate dropped to approximately 60 vehicles per minute and the platoon counts were reduced to about 30 per minute. The standard deviation of the individual speeds was fairly consistent at about 5 mph, giving a 95 percent statistical confidence interval of approximately ±0.5 mph at capacity flow. This figure increased to about ±1 mph under severe congestion.

OBSERVATIONS

The data obtained under two separate days of operation (one "wet" and one "dry") are shown in Figure 3 in the form of an energy-momentum comparison. The actual measured values of speed and flow were used in this comparison as opposed to the calculated values (i.e., U_O and Q_S as opposed to U_S and Q_O). The energy value was calculated as the product of speed and flow.

It is noted that the observed relationships between the variables agree closely with the theoretical relationships developed in more detail by Drew and Keese (4).

U_O (mph) = speed as measured by optic detectors;
Q_S (veh/min) = flow as measured by sonic detectors;
Q_O (veh/min) = flow as measured by optic detectors;
O_S (percent) = detector occupancy as measured by sonic detectors;
O_O (percent) = detector occupancy as measured by optic detectors;
E_S (veh-mi/hr^2) = kinetic energy as measured by sonic detectors;
E_O (veh-mi/hr^2) = kinetic energy as measured by optic detectors;
E_C (veh-mi/hr^2) = kinetic energy as calculated by composite measurements; and
K (veh/mi) = density as calculated by composite measurements.

Flow Measurements

Direct measurement of flow (Q_S) may be obtained by summing the output pulses received from the presence detectors over the sampling period. An independent estimate of flow (Q_O) may be obtained from the speed trap by calculation, using the product of the measured speed by the density (estimated from occupancy).

Speed Measurements

The speed trap formed by the two beams will produce accurate speed measurements. Individual speeds may be calculated as

u_{Li} = speed of leading edge = S/α_i ft/sec; and
u_{Ti} = speed of trailing edge = S/β_i ft/sec.

Mean speeds over a given sampling period are more likely to be required in connection with the operation of a surveillance system than individual speeds. Again, two independent estimates are possible. The first is a direct measurement of space mean speed from the speed trap (U_O) where

$$U_O = \frac{QS}{\sum_{i=1}^{Q} \alpha_i}$$

The second is calculated from the presence detectors using the relationship

$$U_S = \frac{Q_S}{O_S}$$

Density Measurements

In the case of density measurements, three independent estimates are possible. The detector occupancy values obtained from both the optic and sonic sensors (O_O and O_S, respectively) can provide reasonable indications of density. A further measurement, K, may be obtained, using independent values of speed and flow, from the relationship

$$K = \frac{60 Q_S}{M U_O} \text{ (vehicles per mile)}$$

It is important to note that, although density is expressed in terms of vehicles per mile, these dimensions represent an equivalent "point" density over a finite time interval as opposed to an instantaneous density over a finite space interval. This concept is explained in greater detail by Edie (3).

Energy Measurements

Using the analogy between traffic flow and hydrodynamic flow, the energy or "dynamic pressure" of the traffic stream may be expressed in terms of the classical "mass

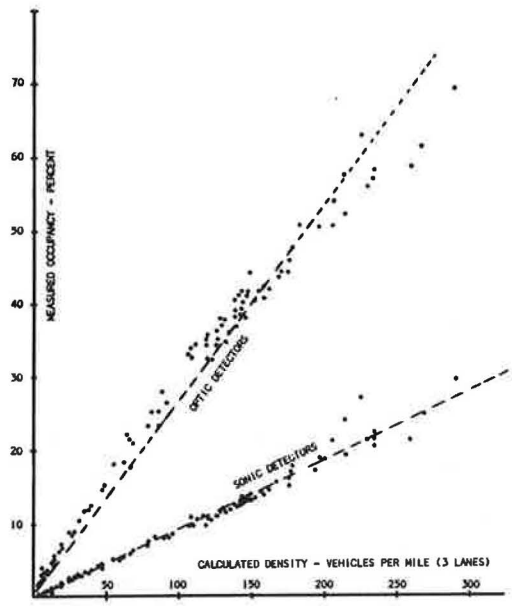

Figure 4. Measured occupancy vs calculated density for optic and sonic detectors.

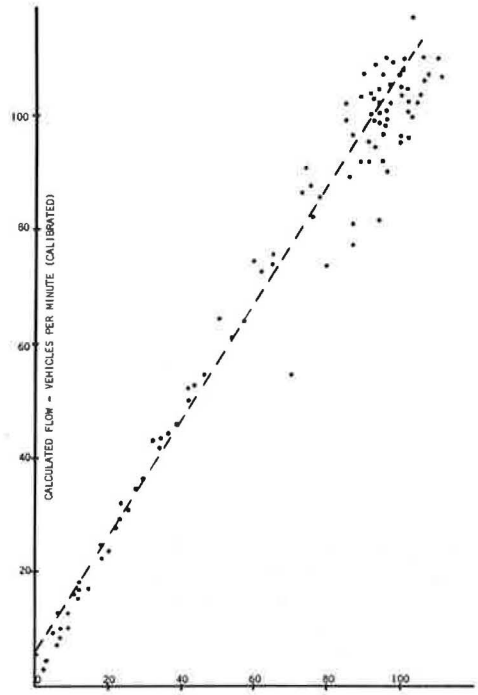

Figure 5. Calculated flow (optic detectors) vs measured flow (sonic detectors).

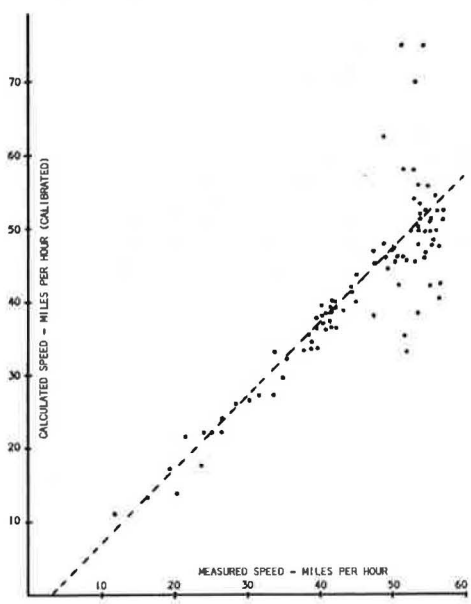

Figure 6. Calculated speed (sonic detectors) vs measured speed (optic detectors).

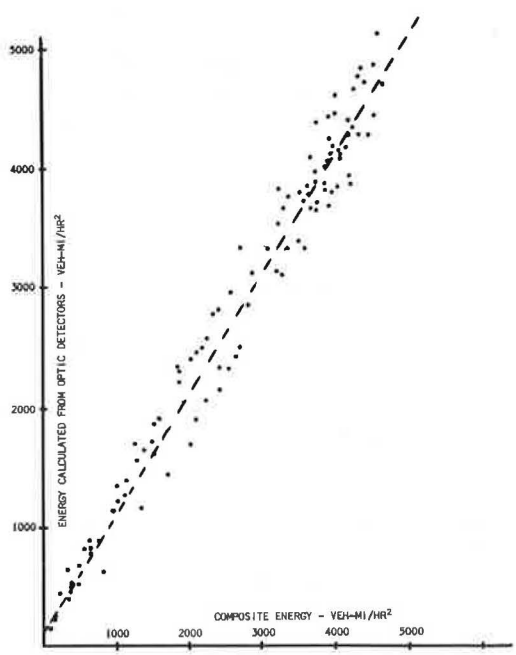

Figure 7. Energy calculated from composite measurements vs energy calculated from optic detectors.

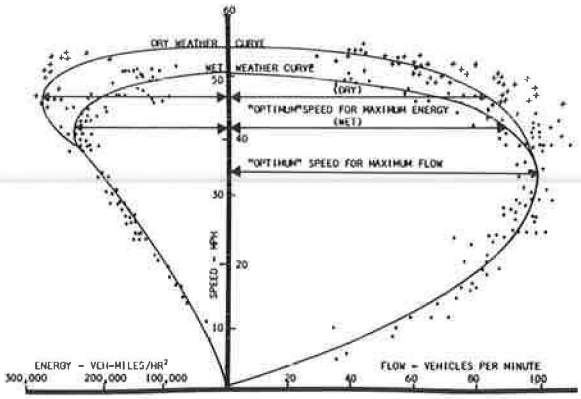

Figure 3. Energy-momentum comparison for wet and dry pavement.

The four measured quantities (U_O, Q_S, O_O, and O_S) provide the basis for calculation of the remainder of the ten quantities previously described. A summary showing the manner in which each quantity was derived is given in Table 1.

A number of these values involve independent measurements of the same quantity, and direct comparison should therefore provide an evaluation of these measurements. Linear regression analysis was performed on six sets of measurements expecting, of course, a straight line emanating from the origin. The results of these analyses are given in Table 2 and Figures 4 to 8, inclusive. Table 2 indicates, for each comparison, the intercept and correlation index, r^2. The figures show the actual data points along with the regression line.

It is observed that excellent correlation is obtained in all cases except one, optic speed vs sonic speed. The reason for the lack of agreement is apparent in Figure 6, in which a wide range of sonic speeds is obtained over a very narrow range of optic speeds at the upper limit. There are two reasons for this. First, lower flow rates are obtained in the upper speed ranges and the reduced sample sizes do not "average out" as well. Second, the sonic units employ distinct pulses (20 per second) in the detection of vehicle presence and, therefore, a fixed scanning error is introduced, which becomes clearly more significant as speed increases. This problem is treated in detail by Weinberg and Deleys (6).

No attempt was made in this case to force the linear relationships through the origin, since the primary interest lies in

TABLE 1

DETERMINATION OF INDIVIDUAL TRAFFIC CHARACTERISTICS

Quantity	Significance	Methods of Determination
U_O	Speed from optics	Measured
Q_S	Flow from sonics	Measured
O_O	Occupancy from optics	Measured
O_S	Occupancy from sonics	Measured
U_S	Speed from sonics	Q_S/O_S
Q_O	Flow from optics	$U_O \cdot O_O$
K	Calculated density	Q_S/U_O
E_O	Energy from optics	$O_O \cdot U_O^2$
E_S	Energy from sonics	Q_S^2/O_S
E_C	Composite energy	$Q_S \cdot U_O$

TABLE 2

COMPARISON OF MEASURED AND CALCULATED VALUES

Comparison	Intercept (% of upper limit)	Correlation Index (r^2)
K vs O_O	4.3	.976
K vs O_S	-0.6	.980
Q_S vs Q_O	5.0	.972
U_O vs U_S	-4.8	.640
E_C vs E_O	3.2	.972
E_C vs E_S	-0.4	.990

$$E = K\left(U_f^2 - \frac{2\,KU_f^2}{K_j} + \frac{K^2U_f^2}{K_j^2}\right)$$

$$= KU_f^2 - \frac{2\,K^2U_f^2}{K_j} + \frac{K^3U_f^2}{K_j^2}$$

$$= U_f^2\left(K - \frac{2\,K^2}{K_j} + \frac{K^3}{K_j^2}\right)$$

To maximize E

$$\frac{dE}{dK} = 1 - \frac{4K}{K_j} + \frac{3K^2}{K_j^2} = 0$$

Using the quadratic formula, the roots will be located at

$$E = \frac{\dfrac{4}{K_j} \pm \sqrt{\dfrac{16}{K_j^2} - \dfrac{12}{K_j^2}}}{\dfrac{6}{K_j^2}}$$

$$E + \frac{\dfrac{4}{K_j} \pm \sqrt{\dfrac{4}{K_j^2}}}{\dfrac{6}{K_j^2}} = \frac{\dfrac{4}{K_j} \pm \dfrac{2}{K_j}}{\dfrac{6}{K_j^2}} = \frac{6}{K_j} \cdot \frac{K_j^2}{6} = K_j \text{ (trivial)}$$

and

$$\frac{2}{K_j} \cdot \frac{K_j^2}{6} = \frac{K_j}{3}$$

which we will define as K'_m. The corresponding speed value will be $U'_m = \frac{2}{3}\,U_f$.

Thus, the maximum energy is obtained at $U'_m = \frac{4}{3}\,U_m$ and $K'_m = \frac{2}{3}\,K_m$. Its maximum normalized value is

$$E = \tfrac{2}{3}\,K_m \cdot (\tfrac{4}{3}\,U_m)^2$$

$$= \tfrac{27}{32}\,K_m U_m^2$$

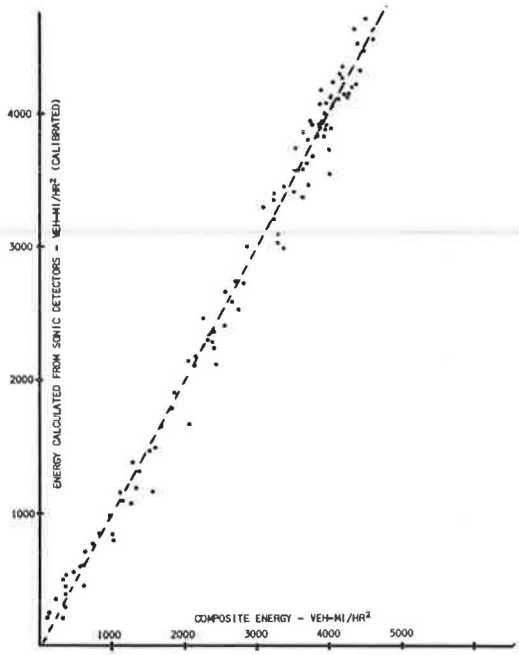

Figure 8. Energy calculated from composite measurements vs energy calculated from sonic detectors.

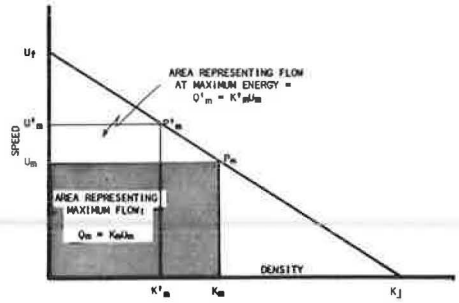

Figure 9. Linear speed-density model.

the middle of the occupancy range. It is noted, however, that in all cases the calculated intercept is very close to zero.

THE LINEAR SPEED-DENSITY MODEL

A single trip on the freeway is sufficient to decide that speed decreases with increasing density, and a number of models describing this relationship have been formulated. The speed-density model to be used in this analysis was first proposed by Greenshields (7). This model assumes a linear relationship given by

$$U = U_f(1 - K/K_j)$$

where U and K have already been defined as the appropriate speed and density values; U is the "free speed", i.e., the speed at which traffic would theoretically move no density or legal constraints; and K_j is the "jam density", i.e., the density at which traffic would (again theoretically) grind to a complete halt. Neither of these operating points are likely to be observed in practice; however, the linear model will be shown to provide useful application over a fairly wide range of values in between.

Figure 9 shows the linear model in graphical form and illustrates that, for any point, P at K and U, the flow Q is represented by the area OKPU (since Q = KU). It is also apparent that the maximum Q will be attained at K - ½ K_j and U = ½ U_f. Using the subscript m to denote these values, the relationship $Q_m = K_m U_m$ establishes a means for estimating the capacity at a particular location.

It should be noted that all of these values apply only to maximization of flow. A corresponding set of points could, however, be derived for the maximization of energy using this model. Remembering that

$$U = U_f\left(1 - \frac{K}{K_j}\right) = U_f - \frac{KU_f}{K_j}$$

and

$$E = KU^2 = K\left(U_f - \frac{KU_f}{K_j}\right)^2$$

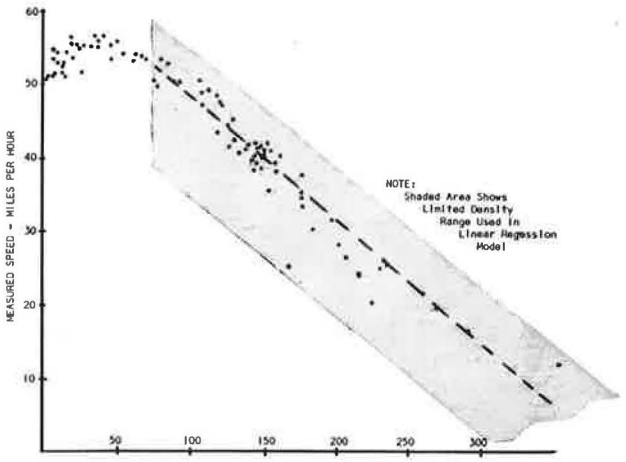

Figure 10. Speed-density curve for composite measurements.

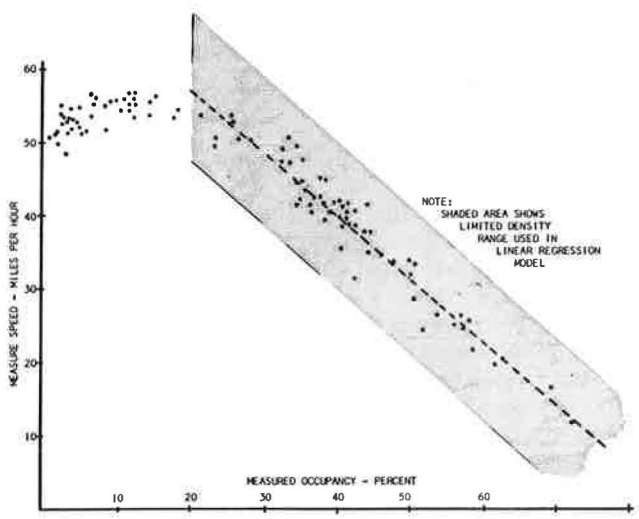

Figure 11. Speed-occupancy curve for optic detectors.

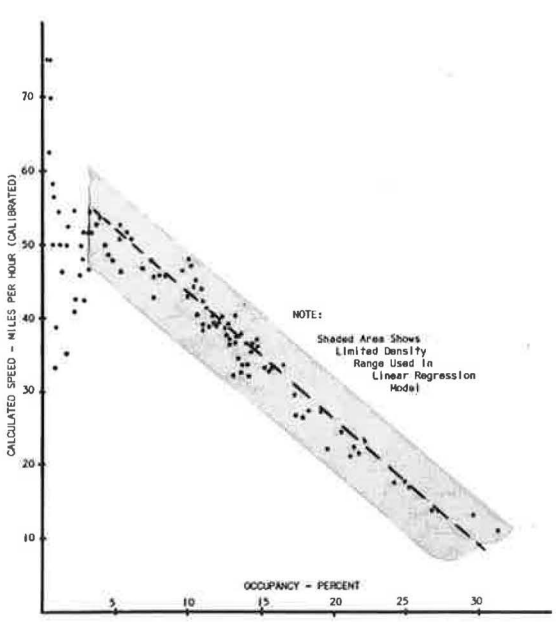

Figure 12. Speed-occupancy curve for sonic detectors.

TABLE 3

SUMMARY OF MACROSCOPIC CHARACTERISTICS ESTIMATED BY LINEAR REGRESSION

Characteristic	Units	K vs U_o	O_o vs U_o	O_s vs U_s
Free speed	mph	65.6	74.4	60.0
Jam density	veh/lane-mi	128	110	125
Optimum speed	mph	32.8	37.2	30.0
Optimum density	veh/lane-mi	64	55	62.5
Capacity	veh/min	105	107	96
Maximum energy	veh-mi/hr^2	58,000	64,000	47,500
Correlation index	—	.942	.948	.948
Figure	—	10	11	12

Applications of the Linear Model

A linear regression analysis was performed on the independent measurements that relate to the speed-density curve.

Figures 10 through 12 show the individual data points plotted for the three relationships, U_o vs O_o, U_s vs O_s, and U_o vs K. These relationships are clearly not linear, and this is not surprising because the speeds are expected to be independent of density in the lower density ranges (i.e., near the speed limit).

More meaningful conclusions can be drawn from a limited density model that appears to be fairly linear throughout the usual range of operation of a surveillance and control system. The regression analysis was, therefore, performed using only those points with density greater than 25 vehicles per lane mile.

Table 3 gives the results of the speed-density regression in terms of free speed, jam density, capacity, optimum density, optimum speed, and correlation index. It is observed that, within the limited density, the model in all three cases appears to fit the assumption of linearity, giving reasonable values for optimum speed, optimum density, and capacity, and exhibiting fairly good correlation. In the case of the sonic speed vs sonic occupancy, a similar scattering of points is noted at higher speeds as was previously observed.

TABLE 4

NORMALIZING VALUES FOR CALCULATIONS USED IN THE FREEWAY SURVEILLANCE AND CONTROL LOGIC

Estimated Quantity	Actual Units	Freeway Location				
		Edsel Ford	Seward	Chicago	Calvert	Glendale
Free speed, U_f	Vehicles per minute per percent occupancy	5.10	9.48	6.42	10.02	10.38
Optimum speed, U_m	Vehicles per minute per percent occupancy	2.55	4.74	3.21	5.01	5.19
Jam density, K_j	Percent occupancy	55	33	54	39	38
Optimum density, K_m	Percent occupancy	27.4	16.6	28.0	19.5	18.9
Capacity, Q_m	Vehicles per minute	70	105	90	97	98
Maximum energy, E_m	Vehicles^2 per minute^2 per percent occupancy	211	587	335	580	593
Flow at E_m, Q'_m	Vehicles per minute	62	93	80	87	87

This linear model is not intended to negate the more advanced theories that have been proposed to describe the speed-density relationship. It is not felt, however, that sufficient data have been collected to explore the various "multi-regime" theories (8), nor was the sampling interval short enough to examine such concepts as hysteresis (9). The investigations reported herein were undertaken primarily to support certain other research activities and have proved useful in this regard.

As a direct application of these techniques to the John C. Lodge Freeway surveillance and control system, Table 4 gives the values of the various macroscopic parameters derived for all of the measurement stations on the Freeway. The figures given for the sonic detectors are uncalibrated; i.e., the speeds are represented by the proportional value of Q/O. No calibration is required in this case because the surveillance system employs only normalized speed values in the computations. In the case of the two optic units, calibration by manual counting was required to give an actual flow value since compatibility with other flow measurements was essential to the computations.

SUMMARY AND CONCLUSIONS

The simultaneous measurement of speed, flow, and occupancy at the same point on the freeway using the two techniques described herein supports the following conclusions:

1. A very close relationship exists between equivalent vehicular density (vehicles per mile) and percentage of roadway occupancy measured by both methods;
2. This relationship may be used to calculate reasonable mean values of flow from the optic speed measurements and speed from the sonic flow measurements over a 1-minute sampling period, within the density range normally experienced during peak period operation;
3. Reasonable estimates of mean kinetic energy may also be obtained using either measurement technique, over the same time interval; and
4. Within the limited depth of the analysis, the linear speed-density model, when applied to the observed data, produced results that appear to be useful to the operation of the present freeway surveillance and control system.

ACKNOWLEDGMENTS

This study was carried out under NCHRP Project 20-3 by the Texas Transportation Institute, where the author, who was the principal investigator, worked as an assistant research engineer. He wishes to thank the Detroit-based staff of the Texas Transportation Institute as well as the Michigan Department of State Highways staff assigned to the surveillance project for their help in performing these studies. Messrs. Gordon Paesani, Terry Cox and Ed Podany did a commendable job of computer programming, and Mr. Darrell Campbell's efforts in the installation of equipment were greatly appreciated.

Special appreciation is extended to Dr. Joseph A. Wattleworth, Vice President of Kelly Scientific Corporation and formerly head of the Traffic Systems Department of the Texas Transportation Institute, for his frequent advice and assistance.

REFERENCES

1. Foote, R. S., and Crowley, K. W. Developing Density Controls for Improved Traffic Operations. Highway Research Record 154, p. 24-37, 1967.
2. Stern, S. Traffic Flow Data Collection Using Magnetic-Loop Vehicle Detectors. Highway Research Record 154, p. 38-52, 1967.
3. Edie, L. C. Discussion of Traffic Stream Measurement and Description. The Port of New York Authority, Rept. 63-1, 1964.
4. Drew, D. R., and Keese, C. J. Freeway Level of Service as Influenced by Volume and Capacity Characteristics. Texas Transportation Institute, Research Rept. 24-3, 1965.

5. Matson, T. M., Smith, W. S., and Hurd, F. W. Traffic Engineering, McGraw-Hill, 1955.
6. Weinberg, M. I., Deleys, N. J., and Schneeberger, R. R. Surveillance Methods and Ways and Means of Communicating With Drivers. NCHRP Report 28, 1966.
7. Greenshields, B. D. A Study of Traffic Capacity. HRB Proc. Vol. 14, p. 448-477, 1934.
8. Drake, J. S., Schofer, J. L., and May, A. D., Jr. A Statistical Analysis of Speed Density Hypotheses. Highway Research Record 154, p. 53-87, 1967.
9. Blunden, W. R. Capacity of Highways—Some Fundamental Considerations. Proc. 35th Annual Meeting, Institute of Traffic Engineers, 1965.

Discussion

R. DUSTIN ARNOLD, Texas Instruments Incorporated—The data collection system described by Courage makes use of a multichannel communication link and a general purpose digital computer, something which many researchers cannot afford. Such basic traffic data have great utility and, if they were more easily obtainable, sufficient data could be obtained in many cities on many facilities. Such traffic data have long been sought by traffic engineers and researchers. The following discussion presents an alternative data collection system designed for this same purpose, and represents a significant reduction in cost while still having a fair amount of flexibility. It provides speed, flow rate, and density measurements over variable time periods and is small enough so that it can be moved from site to site in a small van. Final output format as presently conceived is printed paper tape, which can be accumulated and analyzed when convenient.

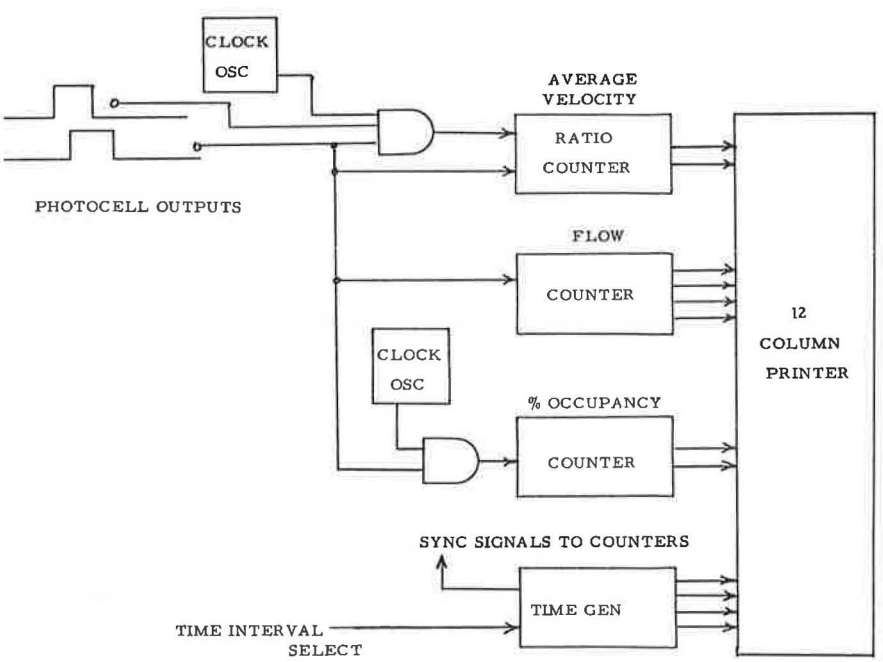

Figure 13. Measurement system.

The Measurement System

The suggested measurement system shown in Figure 13 uses the outputs of of photocell detectors to derive flow, density, and speed. The photocell outputs control general-purpose electronic counters whose outputs are connected to a paper tape printer, the final data being properly identified and timed. Density is expressed as percent occupancy, flow as vehicles per hour, and average velocity as miles per hour. The measurement period suggested here is 5 minutes and 1 minute (switch selectable), but any shorter or longer periods could be used with the appropriate change in the time base and clock oscillators. The resultant typed answers on the paper tape are a permanent record of the traffic movement in units that the traffic researcher can easily use. A typical typed output format is shown in Figure 14.

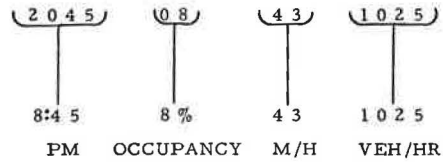

Figure 14. Typical data printout.

Traffic Flow

The photocell output is used to trigger an ordinary event counter to register total vehicles per sample period. An external time base is used to control gate period, allowing averaging over whatever time period the researcher desires.

Speed Measurement

Speed measurements would be made in a manner similar to that suggested by Courage, utilizing the overlapping portion of the two photocell outputs to gate on a clock frequency. The total clock counts are summed in the B portion of a ratio counter, while total vehicle passages are summed in the A portion, the resultant output being A/B, which is proportional to velocity. The setting of the clock frequency introduces a constant factor that takes into consideration the photocell spacing. The following relationship holds true:

$$V = \frac{S\ J\ 10^5}{C}$$

in which V = average velocity, mph; S = photocell spacing; J = number of vehicles in measurement period; and C = sum of counts of gated clock. Clock frequency is as follows:

$$f_{clock} = \frac{5280}{3600} \times \frac{10^6}{S}$$

where S = photocell spacing in feet. The velocity readout is then the average velocity of all the vehicles that passed by within the selected sample period.

The very portable system described here could be used to measure actual speed, flow, and occupancy at any location the traffic researcher desires. The overall cost of the system would be around $5000 and would provide plentiful and accurate data. It is hoped that the author accepts this suggested system as a flexible and economic means of continuing research in this area.

KENNETH G. COURAGE, Closure—The author would like to thank Mr. Arnold for his interest in the data acquisition system and for his constructive thoughts on a portable and practical measurement technique. The data on which the studies were based were collected using a multipair cable connected directly to a digital computer. This method has many advantages, including the capacity for real-time use of the information in the

ramp metering control logic. (This feature has now been incorporated into the control system.) There is no question, however, that a less costly system would be extremely useful in a variety of basic and applied research studies.

Regarding the measurement of flow, the technique proposed by Mr. Arnold would simply sum the output pulses from one of the photocell units. Since we are generally dealing with a multilane freeway, the summation of pulses would only indicate how many platoons crossed the detector as opposed to the actual vehicle count. In the studies described in the paper, the flow was estimated from the product of speed and occupancy, and the results were verified by comparison with the sonic detector counts (see Fig. 5). It is unlikely that the necessary hardware multiplication would prove economical in a special-purpose digital device of the type proposed by Mr. Arnold; however, the necessary calculations could easily be performed off-line on a larger computer using the speed and occupancy information as inputs. The pulse counter could then be used for calibration of the output. A few hours of manual count data (collected in this case by connecting a hand switch to the pulse counter) could be used to determine the constants of a proportionality by linear regression. Experience with the John C. Lodge surveillance system suggests that 1 hour of manual data obtained separately under low, medium, and high densities would be adequate.

Once a calibrated model was available for a particular location, large amounts of data could be collected automatically for a variety of purposes, including bottleneck capacity estimation, investigation of the operational effects of geometrics and environmental conditions, and evaluation of traffic engineering improvements.