Bearing Capacity of Purely Cohesive Soils With a Nonhomogeneous Strength Distribution

CLARENCE H. C. JAMES, Howard University;
RAYMOND J. KRIZEK, The Technological Institute, Northwestern University; and
WALLACE H. BAKER, Soil Testing Española, S.A., Madrid, Spain

Based on published evidence, an empirical rule is postulated to describe the nonhomogeneous distribution of undrained shear strength with depth for a purely cohesive soil. With the use of this rule, the associated soil bearing capacity for a strip load of uniform intensity is determined for a variety of nonhomogeneous strength distributions, and the results are presented in a series of charts and an equation. For such soils, the bearing capacity is found to be strongly dependent on the width of the applied load, and to a lesser extent on the degree of overconsolidation of the upper zone. In most cases, bearing capacity values determined on the basis of the postulated strength distribution rule do not differ significantly from values obtained by a conventional analysis in which an "average" shear strength is assumed constant with depth; however, the proposed method affords greater reliability. It is felt that the results obtained can be reasonably extrapolated to loaded areas of different shapes.

•MOST currently used bearing capacity analyses employ the assumption that the soil is homogeneous with respect to its characteristic strength parameters. Although this is an entirely reasonable assumption in many cases, there are other situations where it is decidedly in error. In this work, a study is made of the effect of a nonhomogeneous strength distribution with depth on the bearing capacity of purely cohesive soils. Based on a postulated empirical strength distribution rule, the bearing capacity is determined by a minimization process applied to the equilibrium equation.

ASSUMPTIONS

The following assumptions are employed in this study:

1. A $\phi = 0$ analysis is valid, and potential failure surfaces are cylindrical in shape.
2. The nonhomogeneous in situ undrained shear strength distribution with depth obeys an empirical relation subsequently postulated.
3. The soil is isotropic with respect to its shear strength.
4. The applied surface load is of uniform intensity.

STRENGTH DISTRIBUTION WITH DEPTH

Published Evidence

The evidence gleaned over the years from examination of boring logs has led investigators to subscribe to the hypothesis that, in general, the in situ undrained shear strength, c_u, of a normally consolidated clay increases linearly with depth or with the

Paper sponsored by Committee on Mechanics of Earth Masses and Layered Systems and presented at the 48th Annual Meeting.

vertical effective normal stress, p, of the overburden; specifically, the shear strength ratio, c_u/p, is a constant. The undrained shear strength is usually determined by one or more of the following methods: (a) unconfined compression tests; (b) undrained triaxial tests on undisturbed samples at unaltered water content; (c) direct shear tests; or (d) directly in the field by vane shear tests.

Skempton (1, 2) attempted to correlate c_u/p with the plasticity index, I_P, and the liquid limit, w_L, of the soil, and he showed that some relation with I_P seemed to exist for normally consolidated marine clays. This latter correlation has proved to be convenient because it has been confirmed by sufficient field evidence to allow natural shear strengths of marine clays to be estimated for preliminary design purposes on the basis of simple laboratory tests. The Skempton relationship, discussed also by Terzaghi and Peck (3), is expressed as

$$\frac{c_u}{p} = 0.11 + 0.0037\ I_P \tag{1}$$

However, even for marine clays, caution should be exercised in the use of this relation because, as data published by Feyling-Hanssen (4) show, there may be large deviations from values given by Eq. 1, particularly when considering the effects of leaching.

Feyling-Hanssen (4) published an exhaustive study of the relationship of micropaleontology to the shear strength characteristics of Norwegian marine clays, and he showed that, on the basis of their content of the fossil Foraminifera, it is possible to divide some normally consolidated Norwegian marine clays into stratigraphic zones (strata). Since, in clays of similar mineral composition and grain size distribution, a close correlation exists between a given stratigraphic zone and the shear strength, any one stratigraphic zone can be related to a particular value of c_u/p. In many cases the clay in any one stratigraphic zone exhibits a greater c_u/p value in deposits near sea level than in deposits situated at a greater elevation; this phenomenon demonstrates the general relationship between the geotechnical properties of a clay mass and the reduced salt concentration in the porewater of the clay. Small values of c_u/p occur in relatively salt-free clays, whereas high c_u/p values are found in clays which have, more or less, retained their original salt concentration.

Wu (5) examined soil samples from four areas of the Great Lakes region of North America. These lakes were formed as a result of the activities of continental glaciers during Pleistocene times and a number of soft clay deposits extending to great depths are known to exist in areas formerly occupied by glacial lakes. Wu measured the shear strength of these clays by unconfined compression tests and by undrained triaxial tests and, at all sites, he found that there was a general tendency for the strength to increase with depth within each individual stratum. In some cases, relatively high strengths near the surface reflect the effect of overconsolidation. These results also showed that the overall trend is one of increasing c_u/p ratio with increasing values for the plasticity index; furthermore, the higher the sensitivity and the liquid limit of the clays, the lower was the c_u/p value. These latter clays exhibited a flocculent or honeycomb structure which is normally associated with random particle arrangement.

Kenney (6) further points out that, since the c_u/p ratio of clays is dependent on the clay fabric, the effective stress strength parameters, the history of the clay, and the method by which the shear strength is determined, it is strongly dependent upon the geological history of the soil. He contends that, because the magnitude of the Skempton (7) pore pressure coefficient, A, for a certain type of test reflects the rigidity and the resilience of the soil structure, and because these properties are dependent on the method of deposition of the soil particles and the nature of any subsequent physiochemical changes in these particles, A, and therefore c_u/p, is probably chiefly dependent upon the geologic history of the clay. Since I_P depends on the results of two empirical tests (the liquid limit and plastic limit tests), both of which are conducted on completely remolded soil, it is difficult to visualize a relationship that is generally reliable and, at the same time, as simple as Eq. 1.

Hansen (8) introduced the following expression for the in situ shear strength of a clay mass:

$$c_u = c_1 + \alpha_1 \gamma z \tag{2}$$

where c_1 and α_1 are soil parameters that must be determined empirically; α_1, which ranges in value between 0 and 0.3, is a function of the coefficient of earth pressure at rest, a "cohesion factor," the effective angle of internal friction, and a factor, λ, introduced by Skempton (9). Given the value of α_1, c_1 is chosen such that c_u will express the approximate vane strengths (or one-half the undrained compressive strengths) at different depths.

Empirical Strength Distribution Rule

Since the in situ undrained shear strength of a clay is often a function of depth, it is reasonable to postulate a simple, empirical strength distribution rule which contains soil parameters, which may be determined from standard laboratory tests, and empirical coefficients, which will insure a goodness of fit for the strength data from a given soil profile. Accordingly (Fig. 1), the total undrained shear strength, c_t, at a point located a vertical distance, z, below the ground surface may be expressed as

$$c_t(z) = c_o + (c_u/p)\gamma_b z + F\, c_o \exp\left[-(z/\alpha b)^n\right] \tag{3}$$

where γ_b is the submerged unit weight of the soil, c_o is the zero intercept on the strength axis of the linear portion of the composite strength curve, and F, α, and n are empirical coefficients, which are discussed subsequently. The empirical coefficients are dimensionless, and the other parameters must be expressed in a consistent set of units.

Over the years, the findings of many investigators have shown that, for normally consolidated and slightly overconsolidated clays, the most probable range of values for c_u/p is from 0 to 0.3, and these findings have been satisfactorily substantiated in this study through calculations of c_u/p from soil profiles and laboratory or field data found in the literature. The last term on the right-hand side of Eq. 3 reflects the condition of greater shear strength in the upper few feet of the clay as a result of overconsolidation due to dessication or fluctuation of the groundwater table. The role of F is to establish a maximum value for c_t at the upper surface of the overconsolidated zone; it is unreasonable to assume too high a value for F because a high degree of overconsolidation at the surface would probably cause surface cracks and preclude the existence of any strength in this region. From an examination of many soil profiles, it has been concluded that the most probable range for values of F is 0 to 2, with a maximum of 4. The coefficient α describes the attenuation rate of the effect of this assumed overconsolidation in the upper zone; for this study, values of α are assumed to range from 0.025 to 0.4. Practical estimates for α can be obtained by choosing the z/b value at which the strength difference between the curve describing the data and the extended straight-line portion of that curve is approximately equal to one-third of $F c_o$. The exponential coefficient n describes the manner in which the strength due to the assumed overconsolidation in the upper zone

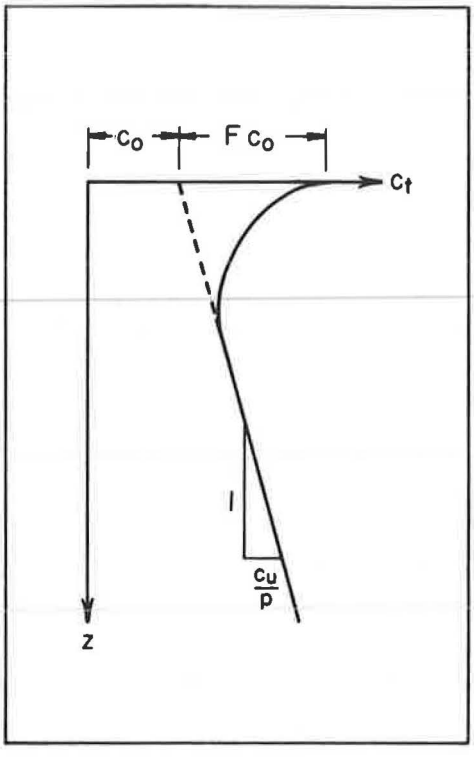

Figure 1. Assumed strength distribution with depth.

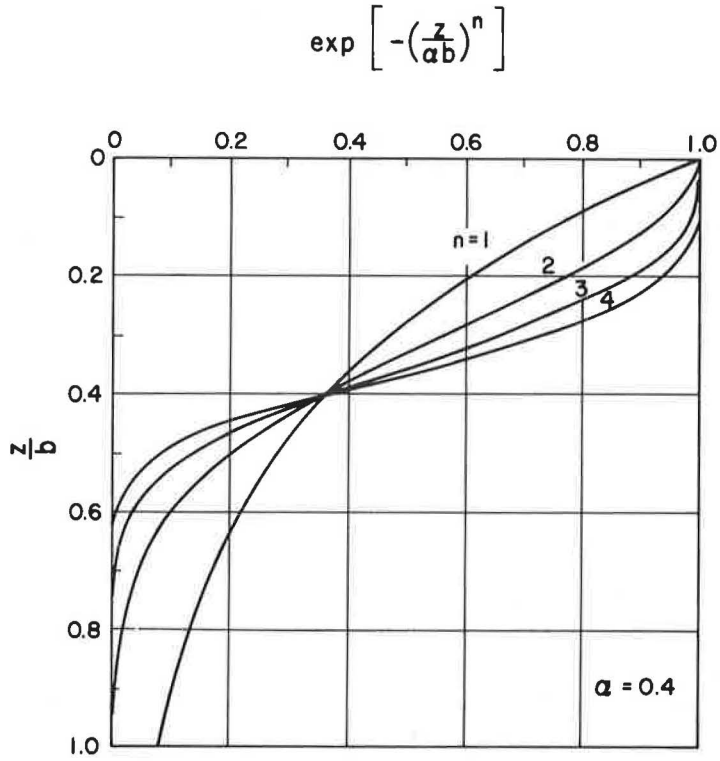

Figure 2. Effect of n on nature of strength variation in upper zone.

varies with depth. Typical variations for n = 1, 2, 3, and 4 are shown in Figure 2; however, a value of one was used in this work. Finally, a range of 500 to 4000 psf was chosen for c_o, and the total weight density was assumed to be 100 pcf.

The proposed strength distribution rule is general enough to include cases where the undrained shear strength is constant, increases, or decreases with depth. If c_u/p equals zero, the bearing capacity analysis will be similar to the conventional one, except that full consideration will be given to any condition of overconsolidation in the upper zone. When c_u/p and F both vanish, c_t equals c_o, which, in turn, equals the conventional constant cohesion parameter, c, for a homogeneous soil, and the procedure degenerates to a conventional $\phi = 0$ analysis. Difficulties in applying the postulated strength distribution rule in subsequent calculations are encountered when c_o vanishes; one practical way to avoid this problem is to decrease the slope, c_u/p, slightly so that c_o becomes greater than zero. However, in real soils the probability of c_o being equal to or less than zero is very small.

DETERMINATION OF BEARING CAPACITY

For a strip load of width, 2 b, applied to the surface of a purely cohesive soil whose undrained strength characteristics are represented by Eq. 3, the bearing capacity, q, based on the assumption of a cylindrical failure surface, can be determined by utilizing a minimization procedure in conjunction with the equilibrium equation. Figure 3 shows a typical failure surface for such a problem as stated above; although Meyerhof (10) cautioned that ". . . where the subsoil is neither homogeneous nor isotropic . . . the error . . . will increase with increasing inhomogeneity. . . ," the assumption of a cylindrical failure surface is justified on the bases that (a) it closely agrees with the Prandtl surface for the $\phi = 0$ case, (b) it has the advantage of simplicity from a computational standpoint, (c) it leads to bearing capacity values which are in general agreement with values calculated by more sophisticated methods, and (d) the effect of resulting

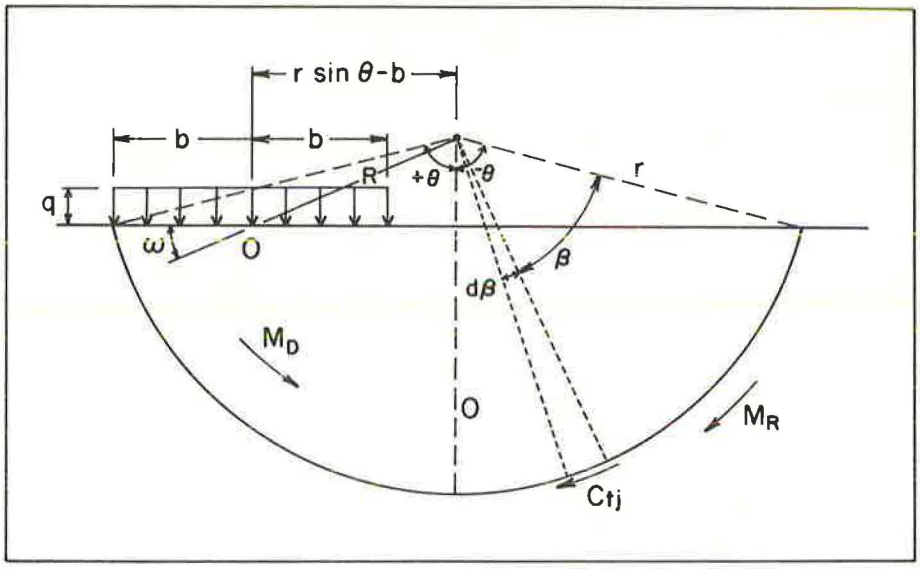

Figure 3. Assumed failure mechanism and notation.

inaccuracies is reduced because bearing capacity ratios or differences are considered. Two advantages of this assumption are that body forces are eliminated from the equilibrium equation and that the geometry is simple.

Equilibrium conditions dictate that the driving moment, M_D, must equal the resisting moment, M_R. Because of symmetry, the body forces cancel, and the driving moment is produced only by the load, while the resisting moment is developed by the shear strength of the soil along the potential failure surface. Referring to the geometry in Figure 3, we may write the equilibrium equation as

$$q\,(2\,b)(r\,\sin\theta - b) = r^2 \int_{-\theta}^{\theta} c_t\, d\beta \tag{4}$$

where c_t may be considered, in general, a function of r and β. If the arc length from $-\theta$ to θ is divided into m equal angular increments, $\Delta\beta$, and if the shear strength, c_t, is assumed to be a constant value, c_{tj}, over each increment of arc length, $r\,\Delta\beta$, Eq. 4 may be approximated by

$$q\,(2\,b)(r\,\sin\theta - b) = r^2 \sum_{1}^{m} c_{tj}\,\Delta\beta = 2\,r^2(\theta/m) \sum_{1}^{m} c_{tj} \tag{5}$$

which, when solved for q, becomes

$$q = \frac{r^2\theta}{b^2 m}\,\frac{1}{\frac{r\,\sin\theta}{b} - 1} \sum_{1}^{m} c_{tj} \tag{6}$$

Since c_{tj} is a function of r and β, q, as given by Eq. 6, is not a function merely of two variables, r and θ; hence, its evaluation cannot be made by the procedure of setting equal to zero the derivatives of the function with respect to r and θ, and finding the

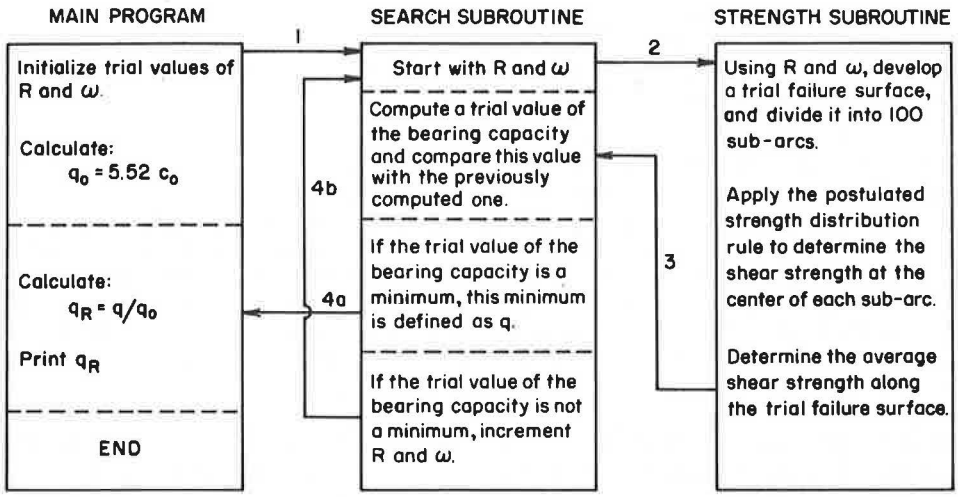

Figure 4. Flow diagram of computer procedures.

unique combination of r and θ that minimizes q. Instead, the function q is minimized by applying a modified version of the Direct Search technique discussed by Katz et al (11), Hooke and Jeeves (12), and Wilde (13).

In order to provide a basis for comparison of this bearing capacity with the more conventional bearing capacity determined by multiplying an "average" cohesion, c, by a bearing capacity factor, N_c, we assume that F and c_u/p are zero; hence, c equals c_o, and N_c equals 5.52. According to Taylor (14), this value of 5.52 for N_c is the same as that given by Fellenius for the case of a cohesive soil in which shear strength is independent of spatial coordinates; it can be derived analytically by solving Eq. 6 with c_{tj} equal to a constant, c, and defining N_c as q/c. If we differentiate N_c with respect to θ and with respect to r, and set each derivative equal to zero, simultaneous solution of the resulting two equations gives a relation between r and θ from which N_c can be evaluated. If q_c is defined as a reference bearing capacity value, given by

$$q_c = c_o N_c \tag{7}$$

we can define a dimensionless bearing capacity ratio, q_R, such that

$$q_R = q/q_c \tag{8}$$

Equation 8 gives the relation between the bearing capacity determined from the postulated strength distribution rule given by Eq. 3 and the bearing capacity determined by assuming a constant "average" cohesion given by c_o.

COMPUTER PROGRAM

Figure 4 is a flow diagram of the procedures followed in determining the bearing capacity as described herein.

Main Program

Choose as the initial values for r and θ those critical values which are associated with the conventional bearing capacity; the initial value of θ is approximately 66.6 deg; and the radius, r, is a function of θ and the half-width, b, of the proposed load. Instead of using r and θ as the independent variables, however, we choose R and ω; these variables are shown in Figure 3, and they have the advantage that the origin, O, remains fixed.

Subroutines for Modified Direct Search

From trigonometric relationships between r, R, θ, and ω, determine starting values of R and ω, and proceed as follows:

1. Enter the strength subroutine and select a trial failure surface.
2. Divide this trial failure surface arc into 100 sub-arcs and, by means of Eq. 3, determine the shear strength at the center of each sub-arc.
3. Determine the average shear strength along the entire trial failure surface.
4. Reenter the search subroutine and use Eq. 6 to compute the first trial value of q.
5. Sequentially increment R and ω in an exploratory move to establish the appropriate direction so that the new value of q will be less than or equal to the preceding value. If a positive increment does not produce the desired result, a negative increment is tried; if neither alternative succeeds, the variable is left unchanged and attention shifts to the next variable. Once the exploratory moves have established a direction, a pattern move is begun; this pattern move involves an increment which is the vector sum of the two preceding successful R and ω increments. If the pattern move is successful, the pattern step is doubled for the next move. If, during a pattern move, q increases beyond the preceding value, we retreat to the previous "base point" and initiate an exploratory move to build a new pattern. If this, too, is a failure, the magnitude of the increment is decreased and an attempt is made at a new exploratory move. The search terminates when the increment sizes fall below minimum values of R/8000 and ω/8000, or when the magnitude of the difference between the latest trial value of q and the preceding value is less than a minimum which was set at 0.001 times the preceding value of q. This minimum trial value is the bearing capacity q.
6. Return to the main program and compute q_R.

RESULTS

The soil bearing capacity was determined for applied load widths, 2 b, of 5, 10, 20, 40, 80, and 160 ft; for each case, the soil strength distribution was varied, the variations being reflected in different values of c_o (500, 1000, 2000, and 4000 psf), c_u/p (0, 0.1, 0.2, and 0.3), α (0.025, 0.1 and 0.4), and F (0, 1, and 4). Hence, bearing capacity values for 1,152 different cases were computed. Since it is not feasible to present individual results for each of these 1,152 cases, the following approximation has been developed.

For given values of c_o, c_u/p, and α, the difference between the bearing capacity for F equal to 0 and that for F equal to any other value up to 4 is approximately proportional to the value of F, that is,

$$q - q_0 \cong MF \tag{9}$$

where q_0 can be determined from the bearing capacity ratios, q_R, given in Figure 5, and M is a proportionality coefficient which, based on calculations for a variety of cases, is reasonably independent of c_o, c_u/p, and b, and can be approximated by

$$M \cong 0.2\, \alpha\, q_0 \tag{10}$$

As indicated by the combination of Eqs. 7 and 8, q, and in particular q_0, can be expressed as

$$q_0 = q_R\, q_c = q_R\, c_o\, N_c = 5.52\, q_R\, c_o \tag{11}$$

Finally, substitution of Eqs. 10 and 11 into Eq. 9 yields

$$q \cong 5.52\, q_R\, c_o\, (1 + 0.2\, \alpha\, F) \tag{12}$$

For the ranges of variables considered herein, it has been verified that Eq. 12 predicts to within about 2 percent the bearing capacity determined by the more sophisticated

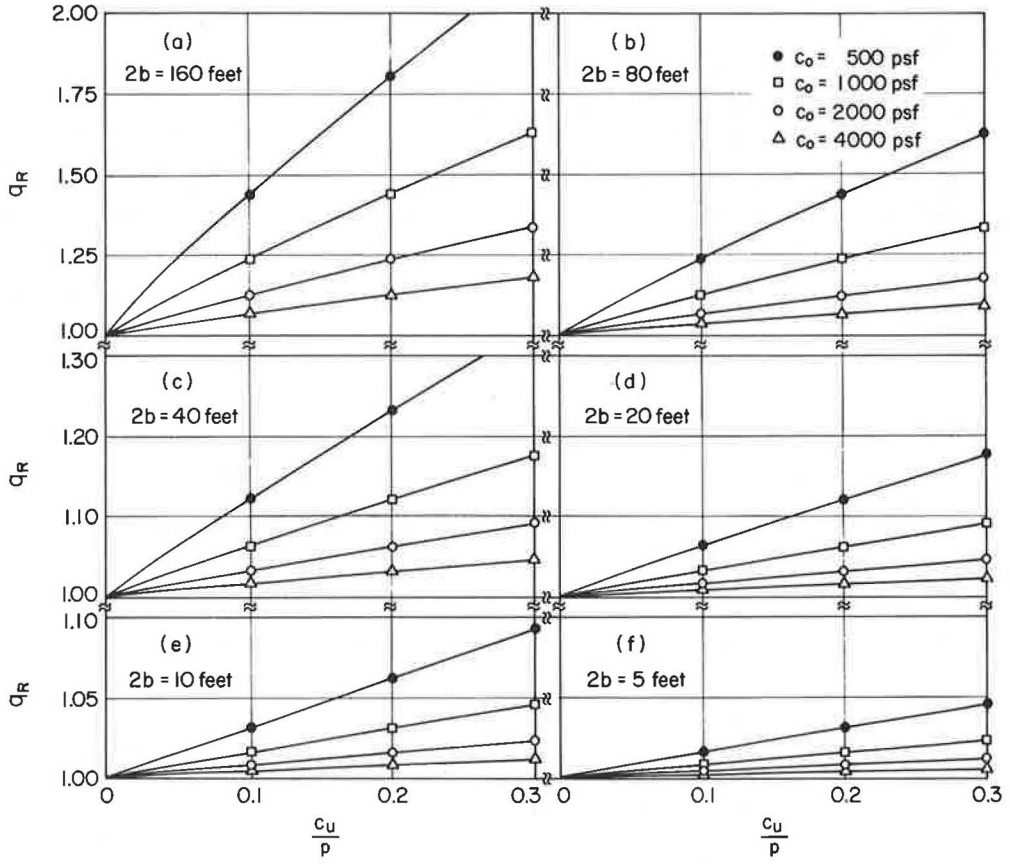

Figure 5. Bearing capacity ratios for F = 0.

procedure previously described. However, additional work has indicated that the bearing capacity determined by the use of an "average" shear strength that is constant with depth does not result in values significantly different from those obtained by this procedure.

The use of these results to determine the bearing capacity of a purely cohesive soil with a nonhomogeneous strength distribution of the type shown in Figure 1 may be explained as follows. The width of the load must be known, and c_o, c_u/p, α, and F (n is assumed equal to 1) must be estimated from a knowledge of the particular soil deposit under consideration or by describing laboratory or field test data with a curve similar to that shown in Figure 1. With a knowledge of 2 b, c_o, and c_u/p, a value for q_R is obtained from Figure 5; this value for q_R, together with the values for c_o, α, and F, is then substituted in Eq. 12 to determine the bearing capacity, q.

CONCLUSIONS

Based on a limited study of the bearing capacity of nonhomogeneous, purely cohesive soils subjected to a surface strip load of uniform intensity, the following conclusions may be drawn.

1. A reasonable approximation (within about 2 percent) of the soil bearing capacity under the conditions described can be simply and quickly obtained from a knowledge of the width of the loaded area and an estimate of the parameters describing the strength distribution with depth in the soil. Although the specific results herein were determined

for a strip load, it seems entirely reasonable that these results can be extrapolated with little error to other shapes of loaded area.

2. Use of a more sophisticated, empirical, undrained shear strength distribution rule, as opposed to the use of an "average" shear strength that is constant with depth, does not result in significantly different values for bearing capacity. However, an advantage of the proposed strength distribution rule is the increased degree of confidence it provides by representing more realistically the actual strength distribution in the field, and bearing capacity values determined on the basis of this rule should be more reliable than those resulting from the assumption of an "average" undrained shear strength.

3. The bearing capacity is found to be strongly dependent on the width of the applied load, and to a lesser extent on the effect of overconsolidation in the upper zone.

REFERENCES

1. Skempton, A. W. Vane Tests in the Alluvial Plain of the River Forth Near Grangemouth. Geotechnique, Vol. 1, No. 2, p. 111-124, London, 1948.
2. Skempton, A. W. Discussion on The Planning and Design of the New Hong Kong Airport. Proc. Institution of Civil Engineers, Vol. 7, p. 305-307, London, 1957.
3. Terzaghi, K., and Peck, R. B. Soil Mechanics in Engineering Practice. 2nd Ed., John Wiley, p. 117, 1968.
4. Feyling-Hanssen, R. Micropaleontology Applied to Soil Mechanics in Norway. Norwegian Geotechnical Institute, Pub. No. 20, 1957.
5. Wu, T. Geotechnical Properties of Glacial Lake Clays. Trans. ASCE, Vol. 125, p. 994-1012, 1960.
6. Kenney, T. C. Discussion of Geotechnical Properties of Glacial Lake Clays. Trans. ASCE, Vol. 125, p. 1012-1021, 1960.
7. Skempton, A. W. The Pore-Pressure Coefficients A and B. Geotechnique, Vol. 4, No. 4, p. 143-147, London, 1954.
8. Hansen, B. A General Plasticity Theory for Clay. Geotechnique, Vol. 3, No. 4, p. 154-164, London, 1952.
9. Skempton, A. W. A Study of the Immediate Triaxial Test on Cohesive Soils. Proc. Second International Conf. on Soil Mechanics and Foundation Engineering, Rotterdam, Vol. 1, p. 192-196, 1948.
10. Meyerhof, G. G. Discussion on Bearing Capacity of Footings on Layered Clays. Jour. Soil Mechanics and Foundations Div., ASCE, Vol. 93, No. SM5, Part I, p. 361-363, 1967.
11. Katz, D. L., Carnahan, B., Douty, R. T., Hauser, N., McMahon, E. L., Zimmerman, J. R., and Seider, W. D. Computers in Engineering Design Education. Vol. 1, Summary Report, p. 54-63, 1966, Univ. of Michigan.
12. Hooke, R., and Jeeves, T. A. Direct Search Solution of Numerical and Statistical Problems. Jour. Assoc. for Computational Machines, Vol. 8, No. 2, p. 212-229, 1962.
13. Wilde, D. J. Optimum Seeking Methods. Prentice-Hall, Chap. 3, 1964.
14. Taylor, D. W. Fundamentals of Soil Mechanics. John Wiley, p. 573-575, 1948.