Design, Fabrication, and Installation of a Fragmenting-Tube-Type Energy Absorber in Conjunction With a Bridge Rail

WILLIAM E. WOOLAM and LUIS R. GARZA,
Department of Mechanical Sciences, Southwest Research Institute, San Antonio, Texas

Conventional modern bridge rails are rigid installations that redirect the vehicle without providing any energy absorption. This report discusses the design theory that provides a new concept of an energy-absorbing bridge rail, utilizing a fragmenting tube as the primary energy-absorbing element. The paper discusses the separate functions of the bridge rail as both an energy-absorbing system for small vehicles and a redirecting rail for large vehicles. Also presented is a new concept in guardrail design—the cantilevered rail concept. The procedures for fabrication and installation of this prototype energy-absorbing rail are discussed in detail.

•THE TECHNICAL DETAILS involved in the design, fabrication, and installation of an aerospace-developed energy absorber in conjunction with a bridge rail system are discussed in this paper. The primary objective of this research and development program was to demonstrate the feasibility of using a fragmenting-tube-type energy absorber in order to improve the energy-absorbing capability of conventional rigid bridge rail systems. The energy absorber not only effectively diminished the damage potential of the rigid bridge rail systems but also provided the following fringe benefits:

1. It introduced a cantilevered guardrail attachment that eliminated wheel-snagging.
2. It provided the possibility of a dual-purpose guardrail—a primary soft rail system for automobiles (light vehicles), and a secondary stiff rail system for trucks and buses (heavy vehicles).
3. It provided a mechanical-type load relief valve that prevents dynamic loads of over 10,000 lb per post, thus reducing bridge deck damage as a result of the light vehicle impacts.
4. It provided an extremely promising approach to the problem of transition of the bridge rail systems from an off-deck to an on-deck condition.

The design philosophy that resulted in this unique energy-absorbing bridge rail is outlined and described in the present paper. In addition, photographs are used to illustrate the energy absorber and its installation into the bridge rail system.

The full-scale crash tests and the subsequent evaluation of the energy-absorbing bridge rail system are presented in a separate paper by the evaluator, the Texas Transportation Institute (TTI). At the conclusion of the two papers, recommendations for improvements of the overall bridge rail system are presented. These recommendations contain inputs from both the designers and the evaluators.

Paper sponsored by Committee on Guardrail, Median Barriers and Sign, Signal and Lighting Supports and Committee on Bridge Design and presented at the 49th Annual Meeting.

DESIGN

The following design philosophy was utilized in formulating the energy-absorbing bridge rail:

1. Provide a primary energy-absorbing system with a stroke limited to less than 2 ft and simultaneously provide a tolerable environment for a properly restrained occupant of a light vehicle;
2. Provide a secondary backup guardrail system that would provide sufficient strength to prevent penetration of a heavy vehicle;
3. Prevent damage to the vehicle as a result of wheels snagging on the backup posts; and
4. Provide a transition section from the softer off-deck guardrail system to the stiffer on-deck bridge rail.

Although the secondary backup guardrail system was not recognized initially as a portion of the beneficial design philosophy, the backup system was designed to retain large vehicles and for that reason is mentioned here. This benefit was later pointed out by the Bureau of Public Roads.

It was deemed absolutely necessary that the preceding overall philosophy be considered when designing an energy-absorbing bridge rail. Even though these were foremost in the minds of the designers, the primary objective was to demonstrate that the fragmenting tube would fragment and that the energy absorbers would function mechanically as well as conceptual designs indicated they would.

In addition to the major design philosophy outlined, there were other secondary design features incorporated into the system in order to provide a complete guardrail installation. Because of the limited scope of the present research, the following features were assigned secondary importance: end treatments, backup post for heavy vehicles, rub rails, steel-reinforced concrete decks, and a backup rail installed at a suitable height for larger vehicles having a higher center of gravity. This does not imply that because these features were assigned secondary importance they are sufficiently well developed.

Primary Energy-Absorbing Rail

The three major contributors to the overall energy-absorbing process are the vehicle, the guardrail, and the fragmenting-tube energy absorber. In the case at hand, only the guardrail and the fragmenting tubes are design variables in the energy-absorbing system. After consideration of the various types of conventional guardrail systems, the New York-type 6- by 6- by $^3/_{16}$-in steel tubing was selected for inclusion in the system. The guardrail provided suitable stiffness and simplified the attachment of the energy-absorbing device to the backup posts. Next, it was necessary to select the guardrail height and backup post spacing. The guardrail height was selected to be 27 in. as measured from the concrete deck to the top of the beam. This selection was based on results of previous successful crash tests with this particular rail height.

The backup post spacing was selected simultaneously with the energy absorber. Prototype tests at Southwest Research Institute indicated that by using a nominal 3-in. OD 2024 T-3 aluminum tubing and a 0.120-in. wall thickness, each fragmenting tube could be expected to provide a 10,000-lb constant load. Considering an 8 ft 4-in. post spacing combined with the fragmenting-tube absorbers and the New York box beam, we anticipated the approximate peak g deceleration values for three weight ranges of automobiles. These g values would be predicted only near bottoming out. The average would be considerably lower because first one tube is initiated, then two, and so forth, as indicated in the following:

1. 1,600-lb Class—Only a single tube, at the most, would fragment, providing 10,000 lb or 6.2 peak g laterally.
2. 3,200-lb Class—Three tubes would finally fragment, providing a peak force of 30,000 lb or 9.35 peak g laterally.
3. 4,500-lb Class—Five tubes would fragment finally, providing a peak force of 50,000 lb or 11 peak g laterally.

These dynamic conditions were estimated based on an assumed beam deformation curve derived from full-scale crash tests. It was anticipated at this stage that the design could be verified by the Barrier III computer program developed by the University of California at Berkeley. Unfortunately, the computer program was in its developmental stages and could not be used to predict the average g values to be expected from the energy-absorbing system prior to the final design. During the full-scale crash tests, the computer program was debugged and checked out with the energy absorbers represented by a Coulomb damper that would provide a retarding force in only one direction. Future developments can presently be evaluated on the Barrier III computer program using the first four crash tests as test cases.

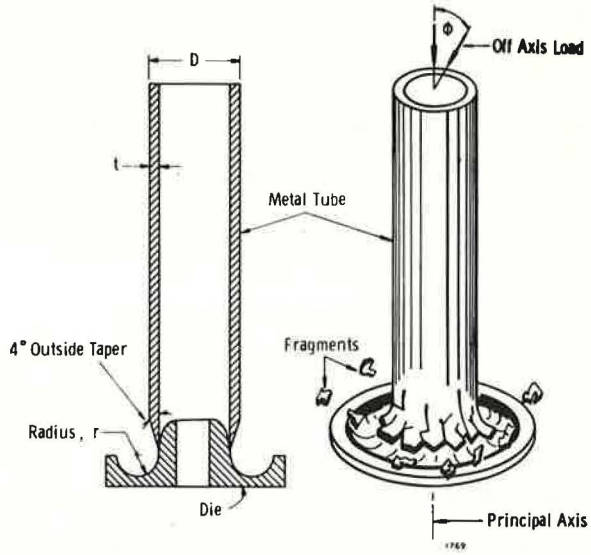

Figure 1. Fragmenting-tube concept.

Because the computer program would require several more months of debugging, the energy-absorbing guardrail designs were frozen at that point and the tubes, post spacing, height, and box beam size were selected. Fortunately, the intuitive design was extremely well optimized, considering that it was predominately designed from engineering judgment.

For those unfamiliar with the fragmenting-tube-type energy absorber concept, it is worthwhile to discuss the mechanics of the energy absorber, the variables that control the fragmenting loads, and designers' problems in using the absorber. The fragmenting tube concept, which was developed at NASA-Langley by J. R. McGehee (filed as Patent 3,143,321, August 4, 1964, and discussed in NASA TN D-3268, February 1966), is shown schematically in Figure 1. The energy absorber consists of a thick-walled aluminum tube and a heat-treated steel flaring die. In the process of forcing the thick-walled aluminum tube over the die, the walls of the tube fail and fragments are shed, thus providing energy absorption. The loads provided by each fragmenting tube can be controlled primarily by a variation of the ratio of the tube-wall thickness to the die radius, referred to as the t/r ratio (Fig. 2). The two most attractive features of the energy absorber are that 100 percent of the tube

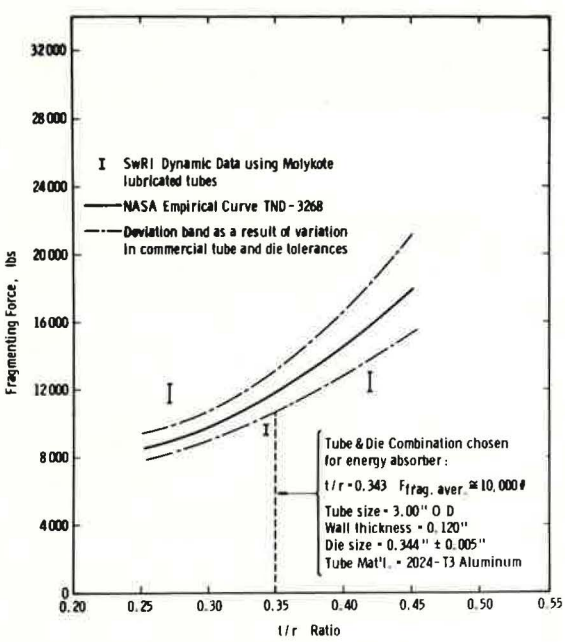

Figure 2. Data on fragmenting tubes.

can be utilized for energy absorption and the fragmenting forces can be controlled by a simple variation of the tube-wall thickness.

The major design problem encountered in including the fragmenting-tube energy absorbers into a guardrail system was control of the fragmentation. Even in the short distance of 2 ft it was considered desirable to control the fragmenting and to cause the box beam and tubes to be driven straight into the fragmenting dies. In order to accomplish this controlled fragmenting, a steel tubular guide system, similar to the one shown in Figure 3, was designed. The tubular guide system also acted as a cantilever-type support for the box beam and led to an interesting design concept that provided a solution to another problem to be discussed later.

The Secondary Backup Guardrail System

The backup guardrail system should serve two important functions in the overall design concept. First, the backup posts should provide a rigid attachment for the fragmenting die, because otherwise it is doubtful that the energy absorber would function properly. Second, the combination of the backup posts and the concrete deck should survive the dynamic loads that would occur as a result of a large vehicle (truck or bus) impact and at the same time redirect the vehicle.

The backup post system was chosen from a conventional Texas T-1 bridge rail design. This design calls for a 6-in. wide-flange (WF) post welded to a 1-in. steel plate on the base and an 8-in., 11.5-lb channel on the top of the wide flange. In addition, a steel bearing plate is used below the concrete deck, a steel support plate is used internally in the bridge deck, and high-strength steel bolts are used to secure the WF posts to the concrete deck.

The backup post design was stress-analyzed for dynamic loads that would be experienced as a result of a 10,000-lb constant load applied at 27 in. above the bridge deck. The post was considered to be adequate. Therefore, the 6-in. WF post was the post design selected for proving the feasibility of the energy absorbers. As a caution it should be emphasized here that the 6-in. WF has not yet been proven crashworthy for the case of large vehicle impacts (buses and trucks). Before the system is acceptable for redirecting large vehicles, the backup posts should be initially stress-analyzed and finally full-scale crash-tested. The initial stress analysis might lead to a redesign of the backup posts and the base plate, and might require the addition of a second rail mounted higher than the 27-in.-high box beam in order to sufficiently redirect a large vehicle. Because the primary objective, at least initially, was to evaluate the fragmenting tube energy absorbers only for small vehicle impacts, we accepted the 6-in. WF posts for the prototype system.

Elimination of Wheel-Snagging

As a result of the need for a guide tube to control the fragmenting process, the wheel-snagging problems were eliminated. The guide tube, in addition to providing guidance, supported the 6- by 6- by $^3/_{16}$-in. box beam. As a result, the box beam was supported by the guide assembly in an unusual cantilever fashion a distance of approximately 20 in. from the 6-in. WF posts.

It was anticipated that there would be instances when the fragmenting tubes would "bottom out" and the box beam would be forced flush against the backup posts. As a result, a $2^1/_2$-in. pipe rub rail was attached to the 6-in. WF posts at an arbitrary height of 12 in. Results of the full-scale crash tests indicated that this was a wise selection. The full-scale crash tests illustrated that a rub rail is a necessary feature of the bridge rail installation.

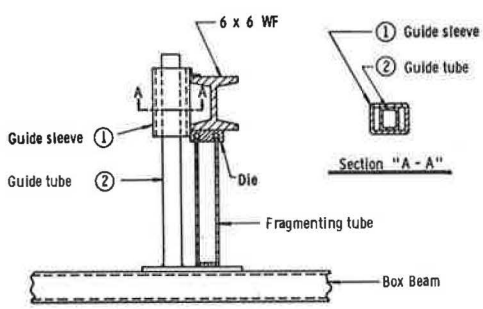

Figure 3. Guide for fragmenting tube.

Transition from Guardrail to Bridge Rail

One of the most difficult tasks of the design program was to provide an adequate transition from guardrail to bridge rail. It appeared that the off-bridge deck system, which consisted of the box beam mounted on a 3I5.7 post with a 6-ft interval spacing, would allow a maximum deflection of 4 ft for the design test conditions, while the on-deck system would allow a maximum deflection of 2 ft for the same test conditions. It appeared then that a reasonable transition could be provided by installing two 4-ft post spacings just prior to entering the energy-absorbing bridge deck installation.

As a result of the final crash test in the TTI evaluation, the transition appeared promising. It is conceivable, however, that the transition can be optimized by either closer spacing of the 3I posts near the transition or a weakening of the first fragmenting tube. The proposed modification should be evaluated first on the Barrier III computer program.

FABRICATION

Only those facets of energy-absorbing bridge rail fabrication that are unconventional with respect to a guardrail system are discussed. Thus, most of the comments in this section apply to the energy absorber per se.

In a sense, the prototype energy absorbers were custom-fabricated because they were the only portion of the system that was not subcontracted but, instead, constructed entirely at Southwest Research Institute. The majority of the energy absorbers, with the exception of the fragmenting tube and die, required simply cutting and welding of construction steel components. The fragmenting tube was cut to length and tapered a prescribed amount on one end, thus allowing a more consistent fragmentation. This tapering also initiates the fragmenting process. Fabricating of the die required a machining process and was, therefore, a more crucial step in fabrication of the energy absorber. It is important to avoid excessive machining error when turning the radius of the die. This problem would be eliminated in the final design because a thin-shell die-casting process would be used to fabricate the finished product.

If a system were chosen for large-scale production of the energy absorber, a manufacturer would thin-shell die-cast the die and would fabricate the guide assembly from structural steel tubing. The 2024 T-3 aluminum tubes could be purchased in large quantities, precut to length, and tapered on one end.

The total estimated cost of the fragmenting-tube energy absorber would be approximately 50 percent above a conventional installation. As an example, the system installed at TTI cost the following: (a) standard bridge rail installation, similar to the Texas T-1 installation but with the New York-type (6- by 6- by $^3/_{16}$ in.) box beam used in place of the "Flex Beam Rail," energy absorber not included, $11.58/ft; and (b) additional cost of the aluminum fragmenting tubes, die, and guide assembly, i.e., the energy absorber, $6.25/ft. These costs do not include labor costs for installation. Prices may differ slightly from bids finally given to highway departments; however, if anything, they are on the conservative side.

A question often asked is, Can you taper the tubes to get a variable force? Yes, the tubes can be tapered; however, it would increase the cost of the tube. The tubes can be tapered or can have step increases in the wall thickness that would give many possibilities for variation of the force-deformation curves. The possibility of tapering or step changes in tube sizes was considered for the small car (1,600-lb) test but was later rejected in favor of the constant-thickness tubing. A more important application of tube tapering might be considered for the transition section. Consideration could be given to tapering the first tube in the series, thus softening the initial portion of the energy-absorbing system.

INSTALLATION

In the same fashion as the section on fabrication, the installation details allude primarily to the energy-absorber portion of the total bridge rail system. The remaining portion of the system is a conventional guardrail installation.

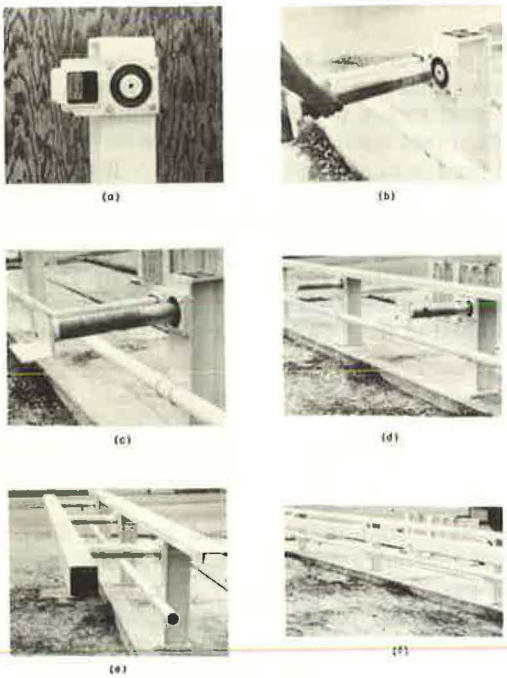

Figure 4. Prototype installation of energy-absorbing guardrail with breakdown of parts: (a) die and guide assembly; (b) assembling energy-absorbing fragmenting tube and guide; (c) assembled energy absorber; (d) spacing between absorbers and wide-flange posts; (e) end view of overall prototype assembly; and (f) front view of overall prototype assembly.

Figure 4 shows the sequential steps of installing the fragmenting-tube energy absorber, the guide assembly, and, finally, the box beam rail section. The steps, quite simply, are as follows:

1. The 6-in. WF posts are leveled, lined up with one another, and securely bolted to the bridge deck.
2. The die and guide assembly is bolted to the 6-in. WF post with the die facing the traffic lane as shown in Figure 4(a).
3. The inside of the 2024 T-3 aluminum tube and the face of the fragmenting die are lubricated with Molykote, a high-pressure lubricant that works its way into the metal pores much like graphite.
4. The fragmenting tube (tapered end facing the die) and the guide are then mounted on the die and guide assembly. The attachment plate is placed on the back side of the guide. This plate is later used to draw the guide and tube assembly into the wide-flange backup posts.
5. The $2\frac{1}{2}$-in. pipe rub rail is attached.
6. The 8-in., 11.5-lb channel is placed on top of the WF post and bolted down.
7. The 6- by 6- by $\frac{3}{16}$-in. box beam is placed on the fragmenting tube and guide assembly, and the box beam is drilled and bolted to the steel angle plate.
8. The backup plate is tightened and the fragmenting tube and tube guide assembly are drawn snug up to the WF posts.

Estimated installation time per section is 4 man-hours. The installation photographs shown were taken at Southwest Research Institute during a mock-up installation.

After the mock-up installation, the system was shipped to TTI and installed on a simulated bridge rail installation. The steel-reinforced concrete simulated bridge deck was a 62- by 8-ft concrete slab with a $2\frac{1}{2}$-ft cantilever overhang that was to simulate the dynamic loads experienced by a full-scale bridge deck. The simulated bridge deck was of conventional design with an added 4-ft long anchorage plate cast in the center of the concrete deck to transmit bending loads to a larger portion of the bridge deck. The bridge deck was built to a uniform 8-in. thickness.

The bridge deck sustained all crash tests with only minor surface cracks that appeared to be compression shear cracks. It is questionable, however, if the existing bridge deck design would be sufficient for either large vehicle crashes or even for a small vehicle crash where the energy absorbers are not used. It must be pointed out that at no time did the dynamic load to any single post exceed 10,000 lb. In a sense, the fragmenting tubes act not only as an energy absorber but also as a load limiter that prevents extensive damage to the concrete deck. It will be interesting to follow closely the results of tests that are presently under way at TTI utilizing the Texas T-1 type bridge rail system. The same simulated bridge deck will be used and the same basic backup post system, but with a Flex Beam type rail and no energy absorber. These tests should illustrate the effectiveness of the fragmenting tube as a load limiter as well as an energy absorber.

CONCLUSIONS AND SUMMARY

Evaluation of the energy-absorbing bridge rail system has been the assigned responsibility of Texas Transportation Institute and therefore the data and evaluation of the full-scale crash tests are presented in a separate paper by TTI. Design engineers at Southwest Research Institute are satisfied that the fragmenting-tube energy absorber can be feasibly combined with a bridge rail system. In addition, a new cantilevered design was introduced that eliminated wheel-snagging, possibilities of a dual-purpose bridge rail were demonstrated, a load limiter for the backup posts was a resulting fringe benefit, and an extremely promising bridge rail to guardrail transition was crash-tested.

RECOMMENDATIONS

Based on a detailed analysis of the high-speed movies, the deceleration data, and the post-crash scenes, the following recommendations are submitted for consideration:

1. Further design studies and full-scale crash tests should be conducted to improve the following specific areas of the integrated bridge rail-guardrail system: (a) Height of the box beam might be raised to 30 or 32 in., as compared to the 27-in. height that was crash-tested, in order to eliminate excessive damage to the steering mechanism on the side of the vehicle that strikes the rail; (b) an improved box beam splice should be considered in order to reduce vehicle snagging; (c) an improved rub rail should be considered in order to prevent wheel-snagging on the backup wide-flange posts and provide additional energy absorption; (d) the transition design between the guardrail and bridge rail should be improved in order to provide a more gradual stiffness transition, thus reducing the pocketing and snagging at the bridge rail; and (e) increasing the height of the backup post should be considered.
2. Analytical parametric studies using the Barrier III program from the University of California at Berkeley should be conducted. These parametric studies could be used to optimize the overall bridge rail and guardrail design.
3. A full-scale field installation of the fragmenting-tube energy-absorbing bridge rail should be considered. The location should be chosen where it could be observed frequently by engineers familiar with the design concept of the fragmenting-tube energy absorber.

ACKNOWLEDGMENTS

This research and development effort was undertaken by Southwest Research Institute under contract with the U. S. Bureau of Public Roads as a part of the Structural Systems in Support of Safety (4S) Program. Credit should be given to John Viner of the Bureau for providing valuable assistance in specific areas of the design of the energy-absorbing bridge rail. In particular, he made contributions to the overall design philosophy, proposed the cantilevered-type guide tube concept, suggested a transition rail treatment, requested the use of a rub rail, and recognized the additional possibility of the bridge rail serving a dual purpose for both large and small vehicles.

The authors acknowledge the contributions of P. A. Cox of Southwest Research Institute to the dynamic analysis of the energy-absorbing bridge rail and the efforts of Guido Ransleben, who assisted in the design feasibility study. The authors also acknowledge the contributions and assistance of Graham H. Powell, Assistant Professor of Civil Engineering at the University of California, Berkeley. Powell provided Southwest Research Institute with the Barrier III computer program and frequently assisted Cox with the dynamic analysis.

The opinions, findings, and conclusions expressed in this publication are those of the authors and not necessarily those of the Bureau of Public Roads.

EDITOR'S NOTE

This paper as originally submitted included an Appendix containing complete installation drawings of the energy-absorbing bridge rail along with detailed drawings of the fragmenting-tube energy absorber. When these drawings are reduced to publication size, much of the detail becomes illegible, and therefore the Appendix material is not included here.