PREFORMED ELASTOMERIC BRIDGE JOINT SEALERS: INTERIM GUIDE FOR DESIGN AND CONSTRUCTION OF JOINTS

George S. Kozlov, New Jersey Department of Transportation

As a result of several years of research that culminated in the construction of two experimental bridges, it now becomes possible to present engineers with procedures for the design and construction of adequately sealed bridge joints. These procedures are offered as an interim solution until research provides further evidence or improvements or both. The paper suggests armored joint construction sealed with preformed elastomeric sealers as the most advantageous solution to the problem of sealing joints in bridges.

•SINCE 1965 the New Jersey Department of Transportation has been conducting a research study dealing with preformed sealers for bridge decks. The results of this study were presented in three previous papers (1, 2, 3). In the first of these papers, it was stated that there was no adequate solution to the problem of effectively sealing joints in bridges. In all three papers, a succession of solutions was offered, which covered the design of bridge joints and preformed sealers, their application in construction, and the thermal characteristics of bridge end movements. In 1969, an experiment was undertaken in which two bridge structures were built utilizing the suggested design and construction procedures; all joints were redesigned and constructed as recommended by the research. Armored-joint construction and sawed-joint construction were used for expansion joints and fixed joints respectively. The purpose of this paper is to present engineers with procedures for the design and construction of adequately sealed joints, based on the findings of New Jersey's previous subject research and the results of this experiment.

SUMMARY OF SUPPORTING RESEARCH

For a period of several years, continual field observations were made of 17 bridge structures scattered throughout the state of New Jersey. Based on the trends revealed by these observations, an analysis was made of current and proposed joint construction and sealing methods and practices, including those of other states and countries. The findings indicated that current sealing systems are malfunctioning primarily because of inadequate construction practices. Nevertheless, it appeared that one particular system, preformed elastomeric sealers, could be made to function properly, provided that the sealer material and bridge behavior were understood; new design and construction methods were offered (1).

Supported by up-to-date knowledge of sealer material, tentative qualification and identification specifications were developed. These specifications, being realistic and closely related to field application, are now furnishing producers and users with practical ways to develop and/or identify a reasonably adequate product (2).

Because field observations led to the conclusions that the bridge deck end movements could, to a great degree, be identified as thermal in character, an attempt was made to summarize the reliable theoretical background of the thermal characteristics of a concrete bridge deck (3).

Sponsored by Committee on Sealants and Filler for Joints and Cracks.

The information gained in the investigation of elastomeric sealers and joint movements eventually led to the development of new procedures for bridge joint design and construction. Finally, two experimental bridges were constructed to test the new procedures.

To ensure the correlation between the sealer specification and its functional application and between the temperature and bridge end movements, we initiated an ongoing research program.

TEST INSTALLATION

The subject experiment was developed and executed by utilizing as a base the techniques outlined in the first two papers (1, 2). The specific procedures used are summarized in Appendixes A, B, and C. The appendixes describe the selection of the sealer, the construction procedures of an armored joint, and the design of the joint armor. The sawed-joint procedure is omitted because it proved ineffectual. As part of the experiment, the sealer material was evaluated in accordance with latest New Jersey Department of Transportation preformed sealer specifications (2).

As is frequently the case, there were deviations in design and especially in execution of construction because of unforeseen circumstances. In New Jersey, the actual design and construction of joints and the installation of sealers are accomplished through consultants and contractors. With guidance from the department's research division, the consultant designed the joint armor and supplied supplemental construction drawings. Unfortunately, the drawings specified an excessive anchor spacing (18 in.).

The anchorage was supplemented by welding every available reinforcement bar to the joint's armor. However, some construction deviations also occurred, such as in the forming and sawing of joints, which could not be corrected.

The two experimental bridges have now been open to traffic for 2 years. In the spring of both years, dye tests were performed on these bridges for the purpose of detecting joint leakage.

DYE TESTS

Various colors of dye were used to locate the origin and determine the cause of leaks in bridge joint sealers. The dyes were poured at carefully selected points and were traced by observation of their destination. Generally, the tests were performed during weather conditions that would be most conducive to joint leakage, i.e., freezing and thawing with precipitation. Observation continued until results were ascertained. The only leak that to date has occurred in a fixed joint is attributed to a fault in construction.

CONCLUSIONS

To date, the sawed and armored joints on both bridges do not leak. The results of this experiment appear to bear out the earlier suggestions made regarding proper design and construction procedures (1, 2).

It is essential to recognize the realities of joint design and construction. In the absence of adequate quality control in construction, no material and no method of application will succeed. Joint-sealing and construction should be carried out by specialists, and adequate construction supervision should be provided. In addition, the experiment leads to the following conclusions, which reflect the current state of the art regarding joint-design and construction practices and procedures.

1. The experimental design approach initiated on the bridges has proved its merit. Briefly, basic design principles are as follows. Deck joints shall be horizontally straight from outer edge to outer edge, and the sidewalk joints shall be directly above them in the same straight fashion; main sealers are placed out to out. Sidewalk sealers are also placed out to out, i.e., bottom of curb to outside, with only one vertical shallow bend (60 deg) at the curb (Appendix B, Figs. 3 and 5 through 7).

2. The sawed joints are functioning because they are fixed joints; i.e., they do not incur the degree of movement of an expansion joint. Also, they have the advantage of being designed in accordance with the specialized procedures shown in Appendix A.

The results of poor sawed-joint construction could have been improved if the sealer in a few of the experimental joints had been replaced. Replacement of sealers is ill-advised unless it is performed with great care; it is expensive, and also inconveniences motorists. For these reasons, no sealers were replaced in this experiment. If the sealers in fixed joints (sawed) are replaced, as they should have been in at least one bridge, care should be taken not to jeopardize the functional efficiency of the replacement sealers. Because the joints were sawed improperly, they would first need to be resawed and then thoroughly cleaned and/or adequately repaired and prepared. Immediately thereafter, a proper-size continuous sealer should be installed in accordance with the originally established procedures. Prior to installation, sealers must be tested and approved by the department's bureau of quality control laboratory. Continual and adequate supervision is most essential. Of course, the best way to replace sealers is to utilize the armored type of joint construction and the recommended procedures.

3. The armored type of joint design appears to be the most advantageous of existing solutions to the joint design problem.

RECOMMENDATIONS

The experimental construction discussed here refers to only two bridges, each having only one simple span; yet far-reaching conclusions and broad recommendations have been made in this paper because the experimental installations represent several years of research effort in this field. The following recommendations are offered as an interim solution until more scientific information becomes available.

1. Adoption of the bridge joint design approach as outlined elsewhere (1, 2) and summarized in Appendix A is advised. In both experimental bridges, design and development of joints was fashioned in accordance with suggestions made in the previous papers (1, 2, 3).

2. Also suggested is the adoption of the design and construction procedures for joint armor as given in Appendixes B and C. Further discussion of armored-joint design and development can be found elsewhere (4, 6). Holland's discussion (6) has been clarified by Deuce. The essence of this clarification is as follows: (a) ... soundly constructed joints designed in accordance with the instructions given in Clause 7e should be satisfactory; (b) ... it was not intended to limit the application of the rules from applying to the turned down angle type of armoring; and (c) ... the vertical loading is taken directly from BS 153 (7) and has not so far been substantiated by actual loading measurements on joints. The horizontal loading was recommended as a result of the survey of expansion joints. In the United States there seems to be no specification available that is directly involved in the design of armored joints. For this reason, as an interim measure I have, adopted the use of existing related AASHO specifications (8) as shown in Appendix C.

3. For bridges with spans larger than those given in Tables 1 and 2 in Appendix A, the experimental installation of a "modular sealing system" advocated by Watson (5) should be attempted. The design approach for the modular system is similar to Watson's method.

4. Although various types of armored joints are given, their design is often questionable from structural as well as functional points of view. There are basically two problems that may lead to overdesign or the structural failure of armored joints. The first problem is that of determining accurate load distribution factors and dynamic load and impact factors. The second problem is in the actual stress analysis of the structurally indeterminate armored joint. More research is needed to solve these problems.

5. The sealer selection should be guided by the realization of the fact that there are two completely different types of preformed sealers. One is a compression sealer identified by its ability to produce considerable pressure when compressed. The other type could be called a compression-extension sealer and is currently identified as being very pliable and exerting little pressure when compressed but capable of accommodating some elongation if properly installed. The preformed compression sealer, which already has proved itself in widespread application, is the one discussed here. The compression-extension sealer should be researched separately because the prerequisites for its use

are the positive means of its adhesion to the joint's sides. With the advent of prefabricated joint armament systems, this type of sealer could be used.

ACKNOWLEDGMENT

The author is grateful to the personnel of the New Jersey Department of Transportation for their assistance in gathering and evaluating the data presented in this paper.

REFERENCES

1. Kozlov, G. S. Preformed Elastomeric Bridge Joint Sealers. Highway Research Record 200, 1967, pp. 36-52.
2. Kozlov, G. S. Preformed Elastomeric Bridge Joint Sealers: Evaluation of the Material. Highway Research Record 287, 1969, pp. 50-75.
3. Kozlov, G. S. Preformed Elastomeric Bridge Joint Sealers: Thermal Characteristics of Bridge End Movements. Highway Research Record 302, 1970, pp. 38-48.
4. Koester, W. Expansion Joints in Bridges and Concrete Roads. C. van Amerongen, Translator, Transatlantic Arts, Inc., New York.
5. Watson, C. S. New Developments in Joint Sealing Practice for Longer Spans. Highway Research Record 287, 1969, pp. 76-80.
6. Holland, A. D. Expansion Joints for Use in Highway Bridge Decks. Engineering Division, Ministry of Transport, England, Tech. Memorandum (Bridges) BE6.
7. British Standard 153: Part 3A: 1954. Specification for Steel Girder Bridges, Part 3A. Loads, British Standards Institution, London, England.
8. Standard Specifications for Highway Bridges. American Association of State Highway Officials, 1969, 1.2.5, 1.2.12 (C), and 1.3.2 (H).
9. Grover, L. Manual of Design for ARC Welded Steel Structures. Air Reduction, New York, New York.
10. Reinforced Concrete Design Handbook, A. C. I., Committee 317, Detroit, Michigan.

APPENDIX A

SELECTION PROCEDURE FOR SEALERS

The selection procedure described here accomplishes basically two purposes. It establishes the size of sealer to be used in a joint, and it determines at what width the joint must be constructed to ensure the effectiveness of the sealer. To utilize these procedures, one must set forth ahead of time the capabilities of the sealer in terms of three parameters: X_{max}, Y_{avg}, and Z_{min}. Each of the parameters is the ratio of the width of the sealers at a certain level of compression to its original preformed width W_n, multiplied by 100. Z_{min} is the value of the ratio at the maximum permitted compression of the sealer. Y_{avg} is the desired value of the ratio at the time of sealer installation. X_{max} is the value of the ratio at the minimum permitted compression of the sealer (enough compression to prevent leakage between sealer and joint face).

For the type of sealers currently available, it would appear that X_{max} can be no more than 80 percent, Z_{min} should be 40 to 50 percent, and therefore Y_{avg} should be approximately 60 percent.

The design essentially consists of establishing from Figure 1 the maximum expansion and contraction movements to be experienced at the joint for expected differences between installation deck temperature and subsequent deck temperatures. By using these movements and by applying the X_{max}, Y_{avg}, and Z_{min} values to an estimated sealer size, the construction width of the joint is then determined through a trial-and-error process.

As an example of the application of the data shown in Figures 1 and 2, a solution for a bridge with a span L = 60 ft is given. For New Jersey, a concrete temperature range of 0 to 100 F is assumed as being realistic. The wide range of sealer installation and

Table 1. Guide to design of sealers.

W_n (in.)	At 100 F $W_{J_{min}}$	At 100 F Z	Δ at Δt = 70 F	At 30 to 90 F W_J (in.)	At 30 to 90 F Y	Δ at Δt = 90 F	At 0 F $W_{J_{max}}$	At 0 F X	Limits of Span (ft)
1½	0.875	0.58	0.00	⅞	0.58	0.00	0.875	0.58	Up to 40
	0.695	0.46	0.18			0.24	1.115	0.74	
1¾	0.945	0.54	0.18	1⅛	0.64	0.24	1.365	0.78	40 to 45
	0.915	0.52	0.21			0.27	1.395	0.80	
2	1.04	0.52	0.21	1¼	0.625	0.27	1.52	0.76	45 to 55
	1.00	0.50	0.25			0.33	1.58	0.79	
2½	1.25	0.50	0.25	1½	0.60	0.33	1.83	0.73	55 to 70
	1.18	0.47	0.32			0.42	1.92	0.77	
3	1.555	0.52	0.32	1⅞	0.625	0.42	2.295	0.765	70 to 90
	1.455	0.485	0.42			0.53	2.405	0.80	
4	2.08	0.52	0.42	2½	0.625	0.53	3.03	0.76	90 to 120
	1.95	0.49	0.55			0.71	3.21	0.80	
5	2.575	0.515	0.55	3⅛	0.625	0.71	3.835	0.77	120 to 150
	2.435	0.49	0.69			0.89	4.015	0.80	
6	3.06	0.51	0.69	3¾	0.625	0.89	4.64	0.77	150 to 180
	2.92	0.49	0.83			1.07	4.82	0.80	

Note: All the temperatures given in the table are those of the concrete. Because these temperatures cannot readily be measured, the daily average temperature of the air with a tolerance of +5 to +10 F would be currently acceptable.

Temperature range: 0 to 100 F
Construction temperature: 30 to 90 F
Installation temperature: 30 to 90 F
Degrees of efficiency: $Z_{min} = \pm 0.50\ W_n$; $Y_{average} = \pm$ 0.60 to 0.65 W_n; and $X_{max} = \pm 0.80\ W_n$.

Table 2. Sealer design guide.

W_n (in.)	At 100 F $W_{J_{min}}$	At 100 F Z	Δ at Δt = 70 F	At 30 to 90 F W_J (in.)	At 30 to 90 F Y	Δ at Δt = 90 F	At 0 F $W_{J_{max}}$	At 0 F X	Limits of Span (ft)
1½	0.875	0.58	0.0	⅞	0.58	0.0	0.875	0.58	Up to 55
	0.621	0.41	0.254			0.327	1.202	0.80	
1¾	0.746	0.43	0.254	1	0.57	0.327	1.327	0.75	55 to 65
	0.700	0.40	0.300			0.386	1.386	0.79	
2	0.825	0.41	0.300	1⅛	0.56	0.386	1.511	0.76	65 to 75
	0.778	0.39	0.347			0.446	1.571	0.79	
2½	1.153	0.46	0.347	1½	0.60	0.446	1.946	0.78	75 to 90
	1.084	0.43	0.416			0.535	2.035	0.81	
3	1.334	0.44	0.416	1¾	0.58	0.535	2.285	0.76	90 to 110
	1.242	0.41	0.508			0.653	2.403	0.80	
4	1.867	0.47	0.508	2⅜	0.59	0.653	3.028	0.75	110 to 150
	1.682	0.42	0.693			0.891	3.266	0.81	
5	2.182	0.44	0.693	2⅞	0.57	0.891	3.766	0.75	150 to 200
	1.951	0.39	0.924			1.188	4.063	0.81	
6	2.576	0.42	0.924	3½	0.58	1.188	4.688	0.78	200 to 220
	2.484	0.41	1.016			1.307	4.807	0.80	

Note: All the temperatures given in the table are those of the concrete. Because these temperatures cannot readily be measured, the daily average temperature of the air with a tolerance of +5 to +10 F would be currently acceptable.

Temperature range: 0 to 100 F
Construction temperature: 30 to 90 F
Installation temperature: 30 to 90 F
Degrees of efficiency: $Z_{min} = 0.40\ W_n \pm$; $Y_{average} = 0.60\ W_n \pm$; and $X_{max} = 0.80\ W_n \pm$.

Figure 1. "Δ" movement for S_L = 50 to 200 ft and t = -20 to 120 F.

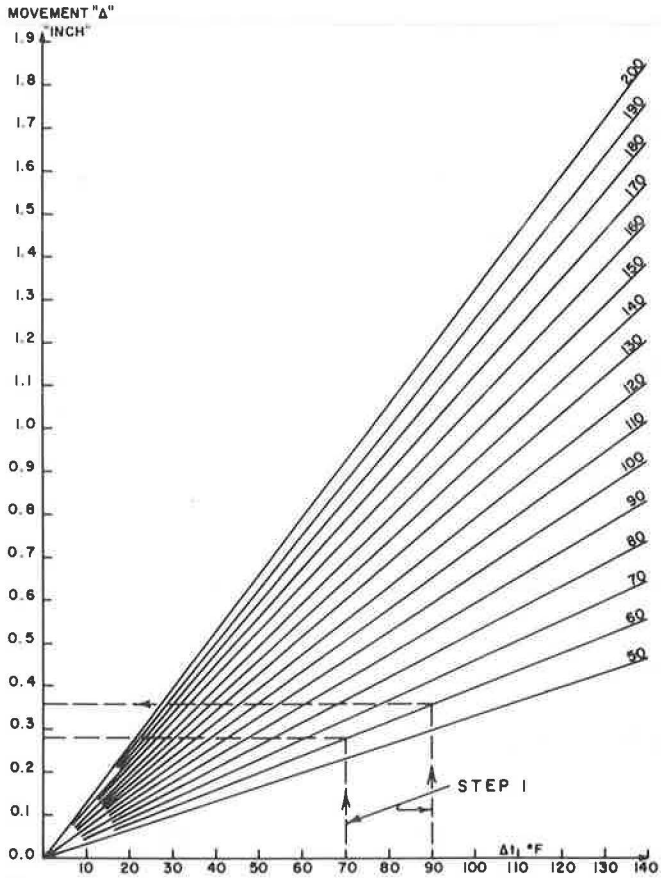

Figure 2. Joint sealer efficiency chart.

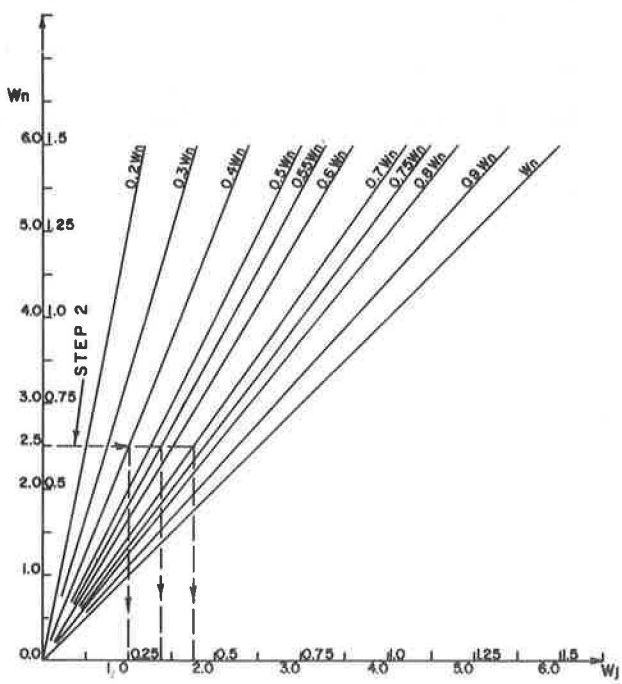

construction temperatures of 30 to 90 F* is selected with required limits on efficiency coefficients taken as

Z_{min} = ± 50 percent at minimum width of joint ($W_{j_{min}}$) and 100 F,
Y_{avg} = ± 60 percent at installation width of joint ($W_{j_{inst}}$) and installation temperature from 30 to 90 F, and
X_{max} = ± 80 percent at maximum width of joint ($W_{j_{max}}$) and 0 F.

Step 1: From Figure 1, using maximum temperature differences between maximum and minimum concrete and installation temperature ranges of Δt = 70 F (100 - 30 F) and 90 F (90 - 0 F), we read off the bridge end movements of Δ = 0.28-in. expansion and 0.36-in. contraction.

Step 2: By estimating the sealer size W_n = 2.5 in. (Tables 1 and 2) and by using the limits Z = 0.5 W_n and X = 0.8 W_n, we find from Figure 2 that $W_{j_{min}}$ = 1.25 in. and $W_{j_{max}}$ = 2.00 in.

$(W_{j_{max}} - W_{j_{min}})/2 = 0.75/2 = 0.375$ in. > 0.36 in. (maximum joint movement).

Thus, the joint construction width should be

$$W_{j_{construction}} = 1\tfrac{1}{2} \text{ in. with } Y_{installation} = 0.60\ W_n$$

The width of joint ($W_{j_{construction}}$) is measured at the upper portion of the joint where the sealer is located.

APPENDIX B

CONSTRUCTION PROCEDURE FOR ARMORED JOINTS

The concept of this method is that the entire system (armor plates with straps and seats welded to them and sealer properly precompressed between the plates and the supporting elements, such as clamps and attached bolts) is preassembled and then placed into the joint before the concrete is poured.

The procedure used should satisfy the design requirements and, at the same time, give the fullest possible consideration to construction practices.

On this basis, the best approach would be to have the elements of the system preassembled to the fullest practicable degree, delivered to the construction site, and assembled completely there. The deck should be poured so as to leave the necessary recess with deck reinforcement properly extended into it. After the concrete is set, the assembly can be placed into the recess, properly located, and the width of the joint between the armor plates adjusted in accordance with the design requirements; then the bar-straps should be welded to the main deck reinforcement. The recess should be filled to the level A (Fig. 3) with optimum-packed-up concrete of good quality. After the concrete in the recess is set, the supporting elements should be removed and the surfacing of the deck at the joint carefully completed.

This procedure, with a little care in construction, should give a satisfactorily sealed joint.

The armored deck joints should be continuous throughout the full width of the deck, and termination should be accomplished as shown in Figures 4 through 7. It is obvious that the armor is utilized for a dual purpose: to armor the joints where necessary and to form the best sealed joint possible.

The seal groove in the sidewalk should also be armored in the same manner, with the curb and outside ends installed as shown in Figures 3 through 7. A stay-in-place anchor seat could be added in the curb end at the bottom outside face of the armor shapes.

All steel of the armor network should be painted. In addition it is recommended that the armor be of ASTM A-242 steel. The stable rust characteristics of this mate-

Figure 3. Armored joint detail, section A-A.

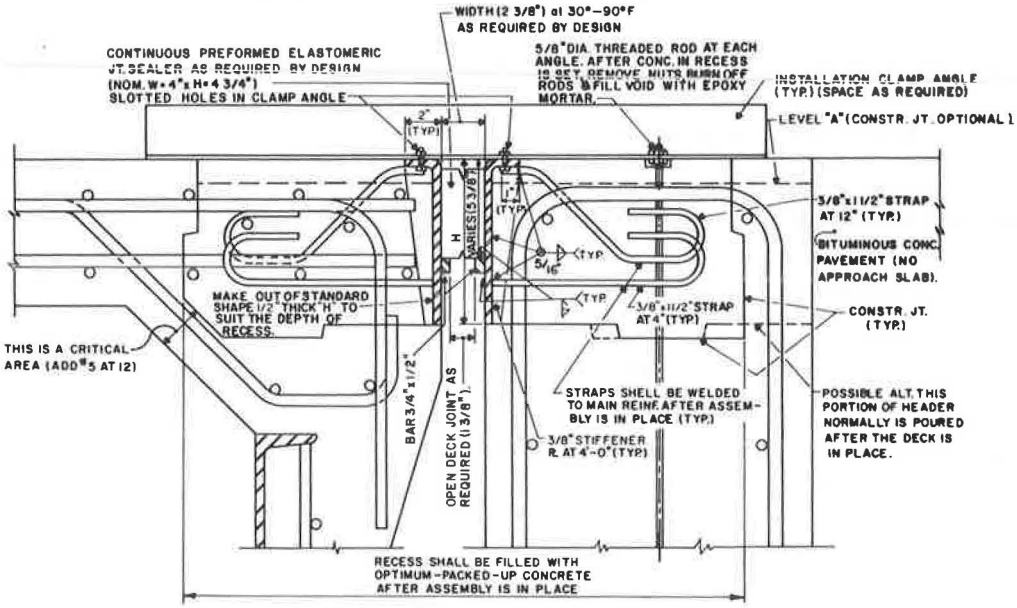

Figure 4. Proposed design of curb-sidewalk-parapet detail for bridges.

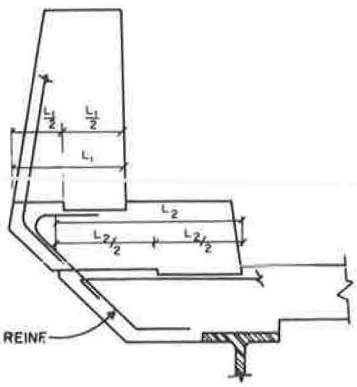

Figure 5. Typical joint detail at sidewalks and curbs.

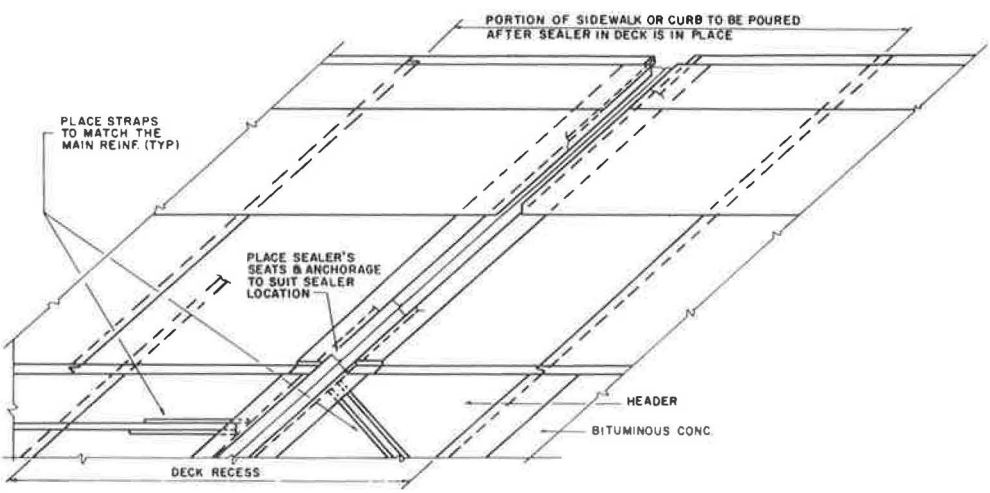

Figure 6. Armored joint detail, safety walk and curb location.

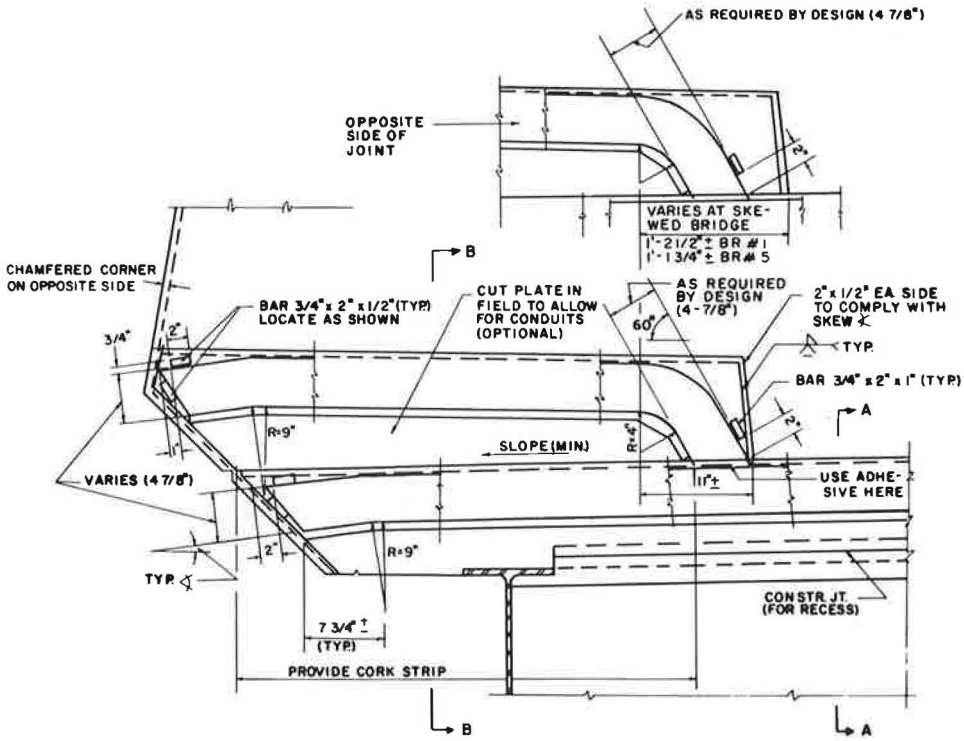

Figure 7. Armored joint detail, section B-B.

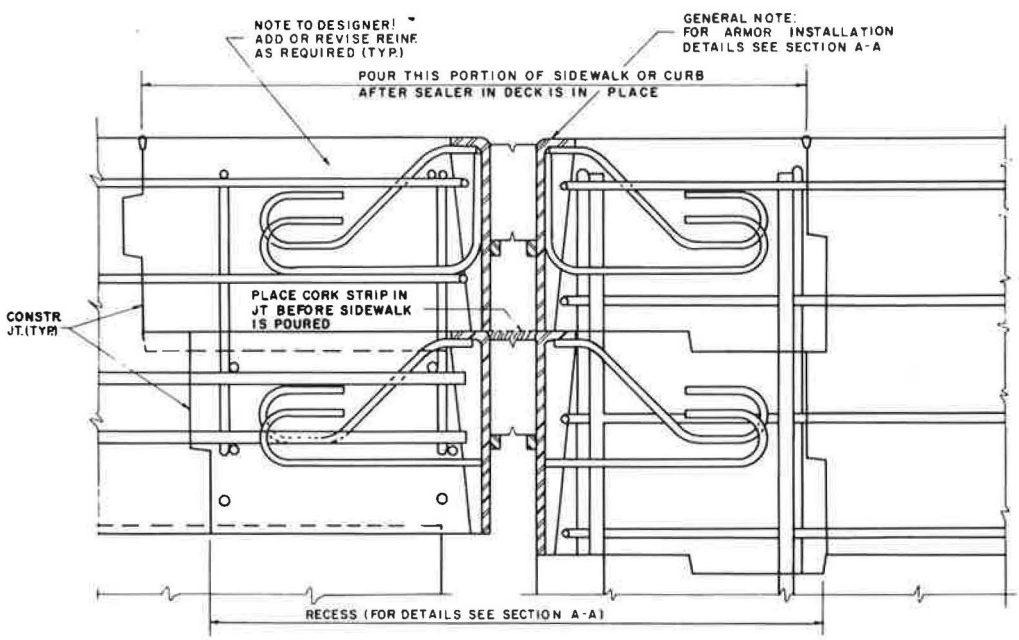

rial will serve advantageously in those areas where paint is likely to deteriorate rapidly with traffic.

Standard lubricant-adhesive shall be applied on both sides of the sealer when located in the armor.

APPENDIX C

DESIGN PROCEDURE FOR ARMORED JOINTS

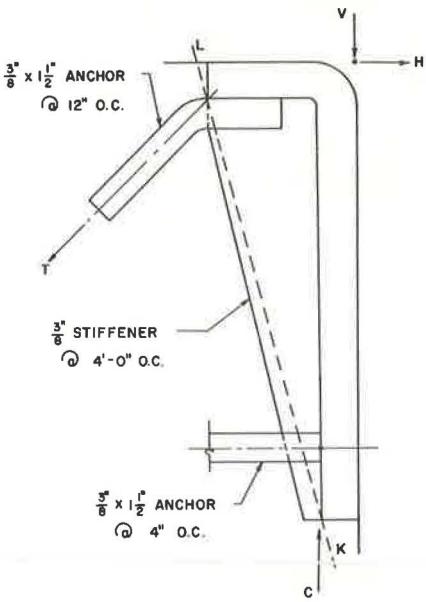

Loads

The accompanying figure is for design purposes only; assume that the concrete above line L-K gives no support to angle.

The following data are AASHO specifications (8) for HS 20-44 loading:

1. Concentrated loads (for shear), 26.0 kips;
2. Wheel load (for horizontal shear), 16.0 kips;
3. Impact fraction, 30 percent;
4. Friction factor for horizontal load, 0.75;
5. Moment per foot of cantilever slab = (P_x/E); and
6. Case B: $E = 0.35\,X + 3.2$.

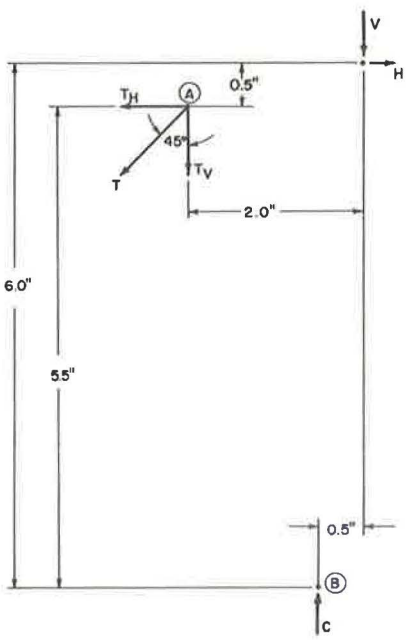

$$V = 26.0 + 0.3 \times 26.0 = 33.8\ K/E$$
$$H = 16.0 \times 0.75 = 12.0\ K/E$$

Load distribution:

$$E_1 = 0.35 \times 0.5 + 3.2 = 3.375\ ft$$
$$E_2 = 3.2\ ft$$
$$E_3 = 0.35 \times 0.17 + 3.2 = 3.26\ ft$$

In absence of definite guidelines, I am exercising my judgment in making reasonably severe assumptions. The following comment (4) is applicable.

> The severity of the forces acting on the edges of the joint increases with the gap width. This necessitates the provision of a steel edge-protection strip which must be so rigid and so closely anchored that it forms an indissoluble composite structure with the bridge deck. The prerequisite for this is that the steel components should be securely joined to the concrete at all contact surfaces.

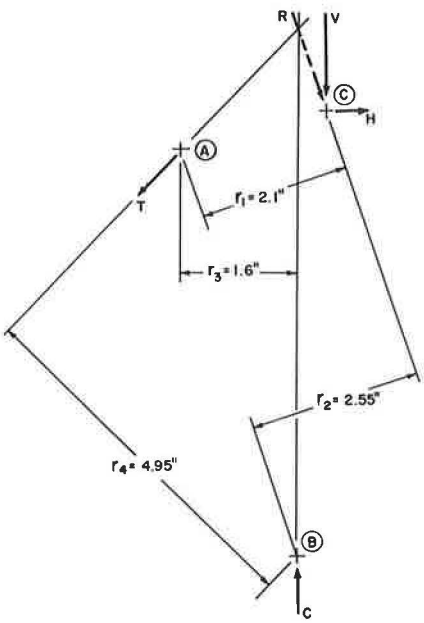

$$R = \sqrt{V^2 + H^2}$$

Moment about support A:

$$(R \times r_1) - (C \times r_3) = 0$$

$$C = (r_1/r_3) \times R = r_1/r_3 \times \sqrt{V^2 + H^2}$$

$$C = 2.1/1.6 \sqrt{(33.8/3.375)^2 + (12.0/3.20)^2}$$

$$C = 14.03 \text{ K/ft}$$

Moment about support B:

$$(R \times r_2) - (T \times r_4) = 0$$

$$T = (r_2/r_4) \times R = r_2/r_4 \sqrt{V^2 + H^2}$$

$$T = 2.55/4.95 \sqrt{(33.8/3.2)^2 + (12.0/3.26)^2}$$

$$T = 5.77 \text{ K/ft}$$

If $T = \sqrt{T_V^2 + T_H^2}$ and $T_V = T_H$ (at 45 deg), then $T_V = T_H = 0.707\ T = 4.08$ K/ft

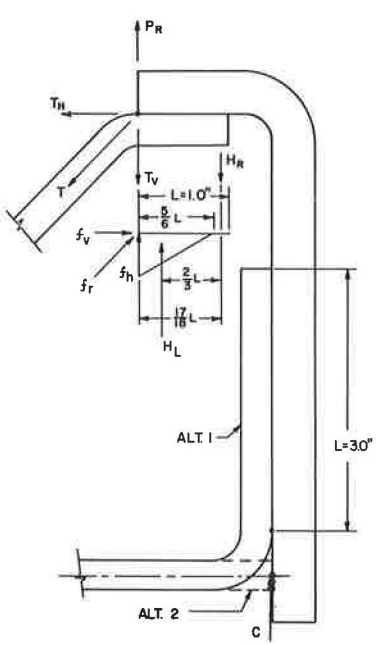

Welding Stresses (9)

$$H_L = H_R = H = 5/12\ f_h\ L$$

$$P_r = 0.707\ f_{ALL}\ DL_1$$

$$(T_V - P_r) \times 17/18\ L = H_L \times 2/3\ L$$

Therefore,

$$f_h = 17/5\ L\ (T_V - 0.707\ f_{ALL}\ DL_1)$$

$$f_v = T_H/(2L + L_1)$$

$$f_r = \sqrt{f_h^2 + f_v^2}$$

Anchors at 12 in. O. C.: $T_V = 4.08_K$; $L_1 = 1.5$ in. (width of strap); $L = 1.0$ in.; $D = 5/16$ in. (size of weld); and $f_r = 0.707\ f_{ALL}\ D$.

$$f_h = (17/5 \times 1.0)\ (4.08 - 0.331\ f) = 13.85 - 1.13\ f$$

$$f_v = (4.08/3.5) = 1.17$$

$$0.221\ f = \sqrt{(13.85 - 1.13\ f)^2 + 1.17^2}$$

$$f = 10.7 \text{ K/in.}^2 < f_{ALL}$$

Alternate 1, anchors at 12 in. O. C.:

$$0.707 \times f \times D \times 2L = C$$
$$f = C/(1.41 \times D \times L) = 14.03/0.442L = 31.8/L$$

For L = 3.0 in. each side,

$$f = 31.8/3.0 = 10.6 \text{ K/in.}^2 < f_{ALL}$$

Bearing: Available L = 9.0 in. Assuming triangular bearing distribution, bearing stress shall be

$$f_{BEAR} = C/A = C/(1.5 \times L/2) = 2C/1.5L = (2 \times 14.03)/(1.5L) = 18.73/L$$
$$f_{BEAR} = 18.73/9.0 = 2.08 \text{ K/in.}^2 > f_{ALL}$$

Alternate 2, n anchors (welding stresses):

$$0.707 f \times D \times 2(a + b) \times n = C$$
$$f = C/(0.707 \times D \times 3.75 \times n) = (14.03)/(0.83 \times n) = 16.95/n$$

For n = 2 or at 6 in. O. C.,

$$f = 16.95/2 = 8.5 \text{ K/in.}^2 < f_{ALL}$$

Shear stresses:

$$f_{SH} = C/(A \times n) = (14.03)/(0.375 \times 1.5 \times n) = 25.0/n$$

For n = 2,

$$f_{SH} = 25.0/2 = 12.5 \text{ K/in.}^2 < f_{ALL}$$

Bearing (alternate 2): Available L = 10.5 in.

$$f_{BEAR} = C/(1.5 \times L/2 \times n) = (2 \times C)/(1.5 \times L \times n) = (2 \times 14.03)/(1.5 \times 10.5 \times n) = 1.78/n$$

For n = 3 or at 4 in. O.C.,

$$f_{BEAR} = 1.78/3 = 0.593 \text{ K/in.}^2 < f_{ALL}$$

Therefore, use bottom anchors at 4 in. O. C.

Tension stresses in top anchors:

$$f_T = T/A = (5.77)/(0.375 \times 1.5) = 10.28 \text{ K/in.}^2 < f_{ALL}$$

Bond stresses: Assuming that hook shall develop 50 percent of the allowable stress in the strap, the bond stress shall be

$$f_{BOND} = T/[2(a + b)\ L \times 2] = (5.77)/(7.5 \times L) = 0.77/L$$

For L = 7 in.,

$$f_{BOND} = 0.77/7.0 = 0.11\ K/in.^2 < f_{ALL}$$

Headers

Failure of headers is not uncommon and has been observed personally by the researcher. It is believed that causes for their failure are as follows:

1. Loading, such as indicated in armor design;
2. Inadequate preparation of the backfill; and
3. Concrete approach slabs directly supported by headers.

For the second problem, only one remedy can be suggested—improvement of quality control in construction.

Design

The following are AASHO design specifications:

1. Concentrated loads, 26.0 kips;
2. Wheel loads for horizontal shear, 16.0 kips;
3. Impact fraction, 30 percent; and
4. Friction factor for tire against concrete, 1.0.

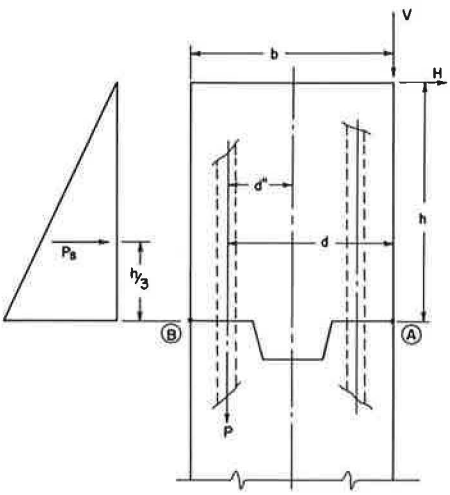

Cantilever slabs: Moment per foot of slab = P/E X, where E = (0.35 X) + (3.2). Thus, V = 33.8 K/E and H = 16.0 × 1.0 = 16.0 K/E.

Load distribution:

$$E = 0.35 \times 1.5 + 3.2 = 3.725\ ft$$

Moment about plane A-B:

$$M = (33.8)/(3.725) \times (b/2) + (16.0)/(3.725) \times h + P_s \times h/3$$

Total vertical load:

$$N = (33.8)/(3.725) + 0.15 \times 1.5^2 \times 1.0$$

Reinforcement design (10):

$$e = (12 \times M)/N) + d\ (in.)$$

$$P = N(e - jd)/jd\ (K/ft\ width)$$

Although the stresses in the vicinity of point A are somewhat small because of moving loads, it is suggested that the same reinforcement be used on both sides of a header.

The problem of approach slabs is complex, especially if a rigid slab is supported on one end elastically and on the other end off a vertically rigid but horizontally flimsy support such as a header.

In such a case, the vertical effect on a header would be an eccentrically located static load and a distinctly possible substantial horizontal static force as well as other dynamic reactions.

A joint that is not permitted to function as designed cannot be sealed. Even a perfect solution of the joint sealing problem will be useless if a header failure disallows proper functioning of the joint.

In the experimental bridges, approach slabs were removed, and inadequate preparation of the backfill had to be overcome.