NATIONAL COOPERATIVE
HIGHWAY RESEARCH PROGRAM REPORT 226

DAMAGE EVALUATION AND REPAIR METHODS FOR PRESTRESSED CONCRETE BRIDGE MEMBERS

TRANSPORTATION RESEARCH BOARD
NATIONAL RESEARCH COUNCIL

NATIONAL COOPERATIVE HIGHWAY RESEARCH PROGRAM REPORT **226**

DAMAGE EVALUATION AND REPAIR METHODS FOR PRESTRESSED CONCRETE BRIDGE MEMBERS

GEORGE O. SHANAFELT AND
WILLIS B. HORN
George O. Shanafelt & Willis B. Horn
Consulting Engineers
Olympia, Washington

RESEARCH SPONSORED BY THE AMERICAN ASSOCIATION OF STATE HIGHWAY AND TRANSPORTATION OFFICIALS IN COOPERATION WITH THE FEDERAL HIGHWAY ADMINISTRATION

AREAS OF INTEREST:
STRUCTURES DESIGN AND PERFORMANCE
MAINTENANCE
(HIGHWAY TRANSPORTATION)
(PUBLIC TRANSIT)
(RAIL TRANSPORTATION)

TRANSPORTATION RESEARCH BOARD
NATIONAL RESEARCH COUNCIL
WASHINGTON, D.C. November 1980

NATIONAL COOPERATIVE HIGHWAY RESEARCH PROGRAM

Systematic, well-designed research provides the most effective approach to the solution of many problems facing highway administrators and engineers. Often, highway problems are of local interest and can best be studied by highway departments individually or in cooperation with their state universities and others. However, the accelerating growth of highway transportation develops increasingly complex problems of wide interest to highway authorities. These problems are best studied through a coordinated program of cooperative research.

In recognition of these needs, the highway administrators of the American Association of State Highway and Transportation Officials initiated in 1962 an objective national highway research program employing modern scientific techniques. This program is supported on a continuing basis by funds from participating member states of the Association and it receives the full cooperation and support of the Federal Highway Administration, United States Department of Transportation.

The Transportation Research Board of the National Research Council was requested by the Association to administer the research program because of the Board's recognized objectivity and understanding of modern research practices. The Board is uniquely suited for this purpose as: it maintains an extensive committee structure from which authorities on any highway transportation subject may be drawn; it possesses avenues of communications and cooperation with federal, state, and local governmental agencies, universities, and industry; its relationship to its parent organization, the National Academy of Sciences, a private, nonprofit institution, is an insurance of objectivity; it maintains a full-time research correlation staff of specialists in highway transportation matters to bring the findings of research directly to those who are in a position to use them.

The program is developed on the basis of research needs identified by chief administrators of the highway and transportation departments and by committees of AASHTO. Each year, specific areas of research needs to be included in the program are proposed to the Academy and the Board by the American Association of State Highway and Transportation Officials. Research projects to fulfill these needs are defined by the Board, and qualified research agencies are selected from those that have submitted proposals. Administration and surveillance of research contracts are responsibilities of the Academy and its Transportation Research Board.

The needs for highway research are many, and the National Cooperative Highway Research Program can make significant contributions to the solution of highway transportation problems of mutual concern to many responsible groups. The program, however, is intended to complement rather than to substitute for or duplicate other highway research programs.

NCHRP Report 226

Project 12-21 FY '79
ISSN 0077-5614
ISBN 0-309-03032-3

L. C. Catalog Card No. 80-53763

Price: $7.20

Notice

The project that is the subject of this report was a part of the National Cooperative Highway Research Program conducted by the Transportation Research Board with the approval of the Governing Board of the National Research Council, acting in behalf of the National Academy of Sciences. Such approval reflects the Governing Board's judgment that the program concerned is of national importance and appropriate with respect to both the purposes and resources of the National Research Council.

The members of the technical committee selected to monitor this project and to review this report were chosen for recognized scholarly competence and with due consideration for the balance of disciplines appropriate to the project. The opinions and conclusions expressed or implied are those of the research agency that performed the research, and, while they have been accepted as appropriate by the technical committee, they are not necessarily those of the Transportation Research Board, the National Research Council, the National Academy of Sciences, or the program sponsors.

Each report is reviewed and processed according to procedures established and monitored by the Report Review Committee of the National Academy of Sciences. Distribution of the report is approved by the President of the Academy upon satisfactory completion of the review process.

The National Research Council was established by the National Academy of Sciences in 1916 to associate the broad community of science and technology with the Academy's purposes of furthering knowledge and of advising the federal government. The Council operates in accordance with general policies determined by the Academy under the authority of its Congressional charter of 1863, which establishes the Academy as a private, non-profit, self-governing membership corporation. The Council has become the principal operating agency of both the Academy of Sciences and the National Academy of Engineering in the conduct of their services to the government, the public, and the scientific and engineering communities. It is administered jointly by both Academies and the Institute of Medicine. The Academy of Engineering and the Institute of Medicine were established in 1964 and 1970, respectively, under the charter of the Academy of Sciences. The Transportation Research Board evolved from the 54-year-old Highway Research Board. The TRB incorporates all former HRB activities but also performs additional functions under a broader scope involving all modes of transportation and the interactions of transportation with society.

Special Notice

The Transportation Research Board, the National Academy of Sciences, the Federal Highway Administration, the American Association of State Highway and Transportation Officials, and the individual states participating in the National Cooperative Highway Research Program do not endorse products or manufacturers. Trade or manufacturers' names appear herein solely because they are considered essential to the object of this report.

Published reports of the

NATIONAL COOPERATIVE HIGHWAY RESEARCH PROGRAM

are available from:

Transportation Research Board
National Academy of Sciences
2101 Constitution Avenue, N.W.
Washington, D.C. 20418

Printed in the United States of America.

FOREWORD

By Staff
Transportation
Research Board

This report contains the findings of a comprehensive assessment of methods of damage evaluation and repair for prestressed concrete bridge members. Some of the recommendations are immediately applicable and will be of interest to engineers, researchers, and others concerned with the design, construction, and maintenance of prestressed concrete bridges.

Prestressed concrete bridge members often are subjected to accidental damage because of vehicle impact, mishandling, or fire. Methods currently used or potentially available for repair of such members need to be identified and evaluated for various levels of damage. At present, the decision to repair or replace a damaged member and the choice of the techniques used are based on the inspector's or engineer's evaluation of the situation, with little published information available for guidance. To place this decision-making process on a rational basis and to facilitate appropriate engineering solutions for the repair of prestressed concrete bridges, it is necessary to assemble and evaluate information on the effect of repair methods on the service life, safety performance, and maintenance of the structure. Decisions on method of repair must also consider cost, user convenience, and esthetics.

This report contains the findings of NCHRP Project 12-21, "Evaluation of Damage and Methods of Repair for Prestressed Concrete Bridge Members." This was the first of a planned two-phase project with the over-all objective being to provide guidance for the assessment of accidental damage to prestressed concrete bridge members and to identify, develop, and evaluate the effectiveness of repair and replacement techniques. The specific objective of Phase I was to synthesize available information on the subject and to identify areas in need of further investigation.

Guidelines are presented in this report for assessment of damage and selection of repair methods. Both repair-in-place and replacement techniques were evaluated. Some methods are recommended for immediate application, and others are recommended for testing prior to widespread application.

Funds are expected to become available for a second phase of research on this problem. Phase II will probably begin near the end of 1981 and have as its objective the production of a user's manual recommending procedures and specifications for repair of prestressed concrete bridges. Phase II research is expected to include evaluation of the effect of damages and the beneficial and adverse aspects of repair techniques on the behavior of the structure. The limits within which these repair techniques should be used will be defined through application of selected techniques to damaged members and subsequent laboratory testing.

CONTENTS

PART II

FIGURES

TABLES

ACKNOWLEDGMENTS

The research reported herein was performed under NCHRP Project 12-21. Willis B. Horn and George O. Shanafelt were principal co-investigators for the research and are the co-authors of this report. George O. Shanafelt was the contractor for this study.

Special thanks are extended to the many departments of transportation who responded to the authors' request for information wtih keen interest and cooperation. In particular, grateful acknowledgment is given to the bridge engineering personnel of the States of California, Florida, Illinois, Iowa, Louisiana, Texas, and Washington. Sincerest thanks are given to the firms involved in the prestressing industry that provided information for this project. The assistance of Barbara L. Russo, chief librarian for the Washington State Department of Transportation, is also greatly appreciated.

DAMAGE EVALUATION AND REPAIR METHODS FOR PRESTRESSED CONCRETE BRIDGE MEMBERS

SUMMARY

The research described in this report is intended to provide guidance for the assessment and repair of accidental damage to prestressed concrete bridge members, primarily longitudinal girders. Repair and replacement techniques presently being used have been identified and evaluated. Plausible repair-in-place techniques are included with appropriate calculations and details. From the data furnished to this study, it is found that the average incidence of damage to prestressed concrete bridge members is approximately 0.86 percent per year. These damages result from vehicle collision, from fire, from other causes, and during manufacture. As anticipated, collisions by overheight vehicles cause the greatest number of accidental damages. Collision damages account for over 80 percent of damages to bridges under traffic.

There is little published information available for guidance. This lack of information and guidelines has resulted in repair techniques that are not always appropriate for particular damage incidents. The decision to repair or replace a damaged member is most often based on an evaluation made under the emergency pressure to restore the facility to service. The findings indicate that some repair-in-place methods do not adequately restore members to their original condition. Some girders have been replaced where the findings indicate that repair-in-place techniques would have been more appropriate.

To place the decision-making process on a more rational basis, this study assembles and assesses information of repair methods. Guidance is provided for the inspection and assessment of accidental damage. Primary emphasis is placed on repair of damage from collision. In addition, guidance is provided for assessment and repair of damage from fire, manufacturing defects, and other causes. The incidence and percentage of accidental damages are included. The present practices and equipment used for assessing damage and for making repairs have been evaluated. Suggested guidelines for damage assessment and for selection of repair methods have been developed. These guidelines incorporate examples of existing practices. Repair of severe damage has been accomplished through the use of repair-in-place techniques. Eleven specific splice repairs for severe damage have been developed and evaluated. Some of these repair techniques can be used without further testing. Others require further testing or special development, or both, and some should be modified to enhance durability characteristics. Evaluation of repair methods has been made on the basis of load requirements; speed of repairs and inconvenience to users; durability; relative costs; esthetics; and materials, methods, and engineering solutions.

The guidelines for damage assessment and for selection of repair methods are structured to result in logical and appropriate techniques. Guidelines specifically address service load capacity, ultimate load capacity, overload capacity, fatigue life, durability, cost, user inconvenience and speed of repairs, esthetics, and range of applicability. Repair-in-place techniques and replacement techniques have been evaluated in accordance with these guidelines by using a value-engineering process.

A principal finding of this study is that the damage inspection phase should be carefully differentiated and separated from the engineering assessment phase. Inspection should report the factual, pertinent damage information. Damage assessment should then be accomplished through logical engineering calculations. This report should contribute to the development and use of good techniques. Damage assessment and methods for repair of accidentally damaged prestressed concrete bridge members will be improved by establishing effective evaluation procedures.

CHAPTER ONE

INTRODUCTION AND RESEARCH APPROACH

PROBLEM STATEMENT

Prestressed concrete bridge members often are subjected to accidental damage because of vehicle impact, because of fire, or during manufacture and handling. Methods currently used or potentially available for repair of such members need to be identified and evaluated for various levels of damage. At present, the decision to repair or replace a damaged member and the techniques used are determined on the basis of the inspector's or engineer's evaluation of the situation, with little published information available for guidance.

RESEARCH OBJECTIVE

The first phase objective of NCHRP Project 12-21 was to provide guidance for the inspection and assessment of accidental damage to prestressed concrete bridge members and to identify, develop, and evaluate the effectiveness of repair and replacement techniques.

On the basis of the findings of this study, a second research phase will be recommended as necessary to further evaluate damage and the effectiveness of selected repair techniques. This second phase is expected to be accomplished through application of certain selected techniques to damaged members and subsequent field or laboratory testing.

SCOPE OF STUDY

Primary emphasis was placed on accidental damage due to impact by overheight vehicles; however, accidental damage due to fire, damage during manufacture, and other damages were also studied.

The types of accidental damage occurring and the severity and frequency of their occurrence were obtained and summarized. Information regarding present practices and equipment used for assessing damage and making repairs was assembled and evaluated. Guidelines for inspection, damage assessment, and selection of repair methods were developed and presented, including examples of good existing repair techniques. Additionally, several new repair techniques were developed and presented.

RESEARCH APPROACH

The research was accomplished by completing four tasks described as follows:

Task 1—Identify and categorize the types of accidental damage found in prestressed concrete bridge members and the severity and frequency of their occurrence. Basic information was obtained through the use of a questionnaire sent to all transportation departments of all 50 States and the transportation departments of the provinces of Canada. In addition, questionnaires were sent to several major railroad companies. Prior to final development of the questionnaire, personal visits were made to the States of Texas, Illinois, Iowa, and Washington. A meeting was held with one major prestress concrete girder manufacturer prior to finalizing the questionnaire. After including all constructive comments, including those made by the project panel, the questionnaires were mailed to the bridge engineers. Telephone contacts were made to states that did not return questionnaires, and telephone contacts were also made as necessary to clarify information received (see App. B for a copy of the Information Request Form; as shown in Table A-1, responses were received from 48 departments.)

Task 2—Identify and analyze present practice and equipment used for assessing damage and making repairs on highway bridges, railroad bridges, and other prestressed concrete structures. A library international literature search for information regarding Task 2 was made. The Transportation Research Information System (TRIS) presently contains at least 76,900 transportation literature abstracts. The literature search was pursued through the Washington State Transportation Department Library. The Washington State Transportation Department Library has access to

at least four systems—TRIS, GEODEX, NTIS, and COMPENDEX. A preliminary search indicated that specific information regarding damage and repair of prestressed concrete girders is quite meager and that the major source of information would be the highway departments.

The informational contacts with highway departments and railroad companies were as described under Task 1. Task 2 information factors that were included are how damage is reported and to whom; how damage is inspected and by whom; list and evaluation of specific equipment used to inspect damage; list of specific information reported based on the inspection; office responsible for preparation of design calculations, plans and, specifications for repair and/or replacement projects; relative costs of repair versus replacement; description of the decision-making process used to determine whether to repair or replace a damaged prestressed concrete girder; rationale for selection of repair methods and materials; procedural methods (i.e., plans and specifications, including materials) or procedural outlines for performance of work; and description of follow-up field inspections of repair procedures to rate performance.

Following analysis of the questionnaires, personal visits were made to the transportation departments of California, Louisiana, and Florida. The agencies were selected on the basis of those that use many prestressed girders, have had a number of accidental damage incidents, and have made repairs to girders in place and replaced girders. A good geographical dispersal was achieved through the visits to these states and the visits to Texas, Illinois, Iowa, and Washington. These final visits provided additional information to the state of the art.

In addition, five prestress concrete girder manufacturers were visited to determine information they might have regarding accidental damage to prestress girders. Two were visited in Washington; and one each in Oregon, Texas, and Louisiana. Visits with representatives of PCI, PCA, and FHWA were made.

In summary, the data to be identified and categorized for Task 2 were obtained from the following sources: an international literature search, personal contacts with a total of seven state transportation departments, personal contacts with five prestressed girder fabricators, questionnaire results from state highway departments and railroad companies (obtained in Task 1), and follow-up telephone contacts with state highway departments and other sources of information that became evident as the study progressed.

Task 3. Based on existing experimental and field performance data that became available through the completion of Task 1 and Task 2, evaluate techniques that have been applied or may have application and develop other methods of assessing and correcting structural damage. Included in the topics considered were: selection of materials, methods, and engineering solutions used in repair; effect of the repair on significant structural behavior and integrity such as fatigue life, ultimate flexural strength, bond strength, service, and overload response; speed of repairs, durability, relative costs, user inconvenience, and esthetics.

One objective of Task 2 and the primary objective of Task 3 was to analyze and evaluate existing, as well as to propose and develop, other techniques for repairing accidental damage to prestressed concrete girders. The techniques were assessed and ranked according to the following criteria: service load, ultimate load capacity, overload capability, fatigue life, durability of repairs, speed of repairs, relative costs, esthetics, and range of applicability.

The criteria were weighted according to value engineering techniques in order to determine which methods were best overall.

As the research work proceeded and information was obtained, it became apparent that there was little documented information regarding repairs made in place. The task of evaluating existing information was less than expected. The task of preparing guidelines and the task of developing repair techniques became greater than expected.

Task 4—Prepare a report summarizing the findings of Phase I and proposing a basic outline of research topics for Phase II. This task resulted in the preparation of this report. Each of the nine criteria items proposed in Task 3 is addressed specifically. The results are presented in a manner readily understood by the practicing engineer or decision-making engineer administrator. A side benefit of this research may be an effective method of strengthening existing prestressed bridges in order to carry heavier live loads. Examples of good existing repair techniques are given. In addition, several new repair techniques are presented.

A basic outline of research topics for Phase II and the reason for their need are included in the report along with an assessment of the potential value of Phase II research.

CHAPTER TWO

FINDINGS

STATE-OF-THE-ART SUMMARY

The majority of prestressed concrete bridge (PCB) girders used are standard AASHTO types. Some transportation departments have developed and use girders they believe have certain advantages over the AASHTO sections.

Overheight loads cause 80.5 percent of damage, and fire causes 2.5 percent of damage. Minor damage accounts for

72 percent, moderate damage accounts for 8 percent, severe damage accounts for 15 percent, and critical damage accounts for 5 percent of the damages reported.

The criteria for assessment of damage range from visual inspection, with varying degree of inspection detail, to structural analysis of the damaged girder compared to the original design. Serious damage is normally inspected by structural engineers under supervision of the bridge engineer. Most damage reports are in letter form and include damage description, severity of damage, repair recommendations, and estimated cost of repair.

The bridge engineer's office is responsible for preparation of plans and specifications for replacement and/or repair work. Minor repair work is often performed by the agency, and major repairs are normally performed by contract. Cost information available indicates that average replacement cost is $48,000 per girder and repair-in-place techniques may cost approximately 30 percent of the cost for replacement. Load capacity and durability rank highest in rationale for selection of repair methods. Service load and ultimate load capacity are the major factors assessed for repair decisions.

Twenty transportation departments use epoxy injection for repairing damaged girders, and nine reported the application of preload. A relatively few indicated the addition of prestress force through posttensioning in the repair of damaged girders. Repair-in-place plans have been developed for wide variations of damage. Reported practices for repair-in-place and replacement techniques are included in Appendix A. Damages have been categorized as minor, moderate, severe, and critical in this report and these definitions are given in Chapter Three.

Techniques restoring prestress force for repair-in-place projects have been developed and successfully applied. Normal replacement of girders is accomplished by removal of the damaged girder from above. A method for removal and replacement from below has been developed. One replacement was accomplished with a precast section consisting of girder, partial roadway slab, and curb section.

Fabrication, storage, and construction defects are reported as occurring by nearly all transportation departments. Information regarding these defects with recommendations is included in Appendix A.

The reader is referred to Appendix A for the complete state-of-the-art report.

EVALUATION OF EXISTING TECHNIQUES USED TO ASSESS DAMAGE AND MAKE REPAIRS

Evaluation of data obtained in this research is made regarding those items that appear significant or that may be of specific interest. To avoid unnecessary duplication, reference is made to Appendix A, "State of the Art." A good response, both in number and data, from departments of transportation has resulted in meaningful correlation. It is believed that the following evaluation of present practices is representative of the state of the art. Every effort has been made to evaluate objectively; however, it is recognized that subjectivity enters all such evaluations.

General Evaluation

As stated earlier, there is little published information related to solutions for the repair of PCB. The diversity of information related to assessment obtained in this research reinforces and sustains this statement. Many variations of techniques used to assess damage and make repairs have been furnished. The wide variations substantiate the fact that standard methods and procedures have not been established. Resolution of damages to PCB is basically and normally a maintenance operation. Consequently, these damages require immediate action to maintain the highway facility to user standards and expectations. A "brush-fire" type maintenance approach is therefore often mandated. The overall evaluation of existing techniques used to assess damage and make repairs is that the problem has not been totally organized.

Types of PCB Girders Used

With regard to types of PCB girders used by departments of transportation, 54 percent are I-sections, 26 percent are box sections, 8 percent are slab sections, and 12 percent are multiple or bulb T-sections.

Incidence of Damage

Two hundred one damages per average year were reported by departments of transportation having a total of 23,344 PCB, resulting in an incidence of 0.86 percent.

Cause	No.	Incidence (%)	% of Damages
Overheight Loads	162	0.69	80.5
Fire	5	0.03	2.5
Other	34	0.14	17.0
	201	0.86	100.0

Severity of Damage

Of reported damage, minor and moderate damages account for 80 percent of the total. Severe and critical damages account for 20 percent of the damages.

Present Practices for Assessing Damage

Criteria for Assessment of Damage

To evaluate the criteria for assessment of damage, it is necessary to correlate information furnished in response to "Factors affecting decisions for repair procedures" and ". . . procedures utilized to determine whether a damaged member is repaired-in-place or replaced" (Section III, items D and F in App. B). Some respondents to the questionnaire in Appendix B obviously equated criteria for assessment only with inspection. Of those respondents that stated visual inspection is the basis for assessment, five indicated that load capacity or structural integrity is evaluated in the decision-making process. The other two re-

spondents had virtually no damage. Visual inspection is obviously part of the inspection process and must be only one part of the required engineering assessment of damage.

To evaluate the more detailed techniques, assessment of damage has been categorized in the three predominantly reported areas. These are damage to prestressing strands, damage to concrete, and structural integrity.

Damage to Prestressing Strands. Assessment of damage based on the loss of one or more prestressing strands or loss of prestress force is given as reason for replacement of the girder. Some responses relate assessment of damage to a percentage loss of strands as reason for replacement. Although this technique for assessment and repair results in repairs equal to original, it tends to inhibit possible other acceptable repair procedures. Each damage should be individually assessed. For severe damages, consideration should be given to applying a repair method similar to one given in this chapter.

Damage to Concrete. Assessment of damage related to observed concrete damage ranged from general statements regarding extent of concrete damage to actual repairs evaluated on performance. Evaluations of criteria for assessment of damage related to rather specific concrete damages are as follows:

1. *If cracking is localized and some strands are cut, repairs are made to restore section with or without post-tensioning.* This assessment would be based on calculations and does provide for repairs on a logical and rational basis.

2. *If cracking and spalling are limited to the lower flange, patching is usually performed.* This assessment should be based on calculations that may allow repair. However, without adequate engineering assessment, this criterion might be taken too literally. It is concurred that this damage may be repaired.

3. *If cracking continues from flange into web, the girder is normally replaced.* Again this criterion might be taken too literally. Findings indicate that repair-in-place may be the preferred decision. This decision should be based on the engineering assessment.

4. *It is hard to conceive a bottom flange with a transverse crack not having a serious concrete spall or strand damage.* This criterion would lead to replacement when repair-in-place might be the preferred decision. Assessment of this damage should be based on a structural analysis from the inspection data.

5. *Terminii of cracks are marked, and if the cracks continue after a period of time the girder is replaced.* This is a good method to determine the effect of loads actually being carried. As a criterion for assessment, it may lead to replacement when repair-in-place methods may be the preferred decision. An engineering assessment should be made.

6. *When large areas of concrete are affected, or when concrete within stirrups is fractured, replace.* The first criterion is too subjective, and the second criterion can be taken too literally. Both are inspection assessments and should be analyzed by an engineering assessment. Findings indicate that for these damages it may be more appropriate to repair-in-place than replace.

Where damage to a girder results in any significant loss of concrete section, an engineering analysis should be made. This analysis should include stress calculations for the damaged girder with comparison to the original design stresses. These calculations will show the loss of strength from the damage. Sample preload calculations are given in this chapter. These sample calculations include stress calculations based on assumed loss of concrete section with and without loss of prestressing force. They also give examples of whether preloading is required to achieve structural integrity through repair-in-place procedures.

Structural Integrity. Generally all departments of transportation indicated that repair and/or replacement decisions are based on structural integrity. Load capacity was by far the most important rationale for selection of repair methods. All departments also indicated that service load capacity is always calculated if repair-in-place is contemplated. Although these criteria were reported as rationale for selection of repair methods, they undoubtedly are also criteria for assessment of damage.

Evaluations of criteria for assessment of damage related to the two predominant areas associated with structural integrity are the following:

1. *A structural analysis is made to determine the stresses in a damaged girder on the basis of the actual loads the girder will carry.* This technique may result in a girder less capable than the original—but one that will safely carry the actual loads. This assessment results in consideration of possible repair-in-place methods which normally should be cost-effective.

2. *A structural analysis is made to determine the load capacity and rating of the girder. If the capacity and rating of the girder is less than provided by the original design, the girder shall be replaced.* This assessment will provide a girder equal to the original design, but precludes possible repair-in-place methods that are normally less costly.

Following the assessment of damage, more consideration should be given to some of the possible methods for structural repair given in this chapter. These methods propose repairs that restore the original structural integrity and can normally be accomplished in less time and at less cost than replacement.

Best Techniques of Assessment of Damage. A concerted effort should be made to impress the importance of separating inspection assessment from engineering assessment. Engineering assessments based on clear and concise inspection data have resulted in the more innovative repair-in-place procedures. During the inspection process, detailed damage information must be obtained for the orderly assessment of damage. This assessment can normally be accomplished best in a traditional office environment. Inspectors should be encouraged to propose alternative procedures for repair related to field conditions.

Assessment of damage, based on the inspection report, should include a structural analysis of the girder. This will will determine stresses the damaged girder would experience under service load, ultimate load, and possibly overloads. Preloading (discussed in this chapter) indicates that

even with extensive concrete section loss, stresses may not be so excessive as to preclude repair-in-place procedures.

The more innovative repair-in-place procedures have also been performed by those transportation departments that place responsibility for assessment of damage and inspection of damage within one office. Departments of transportation that do this include California; Florida; Louisiana; Minnesota; Ontario; Canada; and Washington.

Inspection of Damaged PCB

Thirty-six departments of transportation reported that the bridge engineer's office is always or sometimes responsible for inspection of damage. Twenty-four departments of transportation reported that this responsibility is assigned to the highway maintenance engineer's office. Interviews with states that assign inspection responsibility to the maintenance engineer all advised that in more serious damages they coordinate with and/or actually reassign the work to the bridge engineer. All respondents state that the bridge engineer's office is responsible for the preparation of repair plans. Because the bridge engineer is responsible for repair design, this office should be responsible for inspection. One major component for assessment of damage is the field inspection of damage. The bridge engineer's office should be best qualified for inspection of damage to PCB. Where organization constraints place the responsibility with others, cooperative action with bridge engineer personnel should be a requirement.

Inspection Performed By. Thirty-six departments of transportation reported that inspection is always or sometimes performed by structural engineers. Inspection is reported by 15 departments of transportation to be performed by "others." The "other" category includes personnel specially trained for bridge inspection units or highway and bridge engineers assigned to geographic areas.

To achieve best assessment of damage, consistent and thorough inspections are required. Again, in the case of more serious damage, departments of transportation advise that structural engineers will generally perform an independent inspection, where "others" performed the initial inspection. Structural engineers are best qualified for the inspection of damage to PCB.

Inspection Equipment and Skills. Twenty-nine departments of transportation furnished information related to equipment used for inspection. There is need for proper equipment to achieve the inspection of damage in a safe and thorough manner. The procedures and equipment used by individual departments of transportation are routinely handled by agencies in all maintenance operations. No emphasis is made in this report on traffic control or on type of equipment to reach damaged areas. Obviously, the personnel normally responsible for these functions are best qualified to direct and perform this work.

The following skills and equipment appear significant for good inspection practices. It is recommended that these techniques be considered in the development of standard procedures for the inspection of damaged PCB:

1. Use bridge design plans during the inspection process. Plans should preferably be reduced to half-size for working convenience. Plans of the bridge will provide a good means for recording observed damage. Reference to plans should result in a more thorough inspection in relation to details shown on the plans.

2. Personnel assigned to inspection should have good eyesight and a critical mind. It is recognized that this appears obvious, but the fact should be accepted that some engineers have unique qualities of observation. For the best inspection, personnel should be assessed accordingly.

3. The use of a flashlight and mirror, particularly for inaccessible locations, are excellent tools. A magnifying glass should also be included with inspection equipment.

4. The inspection team should have good camera equipment. Training should be provided to ensure that a sufficient number of properly descriptive pictures are taken of each damage.

5. Some departments of transportation indicated the use of more sophisticated inspection equipment. Pennsylvania uses a pachometer. Connecticut advised they use dye penetrant. New York uses concrete coring equipment. Ontario, Canada, advised they use ultrasonic testing equipment. New Mexico has tried using an oscilloscope for defining internal concrete conditions without too much success. California has tried using a Kuhlman bar with a 10-in. gage length to define stress characteristics of exposed tendons. Results with the Kuhlman bar have not been consistent, and they do not place much value on these tests at this time. California also uses an instrument called a Micro-Mike made by the Dumaurier Co. of Elmira, New York. This is a 20-power microscope with which crack widths to 0.002 in. can be measured. This equipment has proven useful in their inspection.

In any subsequent research, it is recommended that tests be made on the foregoing types of inspection equipment.

Damage Reports. All sample damage reports for assessment were letter-type reports. They generally consisted of an overall descriptive narrative of the damage. This was followed by a detailed description of damage to specific portions of the structure. The information included in damage reports is generally consistent and should result in good overall communication. However, it is believed that more uniform and complete inspection data could be obtained through the development and use of a standard form for the inspection process. This form would best be developed through coordination with those responsible for inspection and those responsible for the engineering assessment.

The apparent present practice of including specific repair or replacement recommendations with the inspection report may result in too hasty decisions. Including possible final repair recommendations in the damage report may cause the inspector to assess the damage prematurely. The damage report should include all information that could be useful in the damage assessment process. It should not include statements that might incorrectly influence the engineering assessment of damage. Even though the inspection is performed by the person responsible for the engineering assessment, conscious effort should be made to separate the inspection process from the assessment process. This appears to have resulted in the more innovative repair procedures.

Personnel responsible for inspection of damage should review or establish, or both, the required traffic restrictions to ensure safety to the users of the facility and to preclude further damage to the structure. These actions necessarily may be subjective at the time of inspection. Traffic restrictions should be revised as appropriately indicated by the engineering assessment of the damage. Restrictions imposed at the time of initial inspection should obviously be conservative.

Rather than including repair decisions in the damage report, inspectors should include possible alternatives for repair. This information should include data that will affect inconvenience to the users, speed of repairs, and esthetics. These factors are related to conditions at the site, and may be important to the overall engineering assessment. Rather than reporting an estimated cost for repairs, the damage report might better include an estimate of damage, because cost of repair would probably be extremely subjective at time of inspection. This also could result in better separation of inspection from assessment.

Some of the best practices noted in the handling of damage reports are as follows:

1. The reporting of damage that is confined to the observed and measured damages.
2. The inspection of damage related to each specific structural component.
3. The early response for damage inspection following the initial report.
4. The coordination of law enforcement reports of accidents with the departments of transportation.
5. The immediate notification of observed damage by highway maintenance personnel to the responsible office. (If possible, the inspection of reported damage should occur within 24 hours of the initial report.)
6. The inclusion of the traffic accident report prepared by the law enforcement officer with the damage report.
7. The establishment of a record system that provides ready access to all damage reports on each structure.
8. The establishment of a record system that provides for cross reference to various categories of PCB damages. (This record should include reference to inspection, assessment, and the final repair decision. This would provide ready access to past experience and eliminate reliance on memory recall.)
9. The development of a photographic file containing pictures of damages and subsequent repairs. (This file also should be cross referenced for ready access.)

Present Practices for Making Repairs

Responsibility for Plans and Specifications

The bridge engineer's office or a consulting engineering firm under direction of the bridge engineer should prepare plans and specifications for replacement or repair plans.

Accomplishment of Work

Minor concrete repair probably can best be accomplished by state forces, while more extensive work can best be performed by contractors with the required specialized equipment. All work should be accomplished on the basis of well-defined plans and specifications.

Rationale for Selection of Repair Methods

Load capacity should rank highest in the selection of repair methods. Calculations show that service load capacity generally controls repair methods. The actual load carried by the girder should be considered. Records must be accurate if a girder is repaired at less than service load to ensure appropriate action if the bridge is widened at a later date.

All repairs should be made with materials that are equal to or better than original materials. By using tested bondind materials, epoxy grout and/or high-quality concrete mixes, established surface preparation procedures, epoxy injection of cracks wider than 3 mils, preloading, and posttensioning, durable repairs can be achieved. Special attention should be directed to the placement of nominal reinforcement to tie new concrete to existing concrete. Preloading and/or posttensioning can be applied to induce stresses after repair that will not exceed original design stresses. Incorporating these techniques to repair-in-place projects should result in durability equal to original. If unique features of a repair require maintenance, this must be recognized and proper commitment made to ensure preventive maintenance.

It is hoped that results of this research may reduce costs associated with damaged PCB girders. Repair-in-place projects can be made durable, and cost for replacement appears to be approximately three times higher than for repair-in-place.

Speed of repairs and inconvenience to users are necessarily interrelated. All transportation departments indicate positive action in these areas. Plans that were reviewed included alternate traffic routes and traffic control during the repair period. Replacement methods and repair techniques should be analyzed on the basis of this rationale.

Replacement of damaged girders should result in esthetics equal to original. Proper choice of repair-in-place techniques should also result in nearly equal conditions. Repair material should have the same physical appearance as original, and where this is not the case surface treatment should be specified. Esthetics should be considered during the choice of repair techniques.

Present Methods of Repair

Twenty transportation departments reported the use of epoxy injection, and nine reported the application of preload in the repair of damaged girders. The application of preload should always be investigated in relation to concrete repairs. Applying preload prior to epoxy injection and patching can result in live-load stresses no greater than original. This will enhance the durability of the repair. Eight departments of transportation reported techniques to strengthen damaged girders by splicing of strands, adding prestress, or adding mild-strength reinforcing. Adding preload and additional prestress force if required can result in repair-in-place techniques equal to replacement. This evaluation is substantiated by calculations included in this chapter.

Replacement Plans

The choice of whether to replace from above, to replace from below, or to replace with a precast section that might include roadway deck and curb must be determined from site conditions. These conditions could indicate specific reasons for selection of the replacement method. Minnesota's method of replacing from below, as shown in Appendix A, offers the following advantages:

1. Less removal of roadway deck with less disturbance to reinforcing steel.
2. On the basis of their completion time of 12 working days, this method appears time-efficient.
3. The method appears to be cost-effective.

Plans submitted for replacement projects indicate generally standard practices in accomplishing this work. The following practices appear significant, and it is recommended that they be given consideration in the replacement of damaged girders:

1. Plans outlining the work should be of the same quality and format as original construction plans. Inclusion of original plans with, and/or as part of, the replacement plans will clarify the work.
2. To speed repairs and lessen inconvenience to users, replacement girders could be purchased by the transportation department and furnished to the contractor doing the work. Advertisement for the girder and for the work could be accomplished in the same time frame. This should allow an acceptable time interval between manufacturer's release of prestress in the girder and placement of the roadway slab. Also, consideration might be given to negotiating ongoing agreements with manufacturers for replacement girders on an emergency basis.
3. The use of longitudinal or transverse steel beams located above the bridge roadway is an effective means to support the damaged girder. Rods or cables would be installed through holes in the deck for support. As shown in this chapter, the longitudinal steel beam could also be used to apply preload.
4. Replacement girders should provide strength equal to original girders in the structure. This should not preclude the use of different strand arrangement or different strand specifications.
5. Sawcuts of ½ in. (13 mm) minimum depth should be made along the slab removal lines. The slab removal line should be located away from a normal wheel line and should preferably be located away from the curb line. From the stress standpoint and for economy, the removal line should be located at approximately the quarter point of the slab span away from the first girder left in place.
6. Vibration from live load when placing new concrete is considered in most of the plans. This is a subject in need of further research. If possible, all vibratory loads should be removed until a minimum strength is attained.
7. Replacement of damaged girders presents more possible injuries and accidents than repair-in-place techniques.

Repair-in-Place Plans

Minor Damage. Minor damage repairs are most normally made with an epoxy grout mortar. This material applied as specified to properly prepared surfaces should restore the damaged area to nearly original conditions (*17*). Removal of unsound concrete adjacent to prestressing strands is most safely done by using hand tools. Power tools could be allowed provided they are limited by size and experience indicates acceptability. Precautions should always be taken to avoid damage to strands. Consideration might be given to the application of preload, depending on the location and extent of minor damage, to increase durability of the repair.

Moderate Damage. Moderate damage repairs are most normally made with epoxy grout, as for minor damage, or with special concrete mixes. In addition to patching, most repairs specify injecting cracks with epoxy. Epoxy injection must be done in accordance with the material requirements and should be under the supervision of trained personnel. Cracks larger than 3 mils should be injected to restore structural capability and to ensure durability. Epoxy injection is a proven system being presently used by most transportation departments. By applying preload prior to injecting and patching the damaged area, it is believed that original durability can be achieved. Present practice of specifying the depth of patch to be 1 in. (25.4 mm) minimum should further ensure durability. Consideration should also be given to the installation of welded wire fabric or other nominal reinforcement in the patch area. The use of patching materials having different physical characteristics, for patches of different depth, is good practice. All areas to be patched must be clean, sound concrete, and a bonding material should be applied prior to placement of new concrete or epoxy mortar.

Severe Damage. Five of the six plans reviewed for repair of severe damage restored partial or full prestress. Two of the plans specified preloading prior to epoxy injection and placement of concrete. Patching material was specified to be either epoxy grout or special concrete mix with an epoxy bonding agent.

Repair of severe damage should always be preceded by a structural analysis of the damage related to service load, ultimate load, and overload. Stress calculations and loss of prestress must be based on logical assumptions that are determined from the damage inspection report. In the cases where damage occurs away from maximum stress points, it is logical that the damaged section could be restored to sustain actual imposed loads rather than what the original section might have been capable of sustaining. Without being able to completely review severe damage calculations, it was not possible during this study to objectively evaluate the repairs that did not include preloading in their repair procedures. Where calculations were not furnished, it was assumed in this study that the repairs were based on appropriate calculations to satisfy minimum stress requirements.

As shown in this chapter, it is possible to restore partial or full prestress. The use of preloading should be considered in making all concrete repairs because this can result in live-load capacity equal to the original design. Best practice for the repair of severe damage includes restoration of full prestress in conjunction with the required pre-

load. Good specific specifications for patching and injecting epoxy to repair minor, moderate, and severe damage are those shown by Michigan, Illinois, and Washington (see App. A). The reinforcement of concrete repair areas as specified by Illinois should be given special consideration. Whether attaching devices should be power driven or epoxy anchored in drilled holes could be based on experience. Drilled holes appear to have merit because there seems to be better control to assure that strands are not damaged. Also by drilling holes, there are no localized internal stresses that may occur with power-driven devices.

Value Engineering Analysis of Replacement Plans, Repair-in-Place Plans, and Repair of Severe Damage Techniques

A value engineering analysis was made for each of the 22 replacement plans and the 15 repair-in-place plans furnished by the transportation departments. Also, this evaluation was made for each of the techniques for repair of severe damage, splices 1 through 8 in this chapter. Splices 10 and 11 were included in repair-in-place plans. Splice 9 was not evaluated because of insufficient information. A value engineering method was used to ensure uniformity in evaluations and to establish objectivity as much as possible. The results are given in Table 1.

The criteria and score values used for evaluation are: service load capacity (5); ultimate load capacity (5); overload capacity (5); fatigue life (5); speed of repairs (2); inconvenience to users (2); cost (3); esthetics (grade separations) (3); range of applicability (4); and location of slab joint (3). The first four structural items were added and divided by 4 to avoid placing undue emphasis in this area. The location of slab joint was used as a criterion to evaluate durability of the repair. (Because of the concentration of water and salts at the gutter line, the closer the slab removal is to the gutter, the less durable may be the repair.) Rating the evaluation criteria is done on the basis of: poor (1); acceptable (2); good (3). The following form was used for the evaluations:

		Evaluation Criteria										
		SLC	ULC	OLC	FL	SR	IU	C	E	RA	LSJ	Total
Rating	Weight	5	5	5	5	2	2	3	3	4	3	
Poor	1											
Acceptable	2	(Averaged)										
Good	3		15			6	6	9	9	12	9	66
Maximum Possible Total												66

By referring to Table 1, a comparison can be made between replacement projects, repair-in-place projects, and proposed repair of severe damage techniques. The average score for replacement projects was 50.9, for repair-in-place projects 60.4, and for proposed repair of severe damage techniques 58.38.

As stated in Appendix A, the repair-in-place plans were categorized as minor, moderate, or severe. Averaging these severity categories results in scores of 66 for minor, 60.2 for moderate, and 56.83 for severe, repair-in-place projects. The average score of 56.83 for severe repair-in-place projects can be compared to the average score of 58.38 for the proposed repair of severe damage techniques.

Replacement of damaged girders will fully restore load capacity; however, other considerations show an advantage for repair-in-place techniques, and by selecting appropriate repair techniques full-load capacity can be achieved.

TABLE 1

VALUE ENGINEERING ANALYSIS

State	MT	AZ	MN	MN	WI	WI	VA	Ont	LA	LA	FL	FL	FL	IA	IA	TX	TX	WA	WA	WA	IA	IA	Avg
SL-UL-OL-FL	15	15	15	15	15	15	15	15	15	15	15	15	15	15	15	15	15	15	15	15	15	15	15
Speed	2	2	6	6	2	2	2	2	2	2	2	2	4	2	2	2	2	2	2	2	2	2	2.45
Inconvenience	4	4	4	6	4	4	4	2	4	4	4	2	4	2	2	2	2	2	2	2	2	2	3.09
Cost	3	3	6	6	3	3	3	3	3	3	3	3	3	3	3	3	3	3	3	3	3	3	3.27
Esthetics	9	9	9	9	9	9	9	9	9	9	9	9	9	9	9	9	9	9	9	9	9	9	9
Applicability	12	12	8	8	12	12	12	12	12	12	12	12	4	12	12	12	12	12	12	12	12	12	11.27
Joint Location	6	3	9	3	3	6	6	6	9	9	6	6	3	9	9	9	9	6	9	6	9	9	6.82
Total	51	48	57	53	48	51	51	49	54	54	51	49	42	52	52	52	52	49	52	49	52	52	50.9

Repair-in-Place Plans

State	MI	WA	WA	AZ	AZ	WA	VA	Ont	FL	LA	CA	CA	TX	CT	SC	Avg
SL-UL-OL-FL	11	10	10	5	15	10	10	10	5	10	15	15	15	10	10	10.73
Speed	6	6	6	6	6	6	6	6	6	6	6	6	6	6	6	6
Inconvenience	6	6	6	6	6	6	6	6	6	6	6	6	6	6	6	6
Cost	9	9	9	9	9	9	9	9	9	9	9	9	9	6	9	8.8
Esthetics	9	9	9	9	9	6	9	9	9	9	9	9	9	6	6	8.4
Applicability	12	12	12	12	12	12	12	12	12	12	12	12	12	4	12	11.47
Joint Location	9	9	9	9	9	9	9	9	9	9	9	9	9	9	9	9
Total	62	61	61	56	66	58	61	61	56	61	66	66	66	47	58	60.4
Severity	M	S	M	S	Mi	S	M	S	M	M	Mi	Mi	Mi	S	S	

Mi = Minor
M = Moderate
S = Severe

Repair of Severe Damage (Splices No. 1-8)

	1	2	3	4	5	6	7	8	Avg
SL-UL-OL-FL	15	15	15	15	15	5	15	15	13.75
Speed	6	4	6	4	4	6	6	6	5.25
Inconvenience	6	4	6	4	4	6	6	6	5.25
Cost	9	6	6	6	6	9	9	6	7.13
Esthetics	6	6	9	6	6	9	9	9	7.5
Applicability	12	12	12	12	12	8	8	8	10.5
Joint Location	9	9	9	9	9	9	9	9	9
Total	63	56	63	56	56	52	62	59	58.38

Damage Caused by Fire

The three plans reviewed for repair of fire damage specified that all unsound concrete be removed. All damaged areas were required to be cleaned and properly repaired prior to restoration. The treatment of fire-damaged areas should be similar to treatment of any collision-damaged area prior to placement of new material. Removal of unsound concrete in PCB girders will be accomplished most safely with hand tools. To ensure durability, consideration should be given to the addition of reinforcement, as shown by Texas (Fig. A-2), or to the repair procedures, as shown by Illinois (Fig. A-1) for repairs performed by state forces. The use of structural steel members to reinforce badly damaged bearing areas is good practice.

None of the plans specified preloading of girders prior to placement of new concrete. Where girder concrete damage is extensive, preloading should be considered to enhance durability of the repair. Also, preloading of extensively damaged deck areas would be beneficial.

Fabrication, Storage, and Construction Defects

The evaluation and recommendations for this section are included in Appendix A.

REPAIR OF SEVERE DAMAGE

PCB girders that have suffered severe damage will require restoring of strength. Refer to "Guidelines for Selection of Repair Method" in Chapter Three.

The choice of splices shown in this chapter should be based primarily on severity of damage, least cost, and strength requirements.

The splices for repair of severe damage have the capacity to restore strength of from one to ten ½-in. round 270 K broken strands. At least one of these splices could be designed to splice even more than 10 strands. There is no need to restrict the number of strands that can be spliced.

The splices have been shown for standard AASHTO I-beam types. This shape of bridge girder is most commonly used. The splices can be readily modified for use with other shapes. In fact, some of the splices are more efficient in strengthening beams shaped more nearly like a wide flange steel shape.

The calculations have been kept as simple as possible. The splice calculations are based on no change in stress due to loss of damaged concrete. This provides a simple method of determining the prestress force required to restore strength. Prestress working loads based on simplified prestress loss calculations have been used. The user should refine these calculations as required for the particular damage incident. For examples showing the effect of loss of concrete and the possible need and advantages for preloading, see section under "Preloading" in this chapter. Calculations for splices 9, 10, and 11 are not included in this report. These splices use high-strength rods for repair and ample guidance for calculations is provided in the calculations for splices 1 through 8.

The effect of strands broken on one side of a girder has not been taken into account. The combination of torsional and transverse flexural stress induced by strand eccentricities requires a very complex analysis. It is more practical to assess these stresses in the following manner. Measure the sweep (lateral curvature) of the bottom flange. If the sweep is within the standard tolerance for prestressed girders (generally ⅛ in. per 10 ft of length) the lateral stresses can be ignored. If the sweep is greater than allowable, consider the following approach: (1) Calculate the torsional and flexural stresses induced and use in making splice calculations. (2) Consider jacking the bottom flange into allowable alignment and holding with an added diaphragm. (3) If neither 1 nor 2 is practical, replace the girder.

Calculations are shown for the approximate ultimate strength of each splice. These strengths are compared to the required ultimate strength. Ultimate strength does not usually govern, but should always be calculated. The splices shown are based on the assumption that the broken strands were stressed to their full allowable capacity under service load conditions. Splices have adequate fatigue life provided the limitations shown under "Fatigue" in Chapter Three are followed. The damage is assumed to have occurred at or near the centerline of span (unless noted otherwise).

Nearly all of the splices shown extend above the bottom flange of the girder. For bridges with full depth intermediate diaphragms, this factor does not necessarily pose a problem. Jacking corbels can be placed adjacent to the diaphragms and the diaphragms pierced and used for additional strength. For splices where the diaphragms are simply an obstruction, enough concrete can usually be removed or cored out from the diaphragm to allow passage of the splice. Depending on damage and diaphragm location, some diaphragms will not interfere. Any portion of the metal sleeve splice not used for strength can be slotted to fit around the diaphragm and preferably additional splice length added.

The minimum recommended concrete strength for cast-in-place splices is $f'c = 5{,}000$ psi (definitions of the symbols used in this report are given in App. C). Concrete in posttensioning jacking areas must be well compacted. It should not be difficult to obtain 5,000 psi concrete for the small amounts needed.

Some of the splices have not been used previously to splice prestressed girders. As noted in this report, some of the splices have been recommended for testing. The proposed testing would be primarily to confirm calculations, examine cracking and ultimate loads, possibly economize splice details, and confirm practicality. The splices shown (except as specifically noted) are recommended for use prior to testing.

The repair procedure for splices 1 through 5 is similar. Recut any broken ends of strands that are frayed. Use this new end of strand in computing strand development length. Tie broken strands in place. After removing loose concrete, epoxy grout the damaged area. Concrete repair areas (including the interface between the new repair and the existing concrete) shall be capable of withstanding the same tensile stresses that the original girder was designed for. Strike off the external faces to the original shape. Re-

pair minor and moderate damage in accordance with guidelines in this report. Several of the splices require a roughened surface at the interface between beams and corbels. These surfaces should be cleaned and roughened to a minimum depth of ¼ in., and loose particles should be removed. Holes in webs or flanges should be drilled and located to avoid existing strands or reinforcing.

Proceed with repairs as shown for each splice.

Splice 1

Description

Splice 1 (Fig. 1) illustrates the use of Grade 40 reinforcing steel to restore the loss of strength of one severed ½-in. 270 K strand. As shown in the calculations, the use of preload is required to restore prestress.

This splice is relatively inefficient because it requires six No. 11 bars to restore the strength of one strand for an AASHTO beam Type III. It is believed to be an economical splice that does not require posttensioning.

Construction Procedure

1. Apply preload as determined by calculations.
2. Repair concrete damage.
3. Construct corbels as shown.

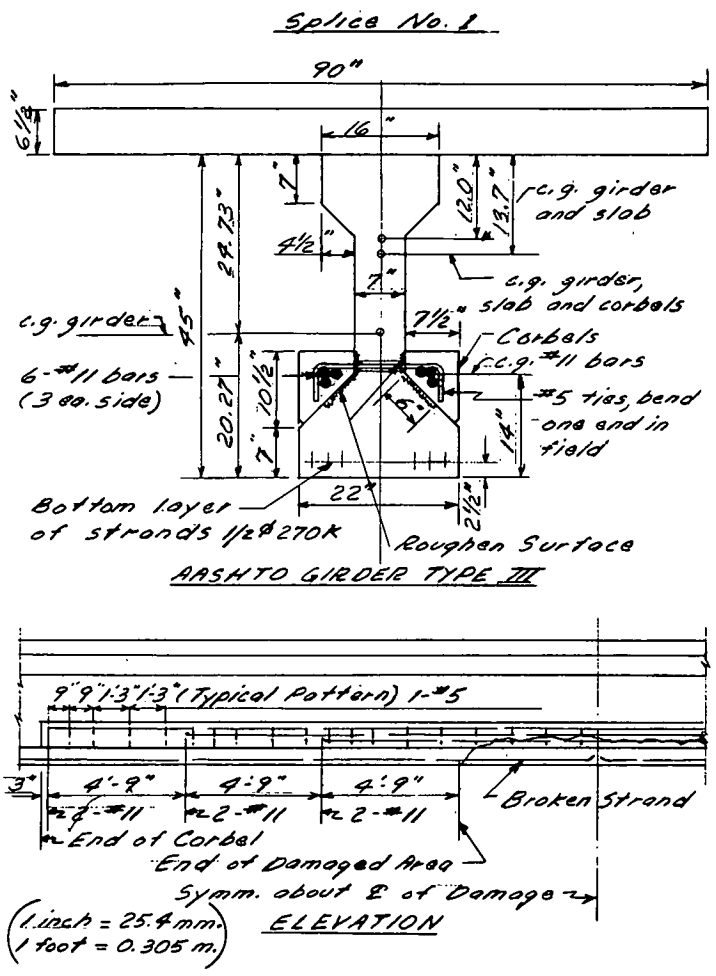

Figure 1. Splice 1.

4. After concrete has gained required strength, remove preload.

Splice 2

Description

Splice 2 (Fig. 2) illustrates the use of two posttensioned 1-in. round ASTM A722-75 smooth Grade 160 rods to restore the loss of prestress of four severed ½-in. 270 K strands in an AASHTO beam Type IV.

This splice uses 4-ft-long jacking corbels located outside the damaged area. The jacking corbels should be located in an area where holes can be drilled through the web without interference with harped or draped strands.

Between corbels the high-strength rods are protected by 1½-in. minimum inside diameter rigid plastic conduits that are pressure grouted after posttensioning. No harmful reaction between PVC conduits and concrete has been found. Plastic tubes have been an accepted means of blanketing strands near the ends of prestressed girders for many years.

The defined yield point of A722-75 bars is at total strain of 0.7 percent and offset of 0.2 percent. These values are compatible with ASTM A416 strand properties. The corbel length of 4 ft 0 in. (1.22 m) was determined by using a minimum tie spacing of 9 in. (229 mm).

Splice No. 2 (Cont.)

f'c girder = 5000 psi. Ec slab assumed to be 0.8 x Ec girder.

Section Properties Girder:
A = 559.5 sq. in., I = 125,400 in.⁴, S bot. = 6190 in.³

Section Properties Girder and Slab:
A = 1027 sq. in., I = 326,600 in.⁴, S bot = 9,895 in.³

Section Properties Girder, Slab, Corbels & 6-#11:
A = 1190 sq. in., I = 379,000 in.⁴, S bot = 12,450 in³

Live Load: Assume Span Length to be 60 ft.
Girder Spacing = 7'-6"
Moment one lane (AASHTO 1977) = 807 k' w/o Imp.
Distribution = 5/5.5 = 1.36
M LL+I = 697 k'. M520
f t bot (composite section - girder and slab):
= 697(12)(1000)/9895 = 845 psi. LL+I

Preload Required:
P = 4M/L = 4(697)/60 = 46.5 k

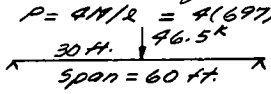

Stress at bot. of girder when preload is released:
(load will act on composite section - girder, slab and corbels including reinforcing steel.)
f bot = 697 (12)(1000)/12,450 = 672 psi.

f bot. (1 strand), after losses; 270K strand =
[0.7(270,000) - 45,000](1)(0.153) = 22 Kips
f bot = P/A + M/S = 22,000/559 + 22,000 (17.8)/6190
= 39 + 63 = 102 psi

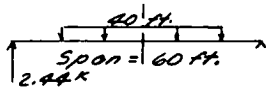

Assume Corbel lgth. = 40 ft.
Wt. of corbels = 122 lb./ft.
M ℄ = 48.8 k'

Corbel Wt. acts on composite girder and slab:
f bot corbel = M/S = 48.8(12)(1000)/9895 = 60 psi.

Splice No. 2 (Cont.)

Prestress Gain = 845 - 672 - 60 = 113 psi.
Prestress loss for one strand = 102 psi.
102 ≤ 113
∴ 6 - #11 will only replace one ½ϕ 270K strand at service load.

Calculate approximate ultimate strength:
a = depth of equivalent compression zone
a = As fy/0.85 f'c b ; f'c = 4000 psi (Rdwy Slab); b = 90 in.

As reinf. steel = 6 x 1.56 = 9.36 sq. in.
As fy = 9.36 x 40 ksi = 374 K
Assume 16 strands originally, with one broken.
As strands = 15 (0.153) = 2.30 sq. in.
As fy = 2.30 (270)(0.85) = 528 K

a = (374 + 528)/0.85(4.0)(90) = 3.0 in. approx.
Assume c.g. of 16 strands to be 5.0 in. above bottom of girder; c.g. of 15 strands =
-1.0 (2.5)/15 - 5.0 = 5.17 in. above bot. of girder.

Mu 6-#11 = 374 (36)/12 = 1122 k'
Mu strands = 528 (44.8)/12 = 1971 k'
Mu Total = 3093 k' (Approximate)

DL gir. = 583 lb/ft., DL slab = 650 lb./ft.
MDL gir. & slab = 555 k' Mcorbels 48.8 k'
MDL total = 604 k' MLL+I = 697 k'
Mu required = 1.3 (DL + 5/3 LL+I)
= 1.3 (604 + 5/3 (697)) = 2300 k'
∴ Ultimate strength of splice is adequate.

Stagger Cut-off points for #11 bundled bars, 40 bar diameters minimum (AASHTO Art. 1.5.5 governs) 40 bar diams. ≅ 40 x 1.4 = 56 in.
Use 4'-9" stagger at ends.

Construction Procedure

1. Apply preload as required (see Fig. 11).
2. Repair concrete damage.
3. After concrete repair has gained required strength, remove preload.
4. Construct jacking corbels and posttension.

Splice 3

Description

Splice 3 (Fig. 3) illustrates the use of a metal sleeve to splice approximately ten severed ½-in. 270 K strands in an AASHTO beam Type IV. Splice 3 is also a good splice to use where loss of concrete occurs, but few if any strands have been damaged. It will restore strength and durability.

No need has been found to recommend a maximum number of strands to be spliced with this repair. The splice could be extended upward to cover the entire web and most of the top flange. Plate thicknesses and the splice development length could be increased. It is probable that this splice could be developed to the point where it would splice an entire portion of a damaged beam.

This splice does not restore prestress, although partial or full prestress may be restored by preloading. Preloading may not be necessary (see Fig. 12). At the splice ends full original prestress will be restored. Any intermediate hairline cracks that may occur are covered by the splice and should not reduce structure integrity or durability.

Splice No. 2 (Cont.)

Calculate number of #5 ties required:

Avt = Vu/ϕ fy u AASHTO Art. 1.5.35
u = 1.2, concrete interface to be roughened.
Area one #11 bar = 1.56 sq. in. fy = 40,000 psi.

Avt = 1.56 (40,000)/0.85 (40,000)(1.2) = 1.53 sq. in.
Area one #5 tie = 0.31 sq. in.
1.53/0.31 = 5 ties required.

Also check shear along interface per AASHTO Art. 1.5.35 E. vu allowable = 350 psi
Vu = 1.56 (40,000) = 62,400 lb.
62,400/9 (57) = 122 psi ≤ 350 psi.

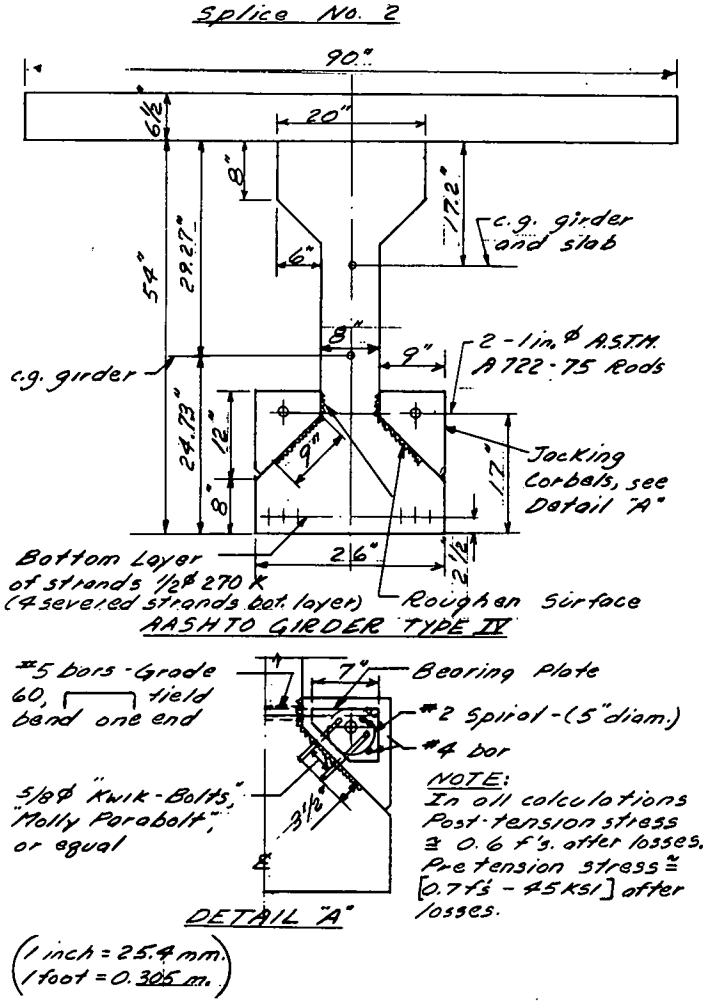

Figure 2. Splice 2.

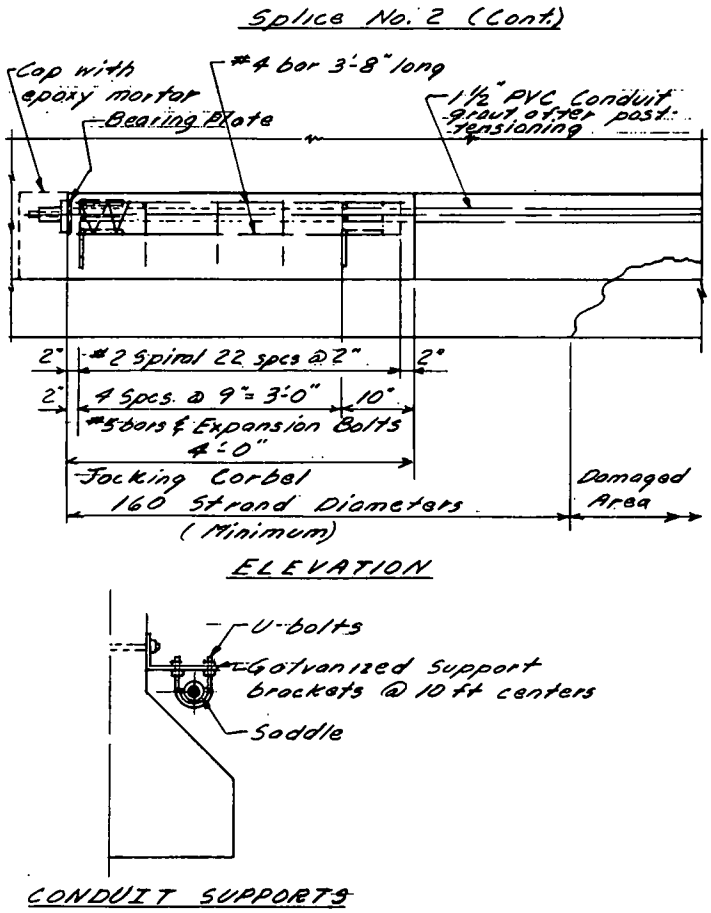

Splice No. 2 (Cont.)

f'c girder = 5000 psi. Ec slab assumed to be 0.8 x Ec girder.

Section Properties Girder:

A = 789 sq. in., I = 260,700 in.^{4}, Sbot. = 10,540 in.^{3}

Section Properties Girder and Slab:

A = 1257 sq. in., I = 573,000 in.^{4}, Sbot. = 15,570 in.^{3}

Live Load: Assume Span Length to be 85 ft.

Girder Spacing = 7'-6"

Moment one lane (AASHTO 1977) = 1255$^{k'}$ w/o Imp.

Distribution = 5/5.5 = 1.36

M_{LL+I} = 1058$^{k'}$ HS 20

ft bot. (composite section - girder and slab)

= 1058 (12X1000)/15,570 = 815 psi LL+I

Assume 4 severed strands in bottom layer, working stress of severed strands = [0.7(270,000) - 45,000] 4 (0.153) = 88 kips

f bot. = P/A + M/S = 88,000/789 + 88,000 (22.23)/10,540

= 111 + 186 = 297 psi.

Prestress Loss

Added prestress = 2 - 1-in.Ø ASTM A722-75 Rods Grade 160 (Smooth)

Use approximate working load = 0.6 f's

= 0.6 (160 ksi) = 96 ksi

Assume conduit supports @ 10 ft. centers, bending stress ≅ 5.5 ksi.

∴ Working load 2 - rods = (96 - 5.5)(0.785)(2)

= 142 kips

f bot = P/A + M/S = 142/1257 + 142 (19.8)/15,570

= 113 + 180 = 293 psi.

Prestress Gain

293 ≅ 297 ∴ 2 - 1 in.Ø Grade 160 rods will replace four severed 1/2 Ø 270 K strands. Strands are assumed to be in bottom layer.

Note that the minimum length of the splice may be determined by the length required to develop the broken strands. The bond length shown agrees closely with *AASHTO Standard Specifications for Highway Bridges—1977*. The strand is assumed to be bonded at the ends. Whether the transfer of stress from the strands to the metal splice would reduce the bond length required is unknown. Reducing the bond length shown would require load testing.

Bonding of the metal sleeve to the beam would be by pressure injection of epoxy resin or epoxy grout. A clearance of 1/16 in. between the metal sleeve and the beam must be maintained by the use of small 1/16-in. thick metal spacers attached by tack welding to the inside surface of the splice plates. The concrete interface must be clean.

The maximum average injection pressure is assumed to be 30 psi. Note that a temporary stiffening grillage is used to minimize the thickness of plates. The grillage and support brackets may also be used to support the plates prior to welding. The grillage and brackets are to be removed after the epoxy has cured. No attempt has been made to reduce the splice metal thickness to less than 5/16 in. (See AASHTO Art. 1.7.7). If bolts must be raised to avoid draped or harped strands, the top vertical plates and bolts may require redesign.

The plates are galvanized A-36 metal. The inside surfaces of the plates (contact surfaces) must be scored by wire brushing prior to assembling. The brushing should be light enough that it scores the surface but removes relatively little of the zinc coating.

Field welds are to be painted with Galvacon or equal. For exterior girders, the splice sleeves, in addition, should preferably receive one or more coats of "concrete gray" for esthetic reasons. Even though this splice is galvanized or galvanized and painted, it may require infrequent maintenance to ensure that its life is equal to that of the original girder. The life of galvanizing depends on climatic conditions. Agencies may choose the option of using "weathering steel" to prolong the life of this splice. In addition, 1/16-in. thickness of metal loss due to corrosion may be deducted in calculating the strength of this splice.

The plates may be, either precut and welded or cut in the field and field welded, depending on the accuracy of field measurements taken. In order to assemble the splice, a field weld will be required at the top outside corner of the bottom flange. If weather conditions are poor, a heat blanket may be wrapped around the sleeve and heat applied for the time required to cure the epoxy.

A metal sleeve splice for splicing prestressed concrete piles has been used by Concrete Technology of Tacoma,

Splice No. 2 (cont.)

Calculate approximate ultimate strength:
a = depth of equivalent compression zone.
a = As fy/0.85 f'c b f'c = 4000 psi, b = 90 in.

As 2 - 1 in. ϕ rods = 1.57 sq. in.
As fy = 1.57 (160)(0.85) = 213 k
Assume 34 strands originally, with 4 severed.
Area strands = 30 (0.153) = 4.59 sq. in.
As fy = 4.59 (270)(0.85) = 1053 k

a = (213 + 1053)/0.85 (4.0)(90) = 4.0 in. approx.
Assume c.g. of 34 strands to be 6.0 in above bottom of girder. c.g. of 30 strands is 6.47 in. above bottom of girder.

Mu rods = 213 (91.5)/12 = 736 k'
Mu strands = 1053 (52)/12 = 4563 k'
Total = 5299 k' Approx.
DL girder = 822 lb./ft., DL slab = 650 lb/ft.
MDL = 1329 k'
Mu required = 1.3 (DL + 5/3 LL + I)
= 1.3 (1329 + 5/3 (1058)) = 4020 k'
∴ Ultimate strength of splice is adequate.

Calculate Corbel reinforcing:
Area bearing plate = 41 sq. in., Area corbel = 67 sq. in.
Pu = 0.785 (160)(0.95) = 119 k (See AASHTO Art. 1.6.17)
Working load per corbel = 142/2 = 71 kips
fc bearing = 71/41 = 1730 psi under plate.
fc allowable = 3000 psi (See AASHTO Art. 1.6.6.)
Bearing on corbel at Pu = 119/67 = 1780 psi (Safe)

Calculate ties required:
Avf = Vu/ϕ fy μ AASHTO Art. 1.5.35
μ = 1.2, concrete interface to be roughened.
Avf = 119,000/0.85 (40,000) (1.2) = 2.9 sq. in.

Splice No. 2 (cont.)

Strength required (at yield) = 2.9 (40,000) = 116 k
5 - #5 ties = 5 x 0.31 x 40 = 62 k
Expansion bolts, 5/8 ϕ, Use 80% of allowable for reduced spacing in one direction.
10 x 7000 lb x 0.80 - - - - - = 56 k
Total eq. side = 118 k ≧ 116 k

Use Grade 60 #5 ties for added strength across interface.

Also check shear along interface per AASHTO Art. 1.5.35 E. vu = allowable = 350 psi.
116,000/12 (48) = 201 psi ≦ 350 psi.

Washington. A tension test for this splice gave the following results.

Two pile segments were spliced with a 3-ft long (0.915 m) 3/16-in. (4.76 mm) thick sleeve. The space between the sleeve and pile segments was pumped full of epoxy grout. The specimen was loaded in axial tension. The specimen failed by concrete cracking just outside the sleeve and strand slippage at a total load of 210 kips. (The development length of the ½-in. strands was only 18 in. (457 mm). The bond stress on the metal sleeve was 213 psi. The stress in the strands at failure was 125,000 psi.

Construction Procedure

1. Apply preload as preferred (see Fig. 12).
2. Repair concrete damage.
3. After concrete repair has gained required strength, remove preload.
4. Proceed with installation of metal sleeve.

Splice 3 Modified

Splice 3 Modified (Fig. 4) is the same as splice 3 except for means of transferring shear from the concrete girder to the metal sleeve. One modification uses shear bars welded to the top of the bottom splice plate to mechanically transfer stress from the girder to the metal splice. Transverse grooves would be cut on the bottom of the girder to accom-

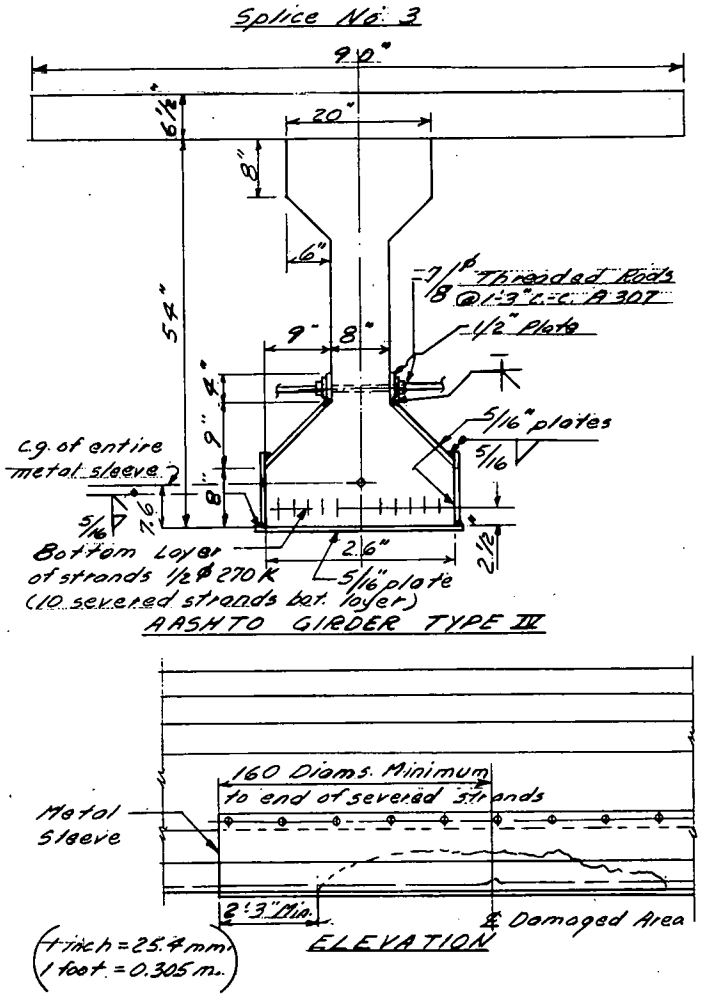

Figure 3. Splice 3.

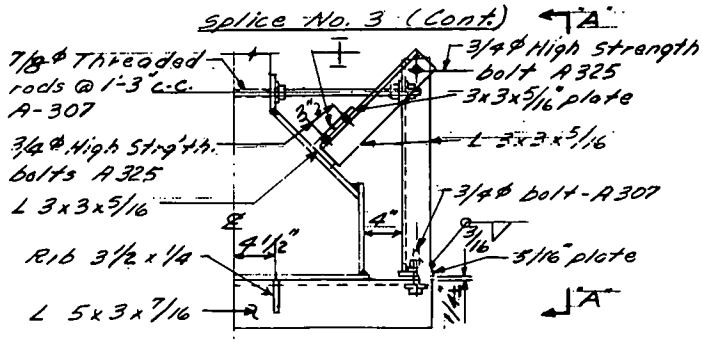

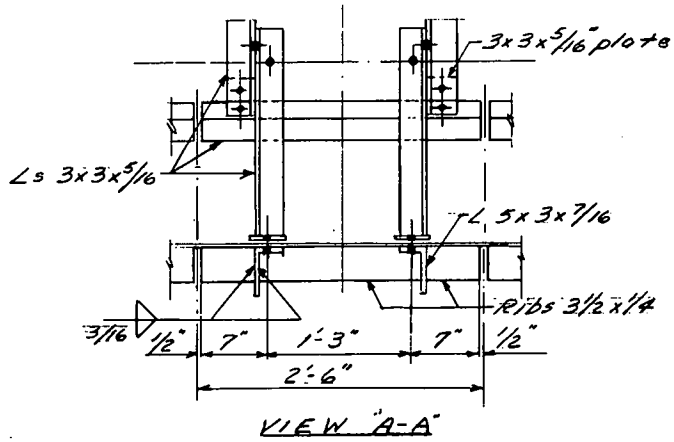

Splice No. 3 (Cont.)

Assume 10 severed strands in bottom layer:
Working strength per strand =
[0.7 (270,000) − 45,000] 0.153 = 22.0k/strand.
Ultimate strength per strand = 270k × 0.153 = 41.3k

The following calculation for the strength of the metal sleeve is approximate, for a more detailed analysis see this chapter, Preload No. 3.

Use only that portion of the sleeve with c.g. at or below c.g. of severed strands.
Area = 26(5/16) + 2(8)(5/16) + 2(1)(5/16) = 13.7 sq in.
Working strength = 13.7 (20) = 274 k
Yield strength = 13.7 (36) = 493 k

Allowable number of broken strands
= 274/22.0 = 12+ or 493/41.3 = 11+

Bond on sleeve at ultimate strength
= 10 (41.3)/(26+16+2)(27) = 348 psi.
(350 psi allowable, AASHTO Art. 1.5.35E)

Bond length for strands; ℓd
= (f*su − 2/3 fse) D = (256 − 2/3(144)) 1/2
= 80 in. AASHTO Art. 1.6.18.
160 Diameters = 160 × 1/2 = 80 in.

Suggested Temporary Support Attachment Procedure:
1) Fasten Top Sloping Plate by bolting to web.
2) Fasten vertical and diagonal supports to threaded rod.
3) Fasten bottom grillage and bottom plate to vertical angle by tightening vertical bolt.
4) Insert vertical side plates and weld.
5) Inject with epoxy and let epoxy cure.
6) Remove grillage and brackets.
7) Cut protruding threaded rods.

modate the shear bars. The entire sleeve would be pressure-pumped with a nonshrink cement grout. The other modification is similar except the grooves would be cut in the vertical and top face of the bottom flange of the beam.

Each of these modifications requires longer splice lengths. The grooves cut in the girder tend to act like a crack former near the splice ends. The keys may inhibit the flow of grout. The use of these modifications is not recommended unless some set of unusual circumstances prohibit the use of epoxy grout.

Splice 4

Description

Splice 4 (Fig. 5) illustrates the use of six posttensioned ½-in. 270 K strands to restore the loss of prestress of three severed ½-in. 270 K strands in an AASHTO beam Type III. The strands are posttensioned individually and are protected from corrosion by a cast-in-place corbel which is continuous for the full length of the splice.

The Washington State Department of Transportation used a similar splice to restore loss of prestress to damaged I-beams in SR 5 Overcrossing No. 12/221 Bridge. Washington State's standard prestressed I-beam shapes differ in shape from AASHTO I-beam types.

Construction Procedure

1. Apply preload if required (see Fig. 13).
2. Repair damaged concrete and preferably cast corbels at this stage.
3. After concrete has gained required strength, remove preload.
4. Posttension.

Splice 5

Description

Splice 5 (Fig. 6) illustrates the use of posttensioning in combination with 4-ft 6-in. (1.37 m) long metal sleeve jacking corbels. The posttensioning consists of two 1-in. round ASTM A722-75 smooth Grade 160 rods.

One advantage of this splice is the lower location of the posttensioned rods, which makes their use more efficient. The jacking corbels can usually be located in an area where bolts can pass through the web without interfering with harped or draped strands.

Two 1-in. round posttensioned bars will restore the loss of prestress of approximately six severed ½-in. 270 K strands in an AASHTO beam Type IV. Shear lugs, 3 in. by ⅜ in., are welded to the inside faces of the jacking

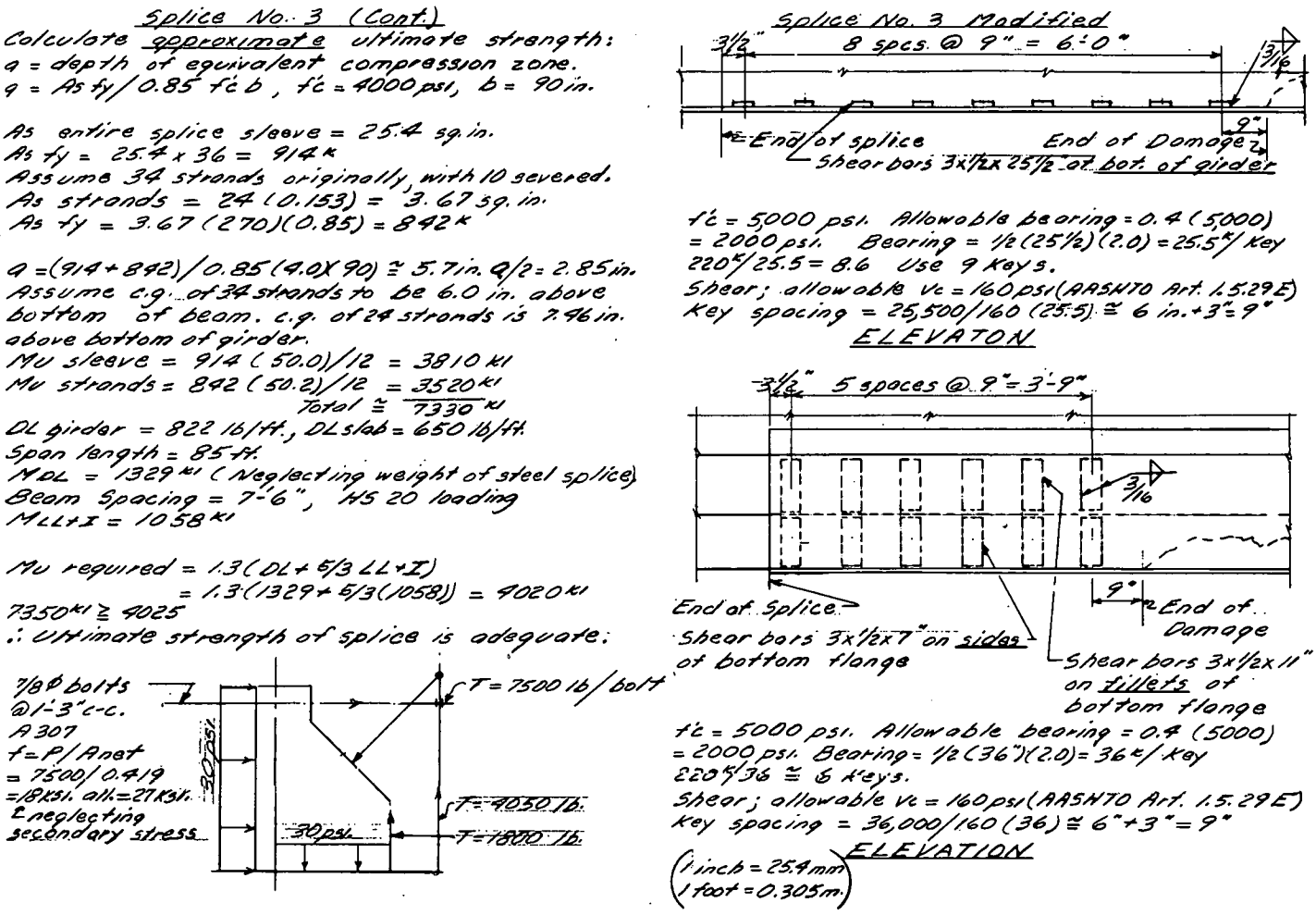

Figure 4. Splice 3 modified.

corbel to transfer shear from concrete to the metal corbel. For other details and comments regarding this splice, see splice 3. A temporary support grillage must be used to avoid overstressing the sleeve plates during the pressure injection of epoxy.

The strength of this splice is adequate to permit the use of a jacking corbel on one side of the girder. The metal sleeve should surround the bottom flange and would be similar to the sleeve required for jacking corbels on both sides. In order to limit transverse stresses, the out-to-out length of jacking corbels should be relatively short, when used on one side only.

The severed strands should be on the same side of the flange as the jacking corbel. One 1-in. round posttensioned rod will restore the loss of approximately three severed ½-in. 270 K strands in an AASHTO beam Type IV.

Construction Procedure

1. Apply preload if required (see section under "Preloading" in this chapter for guidance).
2. Repair damaged concrete.
3. After concrete has gained required strength, remove preload.
4. Proceed with construction of jacking corbels and posttensioning.

Splice 6

Description

Splice 6 (Fig. 7) illustrates the use of strand chucks for splicing strands. A similar technique has reportedly been used to splice high-strength rods.

The following procedure is used to splice strands:

1. Cut frayed ends of severed strands, then slip ordinary splicing strand chucks over ends of broken strands. Allow space between ends for thermal expansion.
2. Heat exposed length of strand to approximately 400 F. Use "temperature sticks" to ensure that no portion of the strand is being excessively heated.
3. Tighten strand grips with wrench and then let strand cool, thereby inducing tension in the strand.

Calculations for this splice show that the tension induced is 73,000 psi assuming no seating loss. This is only a partial restoration of stress.

Stress relieved strand ASTM A-416 Grade 270 is finished by paying the strand off the reel and passing it through a heating device that raises its temperature to about 700 F. Therefore, heating strands to 400 F should not affect the properties of the strand.

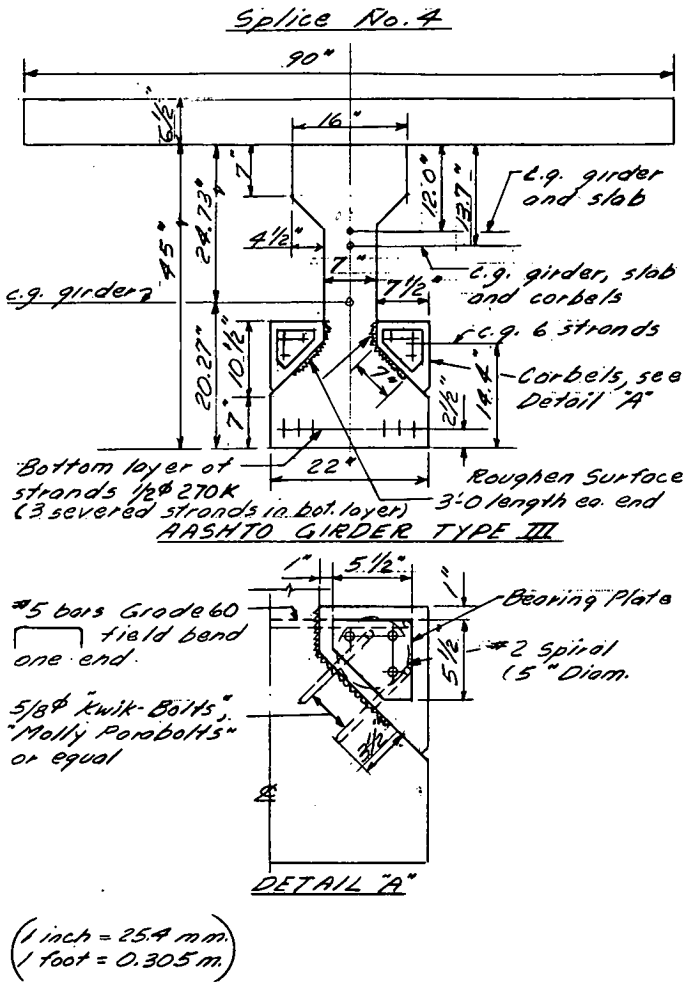

Figure 5. Splice 4.

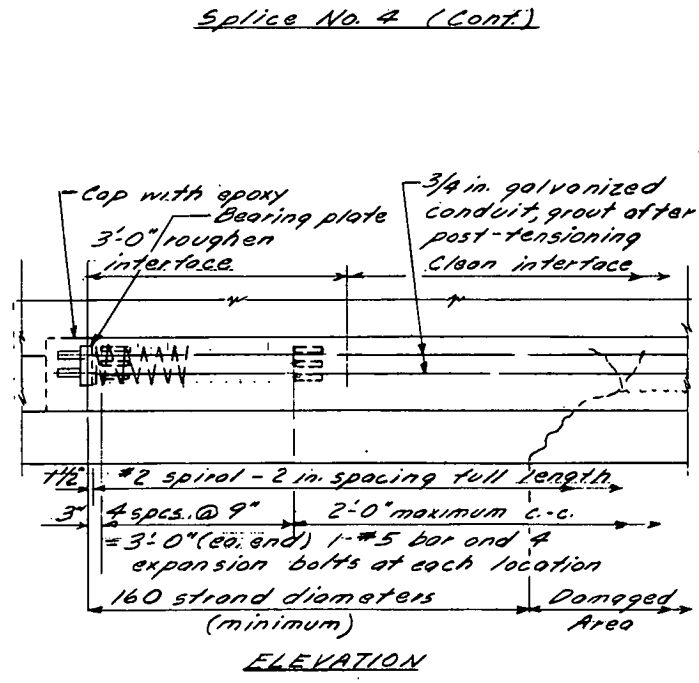

Splice No. 4 (Cont.)

f'c girder = 5000 psi. Ec slab assumed to be 0.8 x Ec girder.
Section Properties Girder:
A = 559.5 sq. in., I = 125,400 in.^{4}, Sbot = 6,190 in.^{3}
Section Properties Girder and Slab:
A = 1027 sq. in., I = 326,600 in.^{4}, Sbot = 9,895 in.^{3}
Section Properties Girder, Slab and Corbels:
A = 1129 sq. in., I = 361,500 in.^{4}, Sbot = 11,550 in.^{3}

Live Load: Assume Span Length to be 60 ft.
Girder Spacing = 7'-6"
Moment one lane (AASHTO 1977 = 807$^{k'}$ w/o Imp.
Distribution = 5/5.5 = 1.36
M_{LL+I} = 697$^{k'}$ HS20
ft bot. (composite section - girder and slab
= 697(12)(1000)/9895 = 845 psi LL+I

Assume 3 severed strands in bottom layer,
Working strength of severed strands ≅
[0.7(270,000) - 45,000] 3 (0.153) = 66 kips
f bot = P/A + M/S = 66000/559 + 66000(17.77)/6190
= 118 psi + 189 psi = 307 psi.
Prestress loss

Weight of corbels = 122 lb/ft.
Assume corbel length = 30 ft.
Corbel moment at ℄ span = 41.2$^{k'}$
f bot. corbel = 41.2(12)(1000)/9895 = 50 psi.

30 ft.
60 ft. span

Added prestress = 6 - 1/2 in.φ 270K strands.
Working load per strand after losses ≅ 0.6 f's
= 0.6x270 = 162 ksi, 162(0.153) = 24.7^k, 24.7(6) = 148^k
f bot = P/A + M/S = 148/1129 + 148(16.9)/11,550
= 131 + 217 = 348 psi
Prestress gain = 348 psi.
Prestress loss = 50 + 307 = 357 psi.
348 ≅ 357 ∴ 6 - 1/2 φ 270K post-tensioned strands will replace 3 - 1/2 φ 270K severed strands in bottom layer.

This splice has been used on County Road No. 37 Underpass on Highway 401 in Ontario, Canada. This repair-in-place project also used four metal sleeves 25 ft 0 in. (7.62 m) long, one at the damaged exterior girder and three more at the adjacent interior girders. Each sleeve surrounded the bottom flange and was connected to each girder with ¾-in. round bolts at 2-ft 0-in. (0.61 m) centers passing through the girder webs. The small 6-in. deep steel diaphragms spaced at 15 ft 0 in. (4.57 m) were fastened to the metal sleeves between girders. These metal sleeves and steel diaphragms contribute primarily to transverse stiffness.

The State of California has reportedly used a similar heating technique to splice prestressing rods. Howlett couplers were used in place of strand chucks. Using an ultimate strength of 150,000 psi, 73,000 psi would represent approximately 50 percent of the ultimate strength. This splice technique does not restore full prestress. Its use would be restricted to damages that do not require full restoration of strength. These damage situations might be at points away from mid-span, or girders that because of their location are not fully stressed. This splice could also be used to supplement the strength of other splice techniques.

Splice No. 4 (Cont.)

The ultimate strength of this splice has been calculated and found adequate. See Chapter 3 – Overload Illustration for calculations.

Calculate corbel reinforcing:
Area bearing plate = 24 sq. in.
P_u = 270 (0.95)(3)(0.153) = 118 k (See AASHTO Art. 1.6.17)
Working load per corbel = 148/2 = 74 kips
f_c bearing = 74/24 = 3080 psi. under plate.
f_c allowable = 3000 psi.
(See AASHTO, Art. 1.6.6) Overstress = 2.7 %
Considered safe with spiral containment.
Area corbel = 51 sq. in. Bearing on corbel at ultimate load = 118/51 = 2300 psi. ≦ 3000 psi.

Calculate ties required:
$A_{vf} = V_u/\phi f_y \mu$ AASHTO Art. 1.5.35
μ = 1.2, concrete interface to be roughened.
A_{vf} = 118,000/0.85 (40,000)(1.2) = 2.9 sq. in.
Strength required at yield = 2.9 (40,000) = 116 k
5 - #5 ties = 5 x 0.31 x 40 = 62 k
Expansion bolts, 5/8 φ use 80 % of allowable for reduced spacing in one direction. 10 x 7000 lb x 0.80 = 56 k
Total ea. side = 118 k ≧ 116 k

Use Grade 60 #5 ties for added strength across interface.

Also check shear along interface per AASHTO Art. 1.5.35 E. v_{u} allowable = 350 psi.
118,000/10 (36) = 330 psi. ≦ 350 psi.

Splice No. 5

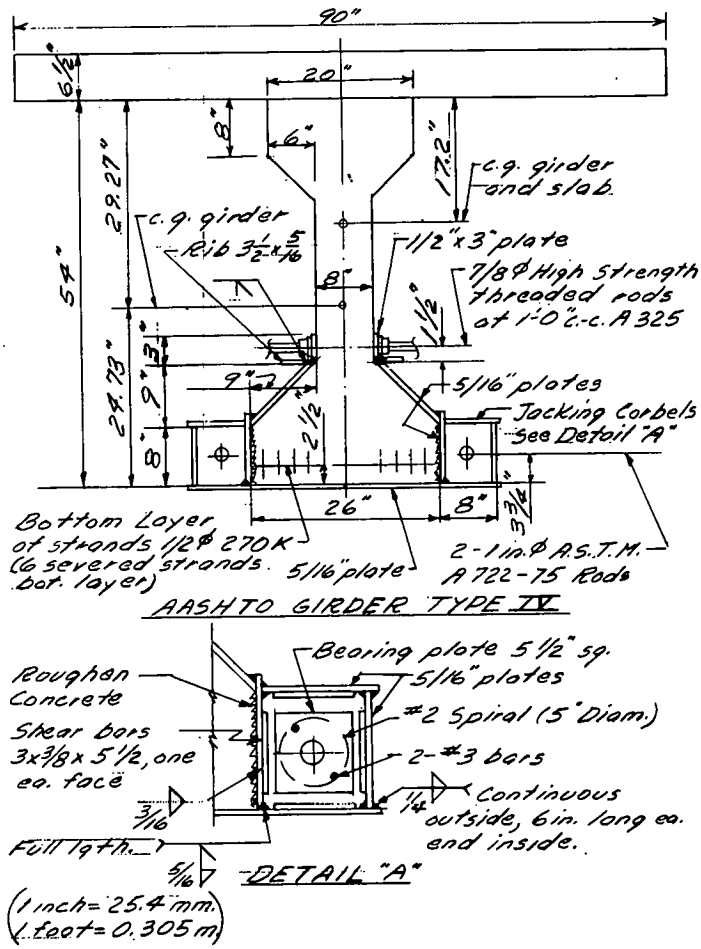

Figure 6. Splice 5.

A small amount of seating take-up could greatly reduce the amount of stress induced in either of these splices. Recommendation for the use of this splice is deferred until prior testing. The testing would be relatively easy to perform and could be done in a state materials laboratory.

Construction Procedure

1. Determine preload requirements (see section under "Preloading" in this chapter for guidance). If stresses permit, it is preferable to apply preload after splicing the strands.
2. Splice strands as previously described.
3. Apply preload.
4. Repair damaged concrete.
5. After concrete has gained required strength, remove preload.

Splice 7

Description

Splice 7 (Fig. 8) illustrates a method of splicing a single ½-in. 270 K strand. A number of strands could be spliced in one girder. One advantage of this splice is that it restores strength internally. Combined with preloading, it should completely restore the beam to its original condition. The strand spacing is assumed to be 2 in. both vertically and horizontally. This spacing is the predominant spacing used for ½-in. strands. It is possible that this method could be used for 1¾-in. strand spacing also.

The stressing is accomplished by torqueing the splice to approximately 22,000 lb, the working strength of one ½-in. 270 K strand. The severed strands must be accessible. If several strands must be spliced, splicing would start with the innermost strand first.

The only problem in developing this splice is the need for a modified strand grip. The required modification is not difficult. The outside diameter of most strand grips or strand splices is approximately 1⅝ in. This diameter is an approximate minimum when wedges are used to prevent splitting of the barrel due to the wedging action. A diameter of 1⅝ in. does not appear to cause a space problem for 2-in. strand spacing. One end of the barrel must be threaded inside to receive the splicing rod. The splicing rod must be large enough to permit insertion of the wedges. A 1-in. diameter rod ASTM A-722 Grade 150 is shown in Figure 8. The diameter could be increased or decreased slightly to facilitate splice details. The 1-in. diameter rod is only stressed to approximately 50 percent of capacity.

The alternate strand grip shown in Figure 8 may not

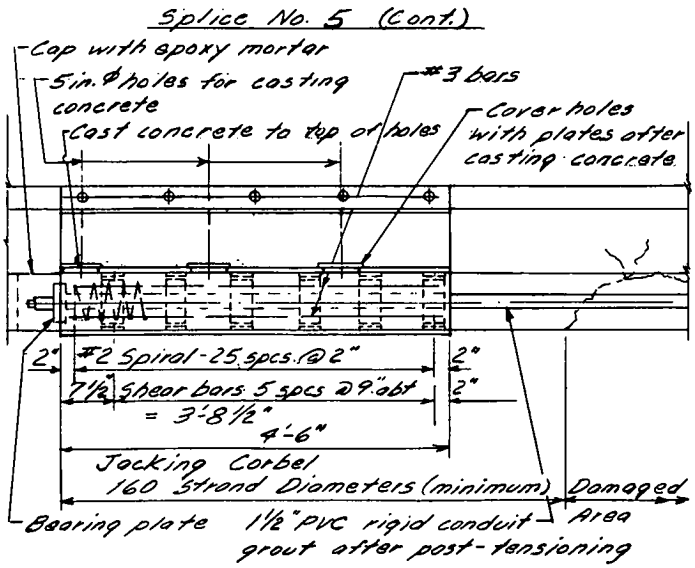

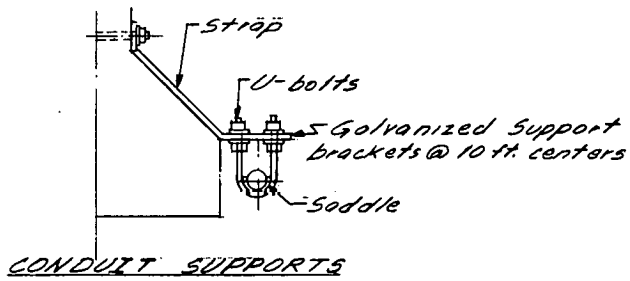

Splice No. 5 (Cont.)

f'c girder = 5000 psi. Ec slab assumed to be 0.8 x Ec girder.

Section Properties Girder:

A = 789 sq. in., I = 260,700 in.⁴, Sbot = 10,540 in.³

Section Properties Girder and Slab:

A = 1257 sq. in., I = 573,000 in.⁴, Sbot = 15,570 in.³

Live Load: Assume Span Length to be 85 ft.

Girder Spacing = 7'-6"

Moment one lane (AASHTO 1977) = 1255 k'(w/o Imp)

Distribution = 5/5.5 = 1.36

MLL+I = 1058 k'(HS 20)

ft bot. (composite section - girder and slab)

= 1058 (12)(1000)/15,570 = 815 psi LL+I

Assume 6 severed strands in bottom layer,

[0.7(270,000) - 95,000](6)(0.153) = 132 kips.

f bot. = P/A + M/S = 132,000/789 + 132,000(22.23)/10,540

= 167 psi + 278 psi = 445 psi.

Prestress Loss

Added prestress = 2-1 in. ϕ ASTM A 722-75 Rods Grade 160 (Smooth)

Use approximate working load = 0.6 f's

= 0.6 (160 ksi) = 96 ksi.

Assume conduit supports @ 10 ft. centers, bending stress ≅ 5.5 ksi.

∴ Working load 2-rods = (96 - 5.5)(0.785)(2)

= 142 kips

f bot. = P/A + M/S = 142/1257 + 142(33.0)/15,570

= 113 + 301 = 414 psi

Prestress Gain

414 psi ≅ 445 psi. ∴ 2-1 in. ϕ Grade 160 rods will replace approximately six severed ½ϕ 270K strands. Strands are assumed to be in bottom layer.

require any modification of the strand grip. The transition from strand to rod is accomplished by using two additional steel splices.

Construction Procedure

1. Determine preload requirements (see section under "Preloading" in this chapter for guidance). If stresses permit, it is preferable to apply preload after stressing the splices.
2. Assemble splice, locating splice sleeves and strand grips to allow seating of the strand grips and sufficient thread length in the splice sleeves.
3. Torque lubricated splice sleeve to approximately 22,000 lb (the working strength of one strand). The strand grips must be prevented from rotating during torqueing. A suitable means of measuring stress or load in the splice must be provided.
4. Repeat steps 2 and 3 for other severed strands.
5. Apply preload.
6. Repair concrete.
7. After concrete repair has gained required strength, remove preload.

Recommendation of the use of this splice is deferred until the following steps have been taken:

1. Formal contact has been made with strand splice manufacturers to determine their interest in development of the splice. In the event they are not interested, determine permissible use of patented parts.
2. The torqueing procedure has been tested and found to be practical. The use of this splice is encouraged on a test basis.

Splice 8

Description

Splice 8 (Fig. 9) illustrates the use of one 1-in. round high-strength bar to directly splice a pair of ½-in. 270 K strands. Several pairs of strands could be spliced in one girder. One advantage of this splice is that it restores strength internally. Combined with preloading, it should completely restore the beam to its original condition. Either horizontal or vertical pairs of bars could be spliced. The strand spacing is assumed to be 2 in. both vertically and horizontally. This spacing is the predominant spacing used for ½-in. strands.

The stressing is accomplished by torqueing the splice sleeve to approximately 44,000 lb, the working strength of two ½-in. 270 K strands. The strands must be accessible.

Splice No. 5 (Cont.)

Calculate approximate ultimate strength:
a = depth of equivalent compression zone
$a = A_s f_y / 0.85 f'_c b$, $f'_c = 4000$ psi., $b = 90$ in.

As 2 - 1 in.Ø rods = 1.57 sq. in.
$A_s f_y = 1.57(160)(0.85) = 213^k$
Assume 34 strands originally, with 6 severed.
Area strands = 28(0.153) = 4.28 sq. in.
$A_s f_y = 4.28(270)(0.85) = 982^k$

$a = (213 + 982)/0.85(4.0)(90) = 4.0$ in. approx.
Assume c.g. of 34 strands to be 6.0 in. above bottom of girder. c.g. of 28 strands is 6.75 in. above bottom of girder.

M_u rods = 213(54.7)/12 = $971^{k'}$
M_u strands = 982(51.7)/12 = $4231^{k'}$
Total = $5{,}202^{k'}$ Approx.
DL girder = 822 lb/ft., DL slab = 650 lb./ft.
$M_{DL} = 1329^{k'}$
M_u required = 1.3(DL + 5/3 LL + I)
= 1.3(1329 + 5/3(1058)) = $4020^{k'}$
∴ ultimate strength of splice is adequate.

Calculate Corbel reinforcing:
Area bearing plate = 30.2 sq. in., Area corbel = 54 sq. in.
$P_u = 0.785(160)(0.95) = 119^k$ (See AASHTO Art. 1.6.17)
Working load per corbel = 142/2 = 71 kips.
f_c bearing = 71/30.2 = 2350 psi. under plate
f_c allowable = 3000 psi (See AASHTO Art. 1.6.6
Bearing on corbel at P_u = 119/54 = 2200 psi.
(safe pressure)

Shear bars, 24 @ 3 x 3/8 x 5 1/2. Working load per corbel = $142/2 = 71^k$
$f_{bearing} = 71{,}000/24(3/8)(5\,1/2) =$
1440 psi ≦ 2000 psi. ≦ 0.4(5,000)
$f_{shear} = 71{,}000/24(6)(5\,1/2)$
= 90 psi ≦ 160 (AASHTO Art. 1.5.29 E)

Splice No. 5 (Cont.)

Tension in top bolts:
From epoxy injection pressure (see Splice No. 3); T ≅ 12/15(7500 lb) ≅ 6000 lb.

From post-tensioning:
$A_{vf} = V_u / \phi f_y \mu$ AASHTO Art. 1.5.35
$\mu = 1.2$, concrete roughened and epoxy grouted
$A_{vf}(f_y) = 119{,}000/0.85(1.2) = 117{,}000$ lb
1/2 load will be carried by bottom plate
117,000/2 = 58,500 lb. Force/in = 58,500/54"
= 1080 lb/in
7/8 Ø High strength bolts at 1'-0 c.-c. A325
P/bolt = 1080(12) + 6000 lb = 19,000 lb
f = P/Anet = 19,000/0.419 = 45 ksi.
Allowable = 67 ksi (AASHTO Art. 1.7.71)
Bolts are not stressed fully to allow for added tension across interface, see AASHTO Art. 1.5.35 D.

Also check shear along interface per AASHTO Art. 1.5.35 E. V_u allowable = 350 psi.
119,000/8"(54") = 275 psi. ≦ 350 psi

The major problem in developing this splice is the need for a strand grip with a maximum outside diameter of 1⅛ in. The strand grips (or chucks) used at most prestressing plants are 1 11/16-in. outside diameter. Shorter strand grips are available and used on a one-time basis; however, these grips are 1⅝-in. outside diameter. Smaller diameter grips have been used, but contacts with industry representatives indicate that these grips are extruded and pressure fitted to the strand ends. The same industry representatives believe that it would be impractical to attempt this process in the field.

Spreading the ends of the strands apart in order to use larger strand grips has been reviewed and rejected on the basis of high flexural stresses in the strands. These stresses could be reduced by increasing the length of exposed strand between the transfer plate and the face of the concrete. However, calculations indicate that at least 2 ft (0.61 m) would be required to reduce the additional flexural stress in the strands to several thousand psi.

The materials used in the splice are not unusual. The 1-in. round rod should be ASTM A-722 Grade 160. The rod is turned down to 13/16-in. round at each end to save space. The taper at the transition point should be not more than 2½:1. The splice sleeve, transfer plate and even the rod grip nuts can be fabricated from ASTM A-517 steel. Some machine work is necessary, but not impractical.

Splice No. 6

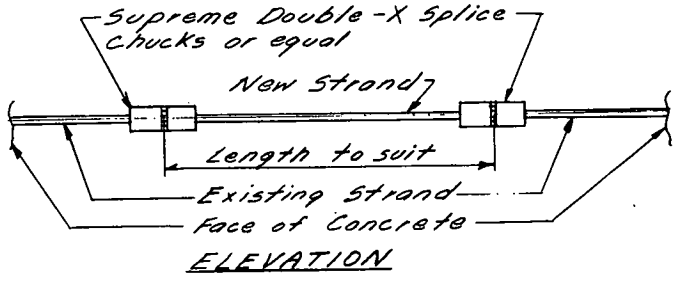

$f_s = E\Delta/L$
E = 28,000,000 psi.
Δ/L = 0.0000065 per degree Fahrenheit
$f_s = (28{,}000{,}000)(0.0000065)(400°)$

f_s = 73,000 psi. (Assuming no slip during strand contraction).

(1 inch = 25.4 mm.
1 foot = 0.305 m.)

Figure 7. Splice 6.

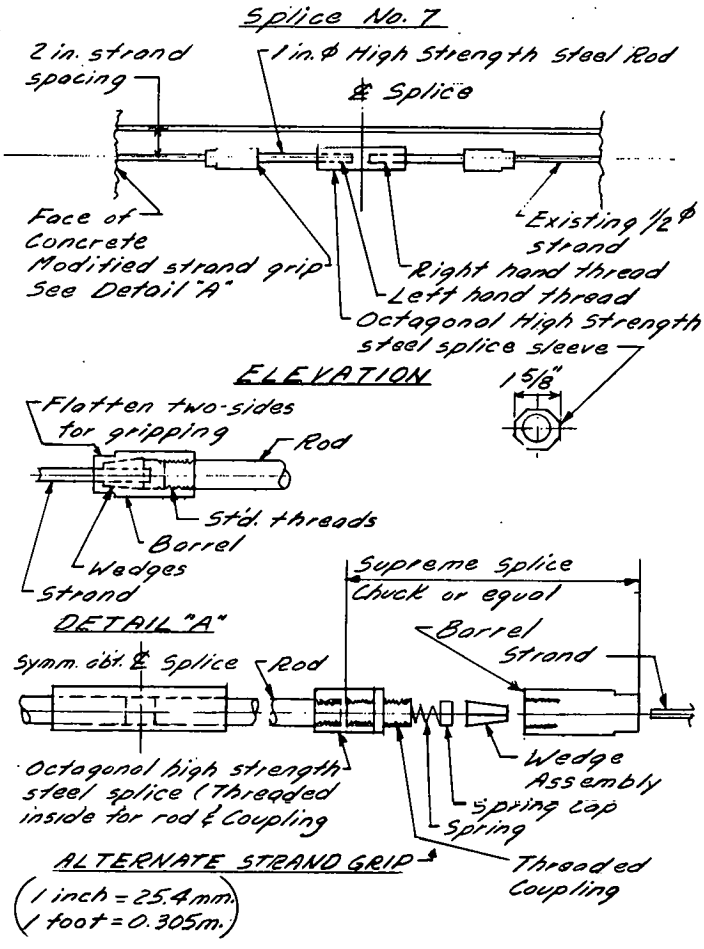

Figure 8. Splice 7.

Construction Procedure

1. Determine preload requirements (see section under "Preloading" in this chapter for guidance). If stresses permit, it is preferable to apply preload after stressing the splices.
2. Insert rods through transfer plates and tighten tapered grip nuts.
3. Slide transfer plates over strand ends.
4. Install splice sleeves and strand grips, locating both to allow ample take-up in the splice and sufficient thread in the splice sleeve.
5. Torque lubricated splice sleeve to approximately 44,000 lb (the working strength of two strands). A groove has been provided to prevent the grip nuts from turning when torque is applied. The transfer plates must be prevented from rotating. A suitable means of measuring stress in the rods or splice must be provided.
6. Repeat steps 2 through 5 with other pairs of severed strands.
7. Apply preload.
8. Repair concrete.
9. After concrete repair has gained required strength, remove preload.

Recommendation for the use of this splice is deferred until the following steps have been taken:

Splice No. 7 (Cont.)

Working strength per strand =
[0.7(270,000 - 45,000](0.153) = 22 Kips/strand.

Splicing rod = 1-in.ϕ threaded rod A.S.T.M. A722 Grade 150, f's = 150,000 psi.
Anet = 0.551 sq. in.
fs allowable = 0.6 (150,000) = 90,000 psi
fs @ working load = 22,000/0.551 = 40,000 psi
40,000 ≦ 90,000.

Ultimate strength of 1/2 in.ϕ 270K strand
= 270,000 (0.153) = 41,300 lb.

Ultimate strength of splicing rod
= 150,000 (0.551) = 82,600 lb.
fs @ ultimate load = 41,300/0.551 = 75,000 psi.
75,000 psi ≦ 150,000 psi.

1. The torqueing procedure has been tested and found practical.
2. Knowledge that a suitable strand grip can be developed or is available.

Splice 9

Description

Information received from Mr. Moore of K & M Stress, Inc. in Emeryville, Calif., shows that they have a method of splicing high-strength rods in place. They use a patented hydraulic scissors jack to restore stress in severed rods and the rods are spliced with Howlett couplers. The procedure consists of attaching Howlett couplers (or equivalent) to each side of the damaged bar, placing a short length of prestressing rod inside these couplers and tensioning the in-place bar using a scissor jack arrangement. The jacking procedure is to stress the existing bar, hold that stress by tightening the new section of bar, and then release the jack. This procedure is repeated several times.

This splicing technique was used at the Springs Road Overcrossing on Route 80 in Vallejo, Calif. The California State Transportation Department has confirmed the splicing of high-strength prestressing rods.

Construction Procedure

1. Determine preload requirements (see section under "Preloading" in this chapter for guidance). If stresses permit, it is preferable to apply preload after stressing the rods.
2. Stress rods as previously described.
3. Apply preload.
4. Repair concrete.
5. After concrete has gained required strength, remove preload.

This splice appears suitable for splicing high-strength rods. Complete information, such as calculations, plans, stresses, and space requirements, has not been available. The use of this splice is based on the user's verification of necessary information.

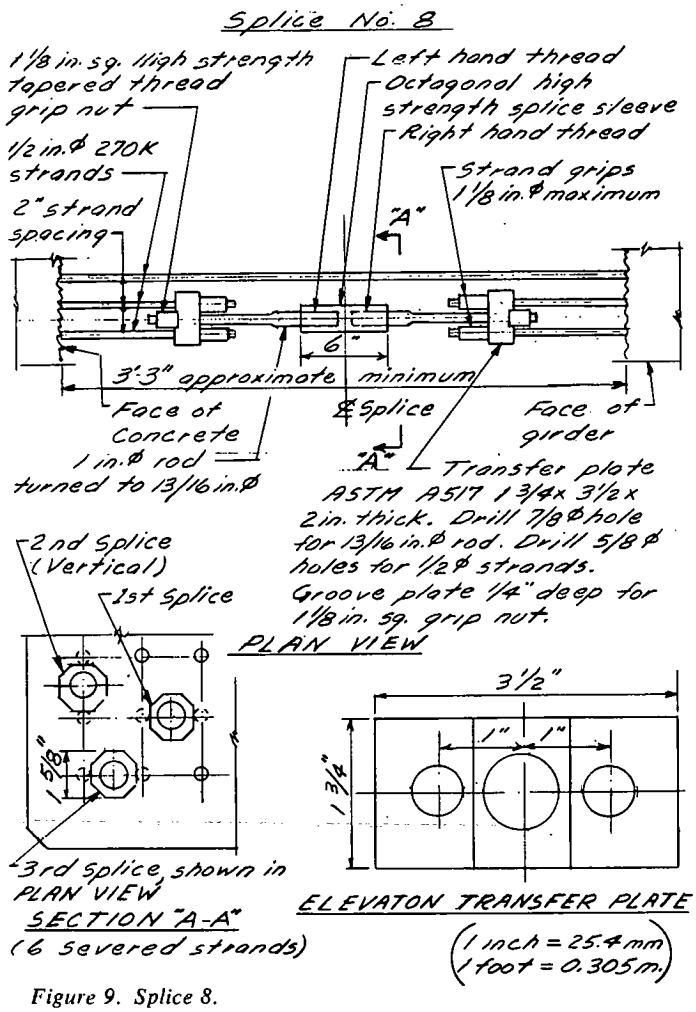

Splice No. 8 (Cont)

Working strength per 1/2 Ø 270 K strand = [0.7(270,000) − 45,000] 0.153 = 22 kips/strand.

Working stress per splicing rod, ASTM A722 Grade 160:
Working stress = 0.6 (160,000) = 96,000 psi.
One 1-in.Ø threaded rod, Anet = 0.551 sq. in.
Splicing two strands fs = 22,000(2)/0.551 = 79,900 psi. ≦ 96,000 psi.
One 13/16 in.Ø rod, tapered thread, Agross = 0.518 sq. in.
Splicing two strands fs = 22,000(2)/0.518 = 85,000 psi ≦ 96,000 psi.

Ultimate strength per 1/2 Ø 270 K strand = 270,000 (0.153) = 41.3 kips/strand

Ultimate stress per splicing rod = 160,000 psi.
One 13/16 in Ø rod, tapered thread, Agross = 0.518 sq. in.
Splicing two strands fs = 41,300(2)/0.518 = 159,500 psi ≦ 160,000 psi.

Transfer plate, ASTM A517 1 3/4 x 3 1/2 x 2 in. thick. (Net width = 1 3/4" − 7/8" = 7/8", net thickness = 2" − 1/4" groove = 1 3/4")
S = bd²/6 = 7/8(1 3/4)²/6 = 0.447 in.³
Working strength moment = PL/4 = 22(2)(2)/4 = 22 kip in.
fs = M/S = 22/0.447 = 49 ksi.
fs allowable AASHTO Table 1.7.1A = 55 ksi.

Ultimate strength moment = PuL/4 = 41.3(2)(2)/4 = 41.3 kip in.
fs = Mu/S = 41.3/0.447 = 93 ksi.
fs allowable AASHTO Table 1.7.1A, Fy = 100 ksi.

Figure 9. Splice 8.

Splice 10

The state transportation department of Connecticut has added posttensioned rods to repair a damaged girder. The damaged bridge was the I-95 westbound bridge over Groton Reservoir. The damage was due to a construction defect; however, a similar technique could be used to repair a girder damaged by an overheight vehicle or other causes.

Four ⅞-in. round high-strength rods were used to restore strength to the damaged girder. The rods were located adjacent to the bottom flange of the girder with two rods on each side of the girder. The rods were anchored and stressed against bearing plates at the girder ends. The girder ends were notched so that each of the bearing plates was in partial bearing against the girder ends. The bearing plates were held transversely across each girder end with high-strength bolts.

All steel material, including the high-strength rods, was galvanized and painted.

One advantage of this splice is the placement of the rods near the bottom of the girder, which increases their structural efficiency. The center of gravity of the rods is about 4 in. above the bottom of the girder. One disadvantage of this splice is the necessity for access and clearance at the girder ends. The range of applicability for this repair method may be low. Another probable disadvantage is the life of the galvanized and painted high-strength rods. Corrosion of prestressing elements is considered to be more critical than corrosion of mild steel. Despite the use of galvanizing, maintenance of all steel material may be required to ensure that the life of the repair is equal to the life of the original girder. Maintenance access to the transverse tie plates at the girder ends will be difficult. The use of this splice is recommended provided users accept the responsibility for maintenance.

Suggested Construction Procedure

1. Determine preload requirements (see section under "Preloading" for guidance).
2. Apply preload if required.
3. Repair damaged concrete.
4. After concrete has gained required strength, remove preload.
5. Proceed with posttensioning details.

This repair represents the type of innovative thinking and

use of methods to repair girders in place that should be encouraged.

Splice 11

The state transportation department of South Carolina has added posttensioned rods to repair girders damaged by overheight vehicles. At the Eagle Drive Underpass on I-26 in Charleston County, 15⅜-in. round strands were severed out of a total of 58 strands. The damage occurred at the quarter point of the span. This repair method has been used at two or more bridges. It is being considered for additional use.

Two 1⅛ in. round high-strength rods were used to restore strength to the damaged girder. Steel jacking corbels were placed on the top sloping surface of the bottom flange on each side of the girder. Each jacking corbel was 8 ft 1¼ in. (2.47 m) long. The anchor-to-anchor distance was approximately 22 ft 0 in. (6.71 m). The rods were anchored and stressed against 2-in. thick bearing plates at the corbel ends. All material was shop and field painted.

The jacking corbels were three plates shop welded together to form a channel-shaped section. The base plate was 7 in. by ¾ in. This plate was bolted to the girder flange with a single row of 14 ¾-in. Phillips Red Head anchors spaced at 7-in. centers. Sufficient depth of anchorage must be provided to develop the strength of these anchors. Care was taken in locating the corbel and in drilling holes for the anchors to avoid girder prestressing strands. A metal drilling template was used to ensure accurate location of holes. A 7-in. by ⅛-in. thick neoprene sheet was used between the base plate and the girder flange. The primary reason for the neoprene sheet was to minimize the effect of minor irregularities in the concrete surface. The side plates were each 6 in. by ¾ in. thick. The width of the side plates tapered from 6 in. near the jacking end of the corbel to 1 in. at the opposite end.

This splice is economical and relatively easy to install. One pertinent comment by the state bridge construction engineer was that repair-in-place methods posed less hazard to motorists than replacing a girder. This splice should have a wide range of applicability provided the anchors can be located to avoid the existing strands. One disadvantage of this splice is the life of the high-strength painted rods. Corrosion of prestressing elements is considered to be more critical than corrosion of mild steel. Maintenance of all steel material will be required to assure that the life of the repair is equal to the life of the original girder.

No recommendation is made regarding the use of this splice in its present form. The life of this splice will depend on climatic conditions and/or the acceptance of agency responsibility for maintenance.

It is recommended that the durability of this splice be improved by encasing the rods in PVC conduits (see splice 5) and pressure grouting the conduits after posttensioning. The conduits may need to be supported at intervals. A short length of the jacking corbel channels at the anchor ends should be filled with epoxy mortar. An epoxy mortar cap should cover the ends of the rods. All structural steel should be galvanized. In addition, it may be painted.

Suggested Construction Procedure

1. Determine preload requirements (see section under "Preloading" in this chapter for guidance).
2. Apply preload if required.
3. Repair damaged concrete.
4. After concrete has gained required strength, remove preload.
5. Proceed with posttensioning details.

If the foregoing recommendations are followed, this splice is recommended for use. It represents a method of repairing girders in place that should be encouraged.

Preloading

Preload is simply the application of a temporary vertical load during the repair-in-place of a damaged prestressed member.

There have been damage incidents where a significant portion of girder concrete has been lost, but few, if any, of the prestressing elements severed. Preloading can be used in many instances to restore the girder to its original condition without adding prestress.

The section properties of the remaining cross section of the girder should be computed. If the maximum allowable compressive stress in the reduced bottom flange is exceeded, enough preload during repair must be applied to bring this stress within allowable limits. Assuming the beam is a simple span, the maximum compressive stress would occur under dead load (live load would reduce the stress).

Preload may be used to restore partial or full prestress to the repaired area, which may be needed to reduce or eliminate tension under live load plus impact. The restoring of prestress is also very valuable from a durability standpoint. The need for preload should be calculated for any girder that is repaired in place and has a significant loss of concrete. Preloading may also improve the repair of girders with severed strands. Care should be taken not to apply excessive preload to the point where cracking of the remaining girder section may occur. Figures 10 through 13 show examples of preload.

Dead load weight of curb and rail base is not included in the examples. For actual bridge repair designs, any portion of curb and rail base weight carried by the beam being repaired should be included in the calculations. Normally this weight acts on the composite section.

Preload may be applied either by means of a loaded vehicle or by vertical jacking. One means of providing preload by jacking is shown in Figure 14. Providing preload as shown in Figure 14 requires less roadway width, which could be an advantage. If preload is provided by a single jack, consideration should be given to the temporary stresses induced in other bridge elements. Part of the jacking load will be transferred through the slab and diaphragms to adjacent girders. If a conclusion is reached that this transfer of stress will cause excessive stress in the slab and diaphragms, more than one jack should be used, with reasonable longitudinal spacing (14 ft (4.27 m) is suggested).

Preload No. 1
(No severed strands)

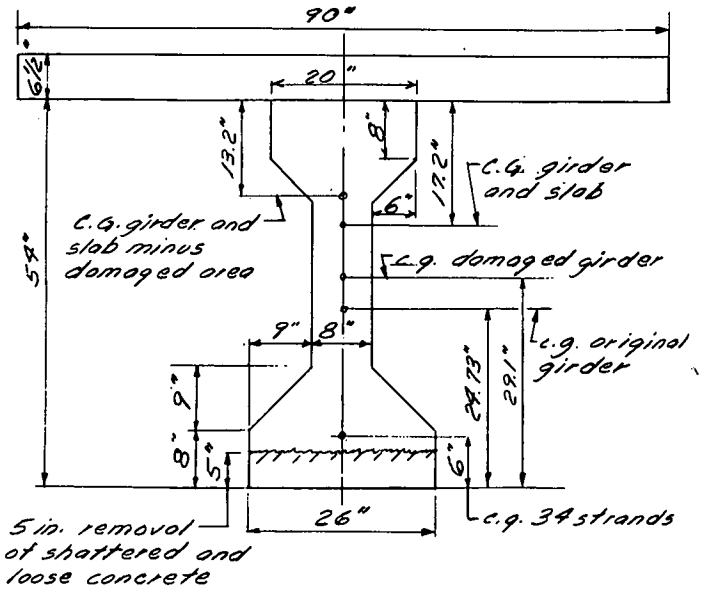

AASHTO GIRDER TYPE IV

(1 inch = 25.4 mm.
1 foot = 0.305 m)

Preload No. 1 (Cont.)

f'c girder = 5000 psi. Ec slab assumed to be 0.8 × Ec girder.
Section properties girder:
A = 789 sq. in., I = 260,700 in.⁴, Sbot = 10,540 in.⁴
Section properties of girder and slab:
A = 1257 sq. in., I = 573,000 in.⁴, Sbot = 15,570 in.³
Section properties of damaged girder:
A = 659 sq. in., I = 184,000 in.⁴, S bottom of damaged section = 7610 in.³
Section properties of girder and slab minus damaged area:
A = 1127 sq. in., I = 402,000 in.⁴, S bottom of damaged section = 11,230 in.³

Live Load: Assume span length to be 85 ft.
Girder spacing = 7'-6"
Distribution = 5/5.5. = 1.36
M_{LL+I} = 1058 ᵏⁱ (H520)

f bot LL+I, girder and slab = 1058(12)/15570 = 815 psi.
f bot LL+I, damaged girder and slab
= 1058 (12)/11,230 = 1130 psi

DL girder = 822 lb/ft., DL slab = 650 lb/ft.
M_{DL} = 1329 ᵏⁱ

f bot, DL acting on undamaged girder
= 1329 (12)/10,540 = 1513 psi.

f bot, prestress acting on undamaged girder
= P/A + M/S = 34 (22ᵏ/strand)/789 + 748(18.73)/10,540
= 948 + 1330 = 2278 psi.

f bot DL + LL+I + Prestress, acting on the undamaged girder = ᵀ1329 psi + ᵀ815 psi + ᶜ2278 psi = 50 psi tension

Preload No. 1 (Cont.)

Depending on the length of damaged area and number of exposed strands, stress redistribution upward through the roadway slab may or may not occur. If in doubt the following alternate calculations are recommended.

1) Assume that prestress plus dead load of girder and slab act on the damaged girder section alone.

2) Assume that prestress plus dead load of girder and slab act on the composite damaged girder and slab.

1) fc bot. prestress = 748/659 + 748(23.1)/7610
= 1135 + 2270 = ᶜ3405 psi.
ft bot. dead load = 1329(12)/7610 = ᵀ2096 psi.
Total = ᶜ1309 psi.

2) fc bot. prestress = 748/1127 + 748(34.8)/11230
= 664 + 2320 = ᶜ2984 psi.
ft bot. dead load = 1329(12)/11,230 = ᵀ1420 psi.
Total = ᶜ1564 psi.

Allowable fc = 0.4 f'c = 0.4(5000) = 2,000 psi
∴ preloading is not needed in this case to reduce compressive stresses at the bottom of the damaged section.

Determine the amount of prestress that could be restored by preloading:
fc bot. of damaged section due to dead load plus prestress = ᶜ1309 psi. minimum.
ft, bot. of damaged section due to full LL+I = ᵀ1130 psi. (load acting on composite damaged section)
1309 psi compression minus 1130 psi. tension = 179 psi compression. Therefore the girder could be preloaded for full LL+I, and original prestress restored at bot. of patched area.

Preload No. 1 (Cont.)

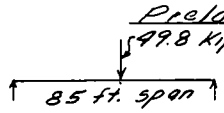

$P = 4 M_{LL+I}/\ell = 4(1058)/85$
= 49.8 kips

If preloading is not used, the tensile stress in the repaired area at the bottom of the girder would be 815 psi, the tensile stress due to LL+I. The normal allowable tension = $6\sqrt{f'_c}$ (AASHTO Art. 1.6.6 (B).
$6\sqrt{f'_c} = 6\sqrt{5000}$ = 424 psi. 815 psi − 424 psi. = 391 psi. greater than allowable. Or 815 psi tension ≅ $11.5\sqrt{f'_c}$, which is exceedingly high (see AASHTO Art. 1.6.6 B), and would likely crack the repaired area.

Overloads would increase the probability of cracking.

Therefore preloading is necessary and should be placed on the girder prior to replacing the lost concrete. The preload should remain on the girder until the repair has gained required compressive strength.

Figure 10. Preload 1.

Preload No. 2

4 severed strands in the bottom layer
Splice No. 2 being used.

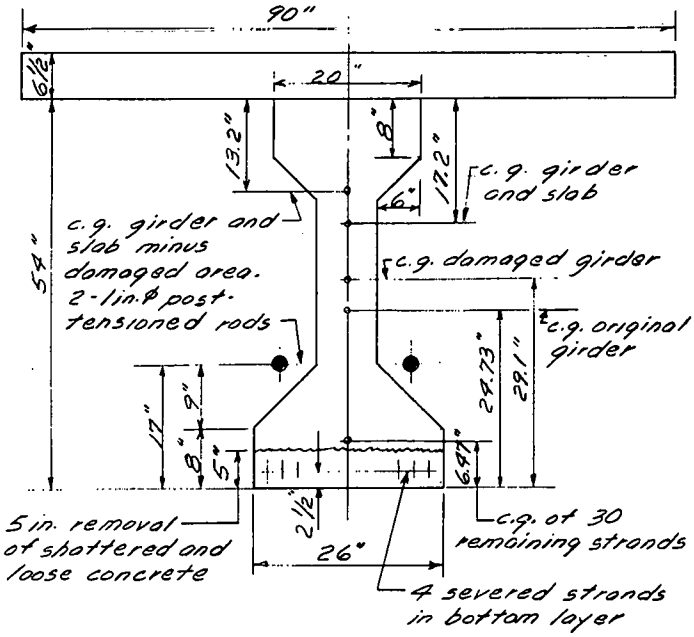

AASHTO GIRDER TYPE IV

(1 inch = 25.4 mm.
1 foot = 0.305 m)

Preload No. 2 (Cont.)

1) Assume that prestress plus dead load of girder and slab act on the damaged girder section alone:

fc bot. prestress = 30(22)/659 + 660(22.63)/7610
= 1000 psi + 1960 psi = ^{c}2960 psi.
ft bot. dead load = 1329(12)/7610 = ^{T}2100 psi.
Total = ^{c}860 psi.

2) Assume that prestress plus dead load of girder and slab act on the composite damaged girder and slab:

fc bot. prestress = 30(22)/1127 + 660(34.33)/11,230
= 586 psi. + 2018 psi = ^{c}2604 psi.
ft bot. dead load = 1329(12)/11,230 = ^{T}1420 psi.
Total = ^{c}1184 psi.

Additional stress needed to reduce tension to 50 psi. under LL+I = 815 psi − 293 psi − 50 psi = 472 psi.
M = fS = 0.472(15,570)/12 = 612 ki
P = 4M/ℓ = 4(614)/85 = 28.9 k
28.9 kips preload per girder
85 ft. span

ft preload at bottom of damaged section = M/S = 612(12)/11,230 = ^{T}654 psi.
Minimum compression at bottom of damaged section = ^{c}860 psi − ^{T}654 psi = ^{c}206 psi. (with 28.9 kips preload).

Preload No. 2 (Cont.)

f'c girder = 5000 psi. Ec slab assumed to be 0.8 × Ec girder
Note:
Girder, span length, girder spacing, loading and section properties are the same as Preload No. 1.
M_{LL+I} = 1058 ki
M_{DL} = 1329 ki

Compression at the bottom of the damaged girder will not be excessive. The loads and damaged area are the same as Preload No. 1, and the remaining prestress is less.

1) Determine if preloading is required:
The only prestress at the bottom of the girder in the damaged area will be that furnished by the 2-1 in.ϕ post-tensioned rods.
fc post-tensioning = P/A + M/S
= 142/1257 + 142(19.8)/15,570 = ^{c}293 psi.
ft LL+I = M/S = 1058(12)/15,570 - - - = ^{T}815 psi
Total = ^{T}522 psi

Assume allowable tension = $6\sqrt{f'c}$
= $6\sqrt{5000}$ = 424 psi.
Net = 98 psi.

2) Determine if preloading plus the added post-tensioning can reduce the LL+I tensile stress to 50 psi., the same as the original girder design.

Preload No. 2 (Cont.)

Review result:
f at bot. of repaired girder = ft LL+I + fc post-tensioning + fc preload
= ^{T}815 psi + ^{c}293 psi + ^{c}472 = ^{T}50 psi.

∴ Post-tensioning plus preload restores the full loss of prestress due to 4 severed strands plus loss of concrete section.

Procedure:
Place preload prior to replacing the lost concrete. Keep preload on the girder until the repair has gained required compressive strength. Remove preload and proceed with post-tensioning.

Figure 11. Preload 2.

Preload No. 3

10 severed strands in the bottom layer
Splice No. 3 being used

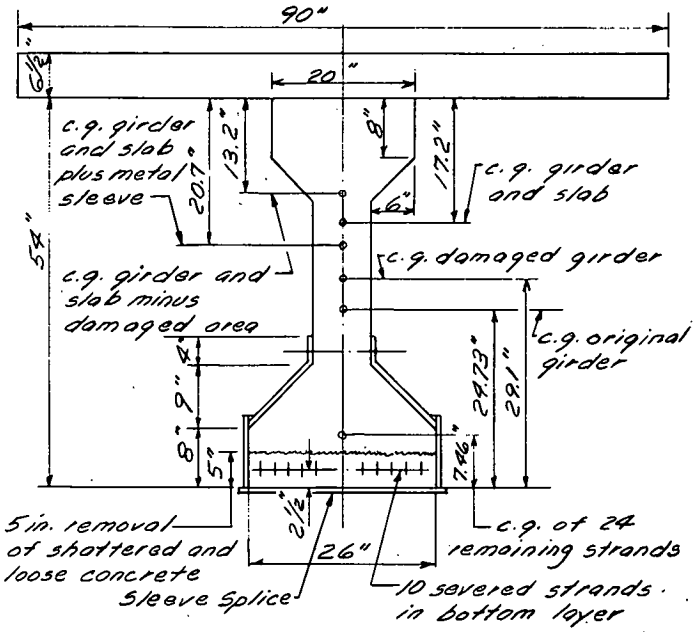

AASHTO GIRDER TYPE IV

(1 inch = 25.4 mm.
1 foot = 0.305 m.)

Preload No. 3 (Cont.)

f'c girder = 5000 psi. Ec slab assumed to be 0.8 × Ec girder.
Note:
Girder, span length, girder spacing, loading and section properties (prior to placing metal sleeve) are the same as Preload No. 1.
$M_{LL+I} = 1058^{k'}$
$M_{DL} = 1329^{k'}$

Compression at the bottom of the damaged girder will not be excessive. The loads and damaged area are the same as Preload No. 1, and the remaining prestress is less.

Assuming preloading is not used, there will be no prestress at the bottom of the girder in the damaged area.

Section Properties of entire composite girder including metal sleeve:
As sleeve = 25.4 sq. in.
n = 6.8 for f'c = 5000
Ac sleeve = 6.8(25.4) = 173 sq. in.

Atotal = 1257 + 173 = 1430 sq. in., Itotal = 710,000 in.⁴
S bot. of girder = 21,310 in.³
S bot. of metal sleeve = 21,110 in.³

$f_{t\,LL+I}$ = 1058(12)/21,310 = ᵀ596 psi.
Determine if preloading can reduce the LL+I tensile stress to 50 psi., the same as the original design:

Preload No. 3 (Cont.)

1) Assume that prestress plus dead load of girder and slab act on the damaged girder section alone:

fc bot. prestress = 24(22)/659 + 528(21.6)/7610
= 800 psi + 1500 psi = ᶜ2300 psi.
ft bot. dead load = 1329(12)/7610 = ᵀ2095 psi.
Total = ᶜ205 psi.

2) Assume that prestress plus dead load of girder and slab act on the composite damaged girder and slab:

fc bot. prestress = 24(22)/1127 + 528(33.34)/11,230
= 468 + 1567 = ᶜ2035 psi.
ft bot. dead load = 1329(12)/11,230 = ᵀ1420 psi
Total = ᶜ615 psi.

Additional stress needed to reduce tension to 50 psi. under LL+I = 596 − 50 = 546 psi.
M = fS = 0.546(15,570)/12 = 708 ᵏ'
ft at bot. of damaged section due to M = 708 ᵏ'
= 708(12)/11230 = ᵀ757 psi.
Total tension = ᵀ757 − ᶜ205 = ᵀ552 psi.

This tension is considered to be too high. If the concrete is sound and no cracks present at the top of the damaged area, a temporary tension of $6\sqrt{f'c}$ = 424 psi should be acceptable.
Allowable ft = 424 + 205 = 629 psi. Allowable Moment = 629/757 (708) = 588 ᵏ'. Allowable preload:
P = 4M/ℓ = 4(588)/85 = 27.7 ᵏ
27.7 kips preload per girder.

85 ft. span

Preload No. 3 (Cont.)

Review result:
Amount of prestress restored
= 588 (12)/15,570 = 453 psi.
Final stress at bottom of girder after installing splice sleeve = $f_{t\,LL+I}$
− fc preload = ᵀ596 − ᶜ453 = ᵀ143 psi
143 − 50 = ᵀ93 psi more tension than the original girder design. Therefore preload restores 93 psi less than full prestress.

Assume preloading is not used:
Since no compression is induced by preloading the tensile stress will simply be $f_{t\,LL+I}$ = ᵀ596 psi. at the bottom of the repaired girder. The stress at the bottom of the metal sleeve = $f_{t\,LL+I}$
= M(n)/S = 1058(6.8)(12)/21,110 = 4.1 ksi.

The stress in the concrete at the top of the metal sleeve assuming dead load plus prestress acting on the damaged section is:
$f_{t\,LL+I}$ = My/I = 1058(12)(12.3)/710,000 = ᵀ220 psi.
$f_{t\,DL}$ = My/I = 1329(12)(8.1)/184,000 = ᵀ702 psi
fc prestress = P/A + My/I
= 528/659 + 528(21.64)(8.1)/184,000 = ᶜ1304 psi.
Total = ᶜ382 psi.

The tension of 596 psi. at the bottom of the girder is higher than the normal allowable stress of $6\sqrt{f'c}$ = 424 psi. However the damaged area is encased by the metal sleeve. There is a compressive stress at the top of the sleeve of 382 psi. The stress in the metal sleeve is 4.1 ksi. Any potential cracking will be confined within the area of the sleeve.

Figure 12. Preload 3.

Preload No. 3 (Cont.)

Based on the preceding calculations it is our opinion that preloading is desireable since it more nearly restores the girder to its original condition, but that preloading is not an absolute necessity.

Preferable procedure:
Place preload prior to replacing the lost concrete. Keep preload on the girder until the concrete repair has gained required strength. Remove preload and proceed with installation of the metal sleeve.

Preload No. 4

3 Severed strands in the bottom layer
Splice No. 4 being used

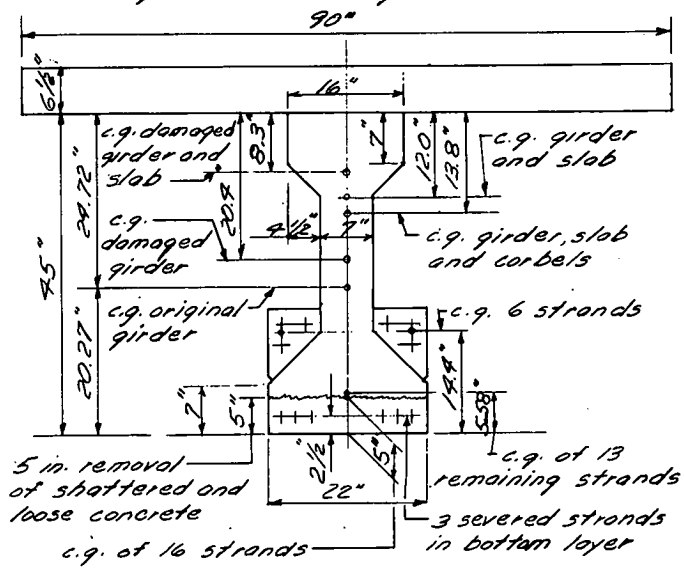

AASHTO GIRDER TYPE III

(1 in. = 25.4 mm.
1 foot = 0.305 m.)

Preload No. 4 (Cont.)

f'c girder = 5000 psi. Ec slab assumed to be 0.8 x Ec girder.
Section properties girder:
A = 559.5 sq. in., I = 125,400 in.^{4}, Sbot = 6190 in.^{3}
Section properties of girder and slab:
A = 1027 sq. in., I = 326,600 in.^{4}, Sbot. = 9895 in.^{3}
Section properties girder, slab and corbels:
A = 1129 sq. in., I = 361,500 in.^{4}, Sbot. = 11,550 in.^{3}
Section properties of damaged girder:
A = 449 sq. in., I = 81,800 in.^{4}, Sbot. = 4170 in.^{3}
Section properties of girder and slab minus damaged area:
A = 917 sq. in., I = 212,000 in.^{4}, Sbottom (of damaged girder) = 6680 in.^{3}

Live load: Assume span length to be 60 ft.
Girder spacing = 7'-6"
Distribution = 5/5.5 = 1.36
M_{LL+I} = 697 k' HS20

f bot. LL+I, girder and slab = 697(12)/9895 = 845 psi.
f bot. LL+I, acting on girder, slab and corbels = 697(12)/11,550 = ^{T}724 psi.

DL girder = 583 lb./ft. DL slab = 650 lb./ft.
M_{DL} = 555 k' ft = 555(12)/6190 = ^{T}1076 psi.

f bot., original prestress (16 strands) acting on undamaged girder = P/A + M/S = 16(22)/559 + 16(22)(15.27)/6190 = ^{C}1498 psi.

f bot DL + LL+I + Prestress (prior to damage) = ^{T}1076 + ^{T}846 + ^{C}1498 = 424 psi. tension
Assume allowable = 6 $\sqrt{f'c}$ = 6$\sqrt{5000}$ = ^{T}424 psi.

Figure 13. Preload 4.

Preload No. 4 (Cont.)

1) Assume that prestress plus dead load of girder and slab act on the damaged girder section alone:

f_c bot. prestress $= 13(22)/449 + 13(22)(19.0)/4170 = {}^{c}1940$ psi.

f_t bot. girder $= 555(12)/4170 = {}^{T}1597$ psi. (DL)

$f_{total} = {}^{T}1597 + {}^{c}1940 = {}^{c}343$ psi.*

2) Assume that prestress plus dead load of girder and slab act on the composite damaged beam:

f_c bot. prestress $= 13(22)/917 + 13(22)(31.1)/6680 = {}^{c}1643$ psi.

f_t bot. of girder $= 555(12)/6680 = {}^{T}997$ psi (DL)

$f_{total} = {}^{T}997 + {}^{c}1643 = {}^{c}646$ psi.*

Allowable $f_c = 0.4 f'_c = 0.4(5000) = {}^{c}2000$ psi.
Therefore preloading is not needed in this case to reduce compressive stresses.

Assume preloading is not used:
The only prestress at the bottom of the girder in the patch area will be that furnished by the 6 post-tensioned strands:

f_c bot. of girder prestress $= 148/1129 + 148(16.9)/11{,}550 = {}^{c}348$ psi. $f_{t\,LL+I} = 697(12)/11550 = {}^{T}724$ psi.

$f_{total} = {}^{T}724 - {}^{c}348 = {}^{T}376$ psi.

Assume allowable tension $= 6\sqrt{f'_c} = 424$ psi.
Therefore the girder has been restored to its original condition and preloading is not needed.

*The weight of the corbels are assumed to act on the composite damaged section and will reduce the compressive stress in the damaged portion from ${}^{c}343$ to ${}^{c}269$ or ${}^{c}646$ to ${}^{c}572$ (psi). $f_{bot\ corbel\ DL} = (91.2)(12)/6680 = {}^{T}74$ psi.

Preload No. 4 (Cont.)

If for any reason the corbels are not cast prior to casting the girder concrete patch, then the weight of the corbels will also produce tension in the concrete patch.

$f_{t\,DL\ corbels} = M/S = 91.2(12)/9895 = {}^{T}50$ psi.

The total tension at the bottom of the girder in the damaged area would then be ${}^{T}376 + {}^{T}50 = {}^{T}426 \cong {}^{T}424$ psi. allowable.

At a section adjacent to the damaged area, the stresses after repair are:

$f_{t\,DL} = M/S = 555(12)/6190 = {}^{T}1076$ psi

$f_{t\,DL\ corbels} = {}^{T}50$ psi.

$f_{t\,LL+I} = M/S = 697(12)/11{,}550 = {}^{T}724$ psi.

f_c bot. (13 strands) $= P/A + M/S$
$= 13(22)/559 + 13(22)(14.7)/6190 = {}^{c}1190$ psi.

f_c bot. (added prestress) $= P/A + M/S$
$= 148/1129 + 148(16.9)/11{,}550 = {}^{c}348$ psi.

Total $= {}^{T}312$ psi.

Assumed allowable $= {}^{T}424$ psi.

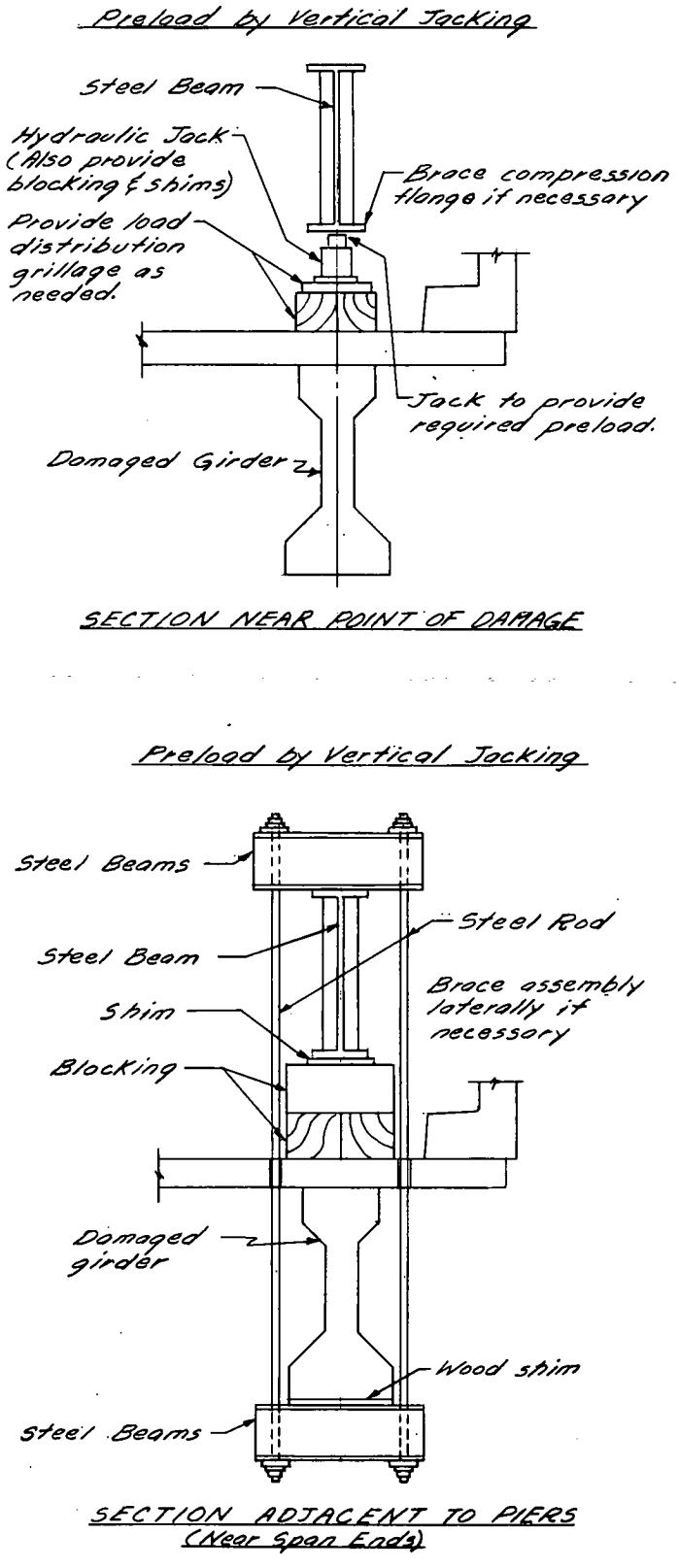

Figure 14. Preload by vertical jacking.

Measuring flexural elongation with a strain gage or similar device is probably the most accurate way of determining the actual amount of preload being carried by the damaged beam. If preload is applied with a loaded truck (or trucks) having weight distribution similar to AASHTO HS loadings, AASHTO distribution factors are considered to be sufficiently accurate to determine the preload carried by a particular girder.

The transportation departments of Florida, Washington, Texas, Illinois, Montana, New Mexico, New York, and the province of Ontario, Canada, have reported that they use preload to improve damage repairs.

CHAPTER THREE

INTERPRETATION, APPRAISAL, APPLICATION

GENERAL COMMENTS

The findings of this research indicate that replacement and repair-in-place techniques have been developed and successfully constructed. Examples for repair of severe damage included in Chapter Two indicate that the capacity of a damaged girder can definitely be restored. Techniques for repair of severe damage shown by splices 1 through 5 in Chapter Two can be used without additional testing. Splices 6 through 9 require testing or special development, or both. These techniques (6 through 9) are not recommended for general use at this time. Use of these techniques could be considered on a provisional basis. Techniques shown by splices 10 and 11 have been used, but consideration should be given to improve their durability characteristics.

To further the state of the art, repair-in-place methods should be made known to other transportation departments. As indicated, some techniques in this report are recommended for use on a provisional basis. Repairs of damaged girders should be monitored on an established inspection basis. Where the desire exists to consider the use of repair-in-place techniques, development effort is required. This development effort should preferably be accomplished without the pressures from an immediate emergency. By studying plausible repair-in-place techniques, it seems probable that acceptable and rational criteria can be established.

GUIDELINES FOR DAMAGE ASSESSMENT

These guidelines are developed from the evaluation of present techniques and an objective/subjective analysis gained from actual working experience. Guidelines have not been included for established procedures that are commonly used in this type of work. Specifications and procedures for accomplishing work have not been repeated where information on these items is covered elsewhere in the report. Reference is made to Appendix A and Chapter Two for additional information. This report does not endorse products or manufacturers. Trade or manufacturers' names have been included only for guidance and possible contact by those who have not developed their own specifications for materials that might be used in repair techniques.

Best damage assessment will be accomplished by establishing standard procedures for inspection, reporting, engineering assessment, and the monitoring of completed repairs. The monitoring of repairs has been included in damage assessment to afford personnel responsible for inspection the opportunity to improve their damage inspection and assessment techniques. From information gained through this research, it is recommended that personnel responsible for damage assessment develop their specific procedures prior to the time when it is required to respond to a damage report. This will better ensure uniform treatment and more orderly progress. Establishment of procedures, without pressure from an emergency, should result in best practices. Coordination and input should occur between all personnel that will participate in the damage assessment process. All departments of transportation that participated in this research indicate the interest and expertise required to organize this area of the problem in a manner that will suit their particular needs.

Definition of Damage

In other sections of this report reference was made to minor damage, moderate damage, severe damage, and critical damage. The following definitions are guidelines, recommended for use in damage assessment. They should be used in establishing certain specific information to be included in the damage inspection report.

Minor Damage

Minor damage is damage only to concrete portions of PCB girders. This damage may consist of extensive spalled areas on the girder, but there shall be no exposed reinforcing bars or prestressing strands. Cracks emanating from spalled areas shall be less than 3 mils in width.

Inspection Procedures. Location and size of all spalled and unsound concrete areas shall be reported. Location, length, and width of all visible cracks shall be reported.

Assessment Procedures. In case of an extensive spalled area, stress calculations similar to Figure 10 (preload 1) would be beneficial.

Moderate Damage

Moderate damage is damage to concrete portions only of PCB girders. This damage may consist of extensive spalled areas on the girder, exposing reinforcing bars and/or prestressing strands. Cracks emanating from spalled areas may be wider than 3 mils, but they shall be closed below the surface damage. There shall be no severed prestressing strands.

Inspection Procedures. Location and size of all spalled and unsound concrete areas shall be reported. Location, length, and width of all visible cracks shall be reported. Exposed strand and reinforcing steel shall be thoroughly inspected, and all visible marks and/or distortion shall be reported.

Assessment Procedures. Stress calculations similar to Figure 10 (preload 1) shall be made. Should prestress strands be damaged, stress calculations similar to Figure 11 (preload 2) shall be made. The damage stresses shall be compared to the design stresses. Traffic restrictions specified at initial inspection shall be reviewed and appropriate revisions shall be determined.

Severe Damage

Severe damage is damage to concrete and reinforcing elements of PCB girders. This damage may consist of one or more of the following:

1. Cracks extending across the width of the bottom flange but closed below the surface damage (refer to "Fatigue" section in this chapter).
2. Major or total loss of concrete section in the bottom flange.
3. Major loss of concrete section in the web, but not occurring at the same location as loss of concrete section in the bottom flange.
4. Severed prestressing strands or strands that are visibly deformed.
5. Horizontal misalignment of the bottom flange in excess of the allowed standard tolerance (refer to App. A for more information), and vertical misalignment not exceeding the normal allowable. If horizontal misalignment of the bottom flange is within permissible limits, and the girder web is not cracked at the interface with the top flange, web misalignment can normally be considered within allowable limits.

Inspection Procedures. Location and size of all spalled and unsound concrete areas shall be reported. Location, length, and width of all visible cracks shall be reported. All damage to prestress strands and reinforcing steel shall be reported. Location of hold-down devices in the girder shall be shown in relation to the damage. Horizontal and vertical misalignment along the length of the girder, and at points of localized damage, shall be reported. (These measurements might best be made by string-lining.) Cracks shall be inspected below surface damage to determine that the cracked section has closed.

Assessment Procedures. Stress calculations for the damaged girder, similar to calculations given in Chapter Two, shall be made. On the basis of inspection data, the loss of prestressing force shall be calculated. The damage stresses shall be compared to the design stresses. Traffic restrictions shall be reevaluated. The use of longitudinal steel girders located above the damaged girder, or installation of other temporary falsework for safety and/or strength, should be considered.

Critical Damage

Critical damage is damage to concrete and reinforcing elements of PCB girders. This damage consists of one or more of the following:

1. Cracks extend across the bottom flange and/or in the web directly above the bottom flange damage that are not closed below the surface damage. (This indicates that the prestressing strands have exceeded yield strength.)
2. An abrupt lateral offset as measured along the bottom flange or lateral distortion of exposed prestressing strands. (This also indicates that the prestressing strands have exceeded yield strength.)
3. Loss of prestress force to the extent that calculations show that repairs cannot be made.
4. Vertical misalignment in excess of the normal allowable.
5. Longitudinal cracks at the interface of the web and the the top flange that are not substantially closed below the surface damage. (This indicates permanent deformation of stirrups.)

Inspection procedures and assessment procedures for critical damage should be the same as for severe damage. As stated elsewhere, critical damage requires replacement of the girder. For the foregoing items 3 and 4, stress calculations shall be made prior to making the replacement decision. Critical damage may require the installation of temporary falsework to safeguard the public and the facility. This action should be taken at the time of inspection.

General Damage Assessment and Inspection

Damage assessment and damage inspection are two distinct functions related to the damage of the PCB. The findings in this research indicate that in the case of severe and critical damage, inspection should normally be performed by the trained structural engineer who will be responsible for the damage assessment and plan preparation. Damage inspection reports to be used for damage assessment should always be the responsibility of personnel trained and experienced in this work. The following are general guidelines recommended for consideration for damage inspection and damage assessment. These guidelines do not include normal bridge inspection practices. They only pertain to this research project.

Damage Inspection

1. Damage inspection shall be performed by trained personnel. Severe and critical damage shall be performed by structural engineers.
2. The inspection of damage shall result in a report of factual damage information. Data shall include location and size of concrete damage; location, configuration,

length, width at surface, and width below surface damage, of all cracks; location and damage of all exposed reinforcing elements; horizontal and vertical misalignment; localized damage to prestressing elements.

3. Construction plans shall be used during the inspection process.

4. Specialized equipment, particularly equipment for determining crack widths, should be used.

5. Pictures shall be taken of the significant damage.

6. Inspection shall include all portions of the structure that may have been affected by the damage. Bearings, pier caps, adjacent girders, diaphragms, and roadway slab are some elements that could suffer damage away from the point of impact.

7. On the basis of the damage inspection, traffic restrictions shall be established.

8. The inspection shall include site location conditions that may affect possible alternative repair solutions.

Damage Inspection Reports

1. Develop a standard form for reporting. A standard girder drawing should be used to show damage location and damage type.

2. Space should be provided for the normal narrative report, which should be completed during the inspection.

3. The inspection damage report should not include recommended repair procedures. Factors that affect alternative solutions should be included.

4. The damage report shall include the date of reported damage and the date of inspection.

5. Law enforcement accident reports shall be made a part of the damage report.

6. A cross-referenced record system should be established to provide ready access to all PCB damages. This should also incorporate ready access to damage photographs

Damage Assessment

1. The damage assessment shall be made from the inspection report data; past damages shall be reviewed.

2. In all but minor damage, a structural analysis should be made. This analysis should determine stress levels in the damaged girder, and these stresses shall be compared to the design stresses.

3. Structural analysis shall be used to determine temporary support requirements.

4. Previously imposed traffic restrictions should be reviewed in relation to the calculated stresses.

GUIDELINES FOR SELECTION OF REPAIR METHOD

The purpose of these guidelines is to arrive at the best overall repair solution for any individual damage incident. The following factors should be considered in selecting a damage repair method. The first five factors—service load capacity, ultimate load capacity, overload capacity, fatigue life, and durability—are all related to structural integrity, and the degree of consideration will depend on the severity of damage. Severity of damage will also have an effect on the degree of consideration given to each of the additional factors; however, these factors are affected by other variables as presented.

Service Load Capacity

Calculations shall be made to show that repair of damaged girders have essentially the same service load capacity as the original girder. Minor differences could be accepted if justified (see section under "Overload Capacity").

Ultimate Load Capacity

Calculations shall be made to show that repair of damaged girders has essentially the same ultimate load capacity as the original girder. Minor differences could be accepted if justified (see section under "Overload Capacity").

Overload Capacity

The scope of this report is essentially limited to the repair of accidentally damaged prestressed concrete bridge members. The overload capability of the repaired members should not reduce the allowable overload capacity of the bridge. One illustration of overload capacity for a repaired-in-place girder is shown in Figure 15 and accompanying calculations.

It is not within the scope of this report to study the adequacy of present bridge design procedures to carry the extra-legal loads that are operating under permits. A discussion of this subject is given in Cassano and LeBeau (*1*).

Some agencies consider the location of a damaged member in assessing overload capability. If a member is located behind a barrier curb or under a sidewalk, it may not receive as much overload as an interior girder. This is a logical consideration. For those agencies with Structural Design Language (STRUDL) computer programs available, it is fairly simple to determine the load carried by an individual girder. No justification has been found to add additional overload capacity to the repaired girder above that of adjacent girders.

Two methods shown in this report could be used to strengthen existing spans or bridges. One is the metal sleeve splice, which could be fabricated in segments and joined together by butt welding. The other is the adding of additional prestress.

Overload Capacity Illustration

Permit loads are loads that exceed legal limits but are allowed to travel on the highway under a permit issued by an authorized agency. There is variation in load permit policies from state to state, and the details of these policies are not readily available. The state transportation department of California has published its permit policy (*1*) and the overload illustration (Fig. 15) uses this policy. California designs each new structure for both HS 20 loadings and a loading system that has axle weights approximately 1.5 times HS 20 loadings. The overload moments used in the illustration are based on California's loads and spacing of loads. The load distribution factors are assumed to be the same as AASHTO specifications. These factors may be conservative.

Overload Illustration

3 Severed strands in the bottom layer
Splice No. 4 being used

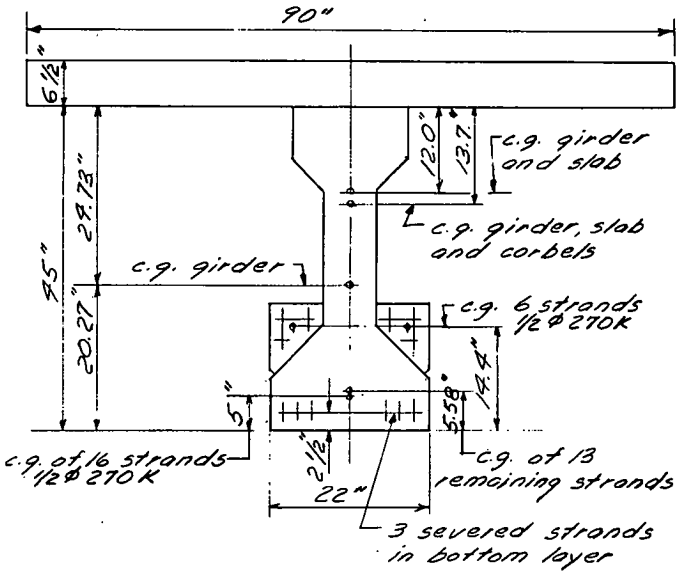

AASHTO GIRDER TYPE III

(1 inch = 25.4 mm.
1 foot = 0.305 m.)

Overload Illustration (Cont.)

f'c girder = 5000 psi. Ec slab assumed to be 0.8 × Ec girder.
For section properties and normal strand working loads see Splice No. 4 Chapter 2.

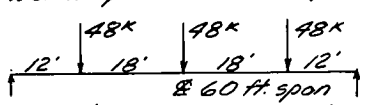

Distribution = 5/5.5 = 1.36
Impact = 27 %
M_{LL+I} = 1120 ki
(girder spacing = 7'-6")

Coltrans Overload

Calculate overload stress for the original girder:

DL girder = 583 lb/ft.
DL slab = 650 lb/ft.
Total DL = 1233 " " (Not including corbel wt.)
$M_{DL} = w\ell^2/8 = 555^{ki}$
ft bot DL = M/S = 555(12)/6190 = ----- ^{T}1076 psi.
M_{LL+I} = 697 ki (HS 20 Loading)
ft bot LL+I = 697(12)/9895 = ----- ^{T}845 psi
fc bot prestress = P/A + M/S
= 16 (22k/strand)/559 + 16(22)(15.27)/6190 = ^{C}1498 psi.
Total = ^{T}423 psi.
Assume allowable ft = $6\sqrt{f'c} = 6\sqrt{5000} = {}^{T}424$ psi.

ft bot. (Coltrans overload) = 1120(12)/9895
= ^{T}1358 psi.
ft bot. = ^{T}1076 + ^{T}1358 − ^{C}1498 = ^{T}936 psi
$x = 936/\sqrt{f'c} = 13.2$ (f'c = 5000 psi)
Allowable cracking stress per AASHTO Art. 1.6.6 = $7.5\sqrt{f'c}$
∴ The stress due to Coltrans overload exceeds the allowable cracking stress by (13.2 − 7.5)(100)/7.5 = 76 % for the girder as originally designed.

Figure 15. Overload illustration.

Overload Illustration (Cont.)

Calculate overload stress for the repaired girder:

1) Assume loss of concrete section to be negligible:
fc bot. prestress = P/A + M/S
= 13(22k per strand)/559 + 13(22)(14.7)/6190 = -- ^{C}1190 psi.
fc bot. added post-tensioning = P/A + M/S
= 6 (24.7k per strand)/1129 + 6(24.7)(16.9)/11550 = ^{C}350 psi.
ft DL = ----- ^{T}1076 psi.
ft wt. of corbels = 41.2 ki (12)/9895 ^{T}50 psi.
ft bot Coltrans overload = 1120(12)/11550 = ^{T}1160 psi.
Total = ^{T}746 psi.

$x = 746/\sqrt{f'c} = 10.6$
∴ The stress due to Coltrans overload exceeds the allowable cracking stress by (10.6 − 7.5)(100)/7.5 = 41 % for the repaired girder.

2) Assume 5 in. removal of shattered and loose concrete from the bottom flange. (See Chapter 2 – Preload No. 4). Assuming preloading is not used, the only prestress at the bottom of the girder in the damaged area will be that furnished by the 6 post-tensioned strands:

fc bot. added post-tensioning = -- -- ^{C}350 psi.
ft bot. Coltrans overload = ---------- ^{T}1160 psi.
Total = ^{T}810 psi

$x = 810/\sqrt{f'c} = 11.5$
∴ The stress due to Coltrans overload exceeds the allowable cracking stress by (11.5 − 7.5)(100)/7.5 = 53 % for the repaired girder, at the point of damage.

Overload Illustration (Cont.)

f'c roadway slab = 4,000 psi.
Ultimate strength capacity of original girder:
$p^* = A_s^*/bd = 16(0.153)/90(46.5) = 0.000585$
$f^*_{su} = f's(1 - 0.5(p^*(f's)/f'c))$
= 270(1.0 − 0.5(0.000585)(270)/4.0)) = 265 ksi.

$M_u = A_s^* f^*_{su}\, d(1 - 0.6(p^*)(f^*_{su})/f'c)$
ϕ Assumed to be 1.0
M_u = 2.45(265)(46.5)(1.0 − 0.6(0.000585)(265)/4.0)/12
= 2460 kip ft.

Ultimate strength capacity of repaired girder:
$p^* = A_s^*/bd = 19(0.153)/90(43.2) = 0.000747$
f^*_{su} = 270(1.0 − 0.5(0.000747)(270)/4.0)) = 263 ksi.

M_u = 2.91(263)(43.2)(1 − 0.6(0.000747)(263)/4.0)/12
= 2670 kip ft.

∴ The ultimate strength of the repaired girder is greater than the ultimate strength of the original girder.

Ultimate strength capacity required by 1977 AASHTO Art. 1.6.5 - Load Factors:
$M_u = 1.3(DL + 5/3\, LL + I)$
$M_u = 1.3(555 + 41.2 + 5/3(697)) = 2285^{ki}$

∴ The ultimate strength of the original girder (2460 ki) and the ultimate strength of the repaired section (2670 ki) both exceed the ultimate strength required by AASHTO Art. 1.6.5

Overload Illustration (Cont.)

However the AASHTO Manual for Maintenance Inspection of Bridges 1978 also allows rating of bridges with a load factor method. The maximum allowable Operating Moment = 1.3(M_{DL} + M_{LL+I}) = 1.3 (555+41.2+697) = 1680 kip ft. (Assume ϕ = 1.0 for prestressed girders)

The maximum moment using Caltrans overload = 555+41.2+1120 = 1716 kip ft. ∴ The Caltrans Overload moment exceeds the allowable Operating Rating moment by (1716-1680)(100)/1680 = 2%.

The Manual for Maintenance Inspection also gives maximum allowable stresses for Operating Ratings. Art. 5.4.6a (Prestressed Concrete) states that the Operating Rating shall result in moments not to exceed 75% of the ultimate moment capacity of the member. In situations with wide vertical dispersion of the tendons the stresses shall not exceed 0.90 of the yield point stress in the prestressing steel in the layer of tendons nearest the extreme tension fiber of the member.

75% of the ultimate strength of the original girder = 0.75(2460) = 1845 ki. The maximum moment using Caltrans overload = 1716 ki which would be acceptable.

The repaired girder does have vertical dispersion of strands and the approximate capacity is calculated as follows:

Overload Illustration (Cont.)

The allowable steel stress in the bottom layer = 0.9 yield point = 0.9(0.85)(270) = 207 ksi.

Determine if section is cracked:

The normal working stress in the strands after losses ≅ [0.7(270,000)-45,000] = 144 ksi. The change in strand stress ≅ 207 ksi - 144 ksi = 63 ksi. n for f'c = 5000 = 6.1 ∴ the change in concrete stress = 63/n = 63/6.1 = 10,300 psi. The concrete cannot resist this change in stress and will crack.

The allowable steel stress is below the yield point. Therefore the strain due to the increase in tensile stress in the steel and the resulting compressive stress in the concrete will remain a plane. The working stresses in the strands will be added to the increases in tensile stress in the strands. Assume the bottom layer of strands to be 2½ in. above the bottom of the girder. d = 51½ - 2½ = 49.0 in.

For f'c slab = 4000 psi, $E_c = 33\, w^{3/2}\sqrt{f'c}$
w = 150 lb/ft.
Ec = 3,834,000 psi.
Es = 28,000,000 psi.
n = Es/Ec = 7.3
fs/n = 63,000/7.3 = 8630 psi.

Overload Illustration (Cont.)

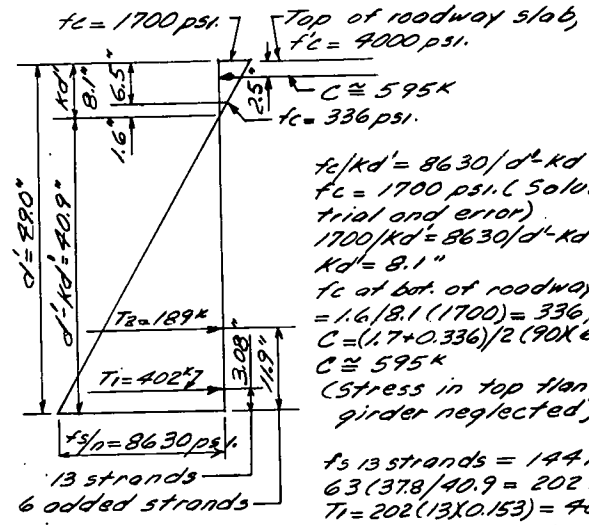

fc/kd' = 8630/d'-kd'
fc = 1700 psi. (Solution by trial and error)
1700/kd' = 8630/d'-kd'
kd' = 8.1"
fc at bot. of roadway slab = 1.6/8.1 (1700) = 336 psi.
C = (1.7+0.336)/2 (90)(6.5)
C ≅ 595K
(Stress in top flange of girder neglected).

fs 13 strands = 144 ksi + 63(37.8/40.9 = 202 ksi.
T1 = 202(13)(0.153) = 402K

Working stress of 6 post-tensioned strands = 0.6 f's = 0.6 (270) = 162 ksi
fs 6 strands = 162 + 63(29.0)/40.9 = 206 ksi.
T2 = 206 (6)(0.153) = 189K
T1 + T2 = 402 + 189 = 591K ≅ 595K
M = 402(43.4)/12 + 189(34.6)/12 = 2000 ki

The maximum moment using Caltrans overload = 1716 ki which would be acceptable.

For an approximate change in steel stress of 63,000 psi, Δ/l = f/Es = 63,000/28,000,000 = 0.00225 in./in. Assuming cracks spaced at 6 in., length of crack ≅ 6 (0.00225) ≅ 0.0135 in.

Summary

With the exceptions discussed earlier in this section, the repair of damaged girders shall have the same overload capacity as the original girder. This criterion does not appear to pose a problem. It appears that, in general, if repaired girders have service load capacity and ultimate load capacity equal to or greater than the original girder, the overload capacity will also be equal to or greater than the original girder.

The preceding illustration shows that the Caltrans overload gave very high tensile stresses in the girder. These stresses were high enough to cause cracking. This illustration does cast doubt on the ability of prestressed bridges designed in accordance with 1977 AASHTO Specifications to handle permit overloads without cracking. It is suggested that all design agencies review Caltrans' article (*1*). It is acknowledged that full-scale load tests of prestressed bridges normally show higher load-carrying capacities than calculations based on specifications.

Fatigue

In *AASHTO Standard Specifications—1977* article 1.6.17 states that the anchorages of unbonded tendons and the anchored tendon shall withstand a dynamic test as follows.

A representative specimen and tendon shall withstand, without failure, 500,000 cycles from 60 percent to 66 percent of its minimum specified ultimate strength, and also 50 cycles from 40 percent to 80 percent of its minimum specified ultimate strength. The period of each cycle involves the change from the lower stress level to the upper stress level and back to the lower. The specimen used for the second dynamic test need not be the same used for the first dynamic test.

Dynamic tests are not required on bonded tendons unless the anchorage is located or used in such manner that repeated load applications can be expected on the anchorage.

No other fatigue life criteria for prestressed concrete design are presented in *AASHTO Standard Specifications—1977*. It is believed that there is ample literature readily available that indicates that prestressed concrete beams do not fail because of concrete fatigue. Allowable current working stresses give adequate protection against concrete fatigue.

Existing tests show that prestressing strands in cracked prestressed concrete girders exhibit a lower fatigue life than fatigue tests on bare strands. When the fatigue loading on a prestressed girder is of sufficient magnitude to cause a flexural crack, stress concentrations are imposed on the prestressing elements. These stress concentrations give higher stress ranges for ensuing loads of the same magnitude and, therefore, a lower fatigue life. It is possible that girders subjected to accidental damage and cracking may exhibit an even lower fatigue life. Therefore, the fatigue life of damaged prestressed concrete bridge girders repaired in place deserves a review of previous fatigue tests.

Fatigue Life of Bare Strands

Fatigue tests of prestressing strands show that if strands are subjected to a maximum stress range of 0.10 times the ultimate strength, the strand has a fatigue life of approximately 2,000,000 cycles (*2*). For 250 K strands, this stress range would be 25 ksi, and 27 ksi for 270 K strands.

It is believed that nearly all grade separation structures would fall in this category. Example 1 shows that the live load plus impact stress for a 57.33-ft (17.5 m) span is 1.199 ksi. The 28-day concrete strength was 6.0 ksi. Using $Ec = 33\ w^{3/2}\sqrt{f'c}$, with $w = 150$ lb per cu ft, $Ec = 4{,}700{,}000$ psi. Using $Es = 28{,}000{,}000$ psi, $n = 28{,}000{,}000/4{,}600{,}000 = 6.0$. The stress range is only $6.0\ (1.199) = 7.2$ ksi.

It is apparent that the fatigue life of bare prestressing strand is entirely adequate.

Fatigue Life of Prestressed Concrete Beams

The fatigue life of prestressing elements in girders that are not subjected to cracking loads will be the same as bare strands subjected to the same stresses.

There are no known fatigue tests of beams that suffered concrete fractures due to overheight vehicle impacts. There have been fatigue tests of girders that have been cracked by test loads.

Rabbat et al. (*3, 4*) performed a series of tests primarily to determine the effect of repetitive loading on the behavior and strength of girders with draped and blanketed strands. "Crack formers" were placed at certain meaningful points. Cracks did occur at these points under service load tensile stresses equal to $6\sqrt{f'c}$. The minimum fatigue life for loadings that produced a stress equivalent to $6\sqrt{f'c}$ was about 3 million cycles. The minimum fatigue life for loads that gave zero tension in the concrete was 5,000,000 cycles.

Girder fatigue test series performed by Abeles and Barton (*5*) required static loading to be applied until the

---

Example 1

A breakdown of stresses at the centerline of the span is given at the end of Example 1.

SBDG - Stress at bottom of the girder due to dead load of the girder only, on the girder section (K/in.^{2})

SBDS - Stress at bottom of the girder due to dead load of the slab only, acting on the girder section (K/in.^{2})

SBDC - Stress at bottom of the girder due to dead load of the curb and any weight of asphalt overlay acting on the composite section (Using Long Term SLAB E) (K/in.^{2})

SBXML - Stress at bottom of the girder due to live load plus impact only, acting on the composite section (K/in.^{2})

SBPRE - Stress at bottom of the girder due to prestress only, acting on the girder section (K/in.^{2}), after all losses.

```
IDENT NUMBER 1 DESIGN PROBLEM
PROBLEM 2, 6 HARPED STRANDS, 12 STRAIGHT STRANDS
HARPED STRANDS RAISED
SPAN 57.33, SERIES 6, 6. GIRDER AT 6.92, 7.00 SLAB
WEB INCR 0.0, 0.0 IN ASPH. OVERLAY
STRANDS 0.153, 270 K, A = 2.75
0.9 FT CURB S/ 5.5, AVFY = 16.00
    FINAL DESIGN STRESS, BOT. CENTERLINE - 0.011 (ALLOWED 0.0)
    FINAL DESIGN STRESS, TOP CENTERLINE  - 1.563 (ALLOWED -2.400)
    FINAL DESIGN STRESS, TOP AT D/2      - 0.132 (ALLOWED  0.232)
    STRESS TOP AT HARP PT. AT RELEASE      0.193 (ALLOWED  0.212)
    STRESS BOT. AT HARP PT. AT RELEASE   - 2.714 (ALLOWED -3.000)
    STRESS TOP AT D/2 AT RELEASE         - 0.064 (ALLOWED  0.212)
    STRESS BOT. AT D/2 AT RELEASE        - 1.496 (ALLOWED -3.000)
(INCLUDES E. SHORTNING AND RELAXATION)
GIR. CONCRETE STRENGTH AT STRAND RELEASE = 5.000, AT 28 DAYS = 6.000
WS = 0.719, WC = 0.139, E = 2.330, FCL = 10.000
RISE IN HARPED STRANDS 28.250, FO = 3.750
COMPOSITE SECTION I = 205842., Y BOT = 33.81
FLG W = 83.04, Q SLAB = 5043.
ULTIMATE MOMENT REQD 2300. AVAILABLE 2554.
ULTIMATE V AT END OF END BLOCK 148.8, V/BD = 0.682 (ALLOWED 0.731)
STIRRUP SPACING AT END OF END BLOCK = 14.39
ULTIMATE V AT CENTERLINE 49.7, STIRRUP SPACING = 116.12
GIR. D.L. END REACTION = 39.7, WITHOUT CURB OR ASPH = 35.6
BREAKDOWN OF STRESSES AT CENTERLINE SPAN
SBDG = 0.496; SBDS = 0.993; SBDC = 0.128; SBXML = 1.199, Live load
    plus impact stress in ksi; SBPRE = -2.827
```

prestressing steel began to yield slightly. At this point, the load was removed and complete failure was avoided. Almost complete recovery was obtained with only slight or no visible damage in the compressive zone. The details of this test are too lengthy to describe here; however, the range and upper limits used indicate that girder strands can be stressed to the yield point, the load released and subsequently withstand a large number of fatigue loading cycles.

In another fatigue test series of prestressed girders Warner and Hulsbos (*6*) concluded that girder loadings causing flexural cracks to open should not shorten girder fatigue life provided the stresses induced in the strand reinforcement are smaller than the fatigue limit. A following test series (*7*) of prestressed concrete girders appears to verify the foregoing conclusion. This test series also gives an example solution of fatigue life for an under-reinforced prestressed concrete girder.

Hanson et al. (*8*) carried out a fatigue test to obtain test information on the fatigue life of prestressed concrete I-beams that had been overloaded to cause flexural and inclined cracking prior to repeated loading. Details and complete results are too lengthy to describe here. However, each beam was subjected to an initial static loading of approximately 80 percent of the ultimate flexural capacity of the beam. This load was sufficient to cause significant inclined cracking in both shear spans. The beams were next subjected to repeated load cycles ranging from 19 percent to 45 percent of the ultimate flexural capacity of the specimen. Each beam sustained 2,000,000 cycles of this design loading. The equivalent tensile stress in the concrete was $6\sqrt{f'c}$. The maximum flexural crack widths during this loading were less than 0.010 in. The cyclic loading was then stopped. Subsequent cyclic loadings were applied at 48 percent to 54 percent of the ultimate flexural capacity. These above design loadings caused flexural fatigue failures at 458,000 to 1,201,000 cycles.

Summary

The damage caused by an overheight vehicle impacting a prestressed girder is complex to analyze. The effect on the fatigue life of the remaining strands, assuming that one or more strands have been broken, may defy the use of a highly theoretical analysis.

The failure of a strand because of impact by a dynamic load which also shatters surrounding concrete may be primarily a shear failure or a combination of shear and flexure. Some strands may not have failed, but a visual inspection after removing loose concrete may show permanent deformation. These strands should be deleted in computing girder strength. Individual wires showing abrasion or damage should also be deleted. It is reasonable that adjacent strands may not have been stressed beyond the yield point. One practical way of telling whether the strands have been stressed beyond the yield point is the following.

After loose concrete has been removed, a careful visual inspection should be made to determine whether other cracks in the compression flange have "closed." (Closure means a hairline crack.) If these cracks have closed, it is reasonable to assume that the remaining strands have not been stressed beyond the yield point. Although the research data available at this time are not entirely conclusive, present data indicate that these strands will have a fatigue life equal to that of the original girder provided the following limitations are met:

1. Repair procedures as outlined in this report are followed.
2. If the original girder was designed for tension under working load stresses, the repair shall be designed to at least withstand these same tensile stresses with the same factor of safety.
3. The maximum tensile stress in the concrete under working loads shall not exceed $6\sqrt{f'c}$. (AASHTO Art. 1.6.6(B)). See splice 3 in Chapter Two for a possible exception.
4. The maximum allowable prestressing steel stress due to LL + I shall be 10 ksi for 7-wire prestressing strands, grades 240 K to 270 K.
5. The maximum tensile stress in the prestressing elements under working loads (after losses) shall not exceed 0.6 f's.

No recommendation is made regarding the fatigue life of accidentally cracked girders that were prestressed with high-strength bars or rods. This is because there is insufficient fatigue test data of girders stressed with high-strength rods or bars. It can be concluded that damage that does not cause cracking completely through the precompressed area containing high-strength rods should not reduce the original fatigue life.

The foregoing criteria for strands are expected to give a minimum fatigue life of approximately 3,000,000 cycles. The criteria are not conservative considering the fact that no fatigue tests have been made on girders accidentally damaged by vehicle impacts. The criteria are practical for the most commonly encountered situations within the scope of this study. The criteria are not intended to cover extremely short-span girders or short-span slabs that have live load plus impact stresses that exceed 10 ksi.

Durability

A major concern expressed by bridge engineers relates to the durability of repairs to damaged girders. Various state-of-the-art techniques used to improve durability are given in Appendix A. Evaluation of these techniques is made in Chapter Two, with references to good specific specifications for patching and epoxy injection to repair damage. It has been recognized throughout this research that durability of repairs should be, as nearly as possible, equal to the durability of the original construction. The durability of structure components, such as roadway slab construction joints, appears to be accepted by bridge engineers in replacement projects. The durability of repair-in-place projects appears to be less widely accepted.

Present practice substantiates the fact that epoxy mortars and special concrete mixes are available that more than meet strength requirements of original material. It is recognized that a crack that has been caused by normal load cannot be structurally repaired by epoxy injection. Although the epoxy may not fail, a new crack will occur in the adjacent concrete if the member is subjected to the

same load that caused the original crack. However, cracks in girders from collision are not caused by normal load stresses. Therefore, by applying preload prior to epoxy injection, and restoring prestress force, structural capacity can be restored which should restore durability. A study made by the Kansas Department of Transportation (*14*) shows effective use of epoxy to structurally repair stress cracks in normally reinforced concrete girders. Another study by the State Highway Commission of Kansas (*15*) contains valuable information relative to physical properties of epoxies related to epoxy injection.

The following guidelines should be considered in repairing damaged PCB girders to achieve acceptable durability:

1. All unsound concrete shall be removed and surface preparation shall be such that new material placed will be compatible with existing material. New material shall have equal or better strength characteristics than original.
2. Epoxy bonding, epoxy grout, and epoxy injection materials and systems shall be fully tested and approved, and shall be applied by trained personnel. Particular requirements concerning ambient temperatures must be observed.
3. Additional reinforcement to bond new material to existing surfaces should be considered.
4. Preloading should be used (if necessary) to ensure that the repair section will not be subject to greater tensile stress under live load than the original section.
5. Additional prestress force as required to ensure repaired stress levels are no greater than original design stress levels.
6. To further ensure durability, the repaired areas should be sealed with a proven water retardant.
7. Where repair design dictates, commitment shall be made to perform periodic preventative maintenance.

User Inconvenience and Speed of Repairs

Because user inconvenience and speed of repairs are so interrelated, they are considered as one in this report. The following are general guidelines that should be considered to address these items:

1. Safety to the users and the structure shall have primary importance. The decisions as to usability of the damaged structure, or portions thereof, shall be conservative.
2. Depending on the actions required by the damage, the best traffic control system shall be established. To reduce user inconvenience, the establishment of the best detour route should be carefully considered.
3. Recognizing that the initial decision probably was made on only inspection of the damage, the engineering assessment should be made immediately. Should the engineering assessment determine that initial traffic restrictions were too severe, they should be revised to reduce user inconvenience.
4. Proceduers to obtain emergency replacement girders and/or specialized equipment and materials should be established. The work that can effectively be accomplished by state forces should be known by all personnel that may be involved in accomplishing the repair.
5. The acceptability of various repair-in-place techniques should be established prior to an accident. Should any of the repair techniques outlined in this report appear advantageous, it is recommended that they be studied at an early date.
6. Replacement methods should also be studied prior to accidents to facilitate fast action.
7. Personnel responsible for repair designs should be trained prior to having to work under emergency pressures.
8. The required speed of repairs may dictate replacement or repair-in-place techniques and each agency's ability to respond to a particular situation may dictate the final decision. Climatic conditions also may very well influence decisions affecting user inconvenience and speed of repairs.
9. In general, repair-in-place techniques will result in less inconvenience to users. Because of less removal work, repair-in-place techniques should also result in faster repairs.

Cost

The repair cost of minor and moderate damage is relatively low. The repair can normally be accomplished by agency personnel. The cost of materials is relatively low. Most agencies have the necessary equipment needed to make these repairs. Some traffic control will be required. The estimate based on information and knowledge gained during this project is that the repair cost of minor and/or moderate damage (per girder) will not exceed 10 percent of the cost of replacing one girder.

The repair of severe damage will probably require the services of a contractor. The need for a contractor might depend on the type of repair (or splice) used. Splice 1 (the adding of reinforcing steel), splice 3 (the metal sleeve splice), and splices 6 through 8 (adding internal prestress) could all be accomplished by agency personnel. Most agencies do not have the equipment to add external prestress, although this equipment has been rented to make repairs.

If the agency elects to have the repair made by contract, consideration should be given to include alternate methods in the plans and special provisions. A number of the methods have not been used previously, and firm cost data are simply not available. Traffic control normally would be more extensive and costly for repairing severe damage than for repairing minor and moderate damage.

The severity of damage included under severe damage is quite broad. The number of severed strands may vary from one to as many as ten or more. The loss of concrete may vary from a small portion of concrete to most of the bottom flange. If more than one girder per span is damaged, the cost per girder will normally be less; however, increased traffic control may offset part or all of the savings.

Because of the foregoing variables, it is not possible to give precise cost data for the repair of severe damage. Table 2 gives estimated cost ranking of the repair methods shown in Chapter Two for repair of severe damage. This ranking is subjective.

On the basis of information and knowledge gained during this project, it is estimated that the repair cost of severe damage (per girder) will vary from 15 percent to 50 percent of the cost of replacing one girder, depending primarily on the extent of damage.

The repair of critical damage will require replacement of the damaged girder. Information received from a number of agencies (see App. A) indicates that the cost of replacing a girder may vary from $20,000 to $100,000. The average cost was nearly $50,000. The wide variation in cost is not considered unusual. There are a number of items that affect cost, the major items being:

1. Length and size of girder.
2. Amount of roadway slab removal.
3. Removal of curb or sidewalk.
4. Simple or continuous span.
5. The necessity for temporary supports.
6. Working access and traffic closure hours.
7. Traffic control.
8. Climate (winter undesirable—most agencies).

It is recommended that a cost estimate be made for the repair of each damage incident. Cost should be a major consideration in selection of repair method.

Esthetics

The emphasis placed on bridge esthetics may vary between agencies, and it is acknowledged that opinions may differ as to what is poor, acceptable, or good bridge esthetics. However, general esthetic guidelines are helpful in determining the esthetic acceptability of damage repairs.

Accidental damage that occurs during manufacture is normally completely restored architecturally, and these beams should be acceptable for their original intended use.

Certain accidental damage to girders in completed bridges is so severe that girder replacement is necessary. The type of girder replacements that are normally used give esthetic results that are equal to the original bridge.

Most accidental bridge damages can be repaired in place. These repairs should be judged on the esthetic acceptability of bridge details. The overall form or appearance is normally more important than minor bridge details. If bridges are viewed by pedestrians passing under the bridge, the esthetics of details become more important. Pedestrians will have the visual time and ability to notice details.

All of the methods of restoring strength illustrated in this report are considered esthetically acceptable details with the following possible exception.

Jacking corbels connected with posttensioned rods may be viewed as being an undesirable esthetic detail by pedestrians passing beneath the bridge. The motorist view of this detail would be of limited and short duration and, therefore, esthetically acceptable. Rejection of this detail for esthetic reasons should be considered when it will be seen in a near view by numerous pedestrians.

Range of Applicability

Range of applicability in this report means the ability to use the proposed repair for similar types of damage.

Minor Damage Repairs

The range of applicability for the minor damage repair methods given in this chapter is very high and can be used for many similar types of damage.

TABLE 2

REPAIR OF SEVERE DAMAGE

Cost Ranking - (1) is lowest cost

Repair Method	Rank	Comments
Splice No. 6 (replacing internal prestress)	1	Limited in capacity (Should be tested)
Splice No. 7 (replacing internal prestress)	2	May be limited in applicability (Requires special parts)
Splice No. 1 (adding external reinforcing)	3	Restores strength of one severed strand
Splice No. 3 (metal sleeve splice)	4	May be used for repair of all types of severe damage
Splice No. 8 (replacing internal prestress)	5	May be limited in applicability (Requires special parts)
Splice No. 2 (adding external prestress)	6	Restores strength of four severed strands
Splice No. 4 (adding external prestress)	6	Restores strength of three severed strands
Splice No. 11 (adding external prestress)	7	Assuming modifications made to increase durability
Splice No. 10 (adding external prestress)	8	Maintenance may be difficult. Applicability may be low.
Splice No. 5 (adding external prestress)	8	Restores strength of six severed strands
Splice No. 9 (replacing internal prestress)	--	Not enough information to rank

Moderate Damage Repairs

The range of applicability for the moderate damage repair methods given in this chapter is very high and can be used for many similar types of damage.

Severe Damage Repairs

All of the repair methods shown (here and in Chapter Two) have a wide range of applicability with the possible exception of splices 6 through 9 and splice 10. Splices 6 through 9 have excellent potential because they are all internal splices (spliced within the girder). Their esthetic rating would equal that of the original girder. They are believed to be economical, and speed of repairs would be excellent. They do require working access to the severed strands. If the severed strand or strands are surrounded by nonbroken strands, it might be physically impossible to use splices 6 through 9. It should also be noted that splice 6 does not restore full strength, and its use would be limited to those cases where restoration of full strength is not required.

Critical Damage Repairs

The usual method of girder replacement (removing slab and beam from above the bridge) (see App. A) has a wide range of applicability.

The choice to remove a girder from beneath the bridge might depend on the height of existing bearings. This technique may depend on temporary removal of the bearings to allow the damaged girder to be removed and the new girder placed.

The precasting of elements in addition to the girder might present a hauling weight problem.

Summary

Range of applicability should be considered in selection of a repair method. Some repair methods have a wider range of applicability than others. The ability of agency personnel to perform repair work varies. It may be plausible to train agency personnel to accomplish certain repair methods. Costs could be reduced by repeated use of a particular repair method.

Repair of Minor Damage

These girders may be repaired by the use of epoxy grout or shotcrete. The repair is largely cosmetic, but it nearly restores the same protection from corrosion that the original girder had. A record of the location of these repairs should be kept and they should be inspected on a periodic basis.

For present practices, refer to "Repair-in-Place Plans" in Appendix A. For evaluation and other guidelines, refer to "Repair-in-Place Plans" in Chapter Two and to "Durability" in this chapter.

Repair of Moderate Damage

Use of preloading should be strongly considered in the repair of moderate damage. Preloading would be applied prior to repair. Preloading will result in compression under dead load in precompressed zones and will increase the durability of the repair. All girder properties will be essentially restored to their original condition.

Cracks of 3 mils or greater should be pressure injected with epoxy resin. Smaller cracks should be "V'eed" and patched with epoxy grout for protection against corrosion. Spalls should be patched with epoxy grout. Concrete repair areas (including the interface between the new patch and the existing concrete) shall be capable of withstanding the same tensile stresses that the original girder was designed for. After repairs have gained sufficient strength, the preloading shall be removed.

For present practices, refer to "Repair-in-Place Plans" in Appendix A. For evaluation and other guidelines, refer to "Repair-in-Place Plans" in Chapter Two and to "Durability" in this chapter.

Repair of Severe and Critical Damage

Refer to Chapter Two, "Repair of Severe Damage," for plausible techniques and guidelines. Critical damage has been defined as damage that will require replacement. (See Chapter Two, "Replacement Plans," and App. A.)

Several transportation departments reported more than one damage to the same structure. Consideration should be given to elimination of damage by increasing vertical clearance at critical structures. As reported elsewhere in this report, Iowa has instituted a plan to raise structures that have vertical clearance of less than 14 ft. Raising a structure is costly work, and it could be preferable to lower the highway carrying traffic under the structure. Overlays should not be allowed under bridges which might cause less than desirable vertical clearance. Increasing vertical clearance certainly could prove cost-effective.

Fire Damage

The findings of this research indicate that fire damage to PCB is a small percentage of the total reported accidental damages. The inspection, assessment, and repair of fire damage present many difficult and complex problems. It is often difficult, if not impossible, to determine the length of time and the heat intensity various portions of a structure experience during a fire. Damage from most fires will involve large areas of the structure, and severity of damage varies considerably over these areas.

This report provides fire-related references that should be of assistance to transportation departments that experience fire damages. Information from these references includes criteria that are meaningful for rational assessment of damage and suggests procedures for subsequent repair.

Fire Resistance

The determination of fire resistance of structures must be established for rational assessment of fire damage. Until recently, fire resistance has been evaluated from experience in actual fires or determined from standard fire tests. Both methods rely on the relevancy and accuracy of observation and judgment (*9*). A publication titled "Fire Resistance of Prestressed Concrete Beams" (*10*) contains much information on fire resistance. A publication in the *PCI Journal* (*11*) addresses the design of prestressed concrete for fire resistance. The *Post-Tensioning Manual* (*12*) also contains pertinent information.

Damage Assessment

As with assessment for all types of damages, a thorough and accurate factual inspection and report are required. From inspection data related to fire resistance structural analysis should be used in the assessment process. The *Concrete Society Technical Report No. 15* (*13*) addresses assessment of fire damage and repair.

Damage Repair

General procedures for repair of fire damage appear to be basically the same as repair of other types of concrete damage. All unsound concrete should be removed prior to placement of new material. Specifying a minimum thickness for new material of 1 in. minimum seems desirable. Bonding agents, additional reinforcing elements, and epoxy injection should be considered to restore damaged areas and to achieve durable characteristics. From a structural standpoint, it is recommended that preloading be investigated to achieve stress levels under live load no greater than with the original design.

CHAPTER FOUR

CONCLUSIONS AND SUGGESTED RESEARCH

CONCLUSIONS

The conclusions in this chapter are based on review and evaluation of the information and data obtained during this study, and on the results of theoretical analysis of plausible repair techniques. The major cause of accidental damage to prestressed concrete bridge members is impact by overheight vehicles. The average number of impact damages was found to be 162 per year, while fire damages were 5 per year, and "other" damages were 34 per year. It is recognized that many minor damages may not be reported. Therefore, the number of accidents and the incidence of accidents reported in this study represent those damages perceived by transportation departments requiring a positive response. The average incidence of damage to PCB was found to be 0.86 percent.

Vehicle impact damage to prestressed I-beams, T-beams, bulb tees, and multi-web tees is much more prevalent than damage to prestressed concrete box girders. No reports were received of vehicle impact damage that warranted replacement or repair of PCB box girders. Possible reasons for this are: box girder structures are not generally used for many of the short-span grade separations; where cast-in-place box girder structures are built over a highway carrying traffic, falsework requirements may result in greater vertical clearance; and the inherent stiffness of the box girder structure is more capable of withstanding impact damage without loss of structural capability.

The repair of accidentally damaged PCB has been found not to be consistently appropriate for the reported damage. Some present repair-in-place techniques do not restore members to their original condition. Some girders have been replaced where a more appropriate repair-in-place technique could have been used. Methods for assessment of damage and selection of repair methods vary widely. The lack of published information available for guidance appears to be a primary factor. Organization also appears to be of prime importance. Those transportation departments that place responsibility for inspection, assessment, and repair of damage in one division are more generally consistent in determining appropriate decisions.

One factor that appears to lead to less appropriate repair practices is the assessment of damage during the damage inspection phase. Inspection should be limited to the factual collection and readily understood presentation of all pertinent damage information. Recommendations made at the inspection stage should be limited to factors that affect alternate methods of repair. The assessment of damage and selection of repair method should be made in an office atmosphere. It is recognized that temporary traffic restriction decisions may have to be made during the inspection phase.

Repair procedures followed during manufacture are not always consistent with repairs made after PCB completion. When different agency divisions are responsible for repairs during and after manufacture, close coordination between divisions is necessary. Agencies that have a good record-keeping system for damage inspection, assessment, and repair are generally more consistent in arriving at appropriate damage repairs.

Agencies should place a higher priority on publishing effective repair techniques that they have developed. This report is one step toward filling the void of published information available for guidance.

With respect to the use of the repair of severe damage techniques, splices 1 through 5 may be used without further research. Splice 4 has been used and is performing in a satisfactory manner. Splices 3 and 5 are included in recommendations for further research. However, because of the characteristics of this technique, it should be possible to establish adequately conservative design criteria to ensure safe performance. Should this metal sleeve installation be used, adequate monitoring procedures should be established and followed. This technique appears to have some unique qualities that enhance its applicability.

Splices 6 through 8 require further testing and/or development. Should they be used on a trial and assessment basis, adequate controls must be established.

Splices 10 and 11 have been used and are methods that do restore prestress force. These splices may be used; however, it is believed that modifications as recommended should be incorporated to enhance durability characteristics.

SUGGESTED RESEARCH

Repair of Severe Damage Tests

This report presents several promising techniques of repair that have not been tested. One technique recommended for testing is the use of a metal sleeve splice bonded to the girder with epoxy (splices 3 and 5). The primary purpose of this test is to substantiate satisfactory interaction between the splice and girder and to substantiate minimum bond length requirements. The testing should be accomplished in a laboratory. The epoxy grouting should be performed under conditions similar to actual construction conditions.

A second technique to test is the splicing of single strands with a high-strength steel rod (splice 7). Stress in the strand is induced by torqueing two short lengths of rod together in a splice sleeve. The strands and rods are connected with modified strand couplers. The feasibility of modifying the couplers needs to be established. The practicality of torqueing and measuring stress should be determined. This test should be performed in a laboratory.

Consideration should be given to testing splice 2. This splice adds external prestress to a damaged girder by means of posttensioning two 1-in. round high-strength rods. The

rods are anchored to 4-ft-long jacking corbels that are cast to the girder. One purpose of testing would be to measure the effectiveness of the splice at loads higher than design loads. The strength of the jacking corbels would also be tested.

Testing should be performed on splice 6. This splice uses heat to induce stress in broken strands. The actual amount of stress induced needs to be verified. This splice has been used on one or more occasions.

Splice 8 splices pairs of strands. This technique requires further development of the required coupler units and feasibility needs to be established. Upon establishment of feasibility, it is recommended that this splice be laboratory tested.

The most cost-effective way of making the preceding tests is to make as many tests as possible on one girder. Blockouts during casting would be provided for the internal strand tests. Conditions that closely simulate real damage should be provided. The splice tests could be located at different locations along the girder.

At least one test should be made to demonstrate the advantages of preloading.

Static load testing is recommended for these tests.

Fatigue Test

Consideration should be given to making a fatigue test of a girder that has been subjected to severe damage by vehicle impact. Severe damage would include at least one crack passing through the precompressed area containing prestressed strands. The crack would be closed to hairline width. The girder would be repaired according to guidelines given in this report.

The purpose of this test would be to substantiate guidelines given in this report for expected fatigue life of severely damaged prestressed girders. Fatigue tests of girders that have been cracked by testing have been made. There are no known fatigue tests of girders damaged by vehicle impact.

Testing of Equipment

In pursuing further research to determine best techniques for the repair of damaged PCB members, it is recommended that tests of existing equipment for assessment of damage and repair be included. This equipment should include pachometers, oscilloscopes, Kuhlman Bar, Micro-Mike, strain gages, and crack-measuring and recording devices, among others. This research should be developed with the idea of not only measuring the effectiveness of specific repair techniques but also of improving the art of damage assessment.

For most practical results possible through further research and testing, it is recommended that consideration be given to a firm that is involved in the manufacture of PCB girders. Some manufacturers may have accomplished considerable research related to PCB members. The complications inherent to all repair engineering work indicate obvious advantages that should accrue from research by an organization intimately familiar with the subject.

REFERENCES

1. Cassano, R. C., and LeBeau, R. J., "Correlating Bridge Design Practice with Overload Permit Policy." *Transportation Research Record 664* (1978) pp. 230-238.
2. Tide, R. H. R., and Van Horn, D. A., "A Statistical Study of the Static and Fatigue Properties of High Strength Prestressing Strand." *Fritz Engineering Laboratory Report No. 309.2,* Lehigh University (June 1966).
3. Rabbat, B. G., Kaar, P. H., Russell, H. G., and Bruce, R. N., Jr., "Fatigue Tests of Prestressed Girders with Blanketed and Draped Strands." *Transportation Research Record 665* (1978) pp. 13-21.
4. Rabbat, B. G., Kaar, P. H., Russell, H. G., Bruce, R. N., Jr., "Fatigue Tests of Full-Size Prestressed Girders." Portland Cement Association—State of Louisiana *Technical Report No. 113* (June 1978).
5. Abeles, P. W., and Barton, F. W., "Fatigue Test on Damaged Prestressed Concrete Beams." Duke University, Int. Symp. on Effects of Repeated Loading of Materials and Structures (Sept. 6, 1966).
6. Warner, R. E., and Hulsbos, C. L., "Fatigue Properties of Prestressing Strand." *PCI Journal* (Feb. 1966).
7. Warner, R. F., and Hulsbos, C. L., "Probable Fatigue Life of Prestress Concrete Beams." *PCI Journal,* Vol. II, No. 2 (Apr. 1966).
8. Hanson, J. M., Hulsbos, C. L., and Van Horn, D. A., "Fatigue Tests of Prestressed Concrete I-Beams." *J. of the Structural Division,* Proceedings of the American Society of Civil Engineers (Nov. 1970).
9. Gibbons, A. T., "Some Aspects of Structural Fire Endurance of Concrete." *Fire Technology,* Vol. 7, No. 1 (Feb. 1977).
10. Boon, J., and Monnier, T. H., "Fire Resistance of Prestressed Concrete Beams." *Heron,* Vol. 21, No. 1 (1976).
11. Gustaferro, A. H., "Design of Prestressed Concrete for Fire Resistance." *PCI Journal* (Nov.-Dec. 1973).
12. "Post-Tensioning Manual." Post-Tensioning Institute, Phoenix, AZ 85013 (1976).
13. "Assessment of Fire-Damaged Concrete Structures

and Repair by Gunite," *Concrete Society Technical Report No. 15,* Concrete Society Working Party (May 1978).
14. "Cracked Structural Concrete Repair through Epoxy Injection and Rebar Insertion." Kansas Department of Transportation, *Report No. FHWA-KS-RD 76-2,* Interim Report (1977).
15. "Repair of Hollow or Softened Areas in Bridge Decks by Reponding with Injected Epoxy Resin or Other Polymers." State Highway Commission of Kansas, *Report No. K-F-72-5,* Final Report (1974).
16. PALMER, R. A., "Emergency Bridge Repair in Minnesota." Prestress Concrete Institute (Jan.-Feb. 1974).
17. "ASTM Standard Specifications for Epoxy Resin Bonding Systems for Concrete," C881-78.

APPENDIX A

STATE OF THE ART

PRESENT PRACTICES FOR ASSESSING DAMAGE

Types of PCB (Prestressed Concrete Bridge) Girders Used

Thirty-six departments of transportation furnished information related to various types of PCB members being used. The numbers of departments using each type are as follows: I-section = 35, box section = 17, slab = 5, double-T =4, bulb-T = 3, and quad-T = 1.

The majority of the departments are using standard AASHTO girders. Alaska, Minnesota, South Dakota, Vermont, and West Virginia advised they use a double-T or channel PCB section design. Alaska predominantly uses precast prestressed deck top tee beams. Minnesota has designed a section they refer to as a quad-tee beam. The standards furnished show two, three, or four girders with depths of 18 and 27 in.

Agencies that advised they have developed and are using PCB sections other than standard AASHTO sections are the Atchison, Topeka and Santa Fe RR; California; Colorado; Kansas; Louisiana; Minnesota; Ontario, Canada; and Washington. Departments reporting construction of post-tensioned PCB are California, North Dakota, Tennessee, and Washington. However, there were no reports of damage to this type of structure.

A compilation of selected information furnished by 48 departments of transportation is given in Table A-1.

Incidence of Damage

All departments of transportation were requested to furnish the average number of PCB damaged per year. Those departments furnishing the number of PCB on their system showed a total of 23,344 bridges. These departments showed 201 PCB damaged per average year. On the basis of this information, 0.86 percent of PCB are damaged each year. The actual number of damages per year is undoubtedly higher because many respondents stated that the number of minor damages is unknown. However, in relation to the total number, the percentage of damages per year is low. Thirteen responding departments stated they have experienced no damage to PCB.

The major cause of damage has been from overheight collisions. Departments reported 162 PCB damaged per year from collisions, 5 PCB damaged per year from fire, and 34 PCB damaged per year from other causes. The "other" damage was caused by freezing water or deterioration from salt. Illinois, Maryland, and Michigan reported these causes of damage which principally occurred in precast box girder sections. The Atchison, Topeka and Santa Fe Ry. Co. reported the failure of shear keys between box girders on one bridge. This failure was caused by the roadbed ballast forcing the girders to spread. They will repair by epoxy injection prior to placement of steel plates over the girder joints.

Severity of Damage

The Information Request Form (App. B) had eight definitions for severity of damage. On the basis of the findings during this project, it has been concluded that assessment of damage can best be classified as minor, moderate, severe, and critical. (For damage descriptions refer to Chapter Three.) On the basis of these four definitions of damage severity, the responding departments reported the following: minor damage—72 percent average per year, moderate damage—8 percent average per year, severe damage—15 percent average per year, and critical damage—5 percent average per year (average percentage of total number of damage incidents per year).

Criteria for Assessment of Damage

Twenty-nine departments of transportation furnished comments and procedures used as criteria for assessment of severity of damage to PCB. Oregon advised they have no established criteria. Colorado, Mississippi, North Carolina, New Hampshire, and Ohio advised that visual inspections are made.

New Jersey performs visual inspection in conjunction with design calculations. Kansas, which reported no PCB damages, advised that first assessment of damage would probably be performed by field maintenance personnel. Inspection of damage would then be made by the engineering staff, and assessment of damage would be made following its study. In meeting with Texas, they advised that their assessment of severity of damage is based on visual inspec-

TABLE A-1

COMPILATION OF SELECTED INFORMATION

State, Province or RR Co.	No. of PCB on Highway System	No. of PCB Damaged per Average Year	Number of PCB Damaged per year by: Overheight Loads	Fire	Other
Alabama	No information available				
Alaska	90	3			All causes (3)
Arizona	156	8	8		
Arkansas	Very Few	None			
California	3498	7	7		
Colorado	166	2	2		
Connecticut	183	0	0	0	0
Florida	No specific figures, but much valuable information.				
Georgia	153	10	10	0	0
Illinois	675	3.9	0.4	0.5	2.9 Water Freezing
Indiana	900	1	1		
Iowa	300	4	1-1/2		(2-1/2)
Kansas	60	0	0	0	0
Kentucky	No information available				
Louisiana	485	11	9	1/3	1 Collision Damage (1-2/3)
Maine	No information available				
Maryland	35	7			7 Salt
Michigan	270	15	5	0	10 Water Freezing
Minnesota	720	10	10	0.2	
Mississippi	1000	1	1	0	0
Missouri	90	None			
Montana	800	2	2	<1	
Nevada	110	0	0	0	0
New Hampshire	25	1	1	0	0
New Jersey	60	1	1	0.1	Minor finish defects
New Mexico	434	2	2	0	0
New York	310	Unknown			
No. Carolina	Not Available	1	1	0	0
No. Dakota	166	15	15	0	0
Ohio		None	0	0	
Oklahoma	1500	None	0	0	0
Oregon	Unknown	2 or 3	2 or 3		
Pennsylvania	2778	Unknown (20)	20	<1	
Rhode Island	69	None	0	0	
So. Carolina	1000	3	3		
So. Dakota	400	Very Few			
Tennessee	957	1	1		
Texas	3263	20	10	1 or 2	Unknown (8)
Utah	420	4	4	0	0
Vermont	30	None			
Virginia	380	0.5	0.4	0.1	
Washington	500+	13.5	13.5		
W. Virginia	125	None	0	0	
Wisconsin	635	20	20		
Wyoming	Few	None			
Ontario	400	10	10	0	0
Burlington Northern	4 or 5	None			
Atchison, Topeka & SF	197	None			
Totals	23,344	201	162	5	34

Note: Information is shown as it was furnished in the questionnaire, except where information is shown in parentheses ( ). These figures were determined by deduction.

tion. This information is reviewed to determine if loads actually being carried by the girder will result in less than design stress. If this is the case, concrete repairs are made. If this is not the case, the girder is replaced. Texas has not attempted to repair-in-place damaged girders to attain original structure capacity. The decision to repair or replace is normally the responsibility of the bridge construction engineer.

Nine departments of transportation reported assessment of damage with relation to structural integrity as follows.

1. *Florida*—Following field inspection, the damaged girder is structurally assessed and actual loads being carried by the girder are calculated. Vertical measurements are made during inspection. Prior to making a decision to replace, possibilities to repair-in-place are evaluated. In borderline cases, the structures and facilities engineer consults with the design engineer prior to making the final repair procedure decision. The final decision is normally the responsibility of one individual; the structures and facilities engineer. They assess severity of damage on the basis of loads actually being carried and may repair-in-place girders that have several severed strands and/or badly damaged concrete. They assess effectiveness of repair by monitoring the repaired girder on an established inspection schedule.

2. *Illinois*—Following field investigation, a structural analysis is made to determine load capacity and rating. A reduction from original design rating results in replacement of the damaged girder. Where strands are severed and/or concrete is badly damaged, the girder is replaced. Most damages are caused by third parties and are covered by property-liability insurance.

3. *Indiana*—The number of broken strands and extent of concrete damage determines course of action.

4. *Louisiana*—The strength requirements and condition of prestressing strands and reinforcing steel, related mainly to corrosion, determines action. In meeting with Louisiana, they advised that they have not repaired many damaged girders-in-place. Damages are generally third-party accidents and are covered by property-liability insurance, They do not determine actual load-carrying requirements but replace girders to original design requirements. In one instance a girder was repaired-in-place with one broken strand. A damaged girder with 3 severed strands out of a total of 32 was replaced. In discussions regarding assessment of transverse cracking, one individual stated that it would be hard to conceive a bottom flange with a transverse crack not having a serious concrete spall or strand damage.

5. *Montana*—Damaged girders are replaced if strands have been broken or damaged by impact or if sufficient spalling was caused by heat.

6. *Pennsylvania*—The loss of more than 1 or 2 strands or loss of shear strength indicates girder replacement.

7. *South Dakota*—Severe damage includes severance of tendons.

8. *Tennessee*—If a significant number of prestressing strands are broken or have lost integrity, the girder is replaced.

9. *Utah*—The loss of significant prestressing force indicates girder replacement.

Eleven departments of transportation furnished more detailed criteria for assessment of severity of damage. The assessment of damage by these eleven departments is as follows:

1. *Arizona*—They listed three criteria for assessment of damage in relation to their reported damages and in relation to the severity of damages listed in the "Information Request": (a) Severity 1 = no reinforcement exposed and/or compressive strength of concrete not impaired; (b) Severity 2 = reinforcement and/or ruptured, compressive strength impaired, or damage very unsightly; and (c) Severity 5 = structural integrity of the member affected.

2. *Minnesota*—Three damage assessment definitions are: (a) Minor = small areas of concrete removed but no exposed reinforcing; (b) Severe = any repair of concrete because of exposed reinforcing; if damaged area over traffic lanes, temporary traffic restriction required; any (c) Major = PCB cracked beyond repair or severe loss of prestressing strands warrants replacement.

3. *North Dakota*—Three damage assessment definitions are: (a) Minor = concrete scraped or chipped with small amount of reinforcing exposed; (b) Moderate = concrete damaged, reinforcing steel exposed, and some prestressed strand exposed; and (c) Major = concrete, reinforcing and prestressing steel exposed to the extent that measures other than normal patching required.

4. *South Carolina*—Three rather specific criteria for assessment of damage are: (a) If four or more strands are cut and there is extensive cracking throughout most of the beam, replacement is required; (b) If cracking is localized and some strands are cut, repairs are made to restore section with or without posttensioning; and (c) If no strands are cut, only concrete repair is necessary.

5. *Wisconsin*—Their criteria for assessment are related to cracking of concrete and are the following: (a) If cracking and spalling are limtied to the lower flange, patching is usually performed; (b) If cracking continues from flange into web, the girder is normally replaced; and (c) If any doubt, termini of cracks are marked and if the cracks continue after a period of time, the girder is replaced.

6. *California*—This department maintains personnel within the responsible division to inspect reported damages. Their visual and physical inspection includes the following criteria for assessment of damage: (a) The patterns and severity of cracking are measured and recorded; (b) Horizontal displacement between locations of unaffected bond are measured and recorded (these displacements are used to estimate the stress in the exposed strand at impact); (c) The damaged concrete area is checked by sounding to estimate the amount of internal rubble cracking; (d) The surrounding diaphragms and deck system are inspected to determine reflection of impact forces; (e) Deflection tests are made on exposed prestress strands; and (f) The number of severed or yielded strands is noted and recorded. California also assesses damage in relation to actual loads that are allowed on the particular section of highway. They designate highways on the basis of three distinct loadings. These loads are designated orange, green, and purple and are specific configurations and weights of trucks allowed on that highway. Also, they assess damage in relation to the actual load they calculate the girder will carry. When the assessment determines that the damaged girder can perform to these criteria, without overstress, the girder will be repaired. This normally occurs when the damaged girder is a facia girder and the bridge is not planned to be widened in the next 5-year period.

7. *Georgia*—Information and procedures for damage assessment are: (a) Severity of spalls is noted and recorded; (b) Severity of cracking is noted and recorded; (c) The exposure and damage to nonprestressing steel is recorded; (d) Damage to prestressing strands is noted; (e) The location of damaged girders and structure is recorded; (f) The traffic loading is recorded; and (g) The exposure of possible other damage is estimated and recorded.

8. *Ontario, Canada*—They listed four definitions relating to assessment of damage as follows: (a) No reinforcement is exposed; (b) Reinforcement is exposed; (c) Prestressing strands are exposed; and (d) If more than approximately 20 percent of the strands are broken or large chunks of concrete break off with extensive cracking, the girders are usually replaced.

9. *Michigan*—The following procedures are followed when damage is reported: (a) When damage is noted, first inspection from ground is with binoculars by the maintenance supervisor; (b) If warranted, hands-on inspection is performed by the maintenance engineer and the bridge repair crew foreman; and (c) If cables or major concrete areas are damaged, further inspection is performed by the bridge design specialty engineer. The assessment of severity of damage is defined as follows: (a) Minor surface damage = no repair work; (b) Moderate concrete damage = surface patching; (c) Cable damage (minor) = concrete patching; (d) Cable damage (moderate) = replace strands and reinforcement, patch concrete; and (e) Cable damage (severe) = replace beam.

10. *Washington*—Personnel with the bridge and structures engineer's office are responsible for inspection and assessment of damage to PCB. These personnel are under the general supervision of the bridge operations engineer, and direct supervision of the bridge condition engineer. Their visual and physical inspection of damage includes the following information for assessment of damage: (a) Location of damaged girders and location of specific damage on each girder; (b) Crack data, including location, length, width, and configuration of all cracks; (c) Size and configuration of concrete spalls; (d) Measurement of dislocations of beam alignment; (e) Amount, location, and degree of damage to prestress strands and reinforcing steel; and (f) Effect of damage on traffic and required traffic restrictions. All personnel responsible for inspection and assessment of damage, and the final repair procedure are within one office. This provides all participants the opportunity to utilize each other's expertise. On completion of the field inspection, the bridge operations engineer in conjunction with the bridge engineer for design, assess the damage based on the remaining integrity of the girder. Damage to, or loss of, prestress strands is evaluated. When this damage is critical, the girder is replaced. Loss of concrete section without severed strands may allow repair-in-place, with or without preloading.

11. *Iowa*—They have developed the following general criteria for assessing and repairing damaged PCB girders (each of these four criteria is also illustrated by an accompanying photograph): (a) Critical damage = at impact point, bottom flange and part of web are completely destroyed; all strands are exposed and some strands may be severed; and extensive web cracking exists—replacement required. (b) Severe damage = at impact point, bottom flange is heavily cracked and concrete is fragmented in cracked area exposing strands; and extensive web cracking exists—repair marginal. (c) Moderate damage = at impact point, bottom flange is cracked with minor web cracking; the core has some loss of section and some strands may be damaged; and concrete cracks are tight—epoxy repair possible. And (d) Slight damage = superficial surface spalling exists with possible damage to a single strand. In meeting with Iowa, they advised that when concrete within stirrups is fractured, they normally replace the girder. They believe it is impractical to restore a girder thus damaged to equal original design by repair-in-place methods. Generally, damages are third-party accidents and are covered by property-liability insurance.

Inspection of Damaged PCB

The offices reported to be responsible for inspection of damaged-in-place PCB girders are:

Office	Number of Agencies Reported		
	Always	Sometimes	Never
Bridge Engineer	21	15	2
Highway Maintenance Engineer	12	12	4
Other	5	2	4

The inspection of damage was reported to be performed by:

	Number of Agencies Reported		
	Always	Sometimes	Never
Structural Engineers	23	13	
Other	8	7	3

The "other" category generally included specially trained personnel such as the bridge inspection units or highway and bridge maintenance engineers responsible for geographic areas.

Inspection Equipment and Skills

Twenty-nine departments listed some type of specific equipment used or skills required to inspect damaged girders in the process of damage assessment. This information is summarized in four general areas as follows:

1. Traffic control—traffic signs, traffic cones and barricades.

2. Skills, equipment, and material for recording damage —a critical mind, good eyesight, plans of damaged bridge, camera.

3. Equipment to get to damage area—automobile, truck with man-lift (basket truck), snooper—underbridge inspector, cherry-picker type cranes, front end loaders, scaffolding, ladders.

4. Equipment used for damage assessment—flashlight and mirror; magnifying glass; tape measure, ruler, string line, clearance rod, level; sounding and chipping hammers, chisel, pick axe; crack gages, feeler gages; Swedish hammer, concrete strength indicators; ultrasonic test equipment, pachometer, oscilloscope; concrete coring equipment; dye penetrant.

Damage Reports

Twenty-seven departments listed specific items of information included in damage reports for PCB members. Arizona, California, Connecticut, Florida, Louisiana, and New Mexico furnished sample damage reports. No department submitted a standard report form which was used for all PCB damages. In general, the reports are in letter form describing the damage, assessing the severity of damage, outlining possible repair procedures, and estimating the cost of repair. Some departments of transportation include standard law enforcement accident reports to supplement their damage reports.

The State of California has developed a system for recording all known damages for each PCB on the system. This information is filed in chronological order in each individual bridge file and provides ready access to each structure. This provides personnel the opportunity to assess frequency of damage, severity of past damage, and repair procedures that have been used for previous damage in one complete file. This file also includes all other inspection reports for the bridge and shows work required and accomplished on the structure from all causes. A separate photographic file of all damages to PCB is also maintained This file can be used to see the various damages and to direct personnel to the specific bridge file for detailed information. California also uses this file for cross-reference purposes.

The Florida "Bridge Inspection Report" of damage includes maps showing location of the bridge. Information shown includes Bridge No., State Road No., Section No., County, and Date of Inspection. A detail map shows exact location of bridge. The damage report is in letter form and includes date and time of notification and inspection. The report lists significant previous damages and repairs made to structure members damaged by the latest collision. The "Traffic Accident Report" as prepared by the enforcement officer is included in the report and is referred to in the damage report. Damage to members is described, and an analysis is given for each member. Recommendations, with special action required, are stated. The inspection report shows a numerical rating of the damage, the equipment used for inspection, and the individuals and titles of the personnel performing the inspection. A bridge repair cost estimate is included as are the photographs of the damage.

Damage Reports Summary

Reporting PCB damage is accomplished by a written or verbal narrative. The inspection performed is generally on an individual basis, and photographs and sketches are included in the reports. Inspection is performed by a structural engineer when the damage is significant, and generally significant damage is reported as soon as it is observed. Information included in damage reports by the responding departments can be summarized in five general areas:

1. Effect on traffic and required restrictions.
2. Identification of damage—bridge identification and location, cause of damage, description of bridge.
3. Detailed description of damage—specific location and number of damaged members; specific location of damage on each member; measurement of girder alignment to determine dislocation and camber reflection; severity of individual girder damage; size and configuration of concrete spalls; configuration of cracks including location, length, width, and number; damage to prestress strands and reinforcing steel including location, number, severity of damage, and exposure; roadway deck, girder bearing and cap damage.
4. Repair procedures—type, method, and extent of recommended repairs.
5. Estimate of repair costs.

PRESENT PRACTICES FOR MAKING REPAIRS

Responsibility for Plans and Specifications

All reporting agencies stated that the bridge engineer's office is responsible for the preparation of plans and specifications for repair or replacement. Additionally, these plans and specifications might be prepared by consultants (noted by the New York State Department of Transportation), the district engineers' offices (noted by the Louisiana State Department of Transportation), and the materials engineer and research office (noted by the Kansas State Department of Transportation).

Accomplishment of Work

Comments that varied to some degree were made regarding who accomplished the repair work. The state transportation departments of Washington, Iowa, Michigan, Wisconsin, and Kansas reported that the agency did minor repairs but major repairs were by contract. The state transportation department of Illinois reported that repairs were made by contract if the repair work was specialized or that cost of repair exceeded $50,000. Otherwise, repair is by the agency. The state transportation departments of Utah and Texas reported that if a girder had to be replaced, the work was performed by contract. Otherwise, repair is by the agency. The state transportation departments of Virginia and Indiana reported that their repair work to date had consisted of replacing one or more girders by contract. The state transportation departments of New Jersey, Louisiana, Connecticut, Montana, Arizona, Tennessee, and New Mexico reported that the majority of their repairs are performed by contract. The state transportation departments of Georgia, Oregon, Colorado, Mississippi, North Dakota, South Carolina, California, Minnesota, and Ontario, Canada, reported that the majority of their repairs are performed by the agency. The state transportation department of New York reported 50 percent work performed by contract and 50 percent work performed by the agency.

In summation, severe damage is generally repaired by contract and minor damage is repaired by the agency.

Costs

Cost information received from agencies varied as given in the following tables (costs are based on only one girder being replaced per bridge; see also Chapter Three for this research project cost conclusions):

Cost of Replacing Damaged Girders

Agency	Cost per Girder
State of Washington	$20,000 to $40,000
State of Iowa	$30,000
State of Pennsylvania	$100,000 *
State of Illinois	$40,000
State of Louisiana	$50,000 to $55,000
State of New Mexico	$35,000 approx.
Province of Ontario, Canada	$50,000
	$48,000 average

* May include higher traffic control cost.

Cost of Repairing Girders in Place

Agency	% Cost of Repair in Place / Replacement
State of Washington	50% (Major Repair)
State of Illinois	10% *
State of New York	50% (Major Repair)
State of South Carolina	20%
State of New Mexico	15%
	30% Average

* Additional funds are deposited to provide for replacing epoxy patching at 10-year intervals.

Rationale for Selection of Repair Methods

All agencies were asked to rank the relative importance of the following factors in determining repair method and procedures; the situation was to be considered "the norm." The overall rankings given in the following were arrived at by taking the average of all number rankings given; number one would be the highest possible ranking:

Load Capacity	1.3
Durability	2.5
Inconvenience to Users	3.2
Speed of Repairs	3.7
Cost	4.1
Esthetics (assume grade separation)	5.3

All agencies were asked whether the following factors were assessed in making decisions for repair (the answers are as shown; the numbers indicate the number of agency responses):

Factor	Is the Factor Assessed		
	Always	Sometimes	Never
Ultimate Load Capacity	19	6	2
Overload Capacity	8	12	6
Service Load Capacity	27	1	
Fatigue Life	6	6	14

Unless it is visually obvious that a girder is damaged beyond repair, all agencies calculate the service load capacity of the damage girder. Most agencies calculate the ultimate load capacity of the damaged girder.

A number of states consider overloads in making decisions for repair procedures. Several concepts that differ to some degree were reported. One concept depends on girder location in the bridge. If it is located behind a barrier or a curb, or under a sidewalk, and it can be calculated that this girder will not receive as much overload as an interior girder, and if it is also known that this bridge will not be widened, a decision may be arrived at not to replace this girder. An interior girder having the same damage might require replacement.

Another concept involves overloads and bridge replacement schedules. One prerequisite in this concept is that the girder has been damaged to a minor degree (a strand or two exposed or perhaps one or two strands severed). If the bridge is scheduled to be replaced in 5 to 8 years, the girder may not be repaired. The other prerequisite is that the girder is not subject to heavy overloads.

In another overload concept, if a girder suffered hairline cracking only, overload calculations would not be made. If a girder was cracked severely, overload calculations would be made and those results would become a part of the repair consideration. The overload used might depend on the bridge location.

One agency reported that they have highway routes with different overload ratings. They consider overloads in making their repair decisions, but they do not actually make calculations.

One or more agencies reported that they seldom check overload capacity. If a damaged girder received a large number of overloads, they would consider overload capacity in making their repair decision.

No actual overload calculations were available. The foregoing comments reflecting the state of the art are of limited value. For guidelines regarding overload, the reader is referred to the "Overload Capacity" section in Chapter Three.

Several agencies consider fatigue life as a judgment factor in making decision for repair procedures . Some agencies realize that if a girder has been cracked, the fatigue life may be reduced because of the increased stress level in the prestressing steel at the crack. If the crack opens and closes under service loads, the fatigue life will be reduced (see "Fatigue Life" section in Chapter Three). One agency reported that if an exposed element had a "notch" or abrassion on it, they would consult with their materials laboratory regarding reduction in fatigue life. No definite results, calculations, or procedures were obtainable from this agency or any other agency for assessing fatigue life.

Each agency was asked to give additional rationale for selection of repair methods. The following individual comments are from separate agencies.

1. If sufficient prestress force has been lost and repair requires restoring prestress force, the girder has usually been replaced.
2. Replace the girder if the core inside the stirrups has been fractured and/or lost with loss of compressive force in the concrete.
3. Selection is based on expected life of other members in superstructure.
4. Visual inspection has been sufficient as damage has been either superficial or critical (insurance has paid for replacements).
5. The decision is based on the load-carrying capacity of the damaged member (i.e., the number of strands severed in a girder). If the in-place repair would result in having to post the bridge for reduced loading, the girder would be replaced.
6. The decision would be based on cost and time out of service for repair or replacement.
7. The decision would be based on an engineering evaluation of the severity of damage.
8. If the cracks are tight and there is no loss of ultimate strength, the girder would be repaired in place.
9. The girder will usually be patched and sealed in place if it is feasible to do so. (This agency does not consider patching and sealing a repair.)
10. One girder had one severed cable. The total load capacity was not impaired. The girder was repaired by concrete patching and left in place.
11. Repair generally consists of epoxy grout injected or applied by a specialty contractor. Where loss of prestress is indicated, a preload may be specified prior to grouting. Loss of tendons has been minor, and no tendons have been spliced.
12. The decision is based on structural integrity, member capacity to carry design load, comparison of cost and time for repairs and replacement, etc.
13. If the ultimate strength cannot be restored by carrying out repairs in-place, the girder is usually replaced.

Some of the foregoing comments are too general to be of much value. Guidelines for selection of repair method are given in Chapter Three.

Present Methods of Repair In Place—Plans

Each agency was asked if they had used the following

methods of repairing girders in place: epoxy injection (EI), splicing of strands (SPL), adding prestress (PF), adding mild strength reinforcing (RS), preload structure prior to repair to induce final acceptable stress (PRE), and other. Table A-2 presents the responses from the agencies.

To compile information from the plans furnished for repair-in-place methods, this section is divided into two main categories. The first category is repair of damage caused by collision. The second category is repair of damage caused by fire. The incidence of fire damage is only 2.5 percent of the total damages reported. Repair-in-place methods are further categorized in relation to minor damage, moderate damage, and severe damage. As defined in Chapter Three, critical damage requires replacement.

Damage Caused by Collision

Minor damage, as defined in this report, consists primarily of spalls, which may be rather extensive, but do not expose reinforcing steel. This damage is repaired by patching the area to original configuration. Moderate damage consists of spalls that expose reinforcing steel and cause hairline cracks within the damaged section. This damage should be repaired by injecting the cracks with epoxy, applying preload as required, and placing new concrete or epoxy grout to restore the area to the original configuration. Severe damage consists of cracks extending across the width of the bottom flange that close, severed or visually deformed strands, major loss of concrete section in the bottom flange, loss of the web section, horizontal misalignment which does not exceed that normally allowed in fabrication. This damage should normally be repaired by application of preload as required, and with the addition of prestress force, in addition to placement of concrete and epoxy injection of cracks.

Repair-in-place methods were furnished by transportation departments of Arizona; California; Connecticut; Florida; Louisiana; Michigan; Ontario, Canada; South Carolina; Texas; Virginia; and Washington. Most of these plans were prepared for public advertising, with the work performed by bridge or specialty contractors, or both. Minor repairs were often part of girder replacement projects, or would have probably been performed by state forces. California has established procedures whereby repair work involving epoxy injection may be jointly performed by state forces working in conjunction with a specialty firm by negotiated agreement.

Fifteen sets of plans detailing repair-in-place techniques were reviewed: four of these repairs have been categorized as minor damage; five, as moderate damage; and six, as severe damage. Additional information (not included in the evaluation results in Chapter Two) detailing procedures used by the Illinois and Texas transportation departments on work accomplished by their state forces describes different techniques used in repair of damaged girders, and should be given special consideration. The following gives a description of damage and information that could be useful to engineers responsible for repair of damaged PCB girders. Listing the information by state and damage severity provides an insight to the various techniques used. This may also provide a desired contact for further information regarding the technique and evaluation.

Minor Damage. The four repairs categorized as minor damage are as follows:

1. *Arizona*—On a job titled "Buckeye Road, Thomas Road, Glendale Avenue, Indian School, Road Repair Details," designated girders were specified to be repaired in place. No mention was made of damaged or exposed reinforcing prior to repair work. However, provision was made for possible epoxy injection. (Some repair work might have been in moderate damage category.) These plans included the replacement of three damaged girders, and specified the following:

   a. Where necessary, remove all damaged and shattered concrete as directed by the Engineer. All areas to be patched shall be thoroughly cleaned or chipped to sound concrete in order to remove any smoke or oil residue prior to patching. Extreme care shall be exercised in concrete removal so that exposed prestress strands are not damaged. No impact tools will be permitted.
   b. Where necessary, pressure inject all major cracks in girders as directed by the Engineer with an approved epoxy. One-way valves shall be set in the cracks to inject the epoxy. Injection sequence shall be from bottom areas of girder toward top areas.
   c. Restore girder sections to the original size and shape with an approved epoxy mortar.
   d. Contractor shall submit all epoxy mix designs for approval by Materials Services.
   e. Any additional damage caused by the Contractor during reconstruction shall be repaired at no cost to the Department.

2. *California*—Hazel Avenue Bridge No. 24-168 was damaged in February 1974 by overheight collision on the outside girder. The report of damage was made by an employee of the department from observation on way to work. The girder was severely cracked from the impact. Two strand conduits were exposed, but with no visible damage. There was no visible change in vertical or horizontal alignment. Although this damage could be classed as moderate, the following CALTRAN recommendations repaired the girder as minor damage:

   a. Although there has been severe damage to the girder, no reduction in loads crossing the structure is necessary. This girder is under the sidewalk and affected very little by vehicular traffic. There is practically no pedestrian traffic on this structure.
   b. Repair of the existing girder is adequate under the present loading conditions and replacement will be necessary only if the roadway is to be widened.
   c. Repair the damaged girder by injecting the cracks with epoxy using a commercial system. After the injection work is completed, the concrete is to be patched with a PCC mortar; an airblown mortar will be satisfactory.
   d. Match the patch as closely as possible to the color and surface texture of the adjacent concrete.

3. *California*—Hazel Avenue Bridge No. 24-168 was again damaged in June 1978 by an overheight collision:

   a. Three girders were damaged and two had an exposed tendon conduit but they are not damaged. No cracks are visible from ground line, and repairs will consist of patching the spalled area. Patching was being done on date of inspection by the maintenance crew using airblown mortar.

TABLE A-2

REPAIR-IN-PLACE METHODS

Agency *	EI	SPL	PF	RS	PRE	Special Explanation
Arizona	X			X		See Note 8
Atchison, Topeka & Santa Fe Ry. Co.	X					
California	X	X		X		See Note 11
Connecticut	X		X			See Note 12
Florida	X				X	
Georgia	X		X	X		See Note 13
Illinois					X	
Indiana						See Note 6
Iowa	X					
Louisiana	X					
Maryland				X		See Note 4
Michigan	X					
Mississippi						See Note 5
Montana	X				X	
New Jersey						See Note 5
New Mexico					X	
New York	X				X	
North Carolina						See Note 5
North Dakota	X				X	See Note 10
Ohio	X					
Ontario, Canada	X	X		X	X	See Note 14
Oregon	X					See Note 5
Pennsylvania	X					See Note 3
South Carolina			X			See Note 9
Tennessee	X					See Note 5
Texas					X	See Note 2
Utah	X					
Virginia	X					Gunnite
Washington	X	X	X	X	X	See Note 1
Wisconsin		X				See Note 7
Totals	20	4	4	6	9	

* State Department of Transportation unless otherwise noted.

Note 1:

The Washington State Department of Transportation has added post-tensioning to restore loss of prestressing. Their use of strand splicing and reinforcing has been restricted to the use of short lengths of unstressed strand and reinforcing bars in the damaged area to partially restore strength.

Note 2:

The Texas State Department of Transportation has made repairs with epoxy, regular concrete and gunnite.

Note 3:

The Pennsylvania State Department of Transportation has used non-structural cosmetic patching.

Note 4:

The Maryland State Department of Transportation has (as a temporary measure) replaced mild steel reinforcing in the top flange of prestressed box girders in the positive moment region. The damage was caused by deicing chemicals.

Note 5:

The state transportation departments of New Jersey, Oregon, Mississippi, North Carolina and Tennessee have used epoxy mortar patching.

Note 6:

The Indiana State Department of Transportation has used concrete patching with epoxy bonding compound.

Note 7:

The Wisconsin State Department of Transportation noted that they have added short lengths of prestressing strand in minor damaged areas to strengthen concrete patches.

Note 8:

The Arizona State Department of Transportation has replaced damaged stirrups or mild steel reinforcement in kind. They have also added a short piece of reinforcing in a concrete patch to supplement the patch strength.

Note 9:

The South Carolina State Department of Transportation has added external high-strength post-tensioned rods to restore loss of prestress due to severed strands. For a more detailed description of this splice, see Splice No. 11 in Chapter 2.

Note 10:

The North Dakota State Department of Transportation noted that they have two damage occurrences where they have started repair by epoxy injection combined with the use of preload.

Note 11:

The California State Department of Transportation has spliced prestressed rods (see Chapter 2 - Repair Methods - Splice No. 9). This state also noted that they have replaced in kind damaged or severed mild steel reinforcement.

Note 12:

The Connecticut State Department of Transportation has added post-tensioned rods to repair a construction defect in a prestressed girder. For a more detailed description of their strengthening method, see Splice No. 10 in Chapter 2.

Note 13:

The Georgia State Department of Transportation has added a mild steel reinforcing bar to supplement the strength of a single slightly damaged prestress strand. They are considering adding external prestress force to repair a damaged girder.

Note 14:

The province of Ontario, Canada has spliced strands (see Splice No. 6 in Chapter 2).

b. A girder in another span was damaged in July 1978. This is the girder which replaced a girder damaged by an overheight load, the work done only a few months ago. The damage is a spall at impact area over a length of 3.8 ft (1.16 m) exposing one longitudinal No. 4 reinforcing bar and severing one stirrup. The prestress strand is undamaged. The impact area is about 6 ft (1.83 m) from the center of the span directly over the lane. Cracks in the girder web extend to the south at the upper fillet to within about 9 ft (2.74 m) of Pier 4 on the westerly and 16 ft (4.88 m) on the easterly face. They extend diagonally downward near the diaphragm near midspan. There is a diagonal crack across the bottom face of lower flange approximately 10 ft (3.05 m) each side of the impact point. Cracks across the flange are very light, and there is no visible offset. The maximum size crack is longitudinal in the web at the upper fillet and is about 3/64 in. (1.19 mm) wide.
c. Severity of the damage is too light to justify a traffic restriction on the upper deck, and repair by epoxy injection into the cracks plus patching of the spall should restore the girder satisfactorily.
d. In addition to recommendations for damage of February 1974: Removal will be done with hand tools only to avoid the possibility of nicking a prestress strand. Restore the bent and severed reinforcing steel. The longitudinal No. 4 bar may be cut in two near the center of the exposed length, straightened to line, and an additional No. 4 bar spliced into place by wiring it to the existing bar. Restore the No. 4 bar stirrup by bending it into position and butt welding together. It may be necessary to splice a new piece into place to replace part of the existing bar. It is imperative that the prestressing strand be fully protected from excessive heat or weld spatter in this operation. It may be done with asbestos sheets.

4. *Texas*—On Tornillo Interchange Overpass several girders had minor damage consisting of rather extensive spalls along the corners of the flanges. One corner tendon may have been exposed. Two girders in one span were also replaced. The plans clearly showed location of damage and the extent of damage. Patching of these spalls was accomplished by sawcuts, ½ in. deep, being made in sound concrete to provide a minimum depth of patch. All unsound concrete within damaged area was removed. One-quarter-inch vertical and horizontal dowels, located on the outside of the prestress strands, were placed at 2-ft centers. Dowels were placed in drilled holes with epoxy. One No. 3 longitudinal reinforcing bar was located at the intersecting point of the dowel bars. The damaged concrete surface was coated with epoxy prior to placement of the patch. A 1-in. clear distance was required from the added reinforcement to face of concrete.

Moderate Damage. The five repairs categorized as moderate damage are as follows:

1. *Florida*—Four girders in one span were damaged on Bridge No. 160174 in Polk County. Three girders had spalls ranging from 6 ft (1.83 m) long by 9 in. (289 mm) wide by 1 in. (25.4 mm) deep to 16 in. (406 mm) long by 6 in. (152 mm) wide by 1 in. (25.4 mm) deep. There were no visible cracks and no stress cables were exposed. The fourth girder was more extensively damaged. The spalled area was 7 ft (2.13 m) long by 18 in. (472 mm) wide by 5 in. (127 mm) deep. Three stress cables were broken and three more exposed. There is also a crack in the top portion of the web of the beam. This crack is approximately 17 ft (5.18 m) long on the north face of the beam. The crack extends 5 ft (1.52 m) either side of the spalled area. The crack on the west side of the spall meanders down to the bottom of the beam. (Note: Damage to the fourth girder is severe damage, but is included here because repairs for all damages were the same.) Repairs were accomplished as follows:

a. All loose materials were chipped away from the beam. All wire strands were chemically cleaned and retied across the spalled portion of the beam.
b. After the wires were repaired, the spalled area was packed and plastered with Speed-Crete and fittings were added to allow pressure grouting.
c. After the Speed-Crete had set, liquid epoxy was injected in the fittings, and all remaining voids were filled with this mixture. The epoxy was injected under pressure and material was pumped until it was seen escaping from the hairline cracks, thereby ensuring that all voids were filled.

A structural evaluation was made of the extensively damaged beam. This analysis resulted in comparisons to the original, the damaged, and the repaired section. The conclusion of the analysis was that a legal vehicle (4-axle single unit) will overstress the beam, and considering the type of facility, the beam should be replaced. (Repair was made subject to review by analysis.)

2. *Louisiana*—One girder on Brooks Road Overpass was was damaged, resulting in an extensive spall on one corner of the bottom flange. One strand out of a total of 38 was broken. (Note: Because only one strand was broken, this damage was placed in the moderate damage category.)

a. Where new concrete is to be bonded to existing concrete, the existing concrete is to be coated with an epoxy adhesive conforming to AASHTO designation M 235-73I, Class I, and shall be applied in accordance with the manufacturer's recommendations. Epoxy adhesive may be Epoxtite Binder as manufactured by Grace Construction Products, or approved equal.
b. Girder requires repair near mid-span. Loose concrete to be removed and exposed sections of broken strand are to be cut and removed. After cleaning loose concrete and removing broken strands, girder is to be epoxy grouted to the original shape.

3. *Michigan*—A facia girder on Giddings Road Over I-75, north of Pontiac, was damaged by overheight collision. The damage consisted of concrete spalls and cracks over a length of approximately 23 ft (7.01 m). The cracks extended from the bottom flange diagonally up the web to the top flange fillet, with a longitudinal crack extending along the fillet line for approximately 15 ft (4.57 m). The location and size of spalls and cracks were well defined on repair drawings. Specific requirements shown on the plans and specified by the department are as follows:

a. The areas for concrete patches are shown by dimensions. The areas to be patched are sufficiently larger than the spalled areas to ensure that patches extend to sound concrete.
b. The boundary of the areas designated on the plans or by the Engineer requiring epoxy mortar or concrete patching shall be sawcut or air chiseled a minimum of ¼ in. (6.35 mm) deep and 1 in. (25.4 mm;

outside the unsound area. All unsound and deteriorated concrete within the enscribed area shall be removed by approved pneumatic chisels to a minimum depth of 1 in. (25.4 mm). Air hammers larger than 30-lb size shall not be used unless authorized by the Engineer. Exposed reinforcing steel shall be cleaned of heavy rust deposits by sandblasting. Prepared areas shall be cleaned and sandblasted free of contaminants immediately prior to priming and patching with epoxy mortar or concrete. All loose material shall be removed by dry sweeping and blowing out with clean, dry compressed air at 90 psi.

c. When the clean and dry prepared areas have been approved by the Engineer, they shall be primed with a heavy brush application (approximately 10 mils) of the premixed epoxy cement binder containing no aggregate. The two components of the epoxy cement binder shall be combined at the proper ratio by volume or weight and thoroughly mixed in a clean container for 3 to 5 min. No larger quantity shall be mixed than can be used before the primed surface becomes tack free, normally about 1 hr. Quantities of 1 to 5 gal may be thoroughly mixed using a pneumatic stirrer or electric ½-in. drill with a stirring paddle operating at 250 to 900 rpm. Concressive 1173 mortar shall be used to patch the spalled areas of the beam. Concressive 1001 shall be applied as a surface coating over the patched areas to produce a gray appearance similar to concrete. The concrete surface to be patched must have a temperature of at least 50 F and rising. Dry quartz aggregate meeting the gradation requirements of 2NS sand but allowing 100 percent to pass the No. 8 sieve will be acceptable for this mortar.

The materials shall be as specified in Article 8.16.06 of the Department's Standard Specifications for Highway Construction, 1970 Edition, "Epoxy Resin Binder for Joint Spall Repair," except that only Type I shall be used. Concressive 1173 and Concressive 1001 as manufactured by the Adhesive Engineering Company, Lawrence, Mass., or approved equals, will be acceptable materials under this specification. The epoxy mortar or concrete made with Type I epoxy binder, when mixed as described herein, shall have the following approximate proportions, depending on the average depth to be patched.

	Quartz Mortar Mix	25A Concrete Mix
Depth of patch	less than 2 in.	2 in. or more
Epoxy binder, gal per cu ft of mix, min.	2 to 2¼ *	2 to 2¼
Ratio of epoxy to total aggregate, (sand and gravel) approximate, by loose vol.	1 to 3.5 *	1 to 4 *
Ratio of fine aggregate to coarse aggregate (by weight, approximate)	—	50 to 50

* These mix figures are approximate and may vary sightly with gradation of fine aggregate and coarse aggregate. The higher epoxy binder contents will be needed for areas requiring a more fluid mix. The minimum of 2.0 gal of epoxy binder per cubic foot of mixture should give a stiffer mix for compaction by tamping.

d. Repair to structural cracks shall be accomplished by a company that has been engaged in this type of work for at least two years. Certification shall indicate that the personnel who will perform the repair are experienced in this work. The material for crack repair shall be an epoxy resin adhesive capable of injection into and travel in a crack 0.002 in. (0.05 mm) wide. It shall be Concressive 1050-15 as manufactured by Adhesive Engineering Company, Lawrence, Mass., or an approved equal.

All cracks to be repaired shall be routed, if necessary, and sealed with a temporary seal of No. 1180 or Concressive 1192 as manufactured by the Adhesive Engineering Company, or approved equal. The temporary seal shall be applied in such a manner that the surface of the concrete will not be defaced and the seal shall be capable of containing the pumped epoxy resin adhesive.

The spacing of the entry ports for the epoxy resin adhesive shall be selected so as to assure complete distribution of the material throughout the cracks. Injection shall be accomplished by holding a rubber-tipped nozzle flush against the entry port. The injection equipment shall be of a positive displacement, fixed ratio type capable of automatic mixing of two components at the nozzle, and equipped with drain back plugs and a rubber nozzle arrangement that will allow injection of adhesive at pressure in excess of 100 psi without defacing the concrete. Injection shall begin at the lower entry port and continue until there is evidence of adhesive at the entry port directly above or adjacent to the port being pumped. When travel is indicated, the injection shall be discontinued and that port shall be sealed. The injection nozzle shall be transferred to the next port and the procedure repeated until the crack is completely filled. Filling of small radiating cracks is considered as subsidiary obligation to filling prime cracks. On completion of the injection of the cracks, the adhesive shall be allowed to cure for sufficient time to allow removal of the seal without drainage of the adhesive material from the crack. The seal shall be removed or ground flush with the concrete surface.

4. *Virginia*—Structure No. 6265 on Rte. 628 over S.E. Ramp Rte. 581 was damaged by overheight collision. One facia girder was replaced. Two girders were damaged slightly on the bottom flange, and a third had one corner of the bottom flange broken. The triangular-shaped spall was 3½ in. (89 mm) by 11 in. (279 mm) with two strands severed and three strands exposed. Also there was a spall on the opposite face of the bottom flange 2½ in. (64 mm) deep by about 4 ft 6 in. (1.37 m) in length.

a. Care shall be used in removal of existing concrete to prevent damage to existing reinforcing steel bars which shall be thoroughly cleaned before placing new concrete.
b. Prior to placement of new concrete, surfaces shall be thoroughly cleaned and coated with an approved epoxy bonding compound.
c. Repair these three beams with pneumatically placed mortar.

5. *Washington*—Parallel bridges at Columbia Center Boulevard Interchange had all (12) girders in one span damaged by an overheight load. All bottom flanges were spalled ranging from minor areas to one area 5 ft 3 in. (1.60 m) long by 6½ in. (154 mm) deep extending up to the web. Prestress strands were exposed in four girders with one strand broken. Two girders experienced diagonal cracking with longitudinal cracks just below the top flange in the web approximately 20 ft (6.1 m) in length. Repair sequence was outlined as follows:

a. Remove all loose and unsound concrete. The broken strand in beam W-1 shall be trimmed so no wires protrude outside the lower flange and the wires shall be coated with epoxy resin.
b. Beams W-1, E-1, E-3, and E-6 (more extensively damaged girders) shall be repaired as follows, allowing for at least one lane of traffic on the bridge at all times. Place a 30-kip axle load as nearly as is practical over damaged area and at the same time place 30-kip axle load over the adjacent beam. The loads can be in the form of a dual-axle trailer properly loaded to produce a 30-kip load per axle. The loading and placing shall be as directed by the Engineer:
   (1) Cracks shown on the beam elevations shall be epoxy injected.
   (2) Place formwork as required.
   (3) Treat surfaces to be bonded with epoxy resin.
   (4) Place concrete in forms. Shotcreting may be allowed provided the contractor submits the procedure to the Engineer for approval.
c. Patching of other damages can be done in any sequence as approved by the Engineer.
d. After the concrete has reached 3500 psi strength, the two 30-kip axle loads shall be removed.

Severe Damage. The six repairs categorized as severe damage are as follows:

1. *Arizona*—One interior girder on Thomas Road Underpass suffered severe damage. The bottom flange of the girder was damaged for the entire width (1 ft 6 in.) to a depth of 5 to 6 in. (127 to 152 mm) over a length of about 8 ft (2.44 m). Two No. 4 reinforcing bars were damaged and two prestress strands (out of a total of 18) were severed. The following specifications detailed this repair:

a. Bent reinforcing bars shall be straightened and tied back in place.
b. The two severed strands shall be left in place.
c. Remove all damaged and shatterd concrete as directed by the Engineer. Extreme care shall be exercised in concrete removal so as not to damage prestressing strands. No impact tools will be permitted.
d. Restore girder cross sections to the original size and shape with an approved epoxy mortar.

2. *Connecticut*—A girder on I-95 westbound over Groton Reservoir was damaged during construction. This damage was repaired as shown in Chapter Two, splice 10. Significant repair procedures, in addition to those given in Chapter Two are as follows:

a. Nonpower tools, or power-actuated tools with the permission of the Engineer, shall be used in this work.
b. All rust, dirt, and loose concrete shall be removed from the concrete and exposed strands in the damaged area. Any deteriorated concrete in the damaged area shall be removed to a point where the concrete is sound and the strands are rust-free. Exposed prestressed strands that are broken shall be wired together as required to keep them in place during the placement of the epoxy mortar.
c. For bonding compound, epoxy grout, and epoxy paint use products manufactured by the Dural International Corporation, or approved equal.

3. *Ontario, Canada*—A facia girder on County Road No. 37 Underpass suffered the loss of four ½-in. ϕ prestress strands. A section of bottom flange concrete approximately 5 ft (1.52 m) long by 1 ft (0.3 m) wide by 5 in. (127 mm) deep was removed. Repairs to this girder were made by placing new strands between broken ends using splice chucks. The strands were heated to gain tension. Chapter Two, splice 6, gives additional details for repair.

4. *South Carolina*—A girder on Eagle Drive Underpass on I-26 in Charleston County was damaged by an overheight collision. The bottom flange and part of the web were extensively damaged, and 15 out of 58 prestressing strands were severed. Chapter Two, splice 11, gives full details. Prior to posttensioning, all concrete was replaced in stages using gunnite. There was no indication that preload was applied.

5. *Washington*—One facia girder and the first interior girder on the Columbia Center Boulevard Interchange structure suffered another extensive damage from overheight collision. The facia girder lost approximately 4 ft (1.22 m) of the bottom flange and about 2½ ft (0.76 m) of the web to a point 2 ft 9 in. above the bottom flange. Two prestress strands were severed, and two other strands suffered broken wires. The interior girder had a hole through the web appoximately 2 ft (0.61 m) square and one strand was severed. The following repair procedures were specified:

a. Remove all loose concrete in both beam webs and the bottom flange of the exterior beam. All unsound concrete shall be removed as directed by the Engineer. The concrete in the large diagonal exterior beam crack shall be completely removed 3 in. wide. This crack starts above and to the right of the hole and runs downward at about 45° for 2 ft. Care shall be taken not to damage existing stirrups, prestress strands, or sound concrete. The existing broken strands shall be coupled together and prestressed to a 6-kip load by a method approved by the Engineer. Strands which have some broken wires shall have the broken wires cut off and the ends coated with epoxy resin.
b. Place 30-kip loads as nearly as is practical over the damaged area of each beam.
c. Epoxy grout cracks and replace and straighten damaged re-steel.
d. After the concrete has reached 6000 psi strength, the preload shall be removed.

6. *Washington*—All six girders in one span on SR 5 Overcrossing No. 12/221 were damaged by overheight collision. The facia girder lost about 4 ft (1.22 m) of the bottom flange and suffered longitudinal cracks through the web of the flange to web interfaces for the full length between diaphragms. Six prestress strands were severed. One interior girder suffered extensive damage on one side of the bottom flange, without cracking in the web, and had five severed strands. Both of these girders were repaired by adding posttensioning. The posttensioning was accomplished by casting concrete corbels on top of the bottom flanges. Each corbel had three ½ in., 270-kip strands installed with a jacking load of 31 kips per strand. The strand elongation was specified and the final design posttensioning load per strand was 24.7 kips. Full details for anchoring the corbel concrete to the girder were specified. Preload was applied prior to placing new concrete and remained in place until the specified strength was achieved. The preload was removed prior to posttensioning the added strands. Splice 4 in Chapter Two shows details that are similar to those specified on the repair plans developed by Washington.

Three girders suffered shallow concrete damage, while the fourth girder suffered a rather extensive spall in the bottom flange with two severed strands. These four girders were repaired by replacing the lost concrete section. Repair sequence and specifications were as follows:

a. Remove all loose concrete. Unsound concrete shall be removed as directed by the Engineer. Broken prestress strands shall be cut off and their ends coated with epoxy resin.
b. Place 30-kip axle loads as nearly as practical over the damaged area of the beams. (Two locations for preload were specified due to extent of damage and to provide for traffic.)
c. Cracks shall be sealed and pumped with epoxy. Epoxy sealing and pumping shall be carried out with 30-kip axle loads in place.
d. Place concrete in forms on properly prepared surfaces using an epoxy bonding agent. The surface shall be coated with epoxy resin forming a 10 to 15 mil thickness. The epoxy surface shall appear shiny and shall be tacky just before new concrete is placed against it. If the concrete has absorbed the adhesive, as evidenced by a dull appearance, apply another coat. The new concrete shall then be placed while the epoxy remains tacky.
e. The 30-kip axle loads shall remain in place over the beams being repaired until the new concrete in the beams has attained a strength of 3500 psi. All beams shall have their bottom flanges restored to original section.
f. All flange and web repair shall be completed with preload in place. The preload shall be removed prior to posttensioning.
g. When corbel concrete has attained a strength of 5000 psi, strands shall be tensioned to specified load. After posttensioning is completed, the galvanized rigid thin wall prestressing conduits shall be filled with grout. (The jacking locations and sequence were specified on the plans.)
h. The design is based on a friction wobble coefficient, $K = 0.0002$, and the strands shall be anchored with an anchor set of 0.2 in. (The strand elongation was specified.)
i. After completion of beam repair and posttensioning, the exterior faces of the facia girders (full length of bridge) shall be sealed with pigmented sealer.

Washington's crack repair specification is as follows. All cracks shall be ground (or chipped) to a V-shaped cross section ½-in. deep along their entire length on both sides where cracks extend through. Holes of ¼-in. diameter and ½-in. depth below the bottom of the V-groove shall then be drilled on 16-in. centers along the cracks, with the first hole 4 in. from the end of the cracks and the holes on the other side of the beam staggered. Upon completion of all grinding (or chipping) and drilling operations, cracks and holes shall be blown clean with a high-velocity filtered-air jet. Extreme care shall be exercised to assure that cracks and drilled holes are open and not obstructed by dust or sand grains.

Short lengths of ¼-in. copper tubing (Zerk fittings or tubeless tire valves may be substituted) shall then be inserted in the holes and sealed in place with epoxy. In addition, epoxy shall be placed in all V-grooves to a level flush with the beam surface. All sealing epoxy in the V-grooves and around the copper tubes shall be applied with care to prevent leakage during subsequent pumping and shall be allowed to cure in accordance with the manufacturer's directions. The filler epoxy shall be mixed according to the manufacturer's recommendations and transferred to a pressure pot of at least 60 to 150 psi working capacity. From the pressure pot the epoxy shall be pumped into the beam through a fluid hose. The fluid hose shall have appropriate fittings on one end to attach firmly to the copper tubes. The fluid hose shall be equipped with an insert of clear plastic or glass tubing so that the possibility of pumping air rather than fluid may be observed. If necessary, the pressure pot shall be thoroughly surrounded with crushed ice to delay the generation of exotherm, which at 80 F would come up in 20 minutes. Only those quantities of filler epoxy which can be transferred in 20 minutes shall be mixed at one time.

Pumping shall commence at the valve stem located at the end of the crack and shall continue until epoxy emerges from the corresponding valve stem on the other side. Low transfer pressure (approximately 15 psi) shall be used in the beginning, and as confidence in the structural strength of the beam concrete and epoxy sealing paste is developed, pressures can be increased as required. Other valves located along the crack shall be kept open (without valve cores or caps) to allow observation of the flow of fluid from the pumping location. When epoxy emerges from a valve, it shall be closed by pinching and bending the copper tubing, and the pump moved to the next valve stem indicated by the travel of the epoxy.

After all the valve stations in any one location have been pumped full, the filler epoxy shall be allowed to cure without disturbance for 24 hours at 70 F–90 F or longer if the ambient temperature is lower. After the filler epoxy has been allowed to cure completely, the epoxy sealing paste and the valve stems shall be ground flush with the original concrete surface. Supervision of this process by the manufacturer's representative shall be required until the contractor is familiar with the products and the operation.

The sealing epoxy shall be Furane Plastics, Inc., Epibond 150/947, or an approved equal Thixotropic epichlorohydrin-based epoxy compound, capable of sealing cracks and valves.

The filler epoxy shall be Furane Plastics, Inc., Epocast 530/9816, or an approved equal epichlorohydrin-based compound with the following physical properties:

(a)	Pot Life	20 minutes minimum at 75° F in one-gallon quantities.
(b)	Solid Content	98% minimum
(c)	Viscosity at 75°–80° F (Brookfield)	200 c.p.s.-700 c.p.s.
(d)	Ultimate Compressive Strength	12,000 psi (ASTM D-695)
(e)	Ultimate Flexural Strength	10,000 psi (ASTM D-790)
(f)	Color	Clear and Colorless

The epoxy crack sealing procedure outlined herein is an approved method for accomplishing the work. However, the contractor may, upon approval of the engineer, use other approved equipment and procedures.

The following information with regard to the repair of the SR 5 Overcrossing No. 12/221 was obtained from Washington State's "End of Project Report." This report includes information reflecting construction changes that were recommended by the contractor and approved by the State:

a. A material called "Set 45" was approved for restoring the bottom flange concrete. This material greatly reduced the necessary preload time to obtain the specified 3500 psi. Concrete was still required to be used for the posttensioned section.
b. The contractor proposed a method of crack repair that used plastic injection ports on 6 in. centers along the cracks. The holes were drilled with hollow bits with vacuum attachment in order to remove the dust and the ports sealed in. The epoxy was pumped through these ports with an epoxy injection pump that mixed components and provided heat at the nozzle. This process eliminated problems with pot life and worked very well.
c. In summary, the contract appeared to very successfully accomplish the repair of damaged prestressed beams in place with very little disturbance to traffic.

Repairs Performed by Illinois and Texas State Forces

Illinois and Texas transportation departments described procedures they used on work done by their personnel. These details are not included in the evaluation results in Chapter Two; however, they describe some different techniques used in repair of damaged girders. Attention should particularly be directed to the method Illinois describes for anchoring repair concrete to existing surfaces. This technique is applicable to all work that requires patching.

1. *Illinois*—A bridge on FAI Route 57 in Pulaski County suffered minor damage to 7 girders and moderate damage to 1 girder. The moderate damage consisted of a large spalled area on the impact side of the bottom flange of the girder. There were several exposed tendons, but no tendons were severed. A bridge on FAI Route 57 in Jefferson County suffered similar moderate damage with extensive spalls on both faces of the bottom flange. The repair of these damages was accomplished by state forces using the following procedures:

a. The moderately damaged beams were preloaded with a 72,000-pound truck at the center of the span adjacent to the curb, prior to patching. The preload shall remain in place for a minimum time or until the new concrete has obtained a specified strength.
b. The damaged area of the beam shall be cleaned of all loose and spalled concrete by using a hammer drill or light-duty pneumatic hammer. Extreme care shall be used not to damage the exposed strands. The exposed portions of the strands shall be sandblasted.
c. Using the same tool as in step b, remove the existing concrete to good sound concrete along the edges of the damaged area to a depth of 1 in. (25.4 mm) minimum.
d. Power-driven ⅜-in. (9.5 mm) pins shall be placed at 12-in. (305 mm) centers and approximately 4 in. (102 mm) from vertical surface across the top and 3 in. (76 mm) up from the bottom of the beam. Place 1 in. by 1 in., 18-gage welded wire fabric in the repair area, and attach it to the pins and/or strands with wire ties. The welded wire fabric shall be ½ in. below the finished surface of the new concrete and the beam shall be rebuilt to its original dimensions.
e. The patches were made with high-strength mortar or special concrete with slump less than 3 in. and ½-in. maximum coarse aggregate. Place the lower form on the bottom of the girder and compact by vibrating the concrete mix into the voids. Vertical forms shall then be placed and the remaining voids filled and compacted. The sloping upper surface shall be trowelled.
f. Minor damage areas shall be cleaned and sealed with two coats of penetrating sealer. (See Fig. A-1 for details.)

2. *Texas*—One girder on a heavily travelled interstate route lost about 10 ft (3 m) of the bottom flange and a large portion of web. No prestressing strands were broken. Unsound concrete was removed and the girder was restored to its original configuration by gunniting. Forms were placed on the back side and the gunnite material was placed in three lifts. The exposed faces of the web and bottom flange were shaped by hand. This work was done by state forces and was not considered a structural repair.

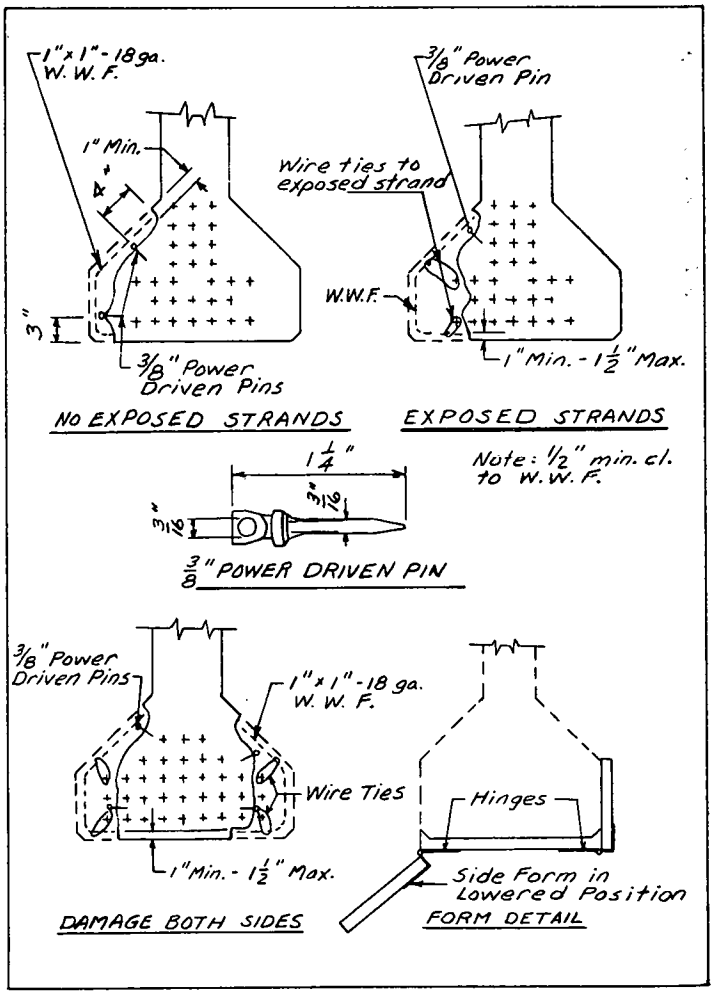

Figure A-1. Illinois patching details.

Damage Caused by Fire

Contract plans for repair of PCB damaged by fire were received from Louisiana and Texas. Louisiana submitted plans for two projects, and Texas submitted plans for one project. These repair plans used the original construction plans, and additional plan sheets were prepared to the same quality. The following is a general description of damage, with significant information and specifications required by these transportation departments:

1. *Louisiana*—One PCB girder and one column on the LA. 1053 Overpass suffered fire damage. Typical corner spalling of the girder was shown. The specified repair procedures were as follows:

a. Clean all girders and deck areas by sandblasting to remove all smoke and fire stains. Remove all unsound concrete from column and cap using pneumatic hammer not greater than 15 pounds. Remove all unsound concrete from girders using hand tools. Clean all exposed reinforcing steel before placing concrete.
b. Repair column, cap, and girder by using epoxy grout, pea gravel mix, or shot-crete concrete. A special surface finish will be required on all repaired surfaces, and shall comply with the qualified products list.

Materials for patching concrete are as follows:

a. Rebuilt areas over 1 in. (25.4 mm) thick: After final preparation and cleaning, the damaged area will receive an application of Sika Chemical Corporation's, "Colma Fix," adhesive or approved equal in accordance with the applicable requirements of AASHTO designation, M 200-65, Type A. While the adhesive is still tacky to touch, patching material will be applied.

   Patching material will be made of one part cement, three parts sand, two to five parts water and a solution of one part Sika Set, or approved equal. On large areas to be patched, the contractor shall use temporary forming until the initial set is reached. All patches will be wet cured.
b. Rebuilt areas under 1 in. (25.4 mm) thick: After final preparation and cleaning, the damaged areas will be patched with Colma Dur Gel Mortar, or approved equal, in accordance with the applicable requirements of AASHTO designation, M 200-65, Type B. Mortar shall be trowelled on the surfaces in layers, but in no case shall the depth exceed 1 in. (25.4 mm).

2. *Louisiana*—A major fire damage occurred at Pawnee Street on the Baton Rouge Interstate Route. This damage was repaired by total replacement of 23 girders and two bents and partial reconstruction of one bent. Structural steel falsework bents were used to support and raise the girder spans a maximum of 2 in. (51 mm), while the bents were reconstructed. The falsework bents were placed on the existing footings, and the falsework columns and bracing were used to support the required steel column forms. The footing dowel steel was straightened and lapped full length with the new column steel.

3. *Texas*—Fire damage occurred on the Entrance Ramp to South End of Harbor Bridge, Structure No. 52, on I-37 and Carancahua Street in Corpus Christi, Texas. The fire was caused by an overturned tank truck carrying crude oil. Oil was spilled on three spans, ran through deck joints, and ran down a gutter causing underside damage in two more spans. Substructure damage consisted of spalled concrete to spiral and vertical reinforcement of columns, caps spalled on corners to the corner steel, and some surface spalls approximately 1 in. (25.4 mm) deep. There was a loss of about 25 percent of bearing area under neoprene pads at eight locations. All substructure damage was deemed repairable. Prestressed girders in five spans were damaged with some damage to end diaphragms at three bents. Portions of prestressed girders had bottom corners spalled completely exposing corner strand, and the strand above and the adjacent strand exposed. Surface spalling of less than 1 in. (25.4 mm) occurred on the bottom of roadway slabs in five spans. At one point in the slab there was a 3-ft by 3-ft spall to the bottom mat of steel. The superstructure damage was deemed repairable, and following the inspection the structure was opened to regular traffic. The damage report was in letter form. Significant specifications for repair work are as follows:

a. The edges of all patch work shall be cut approximately perpendicular to the existing concrete surface. These cuts shall have a depth of approximately ½ in. (13 mm) minimum, or as approved by the Engineer, to prevent feather edges.
b. All corner areas requiring concrete patching were drilled for No. 3 deformed reinforcing bars. The dowels were epoxy embedded, and No. 3 longitudinal reinforcing bars were placed for the length of the patch with a minimum concrete cover of 1 in. (25.4 mm). The cap bearing areas were reinforced with 12 by 3 channels. (See Fig. A-2 for details.)

Present Methods of Repair—Replacement Plans

Plans and specifications for the replacement of damaged girders were received from Arizona; California; Florida; Iowa; Louisiana; Minnesota; Montana; Ontario, Canada; Texas; Virginia; Wisconsin; and Washington transportation departments. These plans, for the most part, are construction plans prepared for public advertising, with the work to be performed by bridge contractors. Some replacement projects have been accomplished with transportation departments working jointly with the girder manufacturer, on a negotiated agreement basis. Some departments of transportation have established agreements with girder manufacturers by which they are able to achieve early delivery of replacement girders. This procedure is normally used only when conditions dictate immediate action, and removal operations would be performed during the same time as girder replacement manufacture.

Most Common Replacement Method

The most common method to replace a damaged girder is to remove portions of the roadway slab and diaphragms, allowing the girder to be lifted up and out of the structure. Sufficient length of reinforcing steel is required to be left in place, extending from the slab and diaphragms, to provide lap requirements. Prior to concrete removal, sawcuts are made in the slab to obtain good break lines in sound concrete.

Twenty departments of transportation indicated that

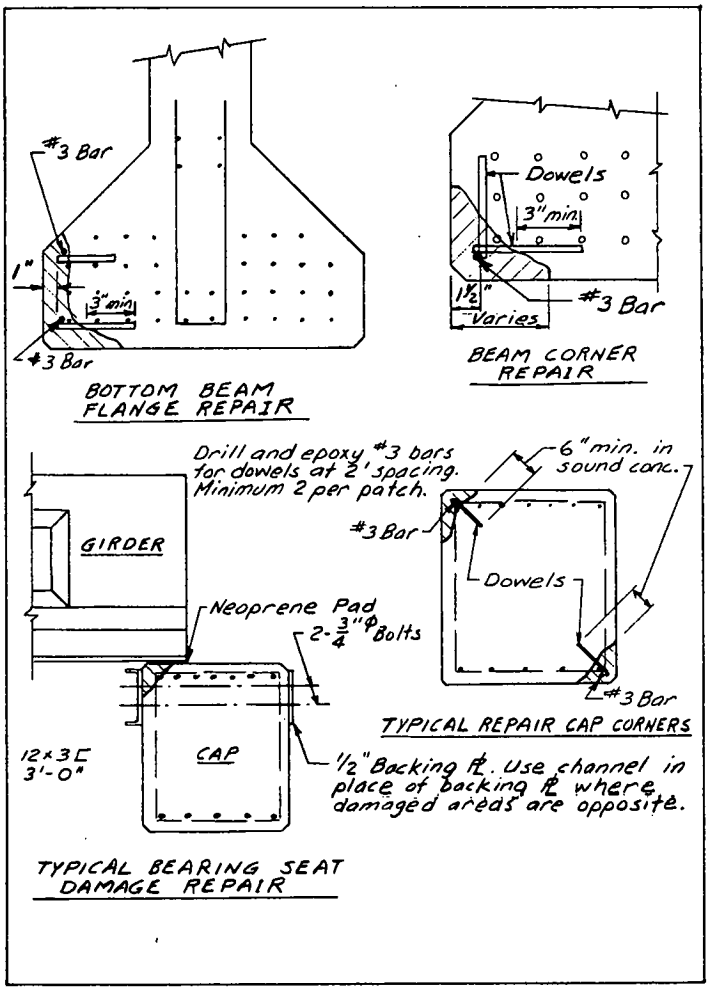

Figure A-2. Texas fire damage repair.

they replace in-kind when PCB girders are replaced. Maryland advised that one concrete girder was removed and replaced with a steel beam. Louisiana replaces in-kind and also replaces some with current AASHTO standard design. Texas advised that replacement girders are designed to conform to the existing structure.

All plans reviewed during this research make reference to traffic requirements, protection to the structure, safety considerations, and location of concrete removal in the performance of the work. Some departments of transportation include rather specific details regarding these items, while others provide parameters that are to be followed by the contractor and approved by the agency.

The majority of plans and specifications require the use of conventional falsework during the removal operations. The falsework is required to be designed and constructed to safely carry the imposed loads, and where not specifically detailed on the plans, the contractor's plans are generally subject to approval by the agency. Plans and specifications generally include provisions for protection to the public from the work. These provisions include netting, tarpaulins, and wood and metal coverings to ensure that debris will not come in contact with any travelled way. All agencies require the temporary closure of the highway below during removal and replacement of girders. The following compilation is a summary of specific information gained from review of plans and specifications and from meetings with various departments of transportation regarding girder replacement methods and procedures. This summary includes information that was somewhat unique to the agency and is included for other agencies' consideration:

1. *Arizona*—

   a. Extreme care shall be exercised in removal of the girder due to high internal forces.

2. *California*—

   a. Roadway slab bars may be extended 6 in. minimum from the removal line and the new reinforcing steel may be butt welded.
   b. The amount to be paid for removal was limited to a specific amount until final completion and approval of the work. This should preclude unbalanced bidding.
   c. Explosives shall not be allowed in the removal process.
   d. Replacement-in-kind allows use of 270-kip prestress strand.

3. *Florida*—

   a. Plans normally require the roadway slab to be removed along the centerline of the adjacent girder. They find it difficult to obtain a satisfactory sawcut to the underside of the slab. This results in excessive spalling and breaking of sound bottom slab concrete when the joint is between girders.

4. *Iowa*—

   a. Their plans include specific details and placement of falsework bents.
   b. Construction equipment on bridge shall be rubber-tired, not exceeding 9 tons in weight.
   c. New girders shall be at least two weeks old prior to new slab pour.
   d. On one job the replacement girders were purchased by Iowa and furnished the contractor doing the work.
   e. One plan required falsework support to be placed prior to cutting the slab due to the extensive girder damage.

5. *Minnesota*—

   a. They have taken elevations of the structure prior to and during replacement operations.

6. *Montana*—

   a. Plans require flagmen for 48 hours following curb and diaphragm concrete placement, and 72 hours following slab concrete placement. Speed is restricted to 5 mph during these periods.

7. *Ontario, Canada*—

   a. Their replacement plans include the applicable original construction plans for information.

8. *Texas*—

   a. Replacement girder design conforms to the existing structure.

b. Plans detail the bracing requirements for new girders during erection and construction.
c. They install protective steel angles on girders above travelled roadways.

9. *Washington*—

a. One plan required the release of prestress in the new girder to have occurred a minimum of 30 days prior to placement of roadway slab concrete.
b. One plan required no traffic on structure until slab concrete attained a strength of 2000 psi. Traffic was then restricted to a distance of 15 feet until a strength of 4000 psi was attained.

Plans reviewed indicate that the cut line for the removal of the damaged portion is either made at the centerline of the girder that is left in place, or at approximately the quarter point of the roadway slab span away from the girder that is left in place. More plans indicated removal at the quarter point of the span, although not by a significant number. Sawcuts ½ in. (12.7 mm) to ¾ in. (19 mm) deep are normal.

Several respondents voiced concern regarding replacement of girders from the standpoint of safety. These concerns dealt with the obvious dangers to workmen in removing and replacing girders. This consideration could be a factor whether to replace or to repair-in-place.

All plans and specifications reviewed describe the required work in a sufficient manner. However, some plans contained features that should be noted. Iowa, Louisiana, and Texas plans for replacement of girders all were prepared in a uniform and concise manner. Plans prepared by these departments of transportation use original construction plans and/or plans similar to the original plans. Where original plans are used, details for replacement construction are clearly defined by appropriate notation. Ontario, Canada, includes the original construction plans with the replacement plans. The replacement plans are prepared in the same format and quality as the original.

Iowa plans include specific details showing the construction and location of falsework bents when required. The falsework bents are located at the point where the girder is to be cut for removal. Removal is normally accomplished in two stages. The falsework bent is constructed so half of it is moved for the second stage removal. This allows for maximum movement of traffic while the removal is being accomplished. The falsework bent that remains in place through both stages of construction is sheathed with plywood to serve as a barrier between removal operations and the traffic lane. Upon removal of both sections of the damaged girder, the falsework bents are removed. Figure A-3 shows this method of conventional falsework support, which also provides for traffic use and protection.

Other Replacement Methods

1. *Minnesota*—The Minnesota transportation department furnished information and plans showing the replacement of damaged girders by removal and replacement from underneath the roadway slab. They have replaced one facia girder and one interior girder by this technique. One of these replacement projects was described in the *PCI Journal* (*16*).

The facia girder was approximately 75 ft (22.86 m) in length. The 45-in. (1143 mm) AASHTO girder had a modified depth of 43¾ in. (1111 mm). The depth was modified to facilitate placement. The roadway deck and diaphragms were removed a distance of approximately 3 ft (0.91 m) from the curb line toward the centerline of the bridge. The removal was accomplished leaving the slab steel in place. A ½-in. (12.7 mm) sawcut was made in the top of the slab along the lines for concrete removal. Two 36 WF 150 longitudinal steel beams were placed to support the damaged beam and the overhanging curb and rail section. The support of the overhanging section and also the provision for possible necessary adjustment of this section were accomplished with transverse beams placed at intervals on the longitudinal beams. Adjustment was accomplished by torqueing the bolts used to tie the support system together. The support for the overhanging curb and rail section was made through the concrete rail section. A representative of the Minnesota transportation department advised that the rail on his bridge was designed for heavy loading. Their calculations showed sufficient strength in

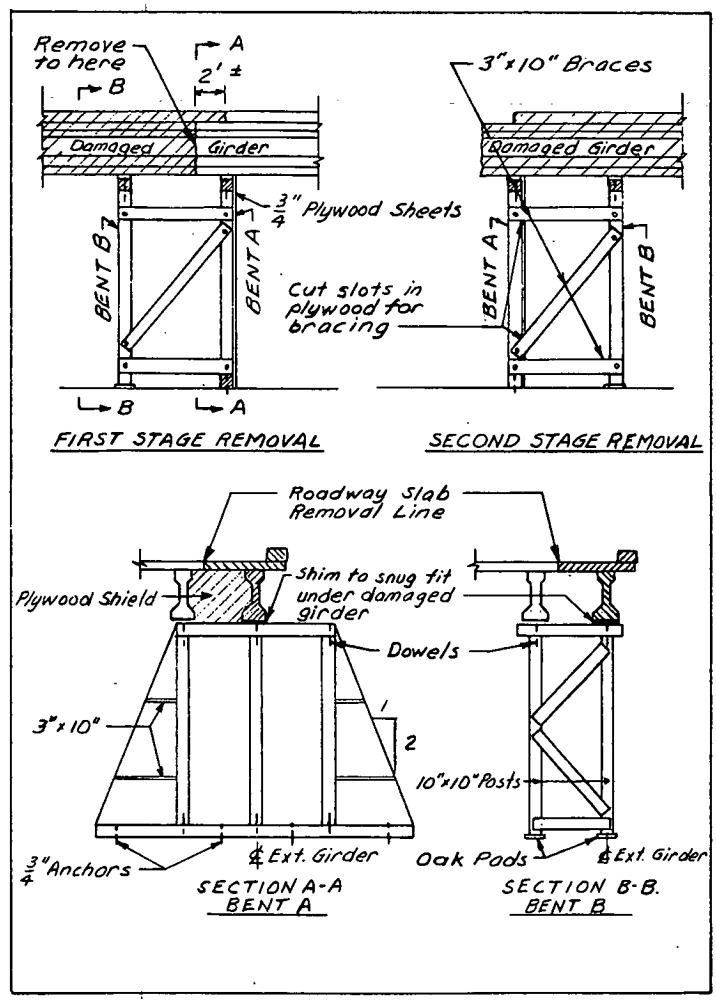

Figure A-3. Iowa falsework plan.

the rail system to sustain the applied loads. The highway under this structure was closed to traffic approximately 45 minutes for placement of the new girder. Details of this replacement method are shown in Figure A-4. Figures A-5, A-6, and A-7 are photographs furnished by Minnesota DOT showing the various stages of work. Following are repair procedures for this project as furnished by the Minnesota transportation department:

a. Take elevations on top of curb at face of rail and on roadway slab 5 ft (1.52 m) from the gutter line. These elevations will be checked and maintained during construction.
b. Make sawcuts in slab along the lines indicated, being careful not to cut the reinforcement bars.
c. Install supporting system as indicated.
d. Remove concrete as shown, being careful not to damage the reinforcement.
e. Remove damaged girder and place new PCB girder. Lifting points should be within 4 ft (1.22 m) of the ends of the beam.
f. Place concrete.

The interior girder replaced by this method was 62 ft (18.9 m) in length. The 36-in. (914 mm) AASHTO girder was modified at each end with a taper of 3 in. (76.2 mm) in 3 ft (0.91 m) along the top flange. This modification was required to allow placement. The bridge and the highway below were both closed to traffic as required. Conventional type falsework was constructed on the curb side of the damaged girder to support the structure during removal and reconstruction. A transverse steel beam was placed on the bridge deck to support the damaged beam during removal, in addition to post support from the ground. A width of roadway slab of approximately 12 in. (305 mm) was removed directly over the damaged girder. All deck reinforcement, with the exception of a minimum amount of bottom transverse steel, was left in place. The diaphragms were removed for a length of 3 ft 3 in. (0.99 m). Once work started, all repairs were completed in 12 working days. Details of this replacement method are shown in Figure A-8. Figures A-9 and A-10 are photographs furnished by Minnesota DOT showing various stages of the work.

The girders for both of these replacement projects were fabricated without shear devices projecting from the top flange to facilitate placement. Since composite action was required, steel plates were cast in the top flange to which shear studs were field welded. Both projects were constructed by state forces doing the majority of the work. By negotiated agreement, a prestressed girder fabricator furnished the heavy equipment and personnel to remove the damaged girders and place the new girders. The reason for removing from below was one of expedience and was not design related. The amount of structure removal was reduced, and it was believed that this procedure would be cost-effective.

2. *Florida*—In one instance, a facia girder was replaced with a precast section consisting of the girder, roadway slab, and curb being cast integrally. An 18-in. (457 mm) gap was provided for the cast-in-place closure pour. Plans are not available for this construction, so prestressing procedures are unknown. A representative of the Florida transportation department advised that camber requirements required close control. This control was probably the responsibility of the fabricator to ensure a minimum differential vertical offset at the closure pour. This innovative method of replacement was used for speed of repairs and thus reduced inconvenience to users of the facility.

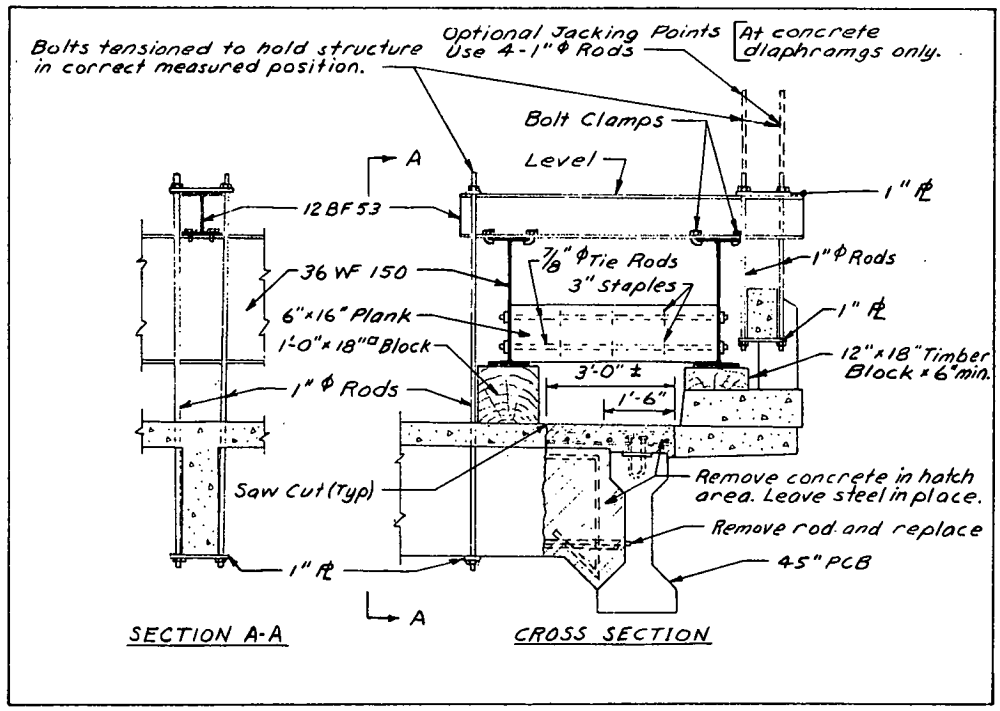

Figure A-4. Minnesota facia girder replacement.

Figure A-5. Facia girder replacement: (top) deck support system; (bottom) falsework support. (Courtesy of Minnesota DOT)

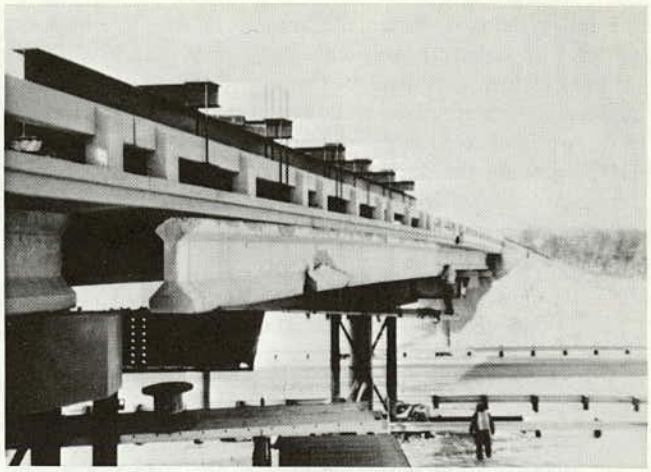

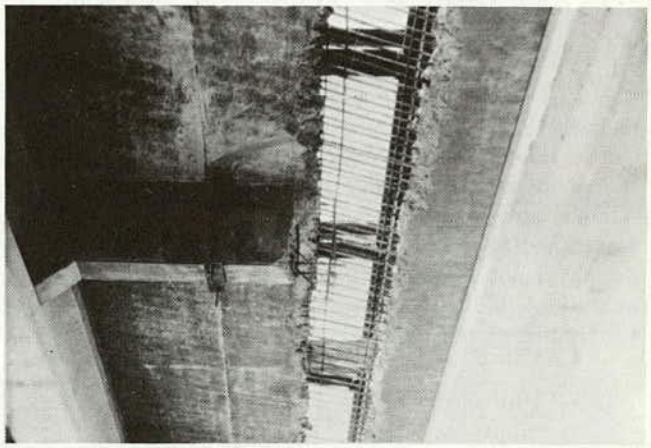

Figure A-6. Facia girder replacement photos: (top, bottom) damaged girder removed. (Courtesy of Minnesota DOT)

Comments on Durability of Repairs

In general, agencies simply reported that the durability of repairs was good. Specific comments by state transportation departments were as follows. Mississippi reported that the durability of epoxy grout for surface damage was excellent. Louisiana reported that they consider the durability of their repair methods to be equal to the design life of the structure. California reported that some cosmetic repairs have not been entirely successful. Arizona considers repair of cracks to be good. They have noticed that if a girder is redamaged, the new cracks will generally appear in a different place from the repaired crack. Utah reported that most repairs have been cosmetic and durability has not been a problem. Illinois reported that a stainless steel plate covering a patch held moisture and the epoxy did not cure. The plate was removed and the epoxy mortar replaced. Two similar plates were holding successfully. They have reported recently that the use of these stainless steel plates has not been as effective as desired, and they have discontinued their use. Pennsylvania reported a belief that epoxy joints will open up after 8 or 10 years if they are subject to tensile strain. More than one state reported that thin patches were less durable than thick patches that engaged reinforcing steel. One or more states regard patching as "cosmetic" in nature (not adding to the structural strength of the member). However, it was believed that patching did inhibit corrosion for an indefinite period of time. The Atchison, Topeka and Santa Fe Ry. Co. reported that they have had no recurring problems when the cause of damage was eliminated. However, they believed that the time period (less than 15 years) did not allow a good durabilty evaluation.

Proceduers Used to Verify Effectiveness of Repair Methods

Several states reported that they took horizontal and ver-

tical measurements as one means of verifying repair methods.

All agencies reported follow-up inspections. The schedule of these inspections varied widely from continuous monitoring to once each 2 years. There was reasonable correlation between repairs that should have frequent inspection and cosmetic repairs that do not require continuous monitoring.

FABRICATION, STORAGE, AND CONSTRUCTION DEFECTS

Nearly all agencies that completed information requests reported defects. In addition, five prestressed concrete girder manufacturers (one in Louisiana, one in Texas, one in Oregon, and two in Washington) were personally visited to gain their input regarding defects. Inquiries reveal that many manufacturing plants are Prestressed Concrete Institute certified plants. If agency specifications do not control, these plants use the PCI Manual for Quality Control as a guideline. The limited research in this area does not indicate a necessity for being PCI certified. Concrete Technology Inc., of Tacoma, Washington, has developed its own Quality Control Manual.

Inspection Responsibility

Agency Comments

The offices reported to be responsible for inspection of prestressed concrete bridge members prior to bridge completion were as follows (the numbers represent the number of responses):

Office	Always	Sometimes	Never
Materials Engineer	23	4	3
Construction Enineer	15	10	4
Bridge Engineer	5	20	3

Manufacturers' Comments

Inspection may vary depending on whether girders are being made for a federal, state, county, or city agency. The state transportation department has an inspector who is always present during manufacture of state girders. The inspection for other agencies varies from having their own inspector, using a commercial inspector, to not having an inspector. If the agency does not have an inspector, the manufacturer certifies that the girders meet specifications.

The manufacturers were nearly unanimous in stating that they believe the state transportation department inspector to be the best qualified of any agency inspector. They also expressed the belief that the state transportation department inspector could do additional inspection for other government agencies.

Although the appeal process may vary, all manufacturers have the right to appeal to some higher agency authority other than the agency inspector, prior to final girder rejection. The most significant complaint about inspection was "An inexperienced inspector can hold up production due to a small defect that is normally approved."

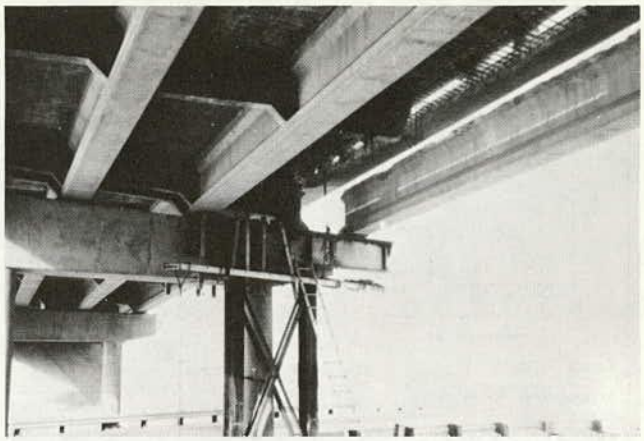

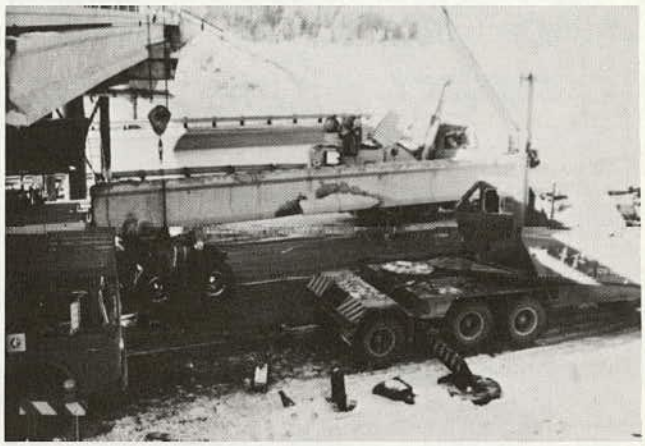

Figure A-7. Facia girder replacement photos: (top) damaged girder removed; (bottom) damaged and replacement girders. (Courtesy of Minnesota DOT)

Recommendations

It is suggested that all agencies review their inspection practices. The goals should be to provide efficient inspection and ensure that the quality of the product is in accordance with plans and specifications.

Concrete Defects and Repair

Agency Comments

The vast majority of defects are relatively minor (i.e., spalls, rock pockets, and hairline cracks). The number of girders per agency having this type of defect was estimated from "a very few" to 30 percent of production.

Typical methods of repairing these defects are the following: patching with epoxy mortar or concrete mortar applied to epoxy-coated surfaces, minor cracks sealed with epoxy; mortar patching after areas are chipped to sound concrete, final finish by burlap bagging or stone rubbing, and epoxy injection. The Washington State Department of

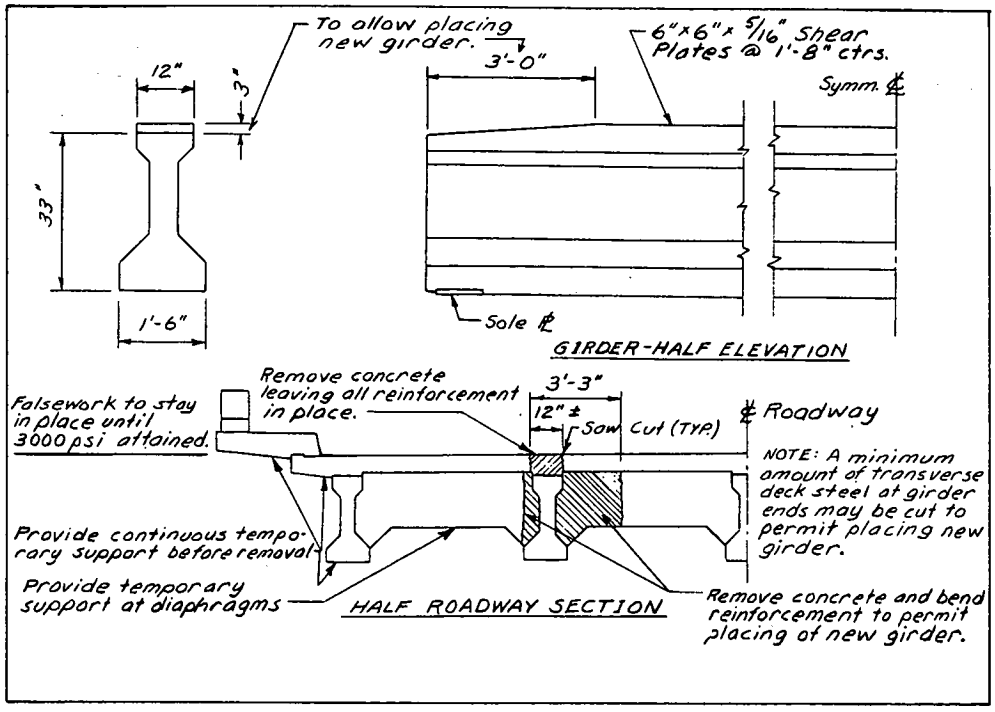

Figure A-8. Minnesota interior girder replacement.

Transportation requires patching prior to release of prestress. At least two state transportation departments (Texas and Washingon) have written inspector guidelines. The Minnesota State Department of Transportation has a sheet entitled "Standard Repair Procedure" for prestressed girder patching.

Manufacturers' Comments

Interviews with manufacturers substantiated agency comments regarding the repair of concrete defects.

Recommendations

Repairs in precompressed areas are of some concern. The findings of this study indicate that most agencies permit these repairs after the release of prestress. This means that the concrete in the repaired areas will not be in compression and may crack with the application of additional dead and live loads. Unless the depth of defect is very superficial, this practice could lead to moisture penetration, corrosion of prestressing elements, and reduced structure life. An alternate means of restoring compression after release of prestress is by the use of preload. (See Chapter Two for details.)

Horizontal Misalignment

Agency Comments

A number of states reported horizontal misalignment (lateral bow) during manufacture or construction. Many states use the industry tolerance of under 40 ft (12.2 m) in length ±½ in. (12.7 mm), 40 to 60 ft (12.2 m to 18.3 m) ±¾ in. (19 mm), over 60 ft (18.3 m) ±1 in. (25.4 mm). The Washington State Department of Transportation limits the maximum horizontal misalignment to ¼ in. (6.4 mm) per 10 ft (3.05 m) of length at any time, but the maximum amount allowed at final placement shall be not more than ⅛ in. (0.4 mm) per 10 ft (3.05 m) of length.

The state departments of transportation of Texas, Ohio, Mississippi, and Washington permit straightening by pulling into allowable alignment. The use of corrective external forces is subject to approval by the engineer. The girders must be held within allowable alignment until finally secured in the bridge. The state departments of transportation of Utah, Oklahoma, Michigan, Arizona, Connecticut, North Carolina, Wisconsin, Kansas, and New Mexico have stated that they have or would reject girders that have horizontal misalignment greater than allowable industry standards.

Manufacturers' Comments

The majority of manufacturers visited had experienced lateral misalignment. They considered the allowable tolerances as being reasonable. The reasons given for the cause of lateral bow varied, and were as follows: prestressing strands not following the centerline of girders closely enough; sunlight on one side of the girder which, if allowed to go uncorrected, would cause permanent set; and curing procedures that allow a large temperature difference on opposite sides of the girder. One manufacturer stated that they had not had initial lateral bow since they started using

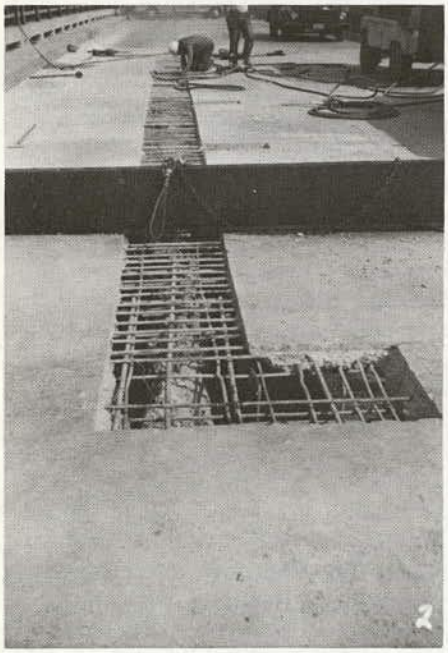

Figure A-9. Interior girder replacement photos: (top) falsework supports; (bottom) slab removal and transverse beam. (Courtesy of Minnesota DOT)

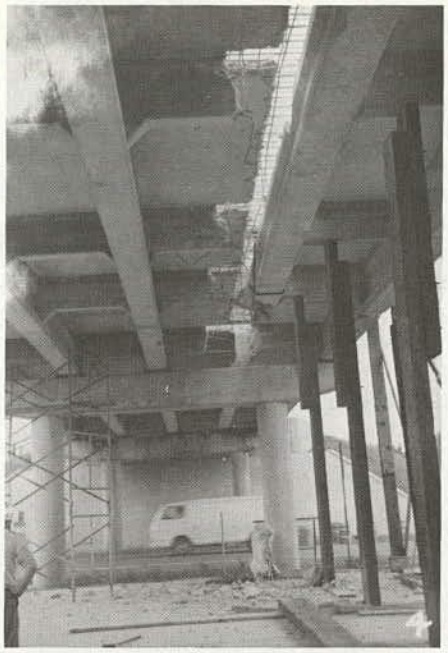

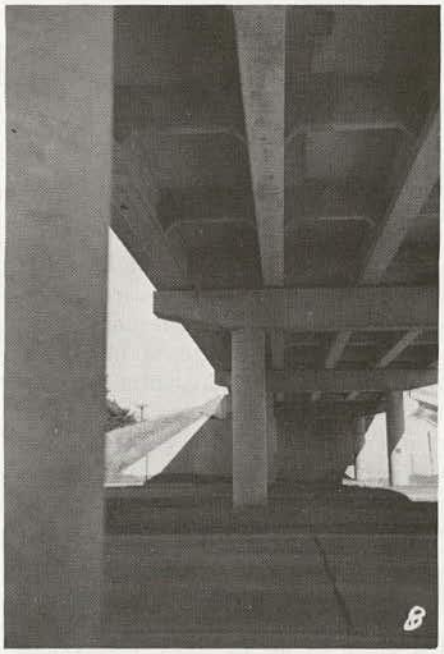

Figure A-10. Interior girder replacement photos: (top) partial girder removal; (bottom) completed replacement. (Courtesy of Minnesota DOT)

electric curing. Improper storage that allows the girders to tilt slightly may cause lateral bow. The Washington State Department of Transportation has made a brief curing temperature study that does appear to tie large differential temperatures on opposite girder sides to lateral curvature. Differential temperatures of approximately 15 F appear tolerable.

The methods for correcting lateral bow also varied. One manufacturer checks the girders in the storage yard visually on a regular basis, and any girder with lateral bow is shimmed under one side to bring it back to straight. Another manufacturer uses the same method of correction, but visually checks the girders on an irregular basis. At least two manufacturers have used bracing between girders during storage and even jacking to correct or minimize lateral bow. One manufacturer is purchasing new forms with a better form release method, which should correct the problem of strands not following centerline of girders.

Recommendations

The conclusion reached during this study is that all of the reasons given for the cause of horizontal misalignment are plausible. In some instances there may be a combination of causes.

The preferable method for correcting excessive horizontal misalignment is prevention. Girders should be stored on firm supports; if necessary, girders should be stored in a north to south position; large differential temperatures on opposite sides of the girder during curing should be avoided; and strands must be accurately placed with respect to centerline of girder.

Shimming under one side of girders during storage to eliminate or reduce lateral misalignment is an acceptable method. The girders should be checked regularly to avoid large corrections.

The use of external force to pull girders into proper alignment should be a "last resort" correction. It is difficult to calculate the stresses induced. The misalignment deformations are partially elastic and partially inelastic. The external forces will induce elastic stresses that are only partially reduced by inelastic behavior. The use of external force will produce flexural stresses that reduce compression on one side of the bottom flange. The reduction in compression increases the probability of cracking under the application of additional dead and live loads.

Twist (Rotational Misalignment)

Agency Comments

Several state transportation departments reported having had rotational misalignment problems. Texas recalled one instance where several girders were twisted. Only two of the girders were successfully straightened by blocking in the plant with pressure. Washington has had a recent experience where several deck bulb-tee girders were twisted. The problem was corrected in the field by pulling adjacent flanges into line with external force. Points of maximum stress were carefully observed to ensure that no cracking resulted. Pennsylvania had a twisting problem that corrected itself when the girder was set in final position in the bridge. Illinois reported a girder twist that was modified by shimming the bearing. Michigan reported that twist generally meant that repair of the casting bed was necessary. The Atchison, Topeka and Santa Fe Ry. Co. reported solving a twist problem by adjusting the elastomeric bearing pads set in mortar when the girders were erected. The state transportation departments of Utah, Oklahoma, Arizona, Connecticut, Kansas, North Carolina, Wisconsin, and New Mexico reported that they had or would reject girders that were twisted beyond industry standards.

Manufacturer's Comments

Rotational misalignment is considered a rare problem from the manufacturers' view. The manufacturer of the girders that the state transportation department of Washington had a problem with believed that the probable cause was incorrect form alignment during manufacture.

Recommendations

The preferable method for correcting rotational misalignment is prevention. Forms should be carefully aligned. Storage supports should be firm and in proper alignment. Rotational misalignment is difficult to observe during storage and is not usually noticed until placement in the field. Rotational misalignment is most critical for wide-flange girders that connect to each other. Girders that have cast-in-place decks can usually have their bearings adjusted slightly to compensate for minor twisting.

The use of external force should be a "last resort" correction. Twisting a girder into proper alignment induces both torsional shear and flexural bending stresses. These stresses are difficult to calculate. Even though the girders are not twisted to the point of cracking, tensile stresses are induced that increase the probability of cracking under the application of additional dead and live loads.

Mislocation of Prestressing Strands

Agency Comments

The state transportation department of Texas has stated that they have used external force to straighten girders with mislocated strands. The girders must be held in a straight position until they are secured during erection. If the process is not successful, the girders are rejected. The state transportation departments of Pennsylvania, Illinois, Utah, Oklahoma, Michigan, Indiana, Arizona, Connecticut, North Carolina, Wisconsin, and New Mexico stated that they have or would reject girders with mislocated strands. The state transportation department of Mississippi reported having accepted approximately two girders per year with slightly mislocated strands. The girders were accepted only after a design investigation proved that the mislocation had a minor effect. No calculations were available.

Manufacturers' Comments

None.

Recommendations

The preferable method for correcting problems resulting from mislocated strands is prevention. Strands must be located accurately with respect to forms. The use of external force should be a "last resort" correction. Stresses induced are difficult to calculate. The tensile stresses that are induced increase the probability of cracking under the application of additional dead and live loads.

Mislocation of Mild Steel Reinforcing

Agency Comments

The state transportation department of New Jersey reported 12 instances of improper concrete cover of reinforcing steel. The girders were repaired by adding 1-in. epoxy mortar coating. The state transportation department of Washington will permit short projecting reinforcing bars to be extended by welding. In addition, two missing projecting strands will be allowed per girder. The strands are re-

placed by reinforcing bars imbedded in the girders. Details are given in their "Standard Procedure for 'Type I' Repair of WSHD Prestressed Concrete Girders." The state transportation department of New York will permit minor amounts of reinforcing steel to be embedded and grouted.

Manufacturers' Comments

None.

Recommendations

Based on the results of this study, the conclusion is that mislocation of mild steel reinforcing is not a serious problem. The repair practices appear to be adequate.

Mishandling

Agency Comments

The state transportation departments of Pennsylvania, Washington, Utah, Oklahoma, New Jersey, Michigan, Minnesota, Ohio, Oregon, Indiana, Louisiana, California, Connecticut, North Carolina, Kansas, New Mexico, and Ontario (Canada) have reported mishandling defects. The Atchison, Topeka and Santa Fe Ry. Co. reports that a number of spalls and cracks are due to mishandling in transit.

The following state transportation departments made specific comments. Pennsylvania reported that horizontal misalignment and twist problems are usually caused by mishandling. Indiana reported using epoxy injection to repair cracks due to mishandling. Washington has developoped new criteria for checking girder stresses at time of lifting or transportation. Louisiana reported that they had knowledge of minor defects only. Additional records were not available. Connecticut reported that small spalls are patched. New Mexico reported accepting minor hairline cracking. The province of Ontario, Canada, reported replacing five girders due to mishandling accidents.

Manufacturers' Comments

Accidental damage to girders at the plant due to handling is rare. Handling accidents at the job site are infrequent but do occur. The primary reason is the condition of the access road. If the access road has a steep transverse slope or a soft surface, the hauling vehicle and girder may tilt enough to cause the girder to be unstable and break. On rare occasions, the contractor's handling equipment may be inadequate. In general, handling accidents at the job site are either very minor (such as minor concrete spalls) or total (buckling and complete failure). Some states recommend the use of lateral bracing trusses to be used on long girders during transporting and handling at the bridge site. It is the general opinion of the manufacturers that the trusses commonly used contribute very little stiffness. Manufacturers generally deliver F.O.B. job site.

Recommendations

Findings based on agency comments and personal interviews indicate that mishandling accidents are either relatively minor (spalls, hairline cracking, etc.) or catastrophic (the girder breaks completely). The amount of lateral tilt that a girder can accept short of collapsing can be calculated. Although manufacturers normally assume responsibility for delivery to the job site, catastrophic accidents will increase the cost of girders and are also hazardous. The recommendation is made that any agency having major handling problems should review procedures being used to lift and transport girders. The repair of minor defects should be in accordance with the guidelines given in Chapter Three.

Miscellaneous Defects

Agency Comments

Vermont reported an instance of void forms moving during casting of concrete. Michigan reported incorrect tie-rod locations for box-girder inserts. New inserts were drilled in and epoxy mortared. Minnesota commented on having to reject girders because of deep rock pockets. Ohio reported rare instances of under-strength concrete. The strength was verified by testing cylinders cored from the girder. If the strength was close, they would pay a reduced amount for the girder. If the strength was unacceptable, the girder was rejected. Oregon reported having rejected girders with low concrete strength. No comments were received from manufacturers, and no recommendations are made.

APPENDIX B

INFORMATION REQUEST QUESTIONNAIRE

GEORGE O. SHANAFELT & WILLIS B. HORN
Consulting Engineers
5709 Blacklake-Belmore Road S.W.
Olympia, Washington 98502
(206) 943-1099

INFORMATION REQUEST FOR

EVALUATION OF DAMAGE AND METHODS OF REPAIR FOR PRESTRESSED CONCRETE BRIDGE MEMBERS (NCHRP 12-21)

This information request is directed to Bridge Engineers to gather general information regarding damage evaluation and repair of prestressed concrete bridge members. It is not intended to solicit voluminous statistical data.

IDENTIFICATION

AGENCY:

PREPARED BY: POSITION:

TELEPHONE NUMBER:

DATE:

I. DAMAGE TO PRESTRESSED CONCRETE BRIDGES (PCB):

A. Number of PCB on Highway System: _____

B. Types of prestressed concrete girders used: (Please furnish typical cross sections)

C. Number of PCB damaged per average year:

Grade Separation ____ Other ____

Please show how number damaged per average year is obtained. (e.g., $\frac{\text{Number Damaged}}{\text{No. of Years}}$)

D. Severity of PCB damaged: Average No. Per Year

1. Minor with no action taken _____
2. Moderate requiring concrete repair only _____

Average No. Per Year

3. Moderate requiring concrete and reinforcing repair but not requiring temporary traffic restrictions in any lane _____
4. Severe requiring concrete and reinforcing repair with temporary traffic restrictions required _____
5. Major requiring girder replacement with temporary traffic restrictions required in some lanes until repairs completed _____
6. Major requiring girder replacement with total traffic closure _____
7. Major with permanent traffic restrictions _____
8. Other (Identify)

_____

Briefly describe your criteria for assessment of severity of damage to PCB.

E. Number of PCB damaged per year by:

1. Overheight loads _____
2. Overweight loads _____
3. Fire _____
4. Other (Identify

_____

F. Number of PCB members found defective during fabrication, storage and construction but were used with corrective modifications:

(Please send copy of standard procedures or specifications where applicable)

Number

1. Minor defects (i.e., spalls, rock pockets, hairline cracks away from precompressed areas, etc.) _____

How modified:

2. Horizontal misalignment _____

How modified:

3. Twist (Rotational misalignment) _____

How modified:

4. Mislocation of strands and reinforcing _____

How modified:

5. Mishandling _____
6. Other (Identify) _____

How modified:

7. Office responsible for inspection prior to PCB completion:

	Always	Sometimes	Never
a) Materials Engineer	____	____	____
b) Construction Engineer	____	____	____
c) Bridge Engineer	____	____	____
d) Other (Identify)	____	____	____

II. INSPECTION OF DAMAGED PCB:

A. Office responsible for damage inspection:

	Always	Sometimes	Never
1. Bridge Engineer	____	____	____
2. Highway Maintenance Engineer	____	____	____
3. Other (Identify)	____	____	____

B. Inspection performed by:

1. Structural Engineers	____	____	____
2. Other (Identify)	____	____	____

C. Equipment utilized for inspection:

Please list all equipment used for field inspection including equipment to get to point of damage and equipment to assess extent of damage.

D. Information included in damage report:

Please list all types of information reported on basis of inspection. If you have a damage report form please enclose a copy.

III. REPAIR AND/OR REPLACEMENT OF PCB MEMBERS:

A. Office responsible for preparation of plans and specifications:

	Yes	No
1. Bridge Engineer	____	____
2. Other (Identify)	____	____

B. Repair work accomplished by:

	Percentage of No. of Damages
1. Contract	____
2. Agency personnel	____
3. Other (Identify)	____

C. Relative importance of the following in determining repair method and procedures: (show most important as 1, etc.) These rankings vary depending on a given situation. Please consider the situation to be "the norm".

1. Cost	____
2. Speed of repairs	____
3. Inconvenience to users	____
4. Load capacity	____
5. Durability	____
6. Esthetics (Assume grade separation)	____
7. Other (Identify)	____

Please furnish any criteria developed to establish relative importance.

D. Factors affecting decisions for repair procedures:

(If any of the following are factors in assessment and design, please furnish typical details and calculation methods.)

	Always	Sometimes	Never
1. Ultimate load capacity	____	____	____
2. Overload capacity	____	____	____
3. Service load capacity	____	____	____
4. Fatigue life	____	____	____
5. Other (Identify)	____	____	____

E.* Approximate Relative Cost:

$$\frac{\text{Cost to Replace Girder}}{\text{Cost to Repair Girder in Place}} = \_\_\_\_\_$$

$$= \_\_\_\_\_$$

$$= \_\_\_\_\_$$

(*) Furnish ratios for several projects if available. Approximate costs should be total, including inspection, design and analyses and other indirect costs to repair or replace. These costs to be from Contract Price or Engineers Estimate.

F. Describe procedures utilized to determine whether damaged member is repaired-in-place or replaced:

G. Methods used to repair PCB members in place: (If yes please furnish typical details)

	Yes	No
1. Epoxy injection	____	____
2. Splicing of strands	____	____
3. Adding prestress force	____	____
4. Adding mild strength reinforcing	____	____
5. Preload structure prior to repair to induce final compressive stress	____	____
6. Other (Please Describe)	____	____

H. Methods used to replace PCB members:

	Yes	No
1. By removal and replacement in kind	____	____
2. Other (Please describe)	____	____

I. Procedures utilized to verify effectiveness of repair methods:

1. Load tests	____	____
2. Horizontal and vertical measurements	____	____
3. Follow-up inspections	____	____
Schedule_____		
4. Other (Identify)	____	____

5. Comments on durability of repairs

J. Please furnish copies of typical plans and specifications for repair-in-place and replacement projects.

IV. GENERAL:

A. Has your agency or a member of it, published any information regarding questions asked in this questionnaire? ___Yes ___No

If yes please give title, author, publication and issue date.

B. Other information you believe might be useful to this project.

C. One objective of this Information Request is to help us select states to visit to provide the most meaningful information for this research project. Person to be contacted for arranging possible visit and to clarify information furnished above is:

Name:

Title:

Address:

Telephone Number:

If you desire that the information you provide be held in confidence, please check ____. Please return at your earliest convenience, but no later than August 20, 1979, to:

George O. Shanafelt & Willis B. Horn
Consulting Engineers
5709 Black Lake - Belmore Road S.W.
Olympia, WA 98502

APPENDIX C

NOTATIONS AND DEFINITIONS

A = area
Agross = gross area
Anet = net area
Avf = area of shear friction reinforcement
b = width of flange
bot. = bottom
c = compression
c.g. = center of gravity
d = distance from extreme compression fiber to centroid of the prestressing force
d′ = distance from extreme compression fiber to bottom layer of prestressing elements
D = nominal diameter
DL = dead load
Ec = modulus of elasticity concrete
Es = modulus of elasticity steel
f = stress
fc = compressive stress
fs = steel stress
ft = tensile stress
fy = yield point stress
fse = effective steel prestress after losses
f′s = ultimate stress of steel
f*su = average stress in prestressing steel at ultimate load
f′c = compressive strength of concrete at 28 days
I = moment of inertia about the centroid of the cross section
I = impact load
ksi = kips per square inch
l = length
LL = live load
M = moment
Mu = ultimate load moment
n = ratio ES/Ec
p = As/bd = ratio of tension reinforcement
psi = pounds per square inch
P = load
PCB = prestressed concrete bridge (or bridges)
Pu = ultimate load
PVC = poly vinyl chloride
S = section modulus
T = tension
u = coefficient of friction
v = shear stress
Vu = ultimate load shear
w = weight
ϕ = round
ϕ (phi) = strength reduction factor
Δ = elongation

THE TRANSPORTATION RESEARCH BOARD is an agency of the National Research Council, which serves the National Academy of Sciences and the National Academy of Engineering. The Board's purpose is to stimulate research concerning the nature and performance of transportation systems, to disseminate information that the research produces, and to encourage the application of appropriate research findings. The Board's program is carried out by more than 150 committees and task forces composed of more than 1,800 administrators, engineers, social scientists, and educators who serve without compensation. The program is supported by state transportation and highway departments, the U.S. Department of Transportation, and other organizations interested in the development of transportation.

The Transportation Research Board operates within the Commission on Sociotechnical Systems of the National Research Council. The Council was organized in 1916 at the request of President Woodrow Wilson as an agency of the National Academy of Sciences to enable the broad community of scientists and engineers to associate their efforts with those of the Academy membership. Members of the Council are appointed by the president of the Academy and are drawn from academic, industrial, and governmental organizations throughout the United States.

The National Academy of Sciences was established by a congressional act of incorporation signed by President Abraham Lincoln on March 3, 1863, to further science and its use for the general welfare by bringing together the most qualified individuals to deal with scientific and technological problems of broad significance. It is a private, honorary organization of more than 1,000 scientists elected on the basis of outstanding contributions to knowledge and is supported by private and public funds. Under the terms of its congressional charter, the Academy is called upon to act as an official—yet independent—advisor to the federal government in any matter of science and technology, although it is not a government agency and its activities are not limited to those on behalf of the government.

To share in the tasks of furthering science and engineering and of advising the federal government, the National Academy of Engineering was established on December 5, 1964, under the authority of the act of incorporation of the National Academy of Sciences. Its advisory activities are closely coordinated with those of the National Academy of Sciences, but it is independent and autonomous in its organization and election of members.

TRANSPORTATION RESEARCH BOARD
National Research Council
2101 Constitution Avenue, N.W.
Washington, D.C. 20418

ADDRESS CORRECTION REQUESTED