NATIONAL COOPERATIVE
HIGHWAY RESEARCH PROGRAM REPORT

271

GUIDELINES FOR EVALUATION AND REPAIR OF DAMAGED STEEL BRIDGE MEMBERS

TRANSPORTATION RESEARCH BOARD
NATIONAL RESEARCH COUNCIL

NATIONAL COOPERATIVE HIGHWAY RESEARCH PROGRAM REPORT 271

GUIDELINES FOR EVALUATION AND REPAIR OF DAMAGED STEEL BRIDGE MEMBERS

G. O. SHANAFELT and W. B. HORN
Consulting Engineers
Olympia, Washington

RESEARCH SPONSORED BY THE AMERICAN ASSOCIATION OF STATE HIGHWAY AND TRANSPORTATION OFFICIALS IN COOPERATION WITH THE FEDERAL HIGHWAY ADMINISTRATION

AREAS OF INTEREST:

STRUCTURES DESIGN AND PERFORMANCE
GENERAL MATERIALS
MAINTENANCE
(HIGHWAY TRANSPORTATION)
(PUBLIC TRANSIT)
(RAIL TRANSPORTATION)

TRANSPORTATION RESEARCH BOARD
NATIONAL RESEARCH COUNCIL
WASHINGTON, D.C.

JUNE 1984

NATIONAL COOPERATIVE HIGHWAY RESEARCH PROGRAM

Systematic, well-designed research provides the most effective approach to the solution of many problems facing highway administrators and enginees. Often, highway problems are of local interest and can best be studied by highway departments individually or in cooperation with their state universities and others. However, the accelerating growth of highway transportation develops increasingly complex problems of wide interest to highway authorities. These problems are best studied through a coordinated program of cooperative research.

In recognition of these needs, the highway administrators of the American Association of State Highway and Transportation Officials initiated in 1962 an objective national highway research program employing modern scientific techniques. This program is supported on a continuing basis by funds from participating member states of the Association and it receives the full cooperation and support of the Federal Highway Administration, United States Department of Transportation.

The Transportation Research Board of the National Research Council was requested by the Association to administer the research program because of the Board's recognized objectivity and understanding of modern research practices. The Board is uniquely suited for this purpose as: it maintains an extensive committee structure from which authorities on any highway transportation subject may be drawn; it possesses avenues of communications and cooperation with federal, state, and local governmental agencies, universities, and industry; its relationship to the National Research Council is an insurance of objectivity; it maintains a full-time research correlation staff of specialists in highway transportation matters to bring the findings of research directly to those who are in a position to use them.

The program is developed on the basis of research needs identified by chief administrators of the highway and transportation departments and by committees of AASHTO. Each year, specific areas of research needs to be included in the program are proposed to the National Research Council and the Board by the American Association of State Highway and Transportation Officials. Research projects to fulfill these needs are defined by the Board, and qualified research agencies are selected from those that have submitted proposals. Administration and surveillance of research contracts are the responsibilities of the National Research Council and the Transportation Research Board.

The needs for highway research are many, and the National Cooperative Highway Research Program can make significant contributions to the solution of highway transportation problems of mutual concern to many responsible groups. The program, however, is intended to complement rather than to substitute for or duplicate other highway research programs.

NCHRP REPORT 271

Project 12-17A FY'79

ISSN 0077-5614

ISBN 0-309-03850-2

L. C. Catalog Card No. 84-51482

Price $7.60

NOTICE

The project that is the subject of this report was a part of the National Cooperative Highway Research Program conducted by the Transportation Research Board with the approval of the Governing Board of the National Research Council. Such approval reflects the Governing Board's judgment that the program concerned is of national importance and appropriate with respect to both the purposes and resources of the National Research Council.

The members of the technical committee selected to monitor this project and to review this report were chosen for recognized scholarly competence and with due consideration for the balance of disciplines appropriate to the project. The opinions and conclusions expressed or implied are those of the research agency that performed the research, and, while they have been accepted as appropriate by the technical committee, they are not necessarily those of the Transportation Research Board, the National Research Council, the American Association of State Highway and Transportation officials, or the Federal Highway Administration, U.S. Department of Transportation.

Each report is reviewed and accepted for publication by the technical committee according to procedures established and monitored by the Transportation Research Board Executive Committee and the Governing Board of the National Research Council.

The National Research Council was established by the National Academy of Sciences in 1916 to associate the broad community of science and technology with the Academy's purposes of furthering knowledge and of advising the Federal Government. The Council has become the principal operating agency of both the National Academy of Sciences and the National Academy of Engineering in the conduct of their services to the government, the public, and the scientific and engineering communities. It is administered jointly by both Academies and the Institute of Medicine. The National Academy of Engineering and the Institute of Medicine were established in 1964 and 1970, respectively, under the charter of the National Academy of Sciences.

The Transportation Research Board evolved in 1974 from the Highway Research Board which was established in 1920. The TRB incorporates all former HRB activities and also performs additional functions under a broader scope involving all modes of transportation and the interactions of transportation with society.

Special Notice

The Transportation Research Board, the National Research Council, the Federal Highway Administration, the American Association of State Highway and Transportation Officials, and the individual states participating in the National Cooperative Highway Research Program do not endorse products or manufacturers. Trade or manufacturers' names appear herein solely because they are considered essential to the object of this report.

Published reports of the

NATIONAL COOPERATIVE HIGHWAY RESEARCH PROGRAM

are available from:

Transportation Research Board
National Research Council
2101 Constitution Avenue, N.W.
Washington, D.C. 20418

Printed in the United States of America

FOREWORD

By Staff
Transportation
Research Board

This report contains the findings of a comprehensive assessment of methods for damage evaluation and repair of steel bridge members. These findings, in the form of a manual of recommended practice, are immediately applicable and will be of interest to engineers, researchers, and others concerned with the design, construction, and maintenance of steel bridges.

Steel bridge members often are subjected to damage due to accidental impact, mishandling, or fire. Methods used for repair of such members include heat straightening and welding or bolting splices, replacement components, or reinforcement. At present, the decision to repair a damaged member, and the techniques used, are determined on the basis of the inspector's or engineer's evaluation of the situation, with little sound engineering information available for guidance. To place this decision-making process on a more rational basis, it is necessary to assemble information concerning the effect of these repair techniques on the service life, safety, performance, and maintenance of the structure. Decisions on method of repair must also consider the costs, user inconvenience, and esthetics of the repair technique.

This report contains the findings of NCHRP Project 12-17A, "Guidelines for Evaluation and Repair of Damaged Steel Bridge Members." The objectives of this study were to provide guidance for the assessment of accidental damage to steel bridge members and to identify, develop, and evaluate the effectiveness of repair techniques.

The main portion of this report consists of a manual of recommended practice containing detailed procedures for evaluation of damage as well as information on repair techniques and the effects of those repairs. Information presented in this report will be useful immediately in solving practical problems in bridge repair. Guidelines are presented for the following methods of repair: flame straightening, hot mechanical straightening, cold mechanical straightening, welding, bolting, partial replacement, and complete replacement.

The researchers' complete, final report on this study is included in the appendix. Background on the research approach and additional details are presented on the findings that led to the development of the manual.

CONTENTS

ACKNOWLEDGMENTS

The research reported herein was performed under NCHRP Project 12-17A. Willis B. Horn and George O. Shanafelt were principal co-investigators for the research and are the co-authors of this report.

Grateful acknowledgment is extended to the many departments of transportation who responded to the researchers' request for information and advice, with keen interest and cooperation. Special thanks are given to the bridge engineering personnel of the States of Colorado, Kansas, Maryland, Massachusetts, Michigan, New Hampshire, New Jersey, New York, Pennsylvania, Texas, and Washington. Special acknowledgment is also made to the High Structural Steel Company in Lancaster, Pennsylvania.

Sincere appreciation is expressed to Barbara L. Russo, chief librarian for the Washington State Department of Transportation, for her generous assistance.

GUIDELINES FOR EVALUATION AND REPAIR OF DAMAGED STEEL BRIDGE MEMBERS

SUMMARY

This report is primarily a practical user's manual for dealing with damaged steel bridge members. It is the second phase of a two-phase research program conducted under NCHRP Project 12-17A. The first phase report (*11*) found that 33 states had a total of 815 bridges damaged over a 5-year period. Seven-hundred sixty-seven of these bridges were repaired. The 48 remaining bridges were either replaced or remained in service without repair. Ninety-four percent of the bridges damaged included damage due to overheight vehicles. Other reported causes of damage were overweight vehicles, overwidth vehicles, out-of-control vehicles, and a marine collision. The types of steel bridges most frequently damaged are girder and truss bridges. However, the guidelines are also applicable to other steel bridge types. The first-phase report contains information on state acceptance of various repair processes. This second-phase report contains existing practices for assessment of damage and the evaluation of these existing practices.

There is no known published report that deals with the entire problem of damage to steel bridge members. This lack of information and guidelines has resulted in repair techniques that are not always appropriate for particular damage incidents. The decision to repair or replace a damaged member is most often based on an evaluation made under the emergency pressure to restore the facility to use. The findings indicate that some repair-in-place methods do not adequately restore members to their original condition. Some members have been replaced where the findings indicate that repair-in-place techniques would have been more appropriate.

The user's manual in this report establishes guidelines for evaluation and repair of damaged steel bridge members. The guidelines are based on information gathered during the first-phase report plus additional information collected from knowledgeable individuals, state personnel, a steel fabricator, and literature. Included in the guidelines are inspection of damage (Ch. Two), assessment of damage (Ch. Three), selection of repair method (Ch. Four), and repair of damage (Ch. Five). Included in methods of repair are flame straightening, welding, hot straightening, cold straightening, and bolting.

The guidelines for assessment of damage and for selection of repair methods are structured to result in logical and appropriate techniques. Primary factors included are strength of damaged member, user inconvenience and speed of repairs, fracture critical members, type of steel and steel properties, the effect of vehicle impact on steel properties, strength of repair methods, effect of toughness on repair method criteria, durability of repair, and relative cost. Each repair technique is addressed in a thorough and logical manner. Examples of good and poor techniques are given.

One finding of this study is that many highway agencies have not organized the process of evaluation and repair of damaged steel members. Case histories are generally incomplete or not available. Good documentation builds up a background of experience that can be very useful in future damages. Another finding of this report is that the damage inspection phase should be differentiated and separated from the engineering

assessment phase. Inspection should report the factual, pertinent damage information. Damage assessment should then be accomplished through logical engineering calculations.

A principal finding of this study is that many states do not use flame straightening as a method of repair. This less expensive and efficient repair method has been used successfully for more than four decades. Flame straightening accomplished in accordance with the guidelines in this manual will not degrade steel properties significantly. The manual may encourage many additional highway agencies to use this effective repair method. Cold mechanical straightening may be accomplished under certain conditions without significantly degrading steel properties. Hot mechanical straightening is recommended for limited usage. Welding in accordance with manual guidelines can be an effective repair method. Bolted splicing is a very safe method of repair and is recommended for the repair of fracture critical members, and repair of A-514 and A-517 high-strength steels.

The manual contained in Chapters One through Five has been written in a constructive manner and should contribute to the development of good techniques for evaluation and repair of damaged steel bridge members. The report on how the research was conducted and the research results are detailed in Appendix A. This appendix also covers the conclusions reached and suggestions for further research. Bibliographic references are provided in Appendix B.

CHAPTER ONE

INTRODUCTION TO MANUAL OF RECOMMENDED PRACTICE

This user's manual establishes guidelines for evaluation and repair of accidentally damaged steel bridge members. Included in the guidelines are inspection of damage, assessment of damage, selection of repair method and repair of damage. Methods of repair include flame straightening, welding, hot straightening, cold straightening, bolting, partial replacement, and full replacement. The guidelines for assessment of damage and selection of repair methods are structured to lead to logical and appropriate methods of repair. However, this manual is not a handbook. The "Commentary" section in Appendix A explains why certain guidelines were adopted. All manual users should study the Commentary. References have been given to support conclusions.

Each repair technique is addressed in a thorough and logical manner. Combinations of repair methods are discussed. Examples of good and poor techniques are given. Drawings and photographs are included to supplement the written text. Dimensions and sizes shown on these drawings are not expected to be typical for specific use. The guidelines are practical in nature and based on the best information currently available.

CHAPTER TWO

GUIDELINES FOR INSPECTION OF DAMAGE

Best inspection and assessment of damage will be accomplished by establishing standard procedures for inspection, reporting, engineering assessment, and the monitoring of completed repairs. The monitoring of repairs has been included in inspection of damage to afford personnel responsible for inspection the opportunity to improve their damage inspection and assessment techniques. From information gained through this research project, it is recommended that personnel responsible for inspection and damage assessment develop their specific procedures prior to the time when it is required to respond to a damage incident. This will better ensure uniform treatment and more orderly progress. Establishment of procedures, without pressure from an emergency, should result in best practices. Coordination and sharing of input should occur between all personnel that will participate in the inspection and assessment process. All departments of transportation that participated in this research indicated the interest and expertise required to organize this area of the problem in a manner that will suit their particular needs.

All sections of the "Manual of Recommended Practice" should be thoroughly studied prior to starting work on any single phase.

OFFICE RESPONSIBLE FOR INSPECTION

The bridge engineer is normally responsible for the preparation of repair plans. Because the bridge engineer is responsible for repair design, this office should be responsible for inspection. One major component for assessment of damage is the field inspection of damage. The bridge engineer's office should be best qualified for inspection of damage. Where organization constraints place the responsibility with others, cooperative action with bridge engineer personnel should be a requirement.

INSPECTOR QUALIFICATIONS

Damage inspection shall be performed by competent personnel. Severe damage shall be inspected by competent structural engineers.

INITIAL INSPECTION AND ACTION

The primary objectives of initial inspection should be to ensure safety to the user and to reduce further damage to the bridge. When damage is severe, an experienced structural engineer should make the initial inspection and determine whether to restrict traffic or close the bridge. Preliminary strengthening should be made immediately to prevent further damage. Preliminary strengthening may also be made to allow traffic on the bridge. These preliminary actions are normally based on judgment supplemented by brief calculations. If a severely damaged member is fracture critical, immediate steps should be taken to prevent bridge collapse. When a member is damaged beyond repair, the engineer may recommend at this time to partially or wholly replace the member.

When bridge closure is required, sufficient time must be allowed to ensure that adequate inspection and comprehensive evaluation is achieved. When safety of the user is in question, the bridge should be closed until it is conclusively determined that traffic can be safely restored, Political and public pressure should not be allowed to cause unwarranted decisions when safety is involved. Damage inspection and evaluation involving structural safety may normally require engineering office time. Extensive temporary support and strengthening systems may require plan preparation and procurement of materials. All temporary structural systems must be designed to ensure safety to the user. The time required to restore traffic will depend on severity of damage and will vary with each accident. The engineering staff should recognize the need for expediency. Damage evaluation and plan preparation should have immediate priority. However, user safety must take precedence over restoration of traffic.

INSPECTION SEQUENCE AND RECORD

Damage inspection normally begins with the most critically damaged area first, followed by inspection of other damage in descending order of severity. Inspect the main supporting members first. Tension members should be inspected for indication of cracking. Compression members should be inspected for indications of buckling. When more than one member has been damaged, a complete description of damage for each member should be given.

All areas inspected, including those areas inspected that did not suffer damage, shall be recorded. This procedure aids the decision-making process of what, if anything, should be done to repair a member.

INSPECTION EQUIPMENT AND SKILLS

Good access to the damaged area is necessary. A platform truck with adjustable height platform or a "cherry picker" is very useful. Check to ensure that the damaged structure can support inspection loads before putting any loads on the structure. It may seem obvious, but a large amount of information can be gained from visual inspection. Personnel assigned to inspection should have good eyesight and a critical mind. The fact should be accepted that some engineers have better qualities of observation. For the best inspection, personnel should be

assessed accordingly. Significant deformations, distortions, nicks, cracks, and gouges can often be detected by eye alone. A flashlight and mirror are excellent tools for inaccessible locations. A magnifying glass should be included with inspection equipment. With 10X magnification, comparatively small cracks can be detected. Under good conditions, surface cracks 0.004 in. wide (0.1 mm) can be seen. The surface must be clean. Painted surfaces should be visually inspected for cracks. Cracks in paint and rust staining are indications of cracking in the steel. Heavy coatings of ductile paint may bridge over cracks that are tight. When there is any doubt about ability to inspect for cracks, the paint should be removed. Damaged fracture critical members should be blast cleaned and magnetic particle inspected.

The inspection team should have good camera equipment. It is recommended that, in addition to a conventional camera, an instant photo camera be included. The instant photo camera will provide immediate pictures for evaluation purposes, while the conventional photographs will provide the more permanent record. Training should be provided to ensure that a sufficient number of properly descriptive pictures are taken of each damage. String lining can be used to determine bending offsets and curvature. Dial gauges could be assembled for determining curvature but are not necessary.

Magnetic particle, or dye penetrant, and/or ultrasonic testing may be necessary for detecting and determining ends of cracks. The use of this type of testing must be closely correlated with damage assessment. For example, it would be unproductive to use this type of testing in an area that will require partial replacement.

Rockwell hardness tests are a useful indicator in determining the type of an unknown steel. Filings can be taken to obtain chemical analysis. Charpy impact and tensile tests can be made on specimens taken from the member if the steel quality is unknown. These tests are not used on a routine basis. They may be used if there are other indications of questionable steel quality such as high Rockwell hardness, cracks in areas of plastic strain, and evidence of brittle fracture.

INSPECTION REPORT

Standard Form

It is useful to develop a standard form to be used in reporting damage. Items that are common to all damaged members, such as bridge name, location, and site conditions, may be shown on a single form. A separate form sheet will generally be required for each member, and it may be appropriate to use different forms for trusses and plate girders. If necessary, attachments to the form can be made to more fully describe the damage. The usefulness of a standard form is primarily to set forth in an organized manner the results of the inspection. An inspection form also serves as a reminder for the inspector of the various items to inspect. All reports should be clear and legible.

Most agencies have plans for existing bridges. These plans are valuable to have on hand during the bridge inspection and may be used to supplement the standard forms. When plans are not available, more sketches may be needed. Members should be precisely identified in accordance with the plans and/or with clearly detailed sketches. Good photographs are very helpful in making damage assessments and subsequent repairs. All photographs should be clearly labeled, giving name of object, direction of view, and approximate distance to object. The amount of bending deflection and rotational twist shall be measured at enough points to draw an accurate curve.

The inspection report should not normally contain recommended repair procedures. Factors that might alter solutions should be included.

A cross-referenced record system should be established to provide ready access to all steel damage incidents. This system should provide ready access to the inspection reports. Damage categories should contain type of structure, cause of damage, type of steel, and type of member. Damage assessment calculations, repair calculations and repair details should be included.

Contents

When only part of a member is damaged, the member element should be substituted for member. The contents of the inspection report should include:

1. Bridge Name
2. Bridge Location Description including Location Map
3. Date of Damage
4. Date of Inspection
5. Law Enforcement Accident Report
6. Cause of Damage
7. Site Conditions
   a. Damage Over Traffic
   b. Damage Over Water
   c. Other
8. Type of Structure
9. Information on User Inconvenience
10. Bridge Plans if Available
11. Supplementary Sketches
12. Member Identification
13. Member Category
    a. Fracture Critical
    b. Primary
    c. Secondary
    d. Compression
    e. Tension
14. Type of Steel
15. Information on Steel Properties
16. Description of Damage
    a. Nicks and Gouges
    b. Cracks
    c. Member Displacement and Curvature
    d. Member or Bearing Rotation
    e. Tears
    f. Member Severed
    g. Photographs
    h. Narrative Description
17. Factors That May Affect Repair Solutions
18. Description of Initial Action
    a. Traffic Restriction
    b. Member Strengthening
    c. Other

MONITORING OF REPAIRS

Follow-up inspection of repairs should be on a regular basis. All of the recommended repairs in this manual are intended to restore members to their required strength and durability. However, experience has shown that complete restoration may not be possible for all damages. Practical considerations such as cost and user inconvenience may also dictate the use of repairs that have an element of doubt regarding complete restoration. Members that have complete restoration should be inspected with the same frequency as the complete bridge. Member repairs containing reasonable doubt regarding strength and durability should be inspected at more frequent intervals. The frequency should be established by the persons responsible for repair, and the bridge maintenance engineer should be advised.

CHAPTER THREE

GUIDELINES FOR ASSESSMENT OF DAMAGE

These guidelines have been developed from the evaluation of present techniques and an objective/subjective analysis gained from actual working experience. Guidelines have not been included for established procedures that are commonly used in this type of work. Except as specifically noted, guidelines for accomplishing work have not been repeated where information on these items is covered elsewhere in this manual. Reference is made to "Guidelines for Repair of Damage" (Ch. Five). This manual does not endorse products or manufacturers. Trade or manufacturers' names, if included, are only for guidance and possible contact by those who have not developed their own specifications for materials that might be used in repair techniques.

As noted in the summary of this report, the most frequent cause of damage is due to overheight vehicle impacts. Other reported causes of damage were overweight vehicles, overwidth vehicles, out-of-control vehicles, and a marine collision. Steel members are occasionally damaged because of mishandling and from fire. Guidelines furnished in this manual are applicable to all of the above types of damage.

The purpose of assessment of damage is to decide what should be done to an accidentally damaged steel member. One of three decisions should be made:

1. Do nothing.
2. Repair the member.
3. Replace the member.

Repair of the member includes partial replacement of members. Assessment of damage stops short of "Selection of Repair Method."

ASSESSMENT OF DAMAGE BY WHOM AND WHERE

Preliminary assessment of damage shall be made during inspection of damage as described under "Initial Inspection and Action" in Chapter Two, "Guidelines For Inspection of Damage".

Final assessment of damage is preferably made by the same persons who inspected damage. Assessment of damage can also be made by other persons experienced in dealing with accidentally damaged steel members. At least one experienced structural engineer should participate in the final assessment of damage. Final assessment of damage should be made in an office environment away from the bridge site. The lack of adequate time is often a critical element in the assessment and repair of seriously damaged members. Personnel directly involved in assessment, selection of repair, and repair, should certainly be made aware of the importance of time. Management, however, should not place undue distractions or pressure on the persons directly involved. The best repair decisions are made when pressure is limited, and generally minimize overall repair time.

STRENGTH OF DAMAGED MEMBER

Brief calculations determining the approximate strength of the member may be made during the inspection phase. These calculations are normally made to detemine whether to restrict traffic or close the bridge. These preliminary calculations may also be made to determine the necessity of preliminary strengthening in order to prevent further damage to the bridge.

During assessment of damage, a complete evaluation of strength should be made. This analysis should determine stress levels in the damaged member, and these stresses shall be compared to the design stresses. Service load stress should always be computed. Overload, ultimate load, and fatigue stresses should be calculated as appropriate. Stress calculations should include the effect of stress range and the fatigue category of the member. All preliminary calculations and decisions made during the inspection phase shall be reviewed.

USER INCONVENIENCE AND SPEED OF REPAIRS

User inconvenience and speed of repairs are so interrelated, they are considered as one in this manual. The following are general guidelines that should be considered to address these items:

1. Safety to users and strength of the structure shall have primary importance. The decisions as to stability of the damaged structure, or portions thereof, shall be conservative.
2. Depending on the actions required by the damage, the best traffic control system shall be established. To reduce user inconvenience, the establishment of the best detour route should be carefully considered.
3. Recognizing that the initial decision probably was made only on inspection of the damage, the engineering assessment should be made immediately. Should the engineering assessment determine that initial traffic restrictions were too severe, they should be revised to reduce user inconvenience.
4. Procedures to obtain emergency replacement girders for girder bridges should be established in advance of accident happenings. The need for any specialized equipment and materials should be established. The work that can effectively be accomplished by state forces should be known by all personnel that may be involved in assessmet and repair.
5. The acceptability of various repair-in-place techniques should be established prior to an accident. Should any of the repair techniques outlined in this manual appear advantageous, it is recommended that they be studied at an early date. There are normally some features that are unique for each accident. However, the need for types of repair equipment is similar. The availability of come-alongs, jacking posts, and temporary vertical posts for use in repairing girder bridges should be studied in advance. Similar equipment for through truss bridge accidents may be needed. In addition, jacking posts to relieve the stress on damaged compression members and auxiliary cables or tension elements to relieve tension on tension members may be needed.
6. Replacement methods should also be studied prior to accidents to facilitate fast action.
7. A team should be trained and equipped to respond to emergencies. This team could then train and supervise other personnel on the job.
8. The required speed of repairs may dictate replacement or repair-in-place techniques, and each agency's ability to respond to a particular situation may dictate the final decision. Climatic conditions also may influence decisions affecting user inconvenience and speed of repairs.
9. In general, repair-in-place techniques will result in less inconvenience to users. Because of less removal work, repair-in-place techniques should also result in faster repairs.

FRACTURE CRITICAL MEMBERS

Fracture critical members (FCM) or member components are tension members, or tension components of members, whose failure would be expected to result in collapse of the structure. Tension components of bridge members consist of components of tension members and those portions of flexural members that are subject to tensile stress. Any attachment that is welded to a tension component of a fracture critical member becomes a part of the tension component and is therefore fracture critical. Examples of facture critical members are the girders of a two-girder bridge, steel pier cap beams, tie girders of a tied arch bridge, suspended span hangers, truss tension chord and web members, and other nonredundant members.

Fracture critical members shall receive a more rigorous assessment of damage than nonfracture critical members. Selection of repair procedures for fracture critical members shall be more conservative than selecting repair procedures for nonfracture critical members. In general, crack repairs shall be made with bolted splices. If other methods are used, such as welding or flame straightening, elements shall be fully strengthened by adding new bolted splice material. Enough new material shall be added so that the damaged material can be neglected in computing strength.

See section on "Bolting" in Chapter Five for repair of fracture critical members.

PRIMARY MEMBERS

Primary members can be classified as compression or tension members. Tensile areas of members such as tensile portions of girders are treated as tensile members. Many of the limiting restrictions in this manual apply only to tension members.

To qualify as a compression member, no combination of loading shall produce tension in the portion of the member being repaired. Compression members are not fatigue critical and, therefore, stress range limitations used for tensile members do not apply. Charpy impact toughness requirements apply to tension members only. Strain limitation values apply to tension members only. Most cracks in bridge steels subject to compression may be satisfactorily repaired by welding. Most partial replacement repairs can be satisfactorily welded in compression areas.

SECONDARY MEMBERS

Secondary members are stressed because of deflection of primary members and/or are stressed because of secondary loads such as wind and earthquake. Secondary members that carry compression only shall be assessed and repaired in the same manner as primary compression members. Tension secondary members may be repaired by flame straightening and hot mechanical or cold mechanical straightening. Cracks can be repaired by straightening and welding provided the steel is weldable. No limitation on maximum strain shall be placed on secondary members, provided they can be straightened to allowable alignment.

TYPE OF STEEL AND STEEL PROPERTIES

When bridge plans are available, the type of steel will normally be shown on the plans. The type of steel and its properties have a major influence on damage assessment and the selection of the type of repair. When the type of steel is not known, a strong effort should be made to determine the steel characteristics. This effort is particularly important in assessing damage and selecting repairs for tension members. The New York State Department of Transportation has found that welding steels with Rockwell

hardness greater than C30 requires special care, including high preheat, interpass, and post-heat temperatures. Rockwell hardness is one indication of type of steel. A complete chemical analysis should be performed before welding unidentified hard steels.

If necessary, specimens can be cut from nonstressed areas of the member and tested. Chemical analysis can be performed on chips obtained by shallow drilling. The information required is related to the proposed repair method. Bolted splices do not affect member properties, other than to reduce the net area, and can be used with all bridge steels. Flame straightening in compliance with the guidelines recommended in this report does not significantly degrade bridge construction steels, with the possible exception of A-514 and A-517 steels, and can be used with nearly all bridge construction steels. Welding of tension members requires the most knowledge of member properties and composition. Repair welding is not recommended unless enough knowledge is available to know that the steel is weldable. Hot mechanical straightening and cold mechanical straightening are recommended for limited use. See Chapter Four, "Guidelines for Selection of Repair Method," for other limitations.

MAXIMUM ALLOWABLE STRAINS

It is recommended that primary tension member areas having more than 5 percent nominal strain due to accidental damage shall not be straightened unless the straightened elements are fully strengthened by adding additional splice material. Member areas having nominal strains equal to or less than 5 percent but more than 15 times the yield point strain shall not be straightened when these strains occur at severe fatigue critical areas. Severe fatigue critical details are defined as AASHTO stress categories lower than C. If severe fatigue critical details are present, the member element shall be strengthened. As a minimum, 50 percent additional area should be added. This minimum addition is based on the simple premise that if the member was initially designed for a working stress of about 0.5 Fy, the straightened member element could be neglected entirely and the maximum stress would not exceed Fy. All primary tension member areas in severe fatigue critical areas with less than or equal to 15 times the yield point strain may be straightened. The preceding strain limitations apply to primary tension members or primary members with tensile areas. No limitation on strain is placed on compression members and tension or compression secondary members.

Figure 1 shows the method used to compute radius of curvature for members with maximum curvature equal to or less than 15 times the yield point strain. Table 1 gives the minimum radii of curvature for various plate widths for maximum strains not to exceed 15 times yield point strain. Table 2 shows minimum radii of curvature for various plate widths for maximum strain not to exceed 5 percent.

RADIUS OF CURVATURE AT YIELD POINT STRAIN

Check member or member element curvature. It is not recommended to straighten areas where the bend radius is greater than $R = WE/2Fy$, where W is the flange or member width, E is the modulus of elasticity, and Fy is the yield point stress.

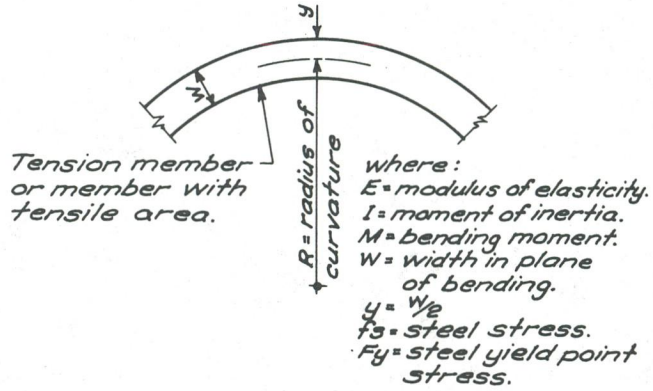

Radius of curvature, $R = \frac{EI}{M}$

$fs = M(y)/I$; $M = I(fs)/y$ $\therefore R = \frac{EI(y)}{Ifs} = \frac{E(y)}{fs}$

strain $= f/E$; and $\therefore R = \frac{y}{f/E}$ $\therefore R = \frac{WE}{2fs}$

Maximum strain $= \frac{*15\,Fy}{E}$

A-7 steel, $R = \frac{y}{15(33{,}000)/29{,}000{,}000} = \frac{y}{0.017069}$

A-36 steel, $R = \frac{y}{15(36{,}000)/29{,}000{,}000} = \frac{y}{0.0186207}$

Low Alloy steel, $R = \frac{y}{15(50{,}000)/29{,}000{,}000} = \frac{y}{0.0258621}$

A-7 steel; $R = W/0.034138$

A-36 steel; $R = W/0.0372414$

Low Alloy Steel ($Fy = 50$ Ksi); $R = W/0.0517242$

*15 Fy is suggested limit based on AISC (8).

Figure 1. Radius of curvature at 15 times yield point strain.

Table 1. Minimum radii of curvature.

A-7 Fy = 33,000 psi		A-36 FY = 36,000 psi		Fy = 50,000 psi	
W (in.)	R (ft.)*	W (in.)	R (ft.)*	W (in.)	R (ft.)*
8	20	8	18	8	13
9	22	9	20	9	14
10	24	10	22	10	16
11	27	11	25	11	18
12	29	12	27	12	19
13	32	13	29	13	21
14	34	14	31	14	23
15	37	15	34	15	24
16	39	16	36	16	26
17	41	17	38	17	27
18	44	18	40	18	29
20	49	20	45	20	32
22	54	22	49	22	35
24	59	24	54	24	39

* Minimum radius of curvature for maximum strain not to exceed fifteen times yield point strain. For tensile members or members with tensile areas. This table does not apply to secondary members or compression members.

Table 2. Minimum radius of curvature.

W (in.)	R (ft.)*
8	7
9	8
10	8
11	9
12	10
13	11
14	12
15	13
16	13
17	14
18	15
20	17
22	18
24	20

$$R = \frac{y}{f/E}, \quad \text{strain} = \frac{f}{E} = 5 \text{ percent}$$

$$\text{Then } R = \frac{y}{0.05}, \quad y = \frac{W}{2}$$

$$\text{Then } R = \frac{W}{0.1}$$

* Minimum radius of curvature for maximum strain not to exceed five percent nominal strain.

These areas have not been plastically deformed and straightening these areas will be counter productive and may result in reverse bending. These members should return to their original position when adjacent plastically deformed members have been straightened. Table 3 gives the radii of curvature at yield point strain for members of various widths for A-7, A-36, and low alloy steels.

CALCULATION OF DAMAGE CURVATURE

The assessment of damage to a member and selection of the repair method can best be accomplished from accurate inspection information. A sufficient number of measurements must be made to apply the proposed guidelines. The assessment process should provide information that can be used to select the appropriate repair procedure. The assessment calculations of damage to a steel member should provide the curvature and/or rotation in radians, the minimum radius of curvature, the direction of curvature, the areas in which the direction of curvature reverses, and the radii of curvature at sufficient points along the displaced member. This information can then be used to determine those areas where straightening is required, in addition to the amount of straightening required within any particular length of the damaged member. This information will prove useful in all repair methods.

The following incremental method will define the required curvature characteristics of a damaged steel member. Deflection offsets should be measured at equal increments along the length of the damaged member.

These measurements should be made from a taut stringline

Table 3. Radius of curvature at yield point strain.

A-7 Fy = 33,000 psi		A-36 Fy = 36,000 psi		Fy = 50,000 psi	
W (in.)	R (ft.)	W (in.)	R (ft.)	W (in.)	R (ft.)
8	293	8	269	8	193
9	330	9	302	9	218
10	366	10	336	10	242
11	403	11	369	11	266
12	440	12	403	12	290
13	476	13	436	13	314
14	513	14	470	14	338
15	549	15	503	15	363
16	586	16	537	16	387
17	622	17	571	17	411
18	659	18	604	18	435
20	732	20	671	20	483
22	806	22	738	22	532
24	879	24	806	24	580

that describes the member location prior to displacement. It is recommended that an incremental length of 12 in. be used for an element such as a girder or truss member. For local distortions such as sharp flange bends or web indentations, where bends occur over short lengths, the increments should be in the range of 2 to 4 in. The measurements should be made with a rule graduated in one-hundredth inch increments, and careful measurements are required.

Figure 2 shows the measured displacements for a portion of a damaged steel girder. An equation based on the difference in slopes between incremental points is shown that gives the radius of curvature at each incremental point. By solving the equation for Points 1 through 11, it is seen that the direction of curvature is defined, along with the radius of curvature at each point. The calculated values of the radii and the direction of curve are shown on the deflection diagram. It is seen that the deflection curve reverses between Points 1 and 2, and Points 9 and 10. At Point 8 there is no curvature. At Point 6, the point of impact, the minimum radius of curvature is approximately 15 ft. The maximum radius of curvature (other than tangents) occurs at Points 3 and 4 and is approximately 600 ft. The difference in slopes gives the radians of curvature at each incremental point. Thus, it can be seen that this method provides the needed curvature information to more objectively select an appropriate repair procedure. Experience and/or conditions may greatly reduce the number of measurements required for a specific damage. However, the use of this assessment method should result in a more successful engineering solution to damage repair work. The incremental method is approximate since the increments are finite and because the incremental length is assumed to be equal to the arc length. However, by using 12-in. increments, and because of the relatively small angles of rotation, the approximation is close to the actual.

NICKS AND GOUGES

Nicks and gouges shall be carefully described and photo-

graphed. Superficial nicks and gouges can be repaired by grinding smooth. More serious damages to weldable steel can be repaired by welding. More serious damages of nonweldable steel can usually be repaired by adding bolted splices. Requiring partial replacement due to nicks and gouges is rare. The distinction between superficial and serious shall be made by stress calculations.

CRACKS

Crack assessment must be preceded by a detailed inspection to locate the cracks and determine their length and width. Visual inspection is always the first step, supplemented with magnetic particle, or dye penetrant. Impact cracks are usually surface connected and ultrasonic testing is not generally necessary. The stress and shock of impact will sometimes cause cracking well away from the area of principal damage. Look for spalling of paint or scale as an indication that some unusual strain has occurred at such locations and use as a guideline for areas of detailed inspection. Visual examination is not limited to these areas, however, since a crack may occur in areas that were shock loaded but were not strained enough to spall the paint or scale. Visual inpsection shall be supplemented with magnetic particle inspection in suspect areas. Particular attention should be given to the examination of the toes of butt and fillet welds in areas subjected to damage as this is an area where cracks often occur.

Visual inspection alone may not determine the full length of the crack. Sometims a crack may be hidden by scale, rust, or paint. Use one of the other inspection processes to support visual inspection. These other inspection processes can delineate the crack precisely or discover "hidden" cracks. Remove paint around restraining details that may be crack initiation sites and magnetic particle inspect.

Field inspection for cracks is done by magnetic particle, dye penetrant, and occasionally ultrasonic inspection. The first two are the easiest to use and require simple and inexpensive equipment. Dye penetrant inspection detects only cracks that are exposed to the surface. Such an inspection should be adequate as all cracks resulting from impact damage should be open to the surface. Ultrasonic inspection is a good method for detecting cracks in limited areas, but it requires a highly trained operator, expensive equipment, and a smooth surface on which to apply the ultrasonic transducer, and the results may be influenced by proximity to other attached members or detail parts. It is not generally suitable for overall inspection. Even though ultrasonic inspection is difficult to use, some engineers have been very satisfied with ultrasonic inspection and prefer this method. Internal and hidden cracks can be detected by ultrasonic inspection. After the crack is delineated, strong consideration should be given to drilling a temporary stop hole at the crack end. The decision should be based on an estimate of extent of crack propagation and resulting danger prior to crack repair. Drill a 1/2-in. to 3/4-in. hole ahead of the surface indication of the crack limit to ensure the crack goes into the hole. Crack size is not a controlling factor when the crack is caused by accidental damage, and the crack is subsequently fully repaired and inspected. However, the curvature strain should not exceed the "Maximum Allowable Strains" criteria in this chapter. Cracks in primary tension members may be repaired by welding, provided the steel is weldable and Charpy impact values meet

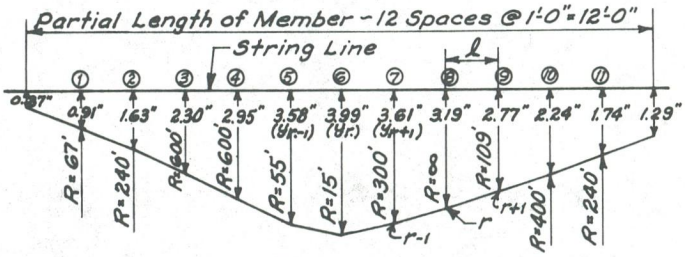

Measured Offsets and Calculated Radii

$$\left(\frac{d^2y}{dx^2}\right)_r = \frac{1}{\ell}\left[\frac{(y_{r+1}-y_r)}{\ell} - \frac{(y_r-y_{r-1})}{\ell}\right]$$

Difference in Slopes (Radians)

$$\frac{d^2y}{dx^2} = \frac{1}{R}$$

$$\therefore \frac{1}{R} = \frac{y_{r-1}+y_{r+1}-2y_r}{\ell^2} \text{ or } R = \frac{\ell^2}{y_{r-1}+y_{r+1}-2y_r}$$

where ℓ = incremental length
r = point on member
y = measured offset from stringline
R = radius of curvature at point r

$$\ell = (R)(\text{Difference in Slopes})$$

$$\frac{1}{R} = \frac{\text{Difference in Slopes}}{\ell}$$

where ℓ = incremental length, assumed to be equal to an arc length of a circle with radius R.

For Point 6: $\frac{1}{R} = \frac{3.58+3.61-(2)(3.99)}{(12)(12)}$

$R = -182.28$ inches
$= -15.19$ feet

Figure 2. Calculation of damage curvature.

AASHTO specifications. Welds should extend slightly ahead of the crack tip to remove the fracture process zone. The scope of this manual is limited to the assessment of damage and repair of cracks caused by accidental damage. The impact forces that caused the cracking are removed almost instantaneously following impact. However, when inspecting accidental damage, cracks may be discovered that are the result of nonaccidental damage, such as fatigue. All cracks that are discovered should be fully assessed, and the cause of the crack should be determined. Material toughness, crack size, and stress level are primary factors affecting brittle and fatigue fractures. Fisher et al. (*19*) and Rolfe and Barsom (*31*) are sources of information related to fracture and fatigue control. Most cracks in compression members and in secondary members can be successfully repaired by welding. Visual inspection with 10X magnification, dye penetrant, magnetic particle testing, and ultrasonic testing should all be used, as appropriate, to determine width, depth, and length of cracks.

Judgment based on agency experience must be a part of damage assessment of cracks. Some agencies have a successful history of crack repair. The guidelines for repair of damage by welding in this report place a strong emphasis on high-quality welding, nondestructive testing, and close inspection.

CHAPTER FOUR

GUIDELINES FOR SELECTION OF REPAIR METHOD

The purpose of these guidelines is to arrive at the best repair solutions for any individual damage incident. A combination of repair methods may result in the best repair solution. Damage assessment and repair of damage are interrelated. Anyone inspecting or assessing damage should thoroughly study Chapter Five, "Guidelines for Repair of Damage."

FLAME STRAIGHTENING

This repair method does not significantly degrade steel properties and should be considered for the repair of all bent members with the following exceptions:

1. Do not flame straighten fracture-critical members unless the flame-straightened area is fully supplemented by bolted splicing.
2. For primary tension members, see Chapter Three, "Guidelines for Assessment of Damage," "Maximum Allowable Strains."
3. Do not flame straighten members when the radius of curvature in the plane of bending is more than $WE/2Fy$ where W is member width, E is the modulus of elasticity, and Fy is the yield point. However, any deviation from the required alignment after removing all external forces can be assumed to have resulted from yielding and can be straightened.
4. Do not attempt to flame straighten excessively wrinkled plates or plates with excessive kinks. It is nearly impossible to flame straighten this type of damage.
5. There is evidence to indicate that A-514 and A-517 steels, which are quenched and tempered, can be flame straightened without degrading steel properties. However, there are serious reservations. The steel must not be allowed to reach a temperature higher than the tempering temperature, which is approximately 1,150 F. In addition, Pattee et al. (*12*) states that prolonged heating at lower temperature can also promote the formation of brittle microstructures. Rothman et al. (*10*) states that quenching of these steels should be employed as a part of the flame-straightening process for plates under stress. These steels are hardenable and quenching must be followed by tempering to avoid serious degradation. Rothman (*18*) concludes that the study shows that there is a strong indication that quenched and tempered steel plates used in shipyard construction can be straightened with no unacceptable loss in mechanical properties.

Flame straightening of A-514 and A-517 steels shall not be used as a normal procedure. Where other repair methods that give greater assurance against degradation are not possible, flame straightening of these steels must be approached with caution and with a thorough knowledge of the adverse metallurgical consequences that can occur due to improper straightening procedures. Very little A-514 and A-517 steel has been used in highway overpasses throughout the country. The nonuse of flame straightening to repair these steels would have a very minor effect on repair of accidentally damaged steel bridges.

HOT MECHANICAL STRAIGHTENING.

This is a process where heat is applied to all sides of a bent member, and while the member is still hot it is straightened by applying force. Agencies that use this method restrict the maximum temperature to 1,200 F. as reported by Mishler et al. (*11*). The results of this type of straightening are unpredictable. When the radius of bending curvature is small and concentrated in one location, hot straightening may result in a series of buckles occurring in the heated zone. When the radius of curvature is relatively large, hot straightening may result in a member with a series of smaller curves, depending on the number of heating points. Mishler and Leis (*11*) conclude that hot mechanical straightening probably should not be performed on quenched and tempered steels, because heating could degrade ductility and toughness. Degradation may result from excessive bends or wrinkles. It is believed that flame straightening is a superior method and should be used in lieu of hot mechanical straightening for all primary tension members. Hot mechanical straightening may be used on primary compression members or secondary members provided the operators have the skill to produce results that are free of wrinkles, cracks, bulges, and poor alignment.

COLD MECHANICAL STRAIGHTENING

Cold mechanical straightening is a process where an accidentally bent member is straightened by applying force. No heat is used. Mishler and Leis (*11*) give a good discussion of the degradation that may result when cold mechanical straightening is used. They point out the complexity of determining degradation effects.

The amount of plastic strain and the number of strain cycles are the two most important factors affecting the degradation of steel due to cold mechanical straightening. Cold straightening a bridge member may result in one complete cycle. It is believed that a bridge member can be cold straightened once without causing significant degradation, provided the plastic strain is limited to 5 percent nominal strain. See Chapter Three, "Guidelines for Assessment of Damage," "Maximum Allowable Strains." No limitation on amount of strain is placed on primary compression members or secondary members. However, as the amount of strain increases, it will become increasingly difficult

to cold straighten members without seriously reducing toughness and ductility and inducing wrinkles, kinks, or cracks. Plastic curvature at the ends of restrained members may be very difficult to cold straighten. Cold mechanical straightening shall not be applied to member areas that have cracks, nicks, or gouges. Cold mechanical straightening should not be applied to members with low Charpy impact values. Low Charpy impact values are defined as those values that do not meet current AASHTO specifications. The effect of low temperature on Charpy impact values shall be considered when cold mechanical straightening is performed. The degradation effect of cold straightening members that are twisted or rotated is unknown. It is not recommended that twisted or rotated members be cold straightened.

WELDING

Welding may be used for several types of repair, including: defect or crack repair, welding replacement segments into place, and adding straightening plates by welding. Poorly executed weld repairs in tensile areas can be very dangerous and in some instances may do more harm than good.

The steels to be repair welded shall be weldable steels. These steels include A-36, A-441, A-572, and A-588. Some agencies may have attained the expertise to effectively weld less weldable steels such as A-7, A-242, and A-440. Welding repair of A-514 and A-517 steel is not recommended. Welding repair of fracture critical members is not recommended. Welds located in compression stress regions are not fatigue susceptible provided the stress is always compression (Fisher et al., *19*). Although cracks may form at a detail in a residual tensile stress region of a compression member, these cracks will not propagate beyond that region and do not adversely affect the member's load-carrying capacity. Cracks in compression members generally are not fatigue cracks. Weld repairs located in compression areas of weldable steels should be satisfactory.

Do not weld members with low Charpy impact values. Low Charpy impact values are those values that are lower than current AASHTO requirements. Preferably do not weld in extremely cold weather (below 32 F) when Charpy impact values are low.

BOLTING

Bolting may be used as a repair method or as a supplement to other repair methods. Replacement of a damaged element with a new piece of steel fastened with high-strength bolts is regarded as the safest method of repair. Replacing damaged riveted elements with bolted material may not be excessively difficult and should be considered. Adding bolted splice material to welded members generally is difficult, time consuming, and expensive. A combination of welding, and bolting at plate ends, may be an attractive solution for weldable steels, as shown in Albrecht et al. (*30*) (see Figs. 59, 61, and 62). Figures 59 and 61 illustrate that additional splicing with high-strength bolts may be used to improve stress categories. Fracture critical members should be repaired by bolting or repaired by other methods and fully straightened by adding new bolted material. Tensile areas of A-514 and A-517 steels should be repaired by bolting. Members that do not meet the qualifications for flame straightening will normally require bolted splices.

PARTIAL REPLACEMENT

In some instances damage will be so serious that partial replacement is necessary. These damages include excessively wrinkled plates, excessive deformations and bends, tears in member elements, and large cracks.

Partial replacement will normally consist of removing the damaged area and replacement with either a welded insert or a bolted splice insert. Welded inserts should meet the criteria given in this manual. The steel must be weldable and Charpy impact values must be equal to or better than AASHTO requirements. Welded inserts are not recommended for fracture critical members. Partial replacement by bolting and welding is an acceptable method, provided the longitudinal web weld is located in a compression area. This partial replacement can be used for any appropriate situation provided the web is weldable in a shear-compression area. The web could also be spliced by bolting instead of welding.

Partial replacements can be used in conjunction with other repair methods, such as flame straightening. For example, a bent member with a crack could be flame straightened and the crack repaired by a bolted splice.

COMPLETE REPLACEMENT

Complete replacement of a member is normally the most expensive method of repair. Replacing a girder will require removing a portion of the roadway slab. If the girder is continuous, more than one span length may have to be removed, or new bolted or welded splices introduced. Removal of truss members will require tension ties or compression posts to carry all loads during replacement. Jacking may be required to obtain the correct distance between end connections. Joint rotations resulting from the damage will increase replacement difficulty.

If a member is excessively damaged throughout its full length, replacement may be the only alternative. Other less difficult methods of repair should be carefully studied prior to selecting complete replacement.

COMBINING METHODS OF REPAIR

In selecting method of repair for a member, using a combination of repair methods should be considered. Flame straightening may be combined with welding of cracks, nicks, or gouges. Flame straightening may be combined with bolting. Bolting may be combined with welding.

STRENGTH OF REPAIR METHOD

A distinction is made between fracture critical and nonfracture critical members or elements. Fracture critical members should be repaired by methods that unquestionably restore full strength. These methods may include bolted splices, partial replacement by bolting, and full replacement. All loading conditions, including service load, overload, and ultimate load, should be fully restored, and the service life should be fully regained.

Nonfracture critical members may be repaired by the same methods used for fracture critical members. However, other less

costly methods should also be considered and used as appropriate. These methods include mechanical straightening, hot straightening, flame straightening, welding and bolting. All strength conditions and service life shall normally be fully restored.

EFFECT OF TOUGHNESS ON REPAIR METHOD CRITERIA

There is justifiable concern regarding the relationship between steel toughness and repair of damaged steel members. Toughness is the ability of a steel to absorb energy under suddenly imposed stresses (impact conditions) by deforming plastically prior to fracture. The measure of this ability (at a high rate of loading) is called impact strength. Notches or stress concentrations such as inside corners, changes in section size, holes, and threads are present in nearly all structures. Notches are a natural occurrence of fabrication, caused for example, during joining by welding. Notches create stress concentrations and can initiate failure in a structure if they are not properly accounted for during design and material selection. If a steel is to resist brittle fracture during impact loading, it must have the ability to absorb considerable energy, particularly at points of stress concentration. Ability of steel to absorb impact energy in the presence of a notch is called impact notch toughness. The term toughness means impact notch toughness in this report. Brittle fracture can occur at stress levels below normal design values when steel is subjected to impact loads at comparatively low temperatures. Metal toughness must be considered for all repairs.

Low Charpy impact values are defined as those values that are less than currently specified by AASHTO specifications. Compression members with low Charpy impact values can be repaired in accordance with the same criteria used for adequate Charpy impact values. Criteria for repair of steel subject to design tensile stresses and having low Charpy impact values include the following:

1. Fracture critical members require special methods of repair. See section on "Use of Bolted Splices," in Chapter Five.
2. Bolted repairs may be used.
3. Properly executed flame straightening does not significantly affect toughness of any bridge construction steels with the possible exception of A-514 and A-517 steels and may be used for members or portions of members that have not cracked.
4. Do not repair cracks or notches by welding alone. Areas that have cracks or notches may be repaired for durabiity (i.e., corrosion resistance) by welding, but should have full strength restored by splicing with high-strength bolted splices.
5. Secondary members can normally be straightened by hot or flame straightening or a combination thereof.

Adequate Charpy impact values are defined as those values that meet current AASHTO specifications. Criteria for repair of steel with tensile stresses and adequate Charpy impact values include the following:

1. Fracture critical members require special methods of repair. See "Bolting."
2. Bolted repairs may be used.
3. Properly executed flame straightening may be used except for A-514 and A-517 steels. However, do not attempt to flame straighten at a point that has a crack or notch.
4. Repair of cracks and notches by welding of weldable steels may be used with the exception of A-514 and A-517 steels. Included in the steels normally considered to be weldable are A-7, A-36, A-441, A-572, and A-588. do not weld during temperatures below 32 F, when Charpy impact values are low.
5. Secondary members can normally be straightened by cold or hot mechanical straightening, flame straightening, or a combination thereof.

DURABILITY OF REPAIR

Durability of repair must be given a high priority. All methods of repair should have durability equal to or better than the original member. The accessibility of all parts of a repaired structure for inspection, cleaning, and painting shall be accomplished by the proper proportioning of repairs and the design of their details. Closed sections, and pockets or depressions that will retain water, shall be avoided. Pockets shall be provided with effective drain holes or filled with waterproofing material. It is very important that nonpainted weathering steel be free draining. Details shall be arranged so that the destructive effects of bird life, the retention of dirt, leaves, and other foreign matter will be reduced to a minimum. AASHTO specifications contain information pertaining to seal welds, maximum pitch of sealing fasteners, and the maximum edge distance for fasteners. Seal welds should meet all requirements of the specifications because they transmit stress and may embrittle the base metal.

RELATIVE COST

The cost ratio of repairing in-place to total replacement will vary from less than 10 percent to nearly 100 percent. All damage such as nicks, gouges, and cracks will be much less expensive to repair in-place assuming that repair in-place is appropriate. Members that have been plastically deformed can normally be straightened at a small fraction of the cost of replacement. Holt (*20*) states that flame straightening of major bridge members can be accomplished for as little as 5 percent of replacement costs. He further states that easily replaced members can be repaired by flame straightening for 65 percent of the replacement costs. Moberg (*15*) states that flame straightening will usually cost about one-third to one-half as much as complete replacement. Mishler and Leis (*11*) give cost data for flame straightening the Lewis River truss bridge in Washington State, which was severely damaged when a large piece of machinery broke its binder chains and hit a vertical truss member. Flame straightening cost $7,500. It was estimated that replacement would have cost $18,000. It is believed that where the use of flame straightening is appropriate, a major cost savings can be realized.

Members with excessively wrinkled plates or tears will normally require partial replacement. Partial replacements are usually less expensive than total replacements. Partial replacement of girders can usually be effected without removing the concrete slab over the top of the girder.

Replacement of an entire bridge member is both costly and time consuming, and in addition it is usually a complex oper-

ation. The entire replacement of a steel truss member or the entire replacement of a plate girder may also induce stresses that are difficult to analyze. Items that affect the cost of replacing girders include:

1. Length and size of girder.
2. Amount of roadway slab removed.
3. Removal of curb or sidewalk.
4. Simple or continuous span.
5. The necessity for temporary supports.
6. Working access and traffic closure hours.
7. Traffic control.
8. Climate (winter undesirable—most agencies).

It is recommended that a cost estimate be made for the repair of each damage incident. Actual costs should be recorded for aid in making future cost estimates. Cost should be a major consideration in the selection of a repair method.

AESTHETICS

The methods of restoring strength covered in these guidelines should give acceptable aesthetic details. Welding, straightening members, adding splice plates, partial or full replacements, should all give acceptable aesthetic quality. It is assumed that the new material would be painted to match the existing steel. Replacing a portion of a weathering steel girder might not give an immediate color match. This situation should be resolved by considering the necessary aesthetic quality for each specific case.

REPAIR METHOD TO CONSIDER

Selection of the repair method should be based on an objective analysis. The selection of an appropriate repair method is related to material properties, the type of member, and the type of damage. Table 4 has been developed to assess differences between repair methods caused by these factors, and is intended as a guide in the selection process. For example, a weldable steel may be welded and/or flame straightened. A nonweldable steel may be flame straightened but not welded. Important factors that apply to all repair methods such as relative cost, user inconvenience, durability, and strength are not included in this table. Table 4 should be used in conjunction with all other factors that will affect the final repair method selection.

Table 4. Repair method to consider. (Note: Tensile areas of flexural members are treated the same as tension members.)

Damage Assessment Factors	Repair Method to Consider								
	Flame Straightening	Hot Mechanical Straightening	Cold Mechanical Straightening	Welding	Flame Straightening Supplemented by Bolting	Field Welding Supplemented by Bolting	Bolting	Partial Replacement	Full Replacement
Weldable Steel	Yes	Yes	Yes	Yes	Yes	Yes	Yes	Yes	Yes
Non-Weldable Steel	Yes	Yes	Yes	No	Yes	No	Yes	Yes	Yes
Low Charpy Impact Values	Yes	No	No	No	Yes	No	Yes	Yes	Yes
Adequate Charpy Impact Values	Yes	Yes	Yes	Yes	Yes	Yes	Yes	Yes	Yes
Fracture Critical Member	No	No	No	No	Yes	Yes	Yes	Yes	Yes
Primary Tension Member	Yes	Yes*	Yes*	Yes	Yes	Yes	Yes	Yes	Yes
Secondary Members	Yes	Yes	Yes	Yes	Yes	Yes	Yes	Yes	Yes
All Compression Members	Yes	Yes	Yes	Yes	Yes	Yes	Yes	Yes	Yes
Tearing and Excessive Wrinkles	No	No	No	No	No	No	No	Yes	Yes
Primary Tension Member Curvature Strain Meets Guidelines	Yes	Yes*	Yes*	Yes	Yes	Yes	Yes	Yes	Yes
Primary Tension Member Curvature Strain Does Not Meet Guidelines	No	No	No	No	Yes	Yes	No	Yes	Yes
Member Curvature Radius More than $\frac{WE}{2Fy}$	Member will return to correct position when adjacent members or joints are straightened								
Cracks - Weldable Steel	Yes	No	No	Yes	Yes	Yes	Yes	Yes	Yes
A-514 and A-517 Steel	No	No	No	No	Yes	Yes	Yes	Yes	Yes
Superficial Nicks and Gouges	Grind defect smooth								
Nicks and Gouges Weldable Steel	No	No	No	Yes	No	Yes	Yes	Yes	Yes

* Flame straightening is recommended.

CHAPTER FIVE

GUIDELINES FOR REPAIR OF DAMAGE

OFFICE RESPONSIBLE FOR REPAIR METHOD

The best and most consistent repair procedures will result when the same office is responsible for assessment of damage and repair of damage. In many states, district or regional offices inspect damage and make repairs. The headquarters bridge office is consulted for severe or unusual damage. Where responsibility is divided, close cooperation is needed to ensure consistently good repair procedures.

ACCOMPLISHMENT OF WORK BY STATE FORCES OR CONTRACTOR

It appears that the best results, lowest cost, and most prompt action are attained by state forces. It is recommended that state forces accomplish the work in all states that have enough damage work to efficiently use the needed equipment and personnel. Personnel may perform other engineering functions when they are not repairing damage. States should be selective in choosing

outside contractors. Several eastern states use the same highly regarded contractor. When repair work is accomplished by contract, the specifications of the contract should stipulate the experience and competency requirements for bid submittal. Contract specifications should include provisions to assure quality control of the contract work. As a minimum, those items of work that should be subject to inspection monitoring are listed under "Repair Inspection" in this chapter. Effort needs to be expended to ensure that qualified contractors perform bridge repair work.

EQUIPMENT REQUIRED

Specialized equipment is needed for each method of repair. However, there are general types of equipment that are usually needed for all repair work. Good access to the damaged area is required. Agencies that do their own repair work generally have a hydraulically operated platform mounted on a truck. The simple access provided by free-standing scaffolding may be entirely adequate. In determining access, the high and low work elevations and foundation condition under the work area are important access considerations. The least expensive means of good access should be used.

Exhibit 1, "Minimum Equipment Necessary to Initiate Repairs With a Single Crew," is the equipment assembled at the work site by the New York State Department of Transportation.

Exhibit 1. Minimum equipment necessary to initiate repairs with a single crew. If more than one crew is used in the work, additional equipment will be required. Expendables must be replaced as the work progresses.

The following equipment should be assembled at the work site at the beginning of the repair:

1—Platform Truck, adjustable height; 8 ft × 8 ft work platform.
2—300-amp DC welding machines.
1—450-CFM Air Compressor. Note: The Compressor is to be used for gouging, chipping, grinding, bolting, and forced air cooling. The Contractor's attention is directed to the provisions of the Occupational Safety and Health Act which limits air cleaning pressure to 35 psi. 100 lb per square inch is required for air cooling. It may be necessary to furnish suitable protective equipment for the workmen during air cooling. (Forced air cooling is optional. The contractor may elect to let the steel cool down without artificial cooling.)
1—Impact Wrench with sockets.
1—Oxyacetylene cutting unit.
1—Air carbon arc gouger (3/8-in. electrode capacity, swivel head unit with 2 air nozzles minimum).
Furnish with 1/4-in. gouging electrodes.
1—High Speed Disc Grinder with extra 9-in. diameter grinding discs.
1—20,000-rpm Pencil Grinder with rotary files and carborundum grinding cones.
2—Propane Heating Torch Units complete with propane and oxygen gauges, 100 ft of hose for each unit, pigtails (manifolds), "T" connections, 4 ft long heating torches equipped with heating tips equivalent to Harris #3H and #5H. Each heating unit should be set up with one, 100-lb tank of propane and two, 240 c.f. (K) tanks of oxygen.
2—25-Ton Hydraulic Jacks (Enerpac Model S-178 or equal), with 2 gallons spare hydraulic fluid.
1—50-Ton Hydraulic Jack (Enerpac Model RC-506 or equal).
1—10-Ton Hydraulic Jack (Enerpac Model RLC-101 or equal).
2—6-Ton Chain Come-alongs.
1—Generator, (3,000 watt minimum, 110 volts).
1—Electrode Drying Oven (Phoenix #300 or equal).
1—Pneumatic Chipping Gun with chisels for slag removal.
6—8 in. × 8 m. × 10 ft Oak Timbers minimum.
1—Chain Saw.
Assorted hardwood wedges.
1—50-lb Hermetically Sealed Container of E70-18 5/32 diameter electrodes.
4—100-lb Tanks of Propane.
16—Oxygen cylinders as described above.
Safety equipment for all workmen, inspectors, etc.
Traffic Control Materials and Equipment

The Washington State Department of Transportation (DOT) includes the following equipment in their flame straightening unit (Exhibit 2).

Figure 3 shows the Washington State DOT truck unit at a job site and one interior view showing some of the equipment.

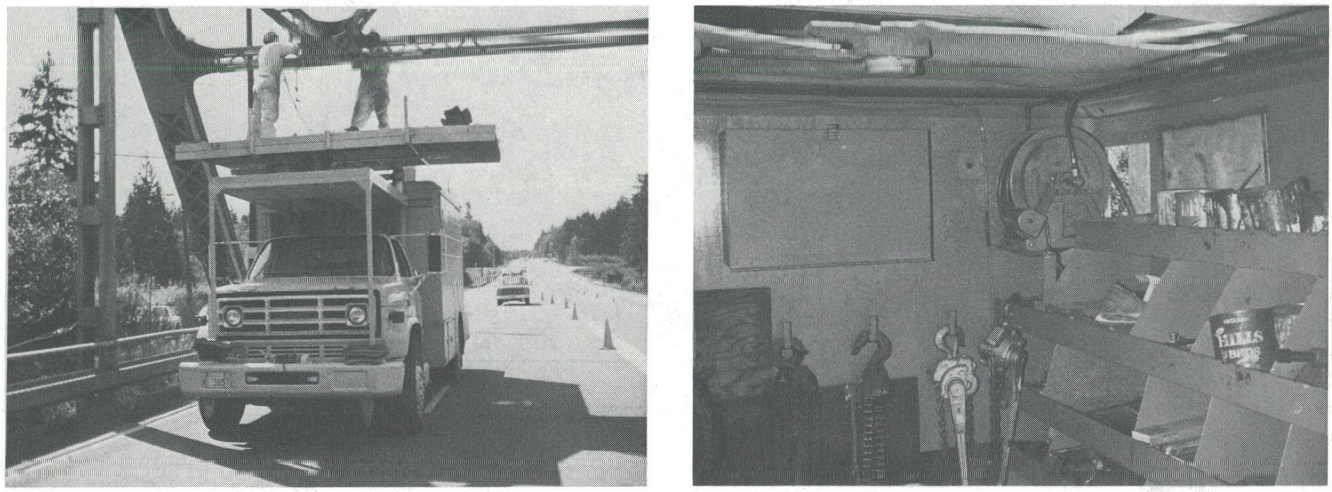

Figure 3. Washington State DOT platform truck. Left photo shows truck at job site; right photo shows interior view.

Exhibit 2.

1—Platform Truck, All Hydraulic Aerial Tower with 25-ft lift. 7 ft × 7 ft nonrotating platform with 2 ft-9 in. × 7 ft sideway extensions and removable 30-in. chain safety railing. Lift unit is operable from the ground and from the platform. The MT 650 Allison Truck Transmission has one S.A.E. power take-off opening. A 110-volt AC, 3,000-watt, 30-ampere auxiliary generator is included. There are holders for 3 sets of oxygen and acetylene bottles with two sets of gauges and two hose reels with 100 ft of quarter-inch hose. An 8,000-lb hydraulic winch with 200 ft of 3/8 × 6 × 37 wire rope is mounted on the front. All bins and trays are of 16 gauge galvanized steel.
2—25-Ton Hydraulic Rams.
6—10-Ton Hydraulic Rams with various strokes.
2—Hydraulic C clamps.
6—Mechanical clamps and Carpenter clamps.
4—3-Ton Chain Come-alongs.
1—1-Ton Chain Come-along.
2—Oxyacetylene Torches. Setup provides for simultaneous operation with two sets of gauges and hoses. Heating tips are National or Victor of various sizes.
12—3/4 in. and 7/8 in. Drift Pins.
1—Air Powered Rivet Gun. Used for peening.
1—Electric Sander Grinder.
1—Air Powered Wrench.
Various lengths of short and long chains with hooks.
Small tools include hammers and sledges of various weights, saws, crowbars, 3/4 in. and 7/8 in. socket, spud, and open end wrenches, pipe wrenches, screwdrivers, pliers, chisels, punches, paint scrapers, wire brushes, paint brushes, wedges, shim plates of various sizes, 2-in. square steel bars of various lengths, carpenter level and angle, and measuring tape.
Safety equipment includes goggles, safety glasses, thick leather gloves, ear protectors, spare hard hats, safety cables and slings, first aid kit, and water and chemical fire extinguishers.
Welding equipment is supplied by District forces that do the required welding work.

FLAME STRAIGHTENING

Fundamentals

General

For any rise in temperature, steel expands, and for any decrease in temperature, steel contracts. The coefficient of expansion is normally expressed as linear. The thermal expansion or contraction of steel is volumetric as well as linear. A valuable application of the principle of thermal expansion and contraction is the ability to modify the dimensions of a steel member by heating the member and at the same time restraining the thermal expansion in one or two dimensions until plastic deformation has resulted. Unrestrained thermal contraction is allowed to occur during cooling. If one or two dimensions are restrained from expanding as a member is heated, plastic flow occurs when the temperature increase is sufficiently large. The restrained dimensions(s) will be less than the normal expansion and the unrestrained dimension(s) will, because of the plastic flow, increase more than the normal thermal expansion (the total volume remains the same). As the member cools, the thermal contraction will be unrestrained and equal to the normal thermal contraction in all three dimensions. The result will be that the restrained dimension(s) will be less than their original value, and the unrestrained dimension(s) will be more than their original value.

By controlling the restraint, the temperature variation, and the number of heating cycles, any degree of dimension modification may be obtained that satisfies the same total volume.

The temperature at which plastic flow will begin is related to yield point and degree of restraint. In addition, any strain due to residual stress of mechanical imposed stresses prior to or during heating will alter the point at which plastic flow begins. If compression is present, the temperature rise to initiate plastic flow is decreased. If tension is present, the temperature rise to initiate plastic flow is increased.

When a confined steel is heated beyond the temperature required to initiate plastic flow and then allowed to cool, the elastic compression is relieved first, followed by tension in the heated zone. Yield strength tension will be achieved if the confined zone is heated to a sufficiently high temperature and allowed to cool and will not exceed this tensile value regardless of how hot it is heated. Yield stress, modulus of elasticity, and coefficient of expansion all vary with temperature.

Single Axis—Perfect Confinement

A steel member that is restrained from expanding in one axis will be subjected to compression strain as it is heated:

$$\epsilon = \alpha \, \Delta \, T$$

where ϵ = strain in in./in.; α = coefficient of thermal expansion in in./in./deg F. and $\Delta \, T$ = temperature rise in deg F. See Figure 4.

$$\Delta = \frac{Pl}{AE}; \ \Delta \text{ also equals } \alpha \Delta T(l)$$

Therefore:

$$\frac{Pl}{AE} = \alpha \Delta T(l)$$

And:

$$\frac{P}{AE} = \alpha \Delta T$$

But:

$$\frac{P}{AE} = \text{strain} = \epsilon$$

Therefore:

$$\epsilon = \alpha \Delta T$$

Single Axis—Variable Confinement

It is useful to briefly review the effect of variable restraint in a single axis. See Figure 5.

Where: σ = stress in the heated zone;
α = free thermal expansion in./in./deg F;
E_c = modulus of elasticity of the cold restraining material, psi;
E_h = modulus of elasticity of the heated zone, psi;
N = ratio of restraining cross section to heated cross section, or $(A + A)/B$;
l = length of heated zone, in.;
$P_B = 2 \, P_A$ and $P_A = P_B/2$
$N = (A + A)/B$
$N = 2 \, A/B$

During heating, B is in compression and A is in tension; after cooling, B is in tension and A is in compression.

$$\Delta B = \frac{P_B \, l}{A_B \, E_h}$$

$$\Delta A = \frac{P_A \, l}{A_A \, E_c}$$

$$\Delta A + B = \frac{P_B \, l}{A_B \, E_h} + \frac{P_A \, l}{A_A \, E_c}; \text{ but } P_A = \frac{P_B}{2}$$

Then:

$$\Delta A + B = \frac{P_B \, l}{A_B \, E_h} + \frac{P_B \, l}{2 \, A_A \, E_c}; \text{ but } \sigma = \frac{P_B}{A_B} \text{ and } P_B = A_B \, \sigma$$

Then:

$$\Delta A + B = \frac{\sigma l}{E_h} + \frac{\sigma \, A_B \, l}{2 \, A_A \, E_c}; \text{ but } N = \frac{2 \, A_A}{A_B} \text{ and } \frac{1}{N} = \frac{A_B}{2 \, A_A}$$

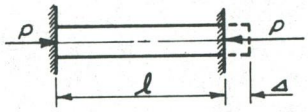

Figure 4. Single axis, perfect confinement.

$$\frac{\Delta A + B}{l} = \frac{\sigma}{E_h} + \frac{\sigma}{NE_c} \text{ but } \Delta \frac{A + B}{l} = \alpha$$

$$\alpha = \frac{\sigma}{E_h} + \frac{\sigma}{NE_c}$$

$$\frac{\alpha}{\sigma} = \frac{1}{E_h} + \frac{1}{NE_c}$$

$$\frac{\sigma}{°F} = \frac{\alpha}{\frac{1}{E_h} + \frac{1}{NE_c}}$$

Assume:

$N = 1$
$\alpha = 0.0000065$ in./in./deg F (may be higher)
$E_c = 29{,}000{,}000$
$E_h = 29{,}000{,}000$ (may be lower)

$$\frac{\sigma}{°F} = \frac{\alpha}{\frac{1}{E_h} + \frac{1}{NE_c}} = \frac{0.0000065}{\frac{1}{29{,}000{,}000} + \frac{1}{(1)(29{,}000{,}000)}}$$

$$\frac{\sigma}{°F} = \frac{94 \text{ psi}}{°F}$$

Assume $N = \infty$

$$\frac{\sigma}{°F} = \frac{\alpha}{\frac{1}{E_h} + \frac{1}{NE_c}} = \frac{0.0000065}{\frac{1}{29{,}000{,}000} + \frac{1}{\infty\ (29{,}000{,}000)}}$$

$$\frac{\sigma}{°F} = \frac{188 \text{ psi}}{°F}$$

Therefore the stress at the point of initiation of plastic flow in the heated zone doubles when restraint is increased from $N = 1$ to $N = \infty$ (based on the assumptions shown).

An approximate method of determinig the minimum temperature rise from normal atmospheric temperatures is shown in Figure 6 for a hot zone restraint ratio of $N = 1$ in A-36 steel. The restraint of $N = 1$ was selected because this is the approximate behavior of a single heated spot in a relatively large surrounding plate and is useful for flattening plates (Holt, *16*). The yield strength curve is based on Figure 7. The modulus of elasticity is assumed to be 29,000,000 psi and the coefficient of expansion constant at 0.0000065 in./in./°F.

$$\frac{\sigma}{°F} = \frac{\alpha}{\frac{1}{E_h} + \frac{1}{NE_c}} = \frac{\alpha E}{2}$$

Assuming a temperature of 500 F, the stress,

$$\sigma = \frac{(0.0000065)\ (29{,}000{,}000)\ (500\text{-}70)}{2}$$

$$\sigma = 40{,}530 \text{ psi}$$

This value is plotted and a line drawn to 0 psi at 70 F. The intersection of this line with the yield-strength curve indicates the approximate temperature to initiate plastic flow. From Figure 6:

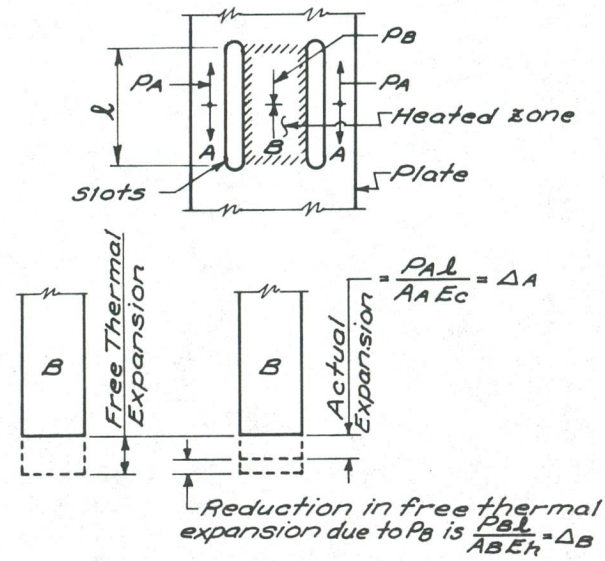

Figure 5. Single axis, variable confinement.

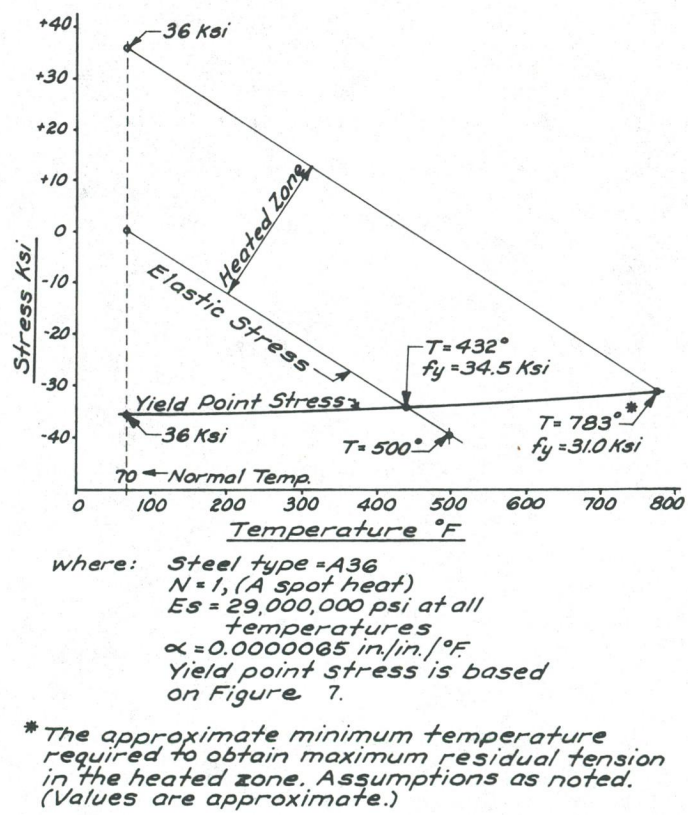

Figure 6. A-36 steel spot heat temperature.

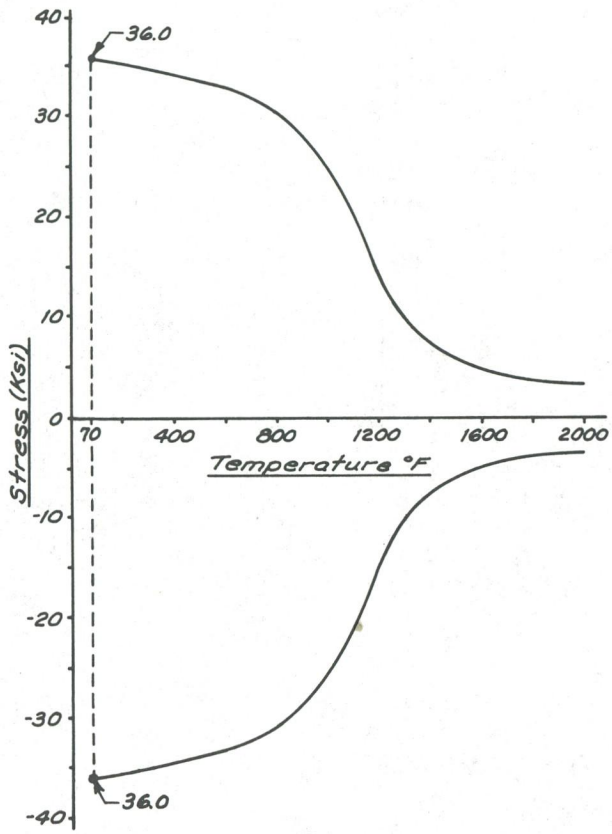

Figure 7. Yield stress versus temperature for A-36 steel.

$$T = 432 \text{ F, and } \sigma = 34.5 \text{ ksi}$$

$$\text{Check; } \sigma = \frac{(0.0000065)\,(29{,}000{,}000)\,(432 - 70)}{2}$$

$$= 34{,}100 \text{ psi}$$

34,100 psi ≅ 34,500 psi from Figure 6.

Now draw a line parallel to the elastic stress line intersecting the 70 F line at + 36,000 psi. This line intersects the yield-strength line at the minimum temperature required to produce yield point residual tension in the heated zone. From Figure 6, this value is found to be approximately 783 F, and σ = 31.0 ksi.

$$\text{Check: } \sigma = \frac{(0.0000065)\,(29{,}000{,}000)\,(783 - 70)}{2} - 36{,}000$$

$$\sigma = 67{,}200 - 36{,}000 = 31{,}200 \text{ psi}$$

31,200 psi ≅ 31,000 psi from Figure 6.

Figure 8 develops curves similar to Figure 6 for steels with 50,000-psi yield strength. The following values were developed from data found in United States Steel Corporation Design Manual ADUSS 27-3400-04:

T – °F	70	300	500	700	900
Fy – ksi	50	46	42	40	35

Values are approximate.

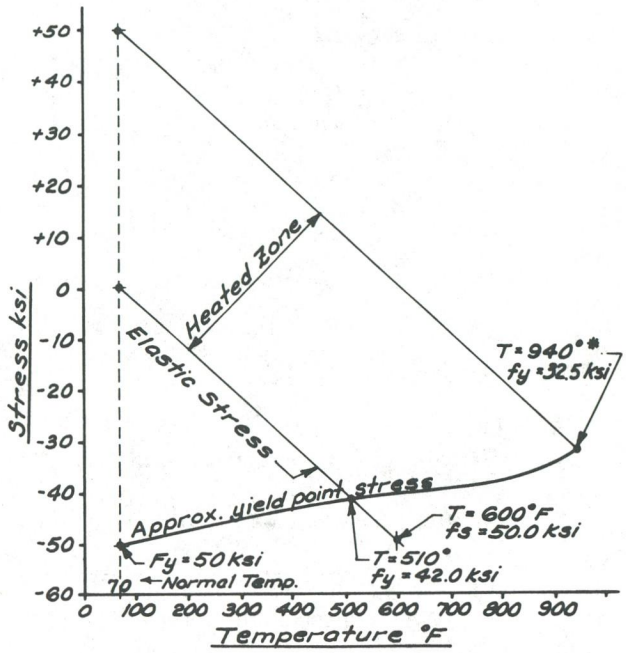

where Steel Type = Fy = 50 ksi
N = 1, (A spot heat)
Es = 29,000,000 psi at all temp.
α = 0.0000065 in./in./°F

*The approximate minimum temperature required to obtain maximum residual tension in the heated zone. Assumptions as noted. (Values are approximate.)

Figure 8. Fy = 50-ksi spot heat temperature.

$$\frac{\sigma}{°\text{F}} = \frac{\alpha\, E}{2}\text{; assuming a temperature of 600 F, the stress}$$

$$= \sigma = \frac{0.0000065\,(29{,}000{,}000)\,(600 - 70)}{2}$$

$$\sigma = 50{,}000 \text{ psi}$$

This value is plotted and a line drawn to 0 psi at 70 F. The intersection of this line with the yield-strength curve indicates the approximate temperature to initiate plastic flow. From Figure 8, T = 510 F, and σ = 42.0 ksi.

Check:

$$\sigma = \frac{0.0000065\,(29{,}000)\,(510 - 70)}{2} = 41.5 \cong 42.0 \text{ ksi}$$

Now draw a line parallel to the elastic stress line intersecting 70 F line at + 50 ksi. This line intersects the yield-strength line at the minimum temperature required to produce yield point residual tension in the heated zone. From Figure 8, this value is about T = 940 F, and σ = 32.5 ksi.

Check:

$$\sigma = \frac{0.0000065\,(29{,}000)\,(940 - 70)}{2} - 50 \text{ ksi} = 32.0 \text{ ksi}$$

32.0 ≅ 32.5 ksi

Figures 6 and 8 demonstrate simplified methods of claculating heating temperatures for spot heats. They are accurate enough for practical use. Variations in modulus of elasticity and coefficient of thermal expansion due to rising temperature have not been included.

Heat Patterns

Spot Heats

All heat patterns begin as a heated spot. A small circular area is heated to a higher temperature than the surrounding steel. The heated zone expands but is restrained by the surrounding steel or a combination of surrounding steel and preload. When the temperature rise is great enough the yield stress of the steel will be reached and the steel will expand in the direction of least resistance. This means that the steel will continue to expand in thickness (upset) but will be restrained from fully expanding in the plane of the plate.

According to Holt (*16*) and Goodier (*21*), the radial and tangential stresses in the hot zone will be compression equal to $0.5\ \alpha(\Delta T)\ (E)$. In the restraining material the radial stress will be compression, but the tangential stress will be tension as shown below:

$$\text{radial } \sigma\, r = \text{c } 0.5\ \alpha\ (\Delta T)\ (E) \left(\frac{a^2}{r^2}\right)$$

$$\text{tangential } \sigma_r = T\, 0.5\ \alpha\ (\Delta T)\ (E) \left(\frac{a^2}{r^2}\right)$$

Where E = modulus of elasticity, a = radius of heated zone, r = radius at which stress is calculated; ΔT = temperature difference between hot zone and restraining steel, α = coefficient of thermal expansion. See Figure 9.

These formulas only apply to the elastic range, with an abrupt temperature drop between the hot and cold zones. This condition does not exist in practice but useful information can be obtained by examining the pattern of the resulting stresses. Plastic flow in the heated zone will follow Figure 6 for A-36 steel and Figure 8 for Fy = 50 ksi steels. The tension and compression applied to the restraining steel will result in plastic flow at a lower temperature difference between the hot and cold areas than is necessary to upset the heated zone. The plastic flow actually initiates in the restraining metal just outside the spot-heated zone. Excessive heat input rates maximize this action and may result in buckling of the plate rather than upsetting the heated spot. The buckling is due to a sharp temperature gradient across the thickness of the material which causes the restraining periphery of the hot zone to upset on only one side and produce a permanent annular bend. Empty pans set on hot burners will buckle due to this action.

Only a few seconds of heating are required for thin steel plates since the hot zone only needs about 783 F for A-36 steel to achieve maximum residual tension. See Figure 6. When proper heating of a spot is accomplished, on removing the heat source, cooling begins and the heated area contracts. The end result should be tension in all directions across the heated area in the plane of the plate.

Heating of a spot should be accomplished with a single orifice torch, heating with a slow circular motion about 1 in. in diameter, on the convex side of the plate. This slow circular motion softens the temperature difference between the heated zone and the restraining area as well as through the material thickness. When this area has reached the required temperature, the diameter of the circular motion may be increased until the desired area is heated. The maximum diameter shall preferably not exceed four times the thickness of the plate; however, the diameter shall not exceed 8 in. for any case (Holt, *16*; Moberg, *15*). Large heat patterns may cause buckling. Always heat spots from the convex side of the material to be straightened since the heated side will upset more than the opposite side. Spot heats are used to remove bulges, dents, and dishes from plates.

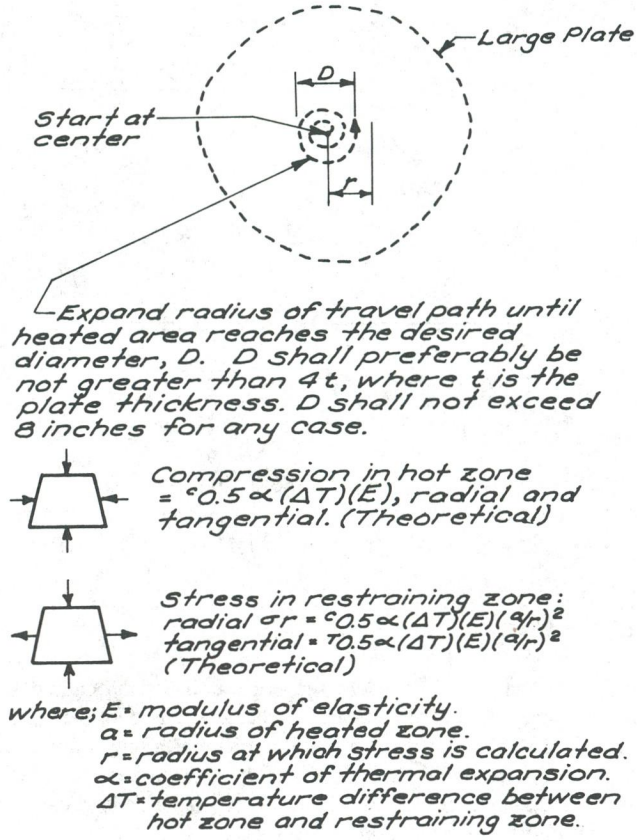

Figure 9. Spot heat.

Strip Heats

Strip heats are elongated spot heats. They are started with a slow circular heating motion to heat a spot. Then the torch is moved in a wave or weave motion along the strip to the desired length of heat. See Figure 10.

Strip heats can be effectively used to remove a single directional bulge in a plate. An example would be a girder web plate that has bulged due to shrinkage of flange to web welds or due to accidental damage. The heat would be applied along the convex side. The thermal stress in a long narrow heat is twice as great transverse to the long axis of the heat as parallel to it. Therefore, the plastic deformation can be controlled to obtain

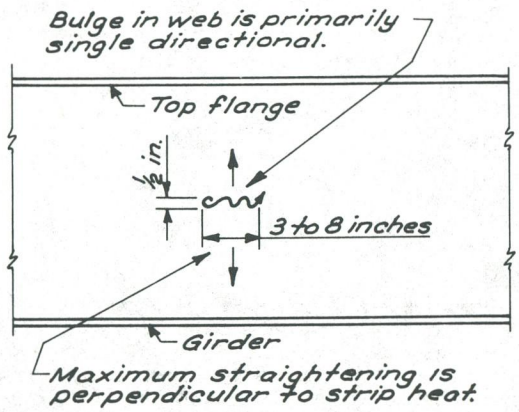

Figure 10. Strip heat.

a pull or tension on cooling, in the desired direction. The approximate temperature rise required for maximum residual stress is obtained from Figure 6 or Figure 8.

Line Heats

A line heat can be used to remove the distortion caused by a weld along a plate, or to straighten accidentally bent members. See Figure 11. Rotation of a plate or member along a line may be achieved by rapid heating along the line on the face to be shortened. After heating the line, there will be little resistance to contracting and rotation will result.

A line heat can be made with any torch; however, large torches may create buckling in thin plates. A single orifice torch is normally used for steel less than 1/2 in. thick. The restraint for the heated zone is furnished by the cold metal ahead of the line to be tracked. The attainment of proper temperature is critical to obtain success. The speed of travel of the torch will largely determine temperature. The best temperature is approximately 1,200 F through the steel thickness. If this heat is achieved with uniform speed of travel, a bend of 1 deg to 3 deg per heat is possible (Holt, *16*).

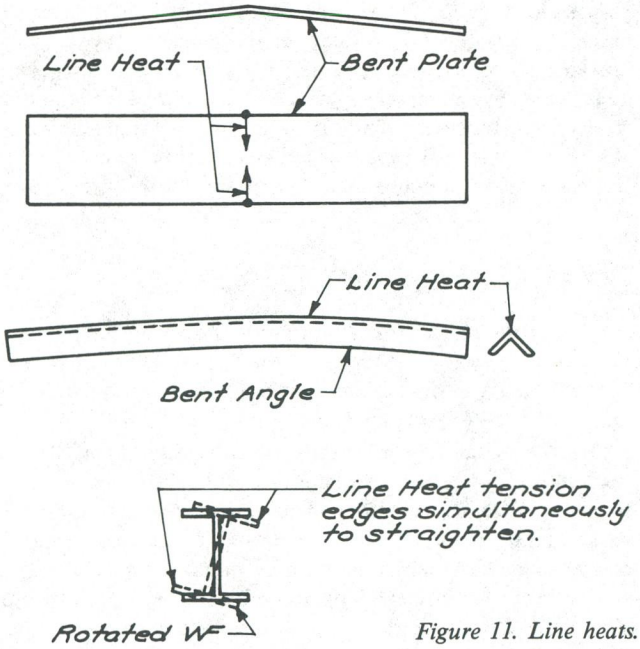

Figure 11. Line heats.

Edge Heats

Edge heats have been used to straighten smooth, gentle bends. The technique used is to apply heat to a strip of uniform width along the full length of the convex edge of the member. Brockenbrough (*22; 23*) studied the heat curving of welded plate girders with heavy flanges. Heat was concentrated at edges and surfaces. New York engineers have advised that they believe edge and surface heating contributes to total camber losses that can continue for months. The most common procedure used to heat curve girders is to apply a series of vee heats. It is believed that vee heating should be regarded as the superior heat pattern for flame straightening bent members. Most accidental damage causes relatively sharp curvature.

Vee Heats

The basic pattern for straightening a bend in steel members is the vee heat. See Figure 12. The boundary of the vee heat should be marked with soapstone. Start heating at the apex with a circular motion until the desired temperature is reached. The maximum temperature shall be 1,200 F for bridge steels consisting of mild steel or low alloy steel with yield points of approximately 33,000 psi to 50,000 psi. Heating above 1,200 F. may cause steel degradation. In addition, heating above 1,200 F is inefficient. Field experience has shown that heating above 1,200 F does not give a corresponding increase in straightening action. Heating to higher temperatures may result in an undesirable combination of hot mechanical straightening and flame straightening.

See "Temperature Indicators" under section heading "Temperature" for temperature indicator guidance. Progress from point A in a serpentine fashion at uniform speed to bring the steel under the torch to the desired temperature. Each heated path must just touch the edge of the previous heated path so that all of the wedge is heated to the proper temperature with no space between these tracks. Never back up or retrace as the heat is made, but continue along in one motion until the edge of the member is reached.

The restraint provided by a member during vee heating consists essentially of two restraint stages. For the first stage, conditions are similar to those for a spot heat. The surrounding material provides compressive restraint. During the second stage

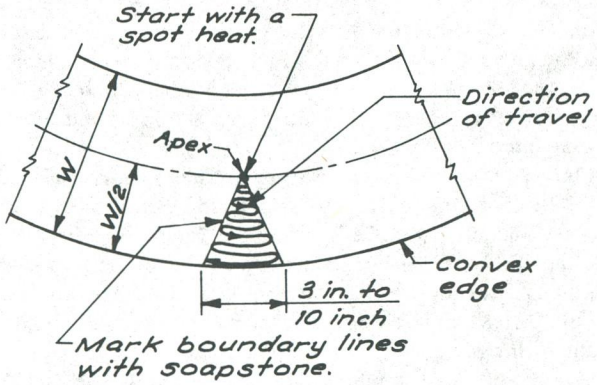

Figure 12. Vee heats.

when the wide part of the vee is being heated near the edge of the member, there is little cold metal left to restrain the expansion. However, during the second stage, the steel at the apex of the vee is cooling. The thermal contractions are sufficient to cause yielding in tension in the cooling region and that action in turn causes yielding in compression in the region being heated. It is this second stage restraint that causes vee heat straightening to be efficient. The necessary development of these restraint stages is the reason that the heat pattern shall not be retraced until the steel has cooled.

The depth of a vee heat can extend over the full depth of an element. However, full-depth vee heats will normally shorten the overall length of a member. It is very rare that shortening is desirable and for straightening members within an existing structure it is unacceptable. Half-depth heats do not cause significant shortening and should normally be used.

Enough heat input shall be used to distribute the heat as uniformly as possible through the thickness of the element. Metal thicker than 1 in. will normally require heating from both sides with two torches working simultaneously. Built-up members are hard to straighten properly due to the difficulty in getting adequate heat across the interface between plates. See Figure 13. It may be practical to remove a partial length of a cover plate to flame straighten the member. After straightening, the partial length cover plate would be replaced and spliced.

The angle of the vee can be varied from a very narrow 10 deg to a very wide 60 deg. The amount of straightening produced increases with an increase in angle. However, as the heat gets wider, the tendency of the heated flange to buckle increases. Stop heating if buckling starts to occur. A buckle must be straightened before further flame straightening of the member can be accomplished. It is recommended that vee heat base widths be not less than 3 in. wide but not more than 10 in. wide (Mishler and Leis, *11*). See Figure 14 for typical combination heat patterns.

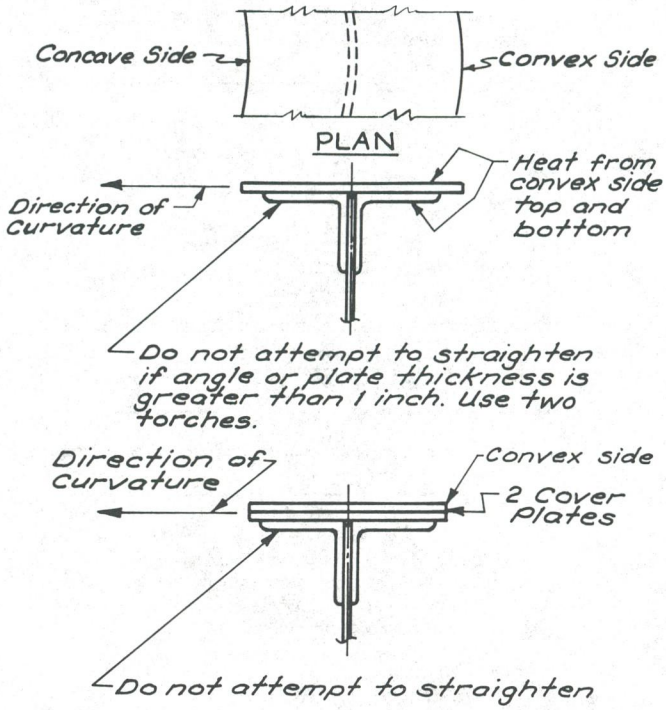

Figure 13. Heating built-up sections.

Camber Adjustment Heat Pattern

Vertical camber adjustments can be made provided the vertical load on the girder is removed. When the bottom flange is in tension, the vertical load should be large enough to produce nominal compression. Camber adjustments are normally made after other damage has been repaired. The recommended heat pattern is shown in Figure 15. The New York Steel Construction Manual (*28*) contains recommendations for heat curving of new bridge members.

Predicting Number and Sizes of Vee Heats

The number and size of heats for early all damage conditions cannot be predicted precisely. However, this lack of precise predictability does not prevent accurate flame straightening of bent members. As the straightening process proceeds, the number, location, and size of heats, and amount of auxiliary force can be modified to give accurate final results. Primary variables affecting amount of straightening per vee heat include initial and final residual stresses and their distribution, member restraint, variations in applying each vee heat, amount of auxiliary force (preload) used, and actual yield point stress of the member.

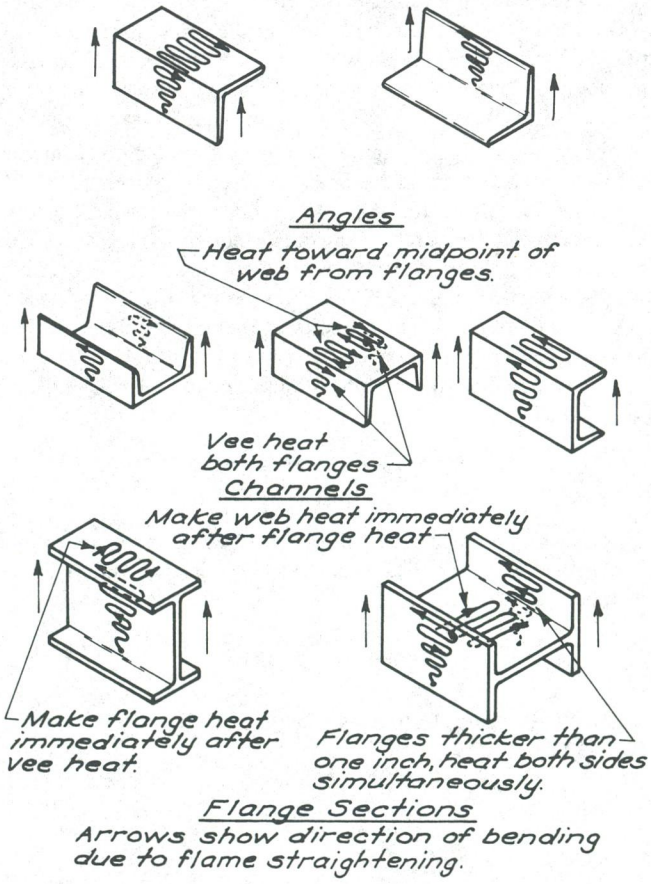

Figure 14. Typical heat patterns.

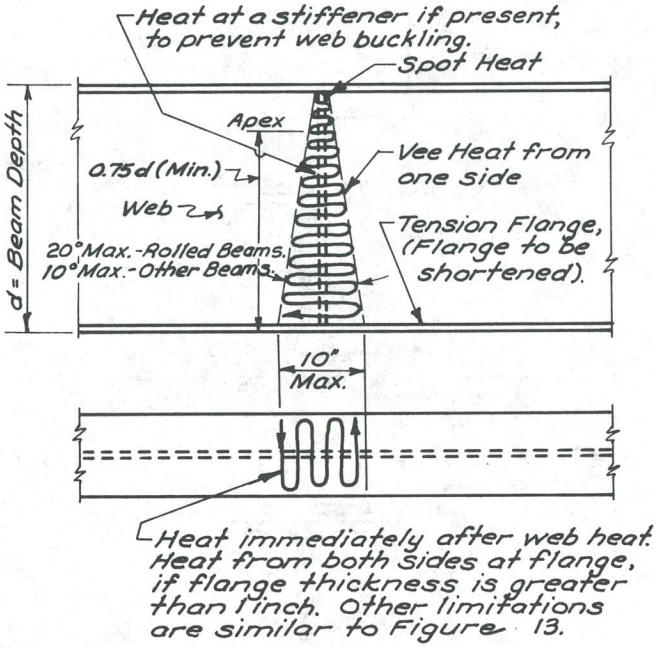

Figure 15. Camber adjustment heat pattern.

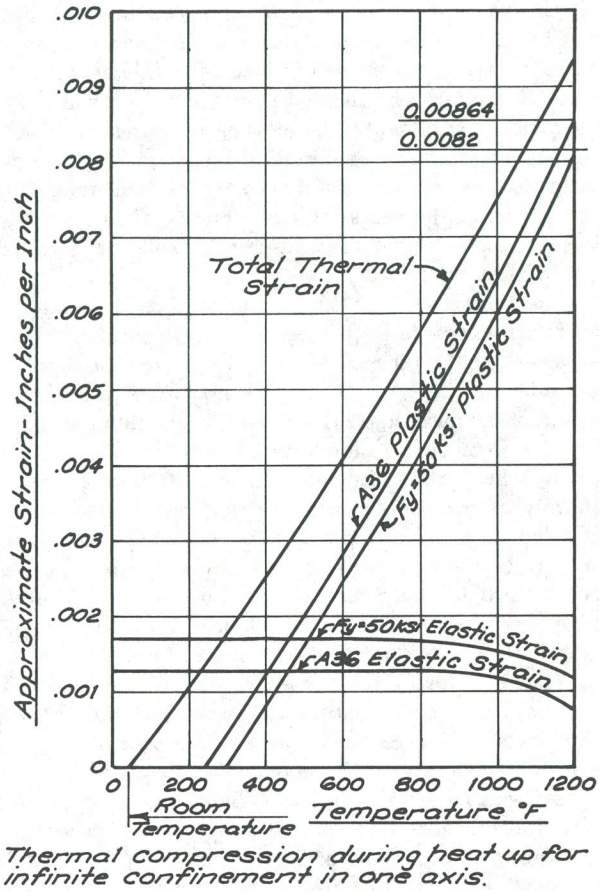

Figure 16. Strain versus temperature for steel.

Figure 16 shows the thermal strain behavior of A-36 and Fy = 50 ksi steels confined perfectly on one axis. Holt (*16*) and Moberg (*15*) show similar relationships and have used these relationships to determine the approximate effect of vee heats. Holt's field measurements indicate that the values for single axis perfect confinements as shown in Figure 16 are valid for free members. Moberg discusses the variation among literature sources as to the amount of shortening per vee heat.

The curves shown in Figure 16 may be used for determining the approximate effect of vee heats for steels with specified yield points of 33,000 psi and 50,000 psi. These curves include the effect of rising temperature on coefficient of expansion, yield point, and modulus of elasticity.

Although the number of vee heats required to straighten a member cannot be precisely predicted, there is useful knowledge to be gained in studying a vee heat example.

For purposes of illustration, the Holt equation will be used:

$$\text{Upset} = \frac{DW}{L} \quad \textit{(See Fig. 17)}$$

Where upset is the plastic strain per vee heat, D is the deflection of the bent member in length L, and W is the width of the member.

$$\text{Upset} = S_p\, W_v$$

where S_p = plastic strain caused by heating W_v = width of the vee heat; thus

$$S_p\, W_v = \frac{DW}{L}$$

and

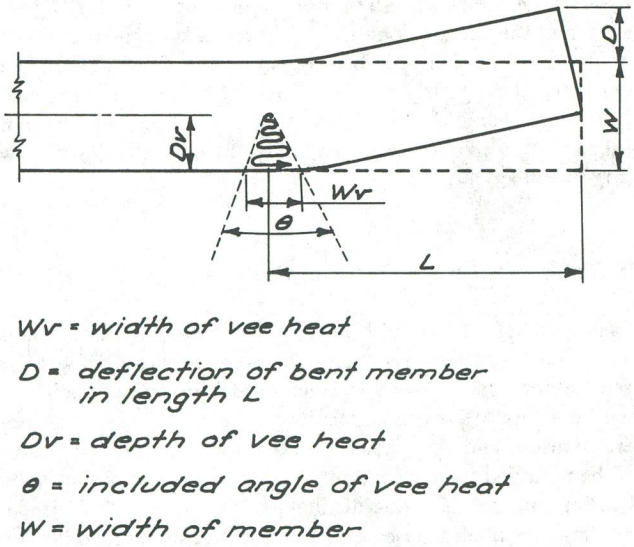

Figure 17. Number and size of vee heats.

$$W_v = \frac{DW}{L\,S_p};\ \text{or}\ \frac{D}{L} = \frac{S_p\,W_v}{W}$$

Example 1

Assume $D = 1.5$ in., $W = 10$ in., and $L = 20$ ft. From Figure 16, $S_p = 0.00864$ for A-36 steel.

$$W_v = \frac{DW}{L\,S_p} = \frac{1.5(10)}{(20)(12)(0.00864)} = 7.2 \text{ inches}$$

$$\theta = 2 \text{ arc tan } \frac{W_v}{2(D_v)}$$

Where D_v = depth of vee heat, assume $D_v = 1/2W$

$$\theta = \text{arc tan } \frac{7.2}{2\left(\frac{10}{2}\right)} = 2 \text{ arc tan} = 0.72$$

$$\theta = 2(36°) = 72°$$

Maximum recommended θ is 60°, therefore use two heats of $W_v = 3.6$ in. for each heat.

$$\theta = 2 \text{ arc tan } \frac{3.6}{2\left(\frac{10}{2}\right)} = 0.36$$

$$\theta = 2(20°) = 40°.$$

Example 2

Assume width of member = 12 inch. Assume depth of vee heat = 6 in. Assume $\theta = 45°$ for each vee heat.

Determine radians of straightening for each vee heat:

$$\frac{D}{L} = \frac{S_p\,W_v}{W}$$

$$W_v = 2 \text{ tan } 22.5° \text{ (6 in.)} = 2(0.414)(6) = 5.0 \text{ in.}$$

From Figure 16, $S_p = 0.00864$

$$\frac{D}{L} = \frac{0.00864(5.0 \text{ in.})}{12}$$

$$\cong 0.0036 \text{ radians of straightening per vee heat.}$$

Temperature

Heating

The primary reasons for using substantial heat input is to ensure heating completely through the thickness of the metal, which will more evenly distribute final residual stresses and to ensure upsetting completely through the thickness. Rapid heating will reduce expansion of adjacent parts by minimizing conductivity. It is also true that rapid heating is more efficient provided excessive temperatures do not occur. A flame-straightening goal should be to heat rapidly, consistent with staying below the maximum permissible temperature, and attaining uniform heat distribution. Shallow, rapid heats are not recommended. Shallow heats produce high residual stresses and members cambered by this method will tend to lose camber. The extra time required to attain through-the-thickness heating will result in a more uniform residual stress distribution.

Persons who are not completely experienced in flame straightening may feel more comfortable in making a preliminary heat that is slower in heating and has less temperature rise to avoid overheating. The result will be less straightening. The heat pattern can be retraced after the steel has cooled. The heat does not have to cool to ambient temperature. However, the steel should be cool enough to place a hand on the heated area. The first heat should be considered as an experiment and close observation is necessary.

Whether single orifice or multiorifice heating tips are used depends primarily on the size and thickness of the metal being heated. To be most effective, heat input should be as rapid as possible. In general, single orifice tips should be used for steel thicknesses to ½ in. Multiorifice tips are more efficient when heating thicker metal. Straightening action relies on the constraint supplied by the cold metal that surrounds the heated zone. Maximum constraint is obtained when the thermal gradient between the heated zone and the surrounding metal is steep. If an area is heated too slowly, heat will be conducted into the surrounding metal, and the heated area will not upset as desired. To achieve rapid through-heat, tip size should be as large as possible without overheating the surface. The steepest possible temperature gradient between the heated zone and the surrounding metal, which does not cause buckling, is desirable. Large multiorifice tips may spread the heating area too much and cause buckling. Heating of flanges with large torches near the web may buckle the web. Tip sizes can range from single orifice welding tips, ranging in size from No. 3 to No. 9, to multiorifice tips up to 1 in. The heating temperature, width of heat, and heating tip size should all be conservative. More rapid heat control can be achieved by using smaller tips. Tip size for a specific application should be established by an experimental first pass, if not firmly established by past experience. Practitioners may not achieve the best results if they arbitrarily use a certain type of heating tip or set arbitrary limits on tip sizes. Also, different gases used for heating may affect the selection of the most efficient heating tip.

Acetylene used with oxygen may be the most popular fuel. Acetylene, propane, butane, or natural gas can be used with oxygen. MAPP gas performs similarly to acetylene. Acetylene and MAPP gas are readily available; however, when burned with oxygen, the flame has a temperature of 5,000 to 6,000 F. With these high temperatures, operators may have difficulty in limiting steel heat tempertures to 1,200 F. The other fuels burn with lower flame temperatures, and their use may be preferred. New York heats with propane and oxygen, and Washington heats with acetylene and oxygen.

Maximum Temperature

For spot heats in plates, 783 F maximum for A-36 steel is all that is necessary. A temperture of 940 F is all that is necessary for steels with yield strength of 50 ksi. Higher heating will not increase contraction and will increase the possibility of buckling. For vee heats use 1,200 F maximum for all carbon and low-alloy steels. Higher heat will not increase contraction and may increase the possibility of buckling. For all heat patterns use

1,200 F maximum temperature for all carbon and low alloy steels. A preliminary heat of 800 F is good practice when starting to flame straighten. Normalized carbon and alloy steels may be flame straightened provided care is taken not to heat above 1,200 F. Flame straightening of quenched and tempered A-514 and A-517 steel is not recommended as a normal practice.

Cooling

Heated steel shall be allowed to air cool. Cooling with dry compressed air may be permitted after the steel has cooled to 600 F. Accelerated cooling methods such as the application of ice or water quenching shall not be used. Accelerated cooling may have one or more adverse effects. Nonuniform cooling may result in an uncontrolled shrinkage pattern, which may distort the member. Accelerated cooling may result in shrinkage cracks. Accelerated cooling may cause a phase change in the steel similar to the effect of quenching. The resulting steel may have hard, brittle areas.

Temperature Indicators

Determining the temperature by observing the appearance of the heated area requires experience. When a steel and torch have been selected, the speed of travel of the torch is one factor in determining temperature. The slower the torch travels, the higher the steel temperature. However, metal thickness is also a factor. Thick metal requires more heat input than thin metal to obtain the same temperature. Temperature indicating crayons can be used to assist flame straighteners to gain visual temperature recognition. Once experience is gained, the use of temperature indicating crayons can be reduced and the operator can usually recognize the proper temperature by the color of the steel. Vee heats are the standard flame straightening heat. In making these heats, the operator must concentrate on having each heat path just touch the edge of the previous heat path so that all of the wedge is heated to the proper temperature with no space between heat paths. Excessive use of temperature sticks can distract from this process.

At 1,200 F steel has a silvery satin appearance when viewed through a #4 welding lens. This is true only when the surface has been cleaned of all flammable materials. Paint or other materials on the surface of the steel will burn with a bright white or red color and obscure the subtle blue-gray colors the operator is trying to observe.

In practice, it is during the first heats that the operator needs help in determining temperature. It is only after several heats have been applied and the paints, oils, and mill scale have been burned and wire brushed away that the blue-gray color of the steel can be observed. See Figure 18.

The light level at the work area affects the perceived color. In darkness, a 900 F to 1,000 F heat appears bright red; in bright sunlight, a 2,000 F heat may appear dull red. Under normal daylight conditions, a cherry red color usually means that the heat is too hot. If the steel is black after cooling, the heat was too hot. A properly heated area will be gray in color after cooling. Enough temperature stick crayons shall be used to ensure that required temperatures are being attained. Crayons manufactured for 600 F and 800 F are usually sufficient for

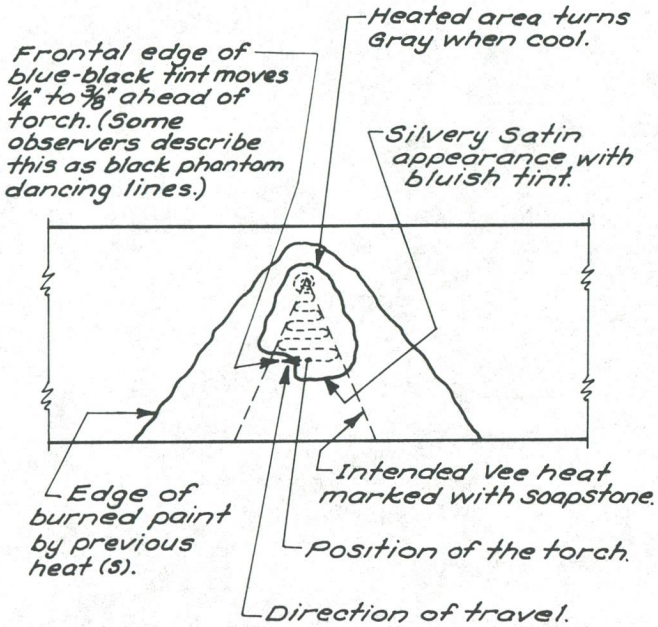

Figure 18. Appearance of a vee heat.

spot heats. Crayons manufactured for 600 F, 1,100 F, and 1,250 F are usually sufficient for vee heats. An 800 F crayon will be needed for the preliminary heat. The heating torch should be in motion when estimating heat by color. Remove torch from surface momentarily whenever the heating temperature reaches 1,200 F.

Contact pyrometers have not been used widely. Graham (*24*) experimented with the use of a contact pyrometer and determined that it always gave an erroneous reading approximately 200 F below the value indicated by temperature crayons. Any agencies using pyrometers should verify their calibration and accuracy.

Effect on Steel Properties

There is ample evidence that properly executed flame straightening does not significantly degrade mild steel or low-alloy bridge steels. Flame straightening has been successfully accomplished for more than 40 years (Holt, *25* and *26;* and Harrison *27*). Harrison's tests of mild steel flat bars showed insignificant increases in Rockwell hardness, virtually no change in ultimate strength, and an inexplainable increase in impact energy measured in ft-lb. Rothman et al. (*10*) tests of A-441 steel showed slightly higher transition temperatures, but the change was not considered significant. Yield and tensile strengths were unchanged, elongation in 2 in. was reduced from 34.5 to 28.0. The specification requirement for elongation was 18.0 (ASTM). Normalized steel A-537-A showed no loss in properties due to flame straightening. Pattee et al. (*12*) state that low-alloy steels with yield strengths ranging from about 45,000 to 75,000 psi can be heated to conventional flame-straightening temperatures (approximately 1,100 F to 1,200 F) without significantly affecting their mechanical properties. Pattee et al. (*9*) tests concluded that flame straigtening of A-441 is an acceptable procedure that does not give an adverse effect on material properties. Holt (*16*)

states that flame straightening will improve material properties, including Charpy impact energy, with the exception of an insignificant reduction in ultimate tensile strength.

Moberg (*15*) notes that the conclusions of recent studies indicate that even heat-treated steels can be flame straightened without material degradation if appropriate maximum tempertures and exposure times are observed. The most recent literature acknowledges that flame straightening will not degrade A-514 and A-517 steels provided heating temperatures are kept below the tempering temperature of 1,150 F. Mishler et al. (*11*) notes that experimental data show that by controlling flame straightening to limit the surface temperature to 1,050 F, no significant reduction in strength or toughness occurred. However, flame straightening of these steels is not recommended. A number of knowledgeable people have reservations about flame straightening these steels. Examples of successful straightening of these steels are unknown. Due to their thermal strain behavior, these steels would also be difficult to straighten. The plastic strain of A-514 and A-517 steels heated to 1,050 F is less than 60 percent of the plastic strain of A-36 steel heated to 1,200 F (calculated from Holt, *16*). The heated element is assumed to be perfectly confined along one axis.

Using an Auxiliary Force

Most successful flame-straightening operations do use an auxiliary or preloading force to control and expedite the straightening process. If an axial compressive force exists in the member and the member is bent so that its centerline falls outside the middle third of the member, then the bending stresses due to eccentricity will exceed the axial stress in the extreme fibers and prevent flame straightening. The axial compression must be substantially removed, and external transverse forces applied to provide restraining compression in the area which needs to be flame shortened. Bent compression members without adequate auxiliary forces could buckle when heated. Tension members will stretch rather than upset, if the stress from dead loads plus misaligment exceeds the yield point at the heat temperature. If the yield point at the heat temperature will be exceeded, an auxiliary force must be used to reduce the tensile stresses. To be absolutely safe, an auxiliary force should be used to bring the tensile stress to compression in the heated zone. A common method of applying an external transverse force is to use a come-along, or chain pull, to provide compressive stress in the region which needs to be upset. Other methods utilize combinations of posts, clamps, and jacks. A compression jacking post is frequently used to remove the axial compression from a bent compression member so that it can be safely flame straightened. Cables or auxiliary tension members can be used to relieve stress in tension truss members.

The amount of lateral force shall have an upper limit to prevent a combination of hot and cold straightening. The New York State Department of Transportation figure of 20 ksi maximum induced lateral stress due to an auxiliary force is recommended. The auxiliary force will cause plastic flow greater than that obtained on free members. The lateral force shall be applied prior to heating, and additional force shall not be applied until the heat is completed. When a number of heats are necessary, the force must be adjusted between heats; the reason being that each heat causes displacement, thus reducing the load on come-alongs or screw jacks. Hydraulic jacks should be locked so that they also give a slightly elastic, but essentially an auxiliary force that reduces with displacement. Auxiliary forces that produce a constant load shall be avoided. An example would be a gravity load applied to a horizontal member with an upward vertical bend. Experienced flame straightening engineers report isolated incidents of difficulty in getting members to begin to straighten. However, these same members may straighten with inordinate rapidity after they start to straighten. Auxiliary constant load forces may produce reverse curvature, or in rare instances could produce failures. Another detrimental effect of constant load forces is that hot mechanical straightening may occur. All auxiliary lateral forces shall be the type that reduce in magnitude during each heat cycle.

Peening

Peening during the application of vee heats is recommended. See Figure 19. Tensile stresses are created on the concave side of the bent member as the beam starts to straighten. These tensile stresses act to resist the straightening action. Light peening of this area adds very localized compressive stresses, which reduce the tensile stresses. By reducing these tensile stresses, there is less resistance to the straightening action and a greater amount of straightening will occur during each heating and cooling cycle. Reducing these tensile stresses, which are residual, is beneficial to strength properties. It is estimated that one-third to one-half of the residual stress in rolled sections can be removed by peening.

Peening is done after the heat has been applied and the temperature of the metal is less than 300 F. Peening shall be done with the flat surface of a ball peen or similar hammer. The blows shall be light enough that no marking of the steel occurs. The effects are further enhanced if the area being peened is backed up with a heavy sledge held against the surface opposite that being peened. Since only light blows are required, the peening operation should be done manually.

Heat Location Limitations

Accidental damage may cause high strain curvature within a short length. Thus, when straightening accidentally damaged steel, it may be necessary to reheat the same area to achieve

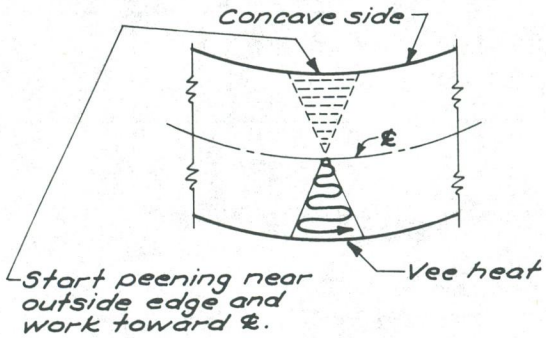

Figure 19. Peening a vee heat.

the required straightening. This is an acceptable practice. However, it is better practice to locate heats adjacent to preceding heats, wherever possible.

Do not attempt to flame straighten at notches or cracks. Heating at these locations may cause notches to crack, and increase the size of existing cracks. Notches and cracks in weldable members can normally be repaired by welding during the flame straightening process. Avoid applying heats at butt weld locations. There is not a high consensus that this is a dangerous practice, but there is enough concern to support the recommendation. Because of the existing residual stresses in the heat affected zone it may also be less productive to apply heat at these locations. Do not apply heats at fatigue critical details. For example, do not apply a heat at the end of a tension cover plate welded to a flange plate. Also, do not apply heat to a girder web in the tensile area, at points of intersecting welds. To summarize, do not locate heats in tensile areas at points that have high stress concentrations due to live loads. Locating heat patterns without regard for existing steel details and condition can result in yield point stresses in dangerous places. This statement is also true for flame cutting and welding. Approximate flame straightening is not a dangerous practice. Field welding can often be the cause of more problems than flame straightening. However, flame straightening does require knowledge and guidance to consistently produce excellent results.

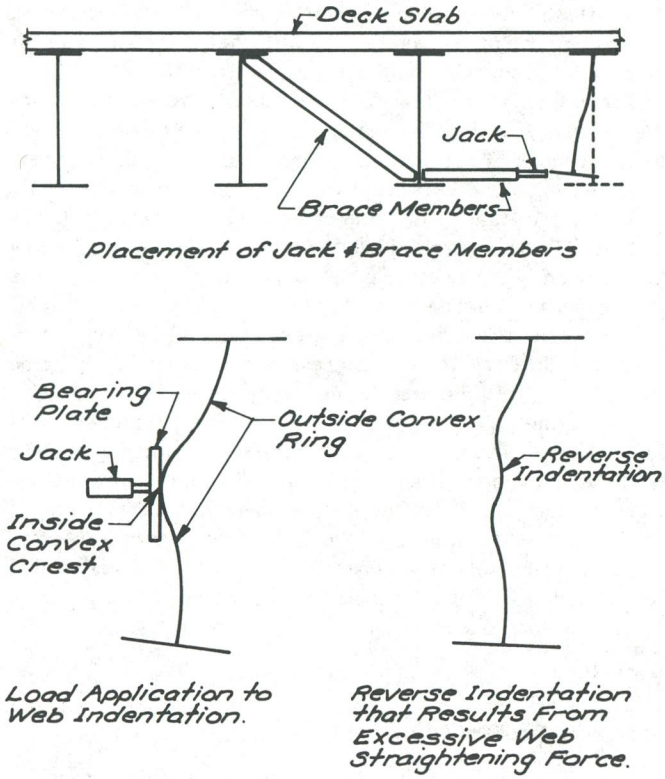

Figure 20. Application of straightening force to damaged beam.

Flame Straightening Girder Bridges

Typical Damage

The most common vehicle-caused accidental damage to girders results in a lateral bend of the bottom flange accompanied by angular rotation of the bottom flange. The web will also be bent, and the top flange may have angular rotation. Top flange rotation rarely occurs if the girder is composite with the roadway slab. There will also be a web indentation if the web has been impacted. See Figures 20, 21, and 22. Girder diaphragms and bottom lateral bracing may also be bent.

Vertical Girder Supports

The amount of dead load that a damaged girder is carrying should be determined from measurements and calculations. If the girder is carrying less than its original dead load, an assessment should be made showing how the bridge will perform under design loads without full restoration of dead load carried by the repaired member. Vertical jacking is normally required

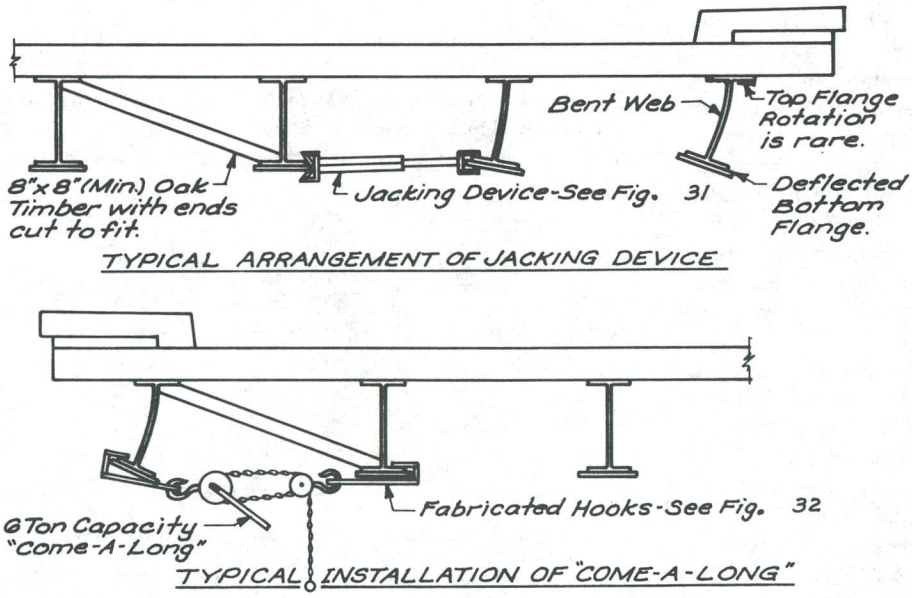

Figure 21. Application of straightening forces to damaged beams.

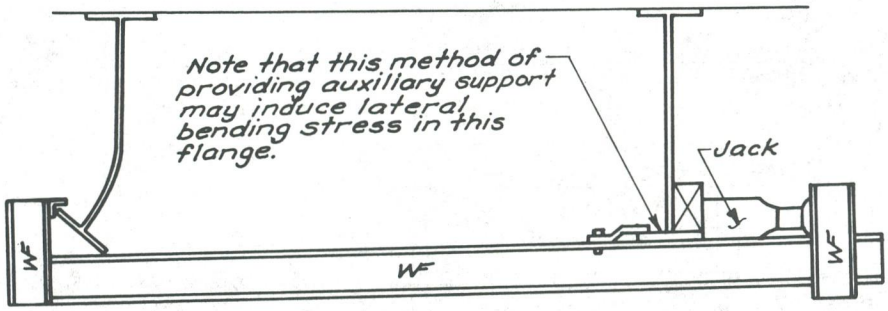

Figure 22. Device for applying auxiliary straightening load to bent I-beams. (Courtesy Arkansas)

to restore full dead load. Jacking may be from posts under the bridge or against beams placed over the member.

During the flame straightening process, the girder strength is temporarily reduced due to heating. As a general guideline, live load should not be allowed on the girder during heating and cooling. If the dead load stress is significant, it may be necessary to jack vertically to reduce stress to a nominal amount. See Figures 23 through 27 for typical methods of providing vertical girder support. Figures 25 and 26 were prepared by the Illinois Division of Highways for mechanical straightening; however, a similar system can be used for flame straightening.

Roadway Slab Supports

When the roadway slab must be supported during girder repair, a typical detail as shown in Figures 28, 29, and 30 may be used.

Typical Auxiliary Force Details

The reasons for using a lateral auxiliary force have been given, see "Using an Auxiliary Force," under "Flame Straightening" in this chapter. For typical details see Figures 20, 21, 22, 31, 32, and 33. Note that Figure 20 in combination with Figure 33 shows a method of applying an auxiliary force to a web inden-

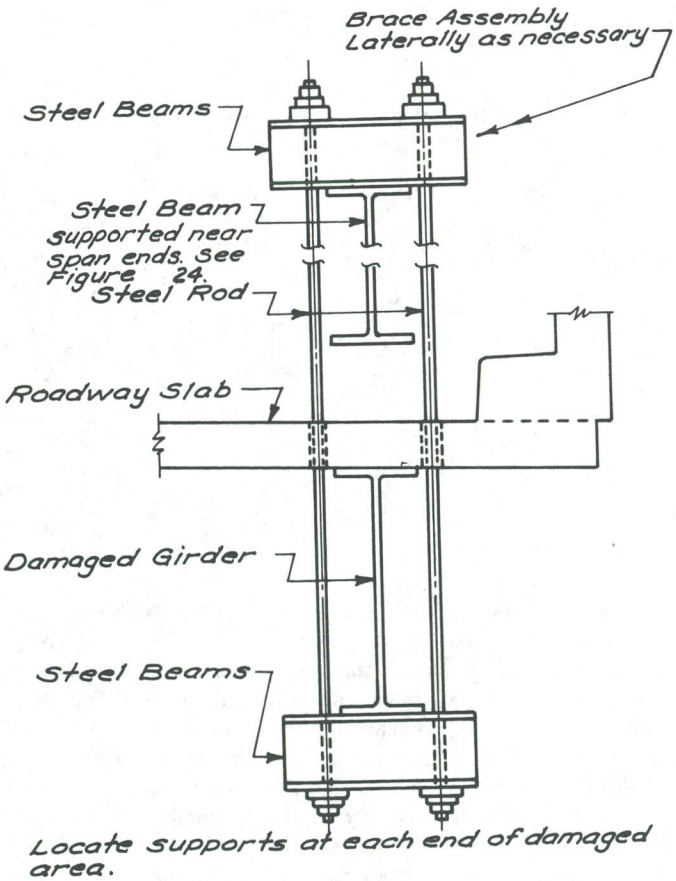

Figure 23. Section view of vertical supports.

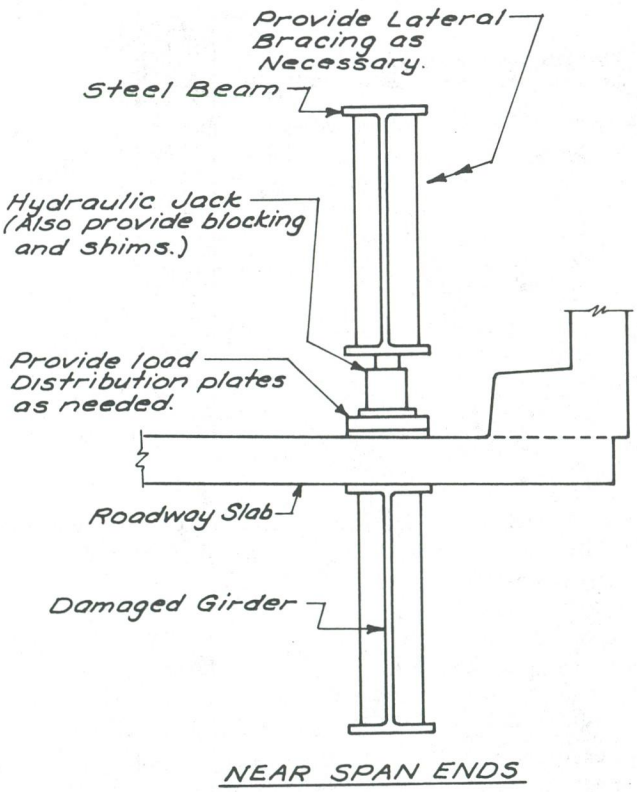

Figure 24. Section adjacent to piers.

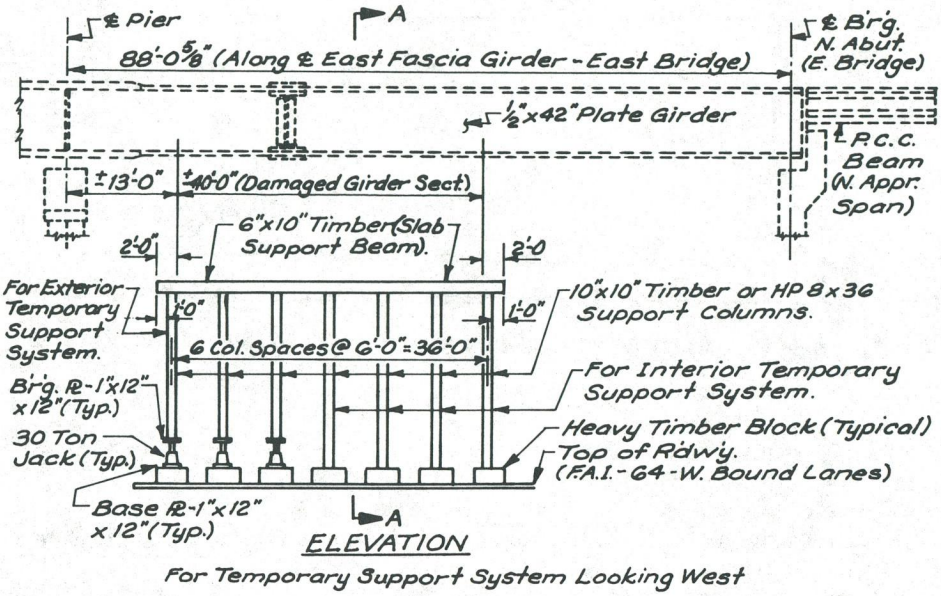

Figure 25. Bridge supports during straightening of girders. (Courtesy Illinois)

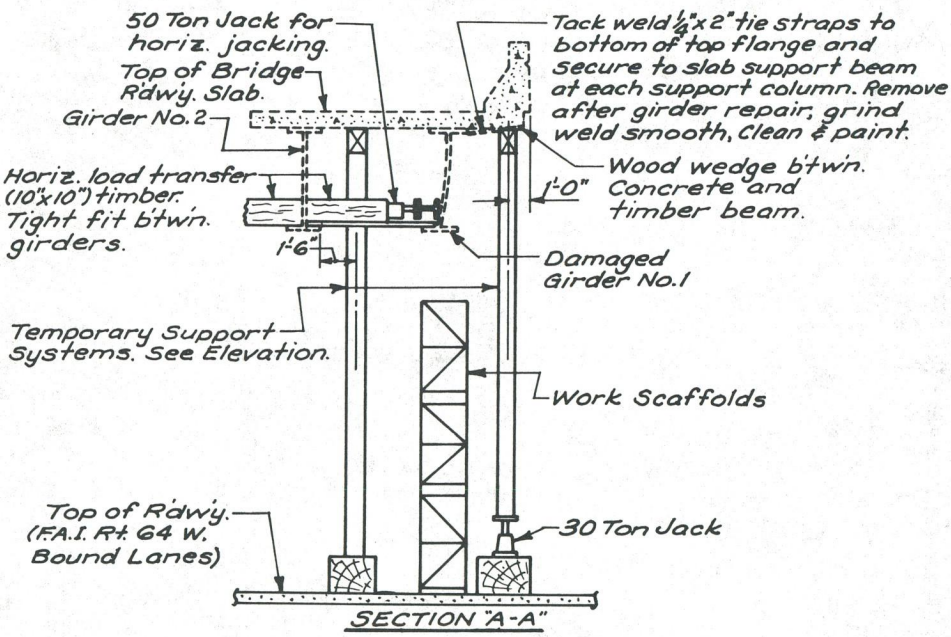

Figure 26. Bridge supports during straightening of girder. (Courtesy Illinois)

tation which will be flame straightened. Also note in Figure 20 that an excessive straightening force can result in a reverse web indentation.

Straightening the Girder

Straightening is normally accomplished in the reverse sequence that took place when the damage occurred. Straightening should be started with components away from the point of impact, such as at diaphragms and lateral bracing. When diaphragms and bracing have been bent beyond the elastic limit, they should be partially straightened first, to permit proper girder straightening. Straightening of secondary members is accomplished by flame straightening, hot straightening, or mechanical straightening. A combination of these three methods may be used. Flame straightening is preferred due to its lack of significant steel degradation. The flame straightening process for secondary members is very similar to flame straightening primary members. Come-alongs, screw jacks, and hydraulic jacks may be used to expedite the process. Because of the different shapes encountered and their orientation, the heat pat-

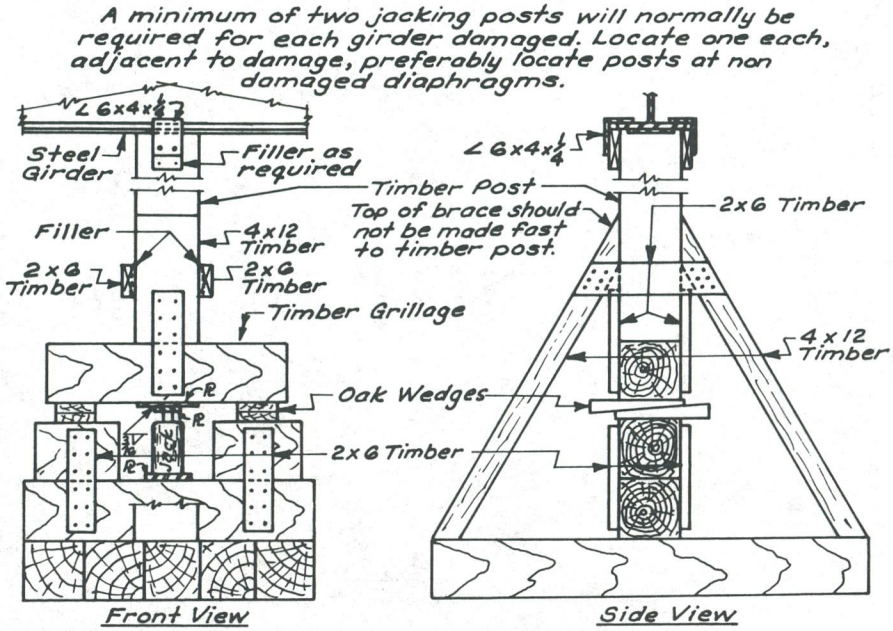

Figure 27. Jacking post for girders being repaired.

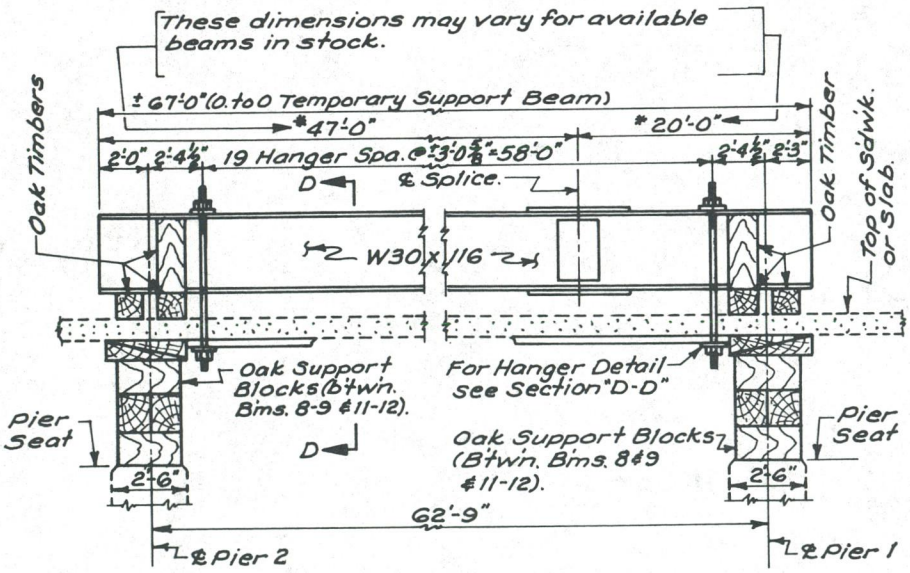

Figure 28. Alternate method of supporting slab during repair operation. (Courtesy Illinois)

terns may be different. See "Heat Patterns" under "Flame Straightening."

Sharp web indentations such as sharp dents, nicks, and gouges cannot be repaired by flame straightening. The web indentation must have smooth convex and concave curves. See Figure 20. The auxiliary force applied to the crest of the convex side should be large enough to place the crest in compression. This force should place the outside convex ring in compression. The required force can be determined by an approximate calculation supported by observation. For the Bothell Bridge repair (Moberg, *15*), an 18,000-lb auxiliary force was used to expedite straightening a web indentation of 1.15 in. After the force has been applied, circumferential heats similar to spot heating are applied to the crest of the indentation around the jacking cylinder head and around the convex ring surrounding the indentation on the outside of the beam. After the initial heats, a bearing plate will normally be required between the jacking cylinder and the crest of the web indentation to distribute the load so that a reverse indentation is not created. See Figure 20.

Straightening the girder should be accomplished by using the following procedure:

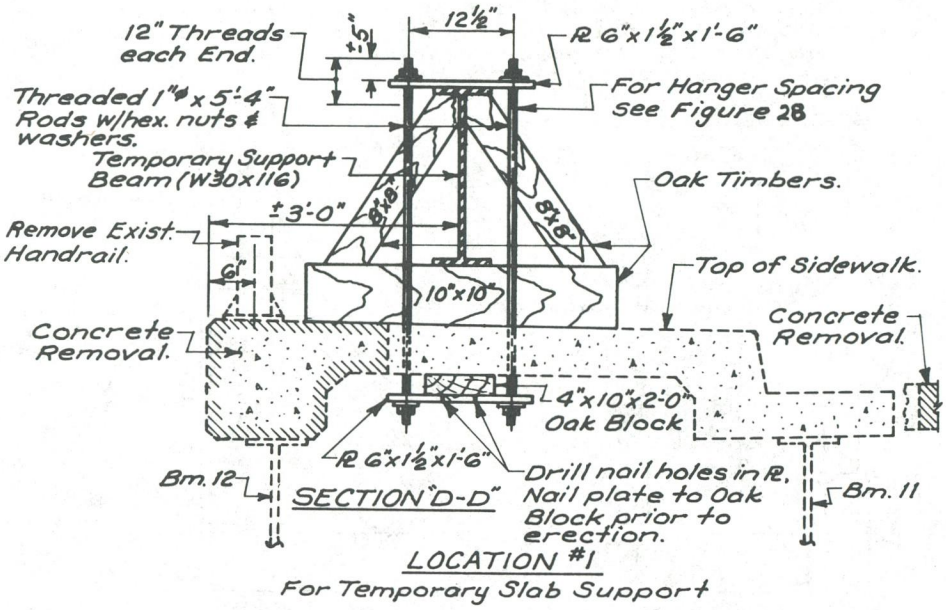

Figure 29. Method of supporting slab during repair operation. (Courtesy Illinois)

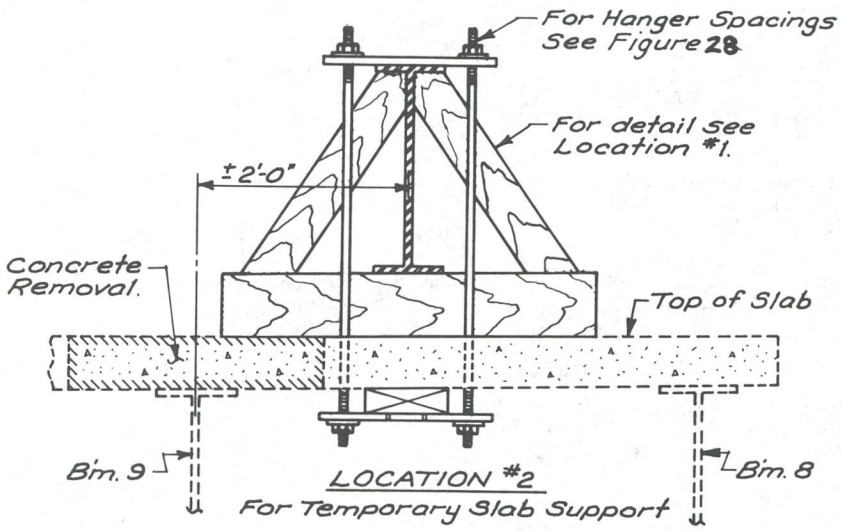

Figure 30. Method of supporting slab during repair operation. (Courtesy Illinois)

1. Use a taut wire to measure lateral displacements from original position. Measure displacements before and after applying auxiliary force and after each heat.

2. Determine member element curvature by measuring displacement offsets from a reference string line, straightedge, or plumb line. Do not heat in areas where the bend radius is greater than $R = WE/2\,Fy$, where W is the flange width, E is modulus of elasticity, and Fy is the yield point stress. These areas have not been plastically deformed, and heats applied to these areas will be counter productive and may result in reverse bending.

3. Determine the approximate number and size of vee heats. See "Predicting Number and Size of Vee Heats" under "Flame Straightening."

4. Apply the auxiliary force or forces in accordance with previous instructions.

5. Apply vee heats and other heats in accordance with previous instructions. Use a heating sequence similar to Figure 34. A heating sequence can be repeated if necessary.

6. The vertical jack or jacks shown in Figure 33 provide an auxiliary force to assist in rotating the bottom flange back into the proper plane.

7. Repeat process until satisfactory alignment has been attained.

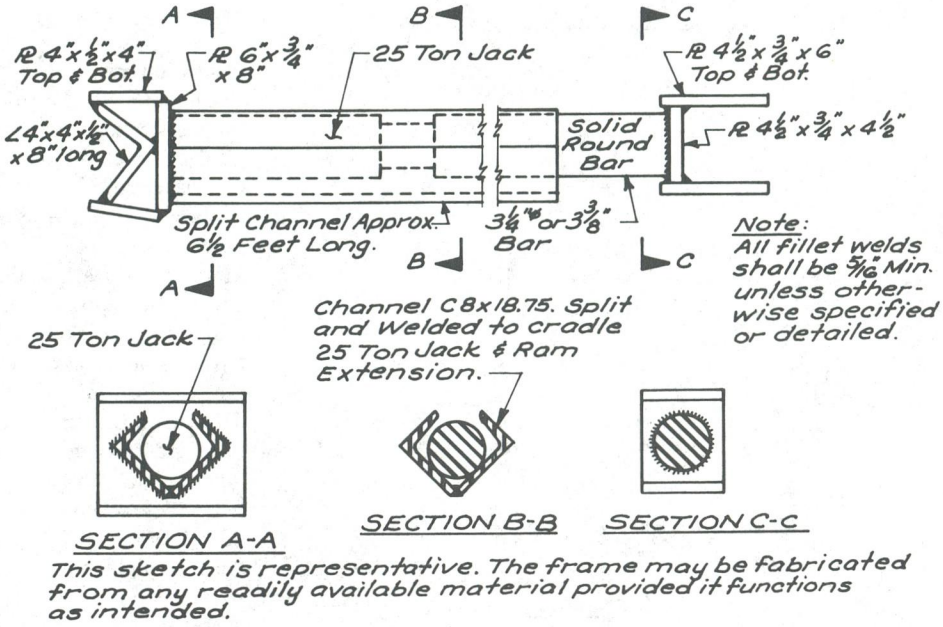

Figure 31. Jacking device. (Courtesy New York)

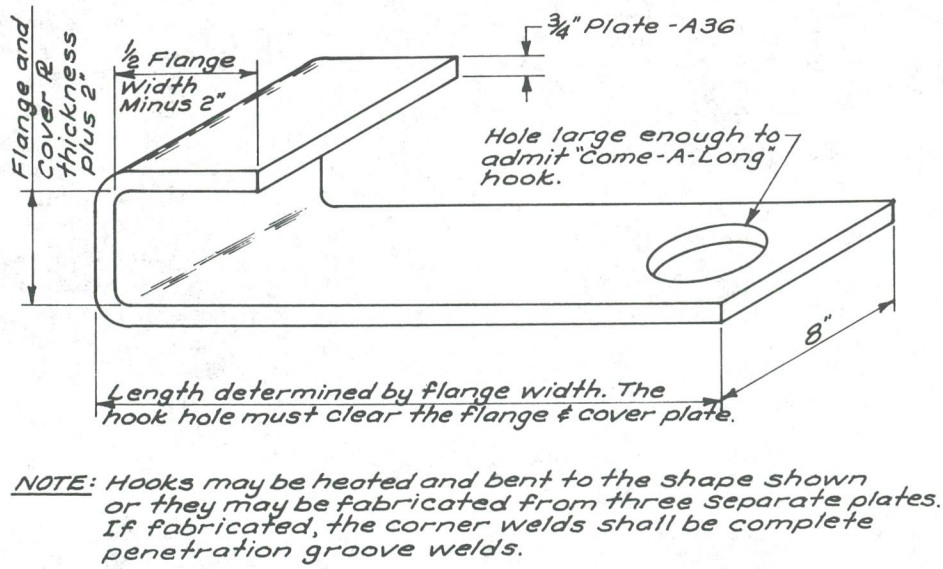

Figure 32. Fabricated hook. (Courtesy New York)

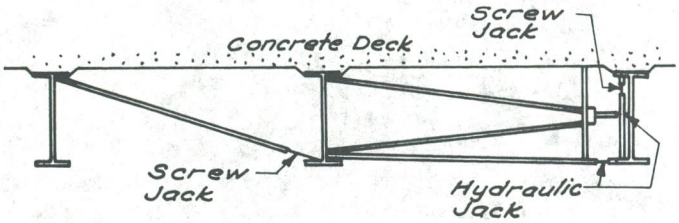

Figure 33. Jack frame—schematic diagram.

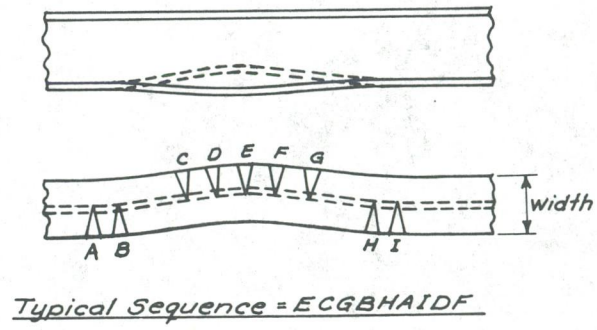

Figure 34. Sequence for straightening a girder flange.

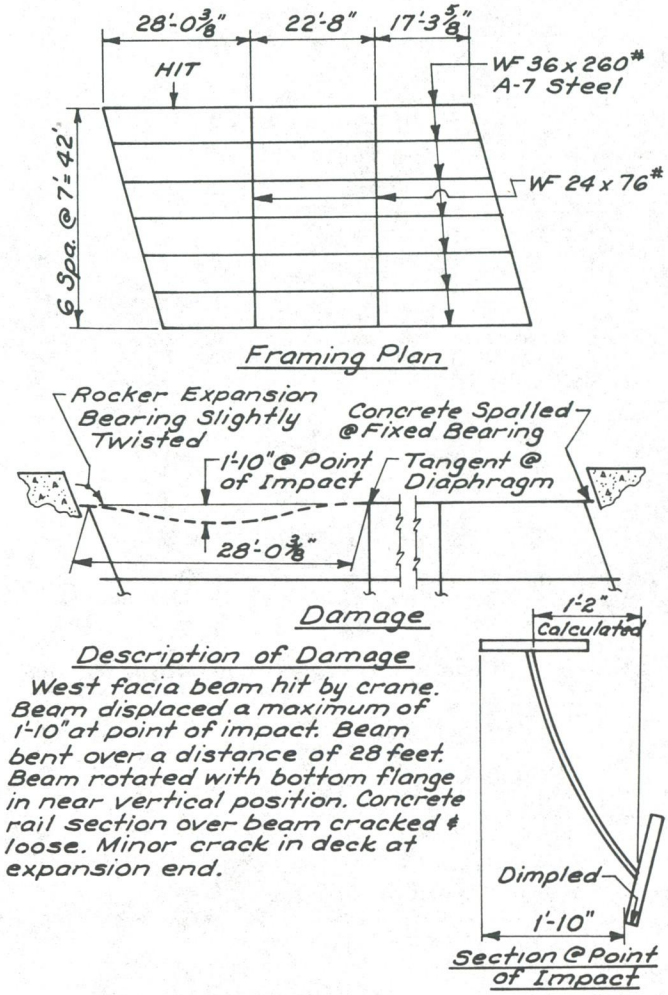

Figure 35. Imnaha St. overcrossing steel damage report.

Example of Damage Repair

A good example of a damaged girder, repaired by flame straightening, is the Imnaha Street overcrossing on State Route (SR) 14 in the State of Washington. The west facia girder was hit by a truck-mounted crane approximately midway between the rocker bearing point and the first diaphragm. The inspection of the damage determined that the girder was bent over a distance of 28 ft. The bottom flange of the girder was rotated to nearly a vertical position. The maximum displacement of the bottom flange was 22 in. from normal position at the point of impact. The rocker expansion bearing was slightly rotated or twisted and concrete was spalled, exposing an anchor bolt at the fixed bearing. The length of span between bearings is 68 ft. Thus, it is seen that the force of impact caused movement at the fixed bearing, approximately 54 ft away from the impact point. Figure 35 shows the framing plan, and the information from the Washington DOT "Damage Report." It was determined that this damaged girder could be totally repaired by flame straightening by Washington DOT personnel. The flame straightening work was accomplished by bridge division engineers assisted by district maintenance personnel.

The decision to flame straighten the girder was primarily based on the past experience of the Washington DOT engineers. The girders on the Imnaha Street overcrossing are WF 36 x 260, A-7 steel. The bottom flange yielded as a flat plate in bending about its strong axis. The bottom flange was located distorted at the point of impact by bending about its weak axis at its junction with the web, resulting in a "dish-like" shape. The web was bent as a flat plate about its weak axis from its junction with the top flange. The bends in the web were gradual from the tangent point at the diaphragm to the rocker bearing, with no local distortions. There were no tears or cracks caused by the collision; however, there were some local dimples in the edge of the bottom flange at the impact point. No steel of the girder was kinked or distorted that would prohibit flame straightening. This brief description outlines the damage assessment which resulted in the decision to flame straighten the girder.

Figure 36 shows the girder as damaged and as repaired. By looking closely at the repaired girder, one can see a slight dis-

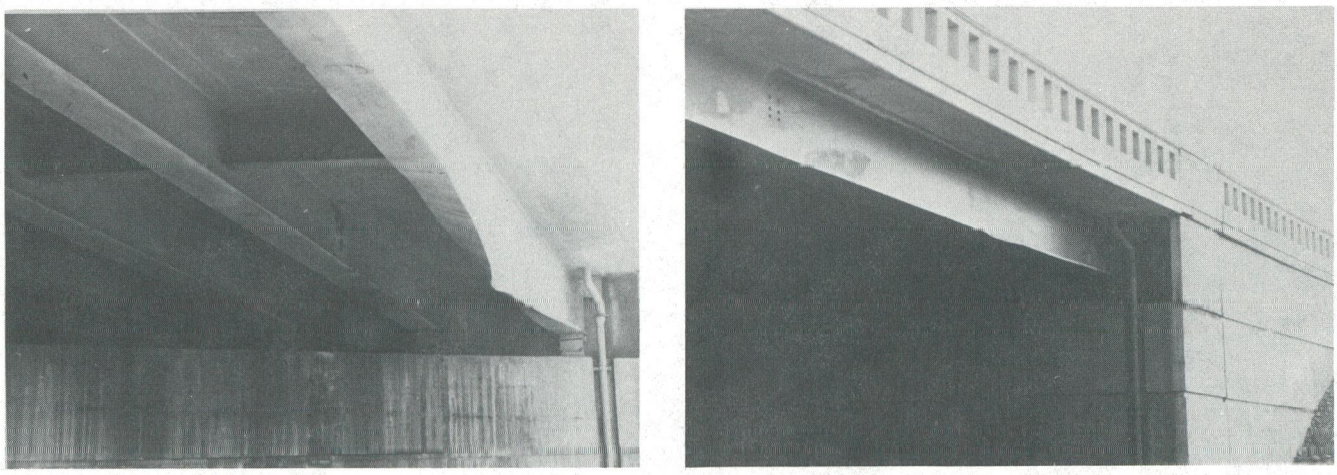

Figure 36. Imnaha girder damaged and repaired. Left photo shows damaged girder; right photo shows repaired girder.

tortion at the point of impact. Figure 37 shows the local "dish-like" distortion of the bottom flange at the point of impact. Also, one can see the increasing rotation of the bottom flange toward the impact point. The auxiliary force details in Figure 38 show the jacks used to apply vertical load to the girder flange and transverse load to the girder during flame straightening operations. The jacking loads were applied prior to each heat and no adjustment was made during the heating and cooling cycles. Therefore, the repair was accomplished by flame straightening only, with no mechanical hot or cold straightening taking place. The auxiliary loads were applied to reduce tension stresses and to accelerate the straightening process. The flame straightening details in Figure 38 show the line heat patterns on the web to achieve straightening. This heat pattern was located on the convex crest of the web bend from the bottom flange diagonally up the web and then parallel with the top flange. This pattern then turned down toward the rocker bearing point. Vee heats can also be seen along the bottom of the web in the vicinity of the impact point. These initial heats were made to assist in rotating the bottom flange to a perpendicular position with the girder web.

As the hit occurred, the bottom flange tended to bend as a flat plate about its strong axis. The web tended to bend as a flat plate about its weak axis, and as the load continued to be applied, the bottom flange was locally distorted at the point of impact. Actually, of course, the distortions occurred almost simultaneously. The damage resulted in compound and reverse curvatures caused by points of fixity and restraint. The repair was started by rotating the bottom flange back to a more perpendicular position with respect to the web. In addition to the two jacks used to vertically load the inside bottom flange, two come-alongs were fastened to the outside edge of the bottom flange through the rail balusters. The come-alongs were fastened to 4-ft long steel bars behind the base of the baluster. These come-alongs exerted an upward pull on the outside half of the bottom flange, and can be seen in Figure 38. The object to the right of the two come-alongs is a hose line to the hydraulic pump. Initial vee heats (line heats could have been used) were applied to the web just above the bottom flange in the impact area. These heats were followed by heats along the convex crest bend in the web. The "dish-like" damage to the bottom flange was straightened concurrently with the flange rotation correction and web straightening, by applying line heats along the crests of the convex bends. Alternating heats were applied to the several girder elements being straightened to ensure a gradual return of the girder elements to their original position. An attempt to achieve too rapid movement of any one element will slow the overall progress, or may cause excessive stress, resulting in buckling or cracking. Some vee heats, to initiate transverse movement of the flange, were applied before the bottom flange was perpendicular to the bottom portion of the web. This was done to assist in straightening the web and to reduce restraint. However, the majority of the transverse flange straightening was accomplished after the flange was brought to a nearly perpendicular position with the bottom portion of the web. The vee heats on the flange were made with two torches simultaneously because of the material thickness. Straightening of the web was accomplished concurrently with all of the straightening operations.

Straightening a girder with these various and large distortions requires patience and experience. The general overall straightening procedure should be planned in advance of starting work. However, the planned procedure may very likely require modification as the work progresses. It was believed that the rocker bearing rotation would be corrected during the transverse flange straightening operation. When the transverse straightening of the bottom flange became slower than anticipated, the engineer in charge decided that restraint was being caused by the slightly twisted bearing. A vertical jacking force was placed at the rocker bearing point, which resulted in the rotation of the rocker back to its original position, and subsequent flange heats became more effective.

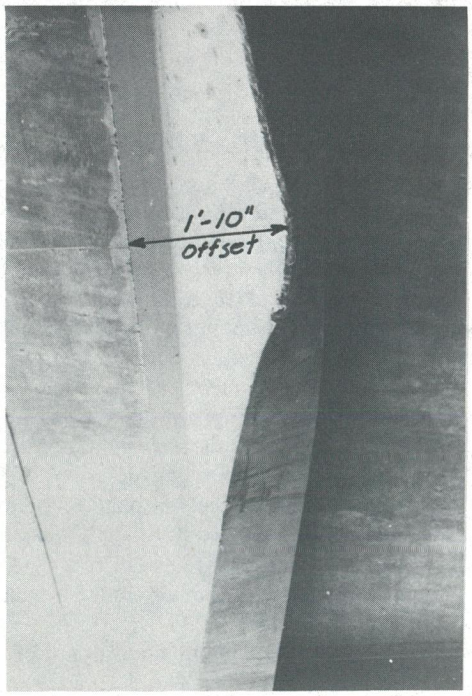

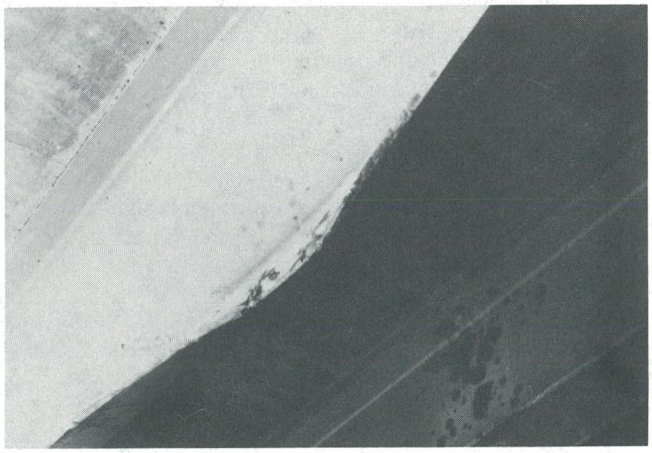

Figure 37. Imnaha damage closeup.

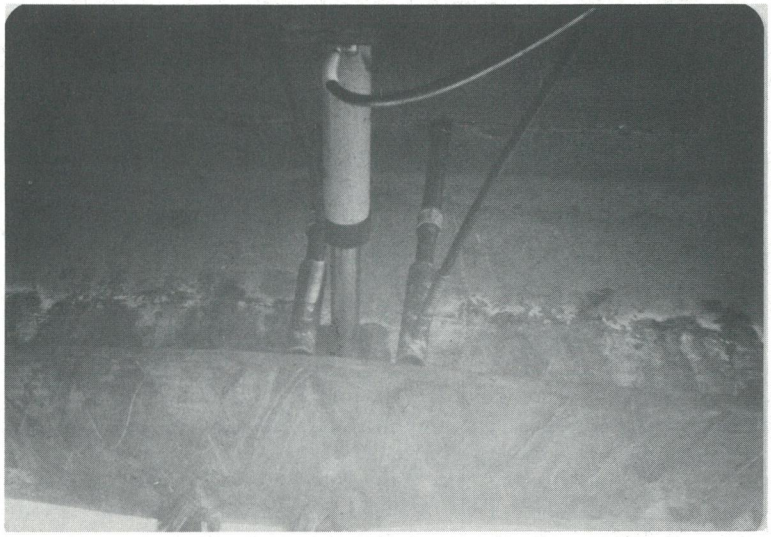

Figure 38. Imnaha flame straightening details. Top photo shows auxiliary force details; bottom photo shows straightening in progress.

Guidelines Applied to Typical Example

The following is an assessment of damage to the Imnaha Street overcrossing, based on the guidelines contained in this manual. The inspection information shown in Figure 35 is used, and interpretation is made to correlate the damage to the guidelines. It is noted that the information shown by the Washington DOT "Damage Report" is similar to present practices followed by the various states. Referring to Table 4, the items under flame straightening that indicate this method should not be considered need to be assessed. The girder is not fracture critical and is a rolled section with no fatigue critical details. There was no tearing and there were no sharp wrinkles, or cracks. There were some dimples at the point of impact, but these could be classified as superficial damage, and the steel was not A-514 or A-517 steel. Therefore, if the damage curvature resulted in less than 0.05 (5 percent) nominal strain, the girder could be flame straightened without any additional strengthening or partial replacement.

Present assessment practices utilize most of the factors contained in the manual, but no state is using a calculated minimum radius of curvature as an assessment factor. Since a minimum radius of curvature, related to nominal strain, is proposed as a principal guideline, more measurements are needed than are presently being made. Offset measurements along the damaged portion of a member should be made at a sufficient number of points to enable the calculation of radius of curvature of the various elements of the member. Observed tangent points should be carefully noted to improve the assessment process. The rotation of a flange about the web should be measured and local distortions should be thoroughly described. Figure 39 shows the recommended measurements of damage for the Imnaha Street overcrossing to more objectively apply the minimum radius of curvature guidelines.

The recommended minimum radius of curvature for nonfatigue critical members of A-7 steel is $R = W/0.1$, as shown in Table 2. Therefore, the minimum radii of curvature for the Imnaha girder elements are:

Web, weak axis $R = \frac{0.845}{0.1} \times \frac{1}{12} = 0.70$ ft

Flange, weak axis $R = \frac{1.44}{0.1} \times \frac{1}{12} = 1.20$ ft

Flange, strong axis $R = \frac{16.555}{0.1} \times \frac{1}{12} = 13.80$ ft

The determination of whether the girder could be flame straightened, without any strengthening or partial replacement, should be based on the minimum radii of curvature. To apply the proposed criteria it is necessary to know the actual radii of curvature of the various girder elements. Measured information is not available from the Imnaha damage report to calculate the minimum radius of curvature in the web or at the local distortion in the flange. However, by correlating the radius of curvature of the web to the calculated offset of 1–2 in., the radius of curvature of the web is determined to be more than the recommended minimum radius of 0.7 ft. As seen in Figure 37, the local distortion of the flange is gradual with no sharp bends or kinks. Reverse curvature is clearly evident. Correlating the minimum recommended radius of 1.20 ft for the flange thickness to the photographs, it is determined that the flange radius of curvature is more than 1.20 ft. Therefore, the web curvature and local flange distortion fall within the recommended criteria, and these girder elements could be flame straightened.

The transverse curvature of the bottom flange acting as a flat plate, occurred over a length just slightly more than 28 ft. The measured offset of 22 in. was made to the edge of the rotated flange. At the point of impact the bottom flange rotated about the web by bending about its weak axis (flange thickness). Therefore, the measured offset is greater than should be used to calculate the radius of curvature of the bottom flange acting as a flat plate. The following interpretation of the known data was made for assessment of damage to the bottom flange. It was decided that the maximum rotation of the bottom flange was about 75 deg. The depth of the dish was assumed to have been 2 in. measured laterally. Then the transverse deflection that should be used to calculate radius of curvature is 1 ft 10 in. less 8⅛ in. (6.14 in. + 2 in.) or approximately 1 ft 2 in. Deflections based on the maximum deflection of 1 ft 2 in. were approximated for the incremental points as shown on Figure 39. The radius of curvature for points 9 through 17 are shown on this figure. The minimum radius of curvature, based on the approximate deflections, was 11.32 ft. The recommended minimum radius of curvature for the flange about its strong axis is 13.80 ft. Therefore, the radius of curvature of the damaged bottom flange was less than the recommended minimum. These proposed guidelines would have required strengthening of the bottom flange after straightening. A crack developed in the bottom flange, on the concave side, after one of the heat applications, reinforcing this interpretation. The engineer in charge of the work described the crack as extending into the flange edge about ½ in. on the top and about ¼ in. on the bottom. The crack occurred in the area of impact and was observed the morning following a heat application at this point. He believes that more peening in this area would have prevented the crack. The crack was gouged out and repaired by welding, prior to further flame straightening. The dimples in the flange at point of impact were ground smooth. With the more comprehensive measurements as recommended in Figure 39, it would have been possible to more accurately assess this damage.

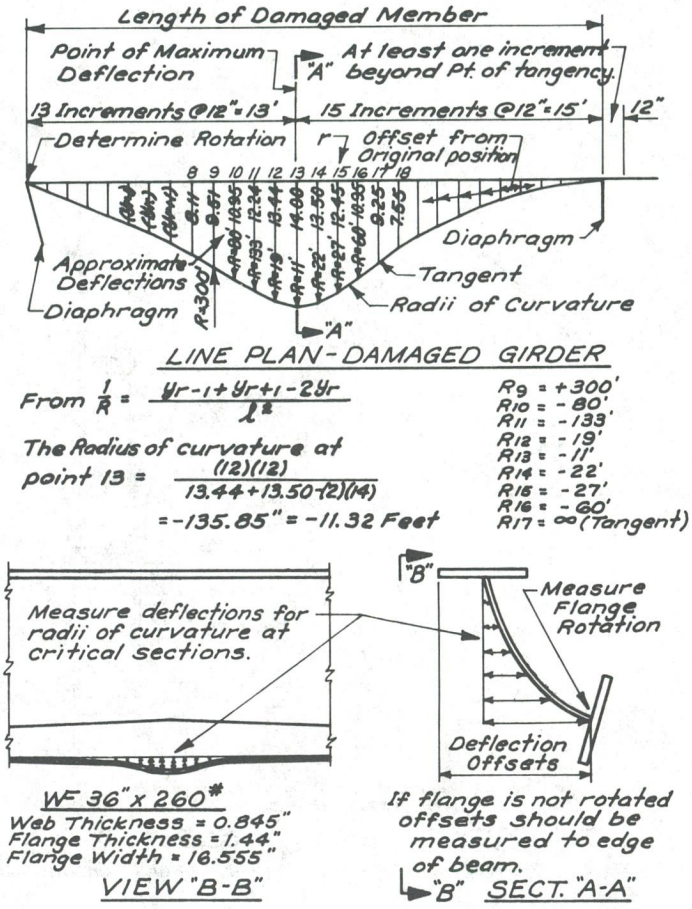

Figure 39. Measurements for curvature calculations.

It should be noted that this method of damage assessment not only gives the radius of curvature at each incremental point, but also shows the direction of the curve. Areas in the member that did not experience yield point strain are identified, and these areas should not receive heat applications. The difference in slopes between adjacent increments gives angular change in radians and can be used to estimate the number of heats that will be required to flame straighten that area. This method of damage assessment is a powerful tool and can be effectively used to improve flame straightening techniques.

Flame Straightening Trusses

Typical Damage

The most typical cause of damage is the result of an overheight vehicle hitting the portal bracing at the approach end of the truss. On some occasions, the vehicle may travel partially through the truss span, striking intermediate sway frame bracing. The damage may be confined to the portal and sway frame bracing. The end post is generally stiff enough that the lower portal strut is sheared and/or bent without serious damage to the end post. The end post may be pulled inward enough to be

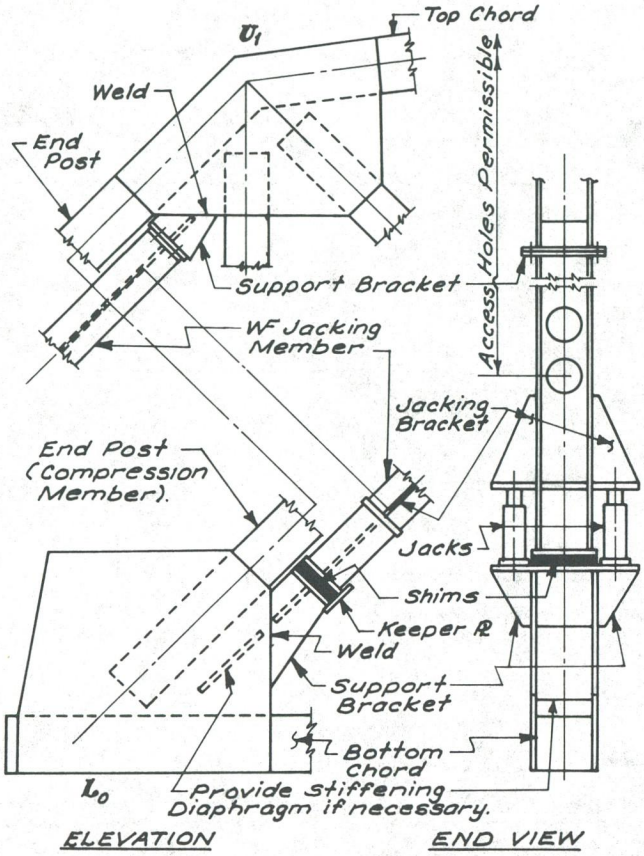

Figure 40. Auxiliary support for repair of truss compression member.

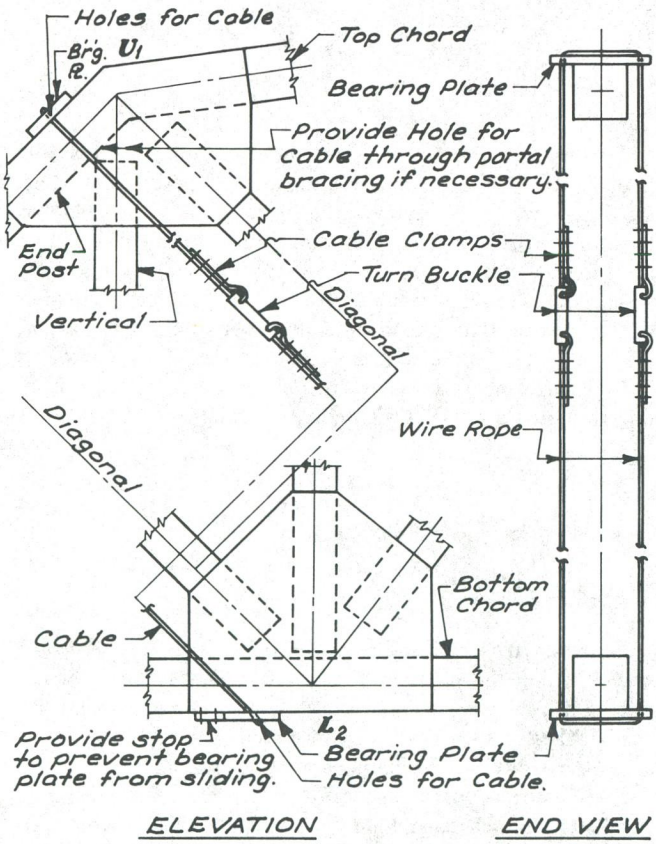

Figure 41. Auxiliary support for repair of truss diagonal, tension member.

bent beyond the elastic limit. Striking the sway frames may result in pulling the vertical truss members inward. In cases where the inward displacement is large enough, the top and bottom chord members may be pulled down or up, respectively.

Depending on the stiffness of the vertical members, additional yield modes may occur. The truss diagonals may prevent the chord members from being displaced; however, the stiffness of the vertical members may be such that they will also be displaced longitudinally.

External Truss Supports

When the damage is confined to portals and sway bracing, external truss supports are not required. Truss diagonals and verticals that have been bent beyond the yield point do not usually require external truss supports. If chord member intersection points have been deflected downward, vertical jacking may be required to supplement flame straightening, by installing an external truss support.

As described under "Damage Assessment," the first consideration for severely damaged structures is to ensure the safety of the bridge against collapse. All forms of immediate strengthening shall be considered, including come-alongs, jacking posts of timber or steel, tension ties, and strongbacks. Materials for this purpose should be readily available. Work should also begin immediately to construct a pile trestle, if needed, to support the structure and to be used to provide the external forces necessary to straighten the bent members.

Typical Auxiliary Force Details

The reasons for using an auxiliary force have been given, see "Using an Auxiliary Force" under "Flame Straightening." Some devices such as jacks and come-alongs are similar to those used for straightening girders. See Figure 21. Additional methods of applying auxiliary force are shown in Figures 40, 41, and 42. Figures 43 and 44 illustrate a method used by the Illinois Division of Highways to mechanically straighten a bent member. A similar method may be used to expedite flame straightening.

Straightening the Members

Straightening is normally accomplished in the reverse sequence that took place when the damage occurred. Bent members away from the point of impact are usually straightened first because members away from the impact point generally have less end of member restraint. Members with riveted or bolted ends will generally have reverse curvature at the member ends and will generally require working three heat patterns in sequence as illustrated in Figure 34. Care must be taken in studying where heats are required, since some bending may be elastic, and applying heats to these areas is counter productive. On occasion an entire intersection involving several members is rotated. All members intersecting this point must be worked together. Individual members may have plastic rotation. These members can be straightened with a combination of vee heats and/or the heats shown in Figures 14 and 11.

Secondary members can normally be straightened by flame straightening, hot straightening, or mechanical straightening. A combination of these three methods may be used. Flame straightening is preferred because of its lack of significant steel degradation.

Straightening truss members shall be accomplished by using the following procedure:

1. After carefully studying the truss, prepare a straightening procedure. This procedure should include the member straightening sequence, joints that are rotated, and members that must be worked together. In addition, the plan should include the expected straightening procedure for each member. This plan may need to be modified during the straightening process, but having a plan will help ensure orderly progress and give an early warning when the structure does not straighten according to plan. Required changes of the plan are not considered unusual; it simply means that the structure is not behaving as anticipated and there is a need to rethink a part of the plan.

2. Use a taut wire to measure displacements from original position. Observe displacements before and after applying auxiliary force and after each heat.

3. Determine member element curvature by measuring displacement offsets from a reference string line, straightedge, or plumb line. Do not heat in areas where the bend radius is greater than $R = WE/Fy$, where W is the flange width, E is modulus of elasticity, and Fy is the yield point stress. These areas have not been plastically deformed and heats applied to these areas will be counter productive and may result in reverse bending.

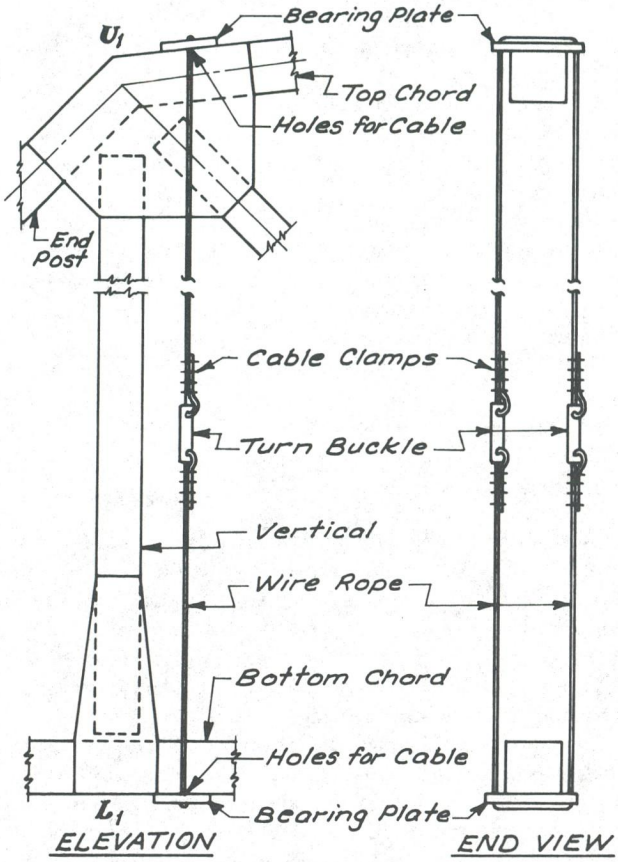

Figure 42. Auxiliary support for repair of truss vertical, tension member.

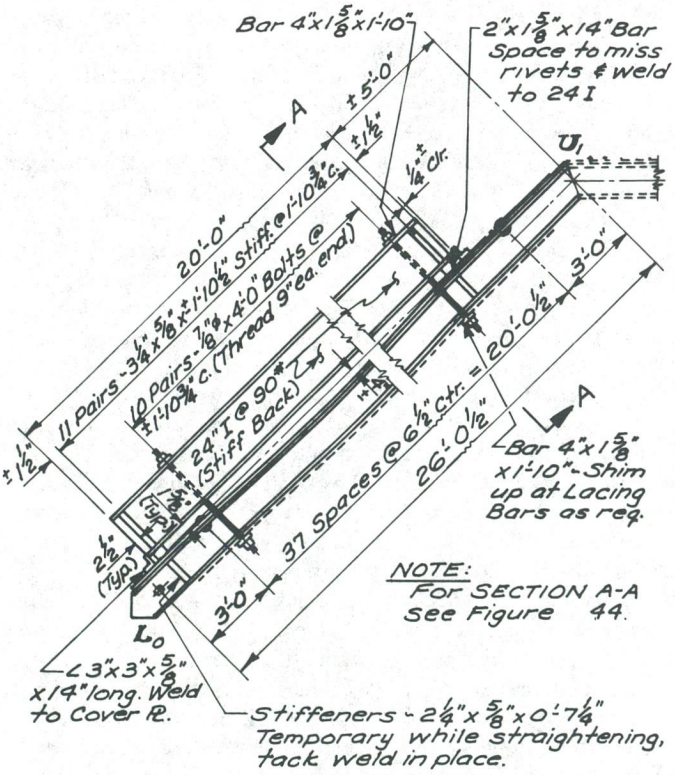

Figure 43. Strongback for straightening truss end post. (Courtesy Illinois)

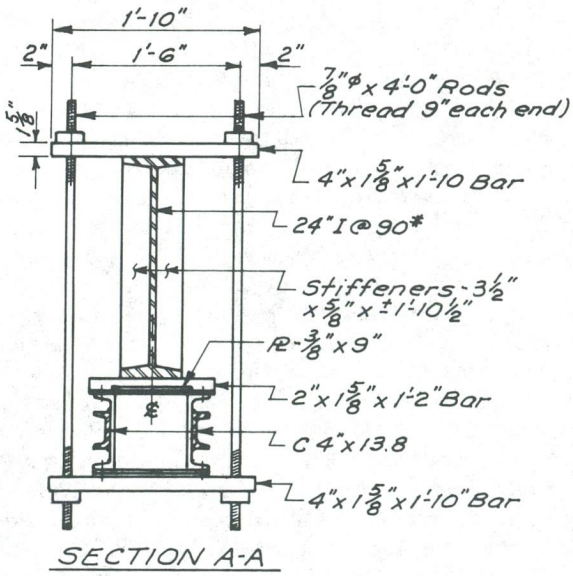

Figure 44. Section A-A of Figure 43.

4. Determine the approximate number and size of vee heats. See "Predicting Number and Size of Vee Heats" under "Flame Straightening".

5. Apply the auxiliary force or forces in accordance with previous instructions.

6. Work in accordance with the straightening procedure plan.

7. Apply vee heats and other heats in accordance with previous instructions. Check displacements and rotations at frequent intervals to ensure progress according to your straightening plan. If necessary, rethink and modify the straightening procedure plan.

8. Repeat process until required alignment has been attained.

Examples of Truss Damage Repairs

Flame straightening damaged truss bridges is both cost effective and time saving. In addition, location and access, difficulty in replacing complete members, and the necessity to maintain or restore traffic as soon as possible may dictate that repairs be made in place. Many repair-in-place projects may incorporate partial and/or complete replacement of members, in conjunction with straightening.

One example of a damaged truss bridge posing difficult access problems was a cantilever deck truss bridge on Aurora Avenue in Seattle, Washington. The damage to this bridge was caused by a barge-mounted crane that struck the lower chord of the suspended span, located 150 ft above the water level. As seen in Figure 45, the removal and replacement of a member in this location would have been extremely difficult and costly. As can be seen, access for repairing by flame straightening was accomplished by lowering work platforms and equipment by a truck-mounted crane from the roadway deck. The work platforms provided workmen good access for flame straightening operations. The work in progress shows the clamping of a steel bar strongback to the damaged member to apply an auxiliary force to facilitate the flame straightening. The straightening of the damaged members on this bridge was accomplished in approximately 3 weeks at a fraction of the cost and inconvenience that replacement would have required. Alaska repaired a similar damage to a bridge in Juneau. Both of these projects resulted in structural restoration of the damage.

The Toutle River bridge located at St. Helens, Washington, was damaged by a truck-mounted log loader. The portal member was practically cut in two. The south end post was laterally displaced 8 in. and the north end post was laterally displaced 11 in. The panel points at the first vertical hanger were displaced downward 1 in. The extensive damage to the portal member, the lateral displacement of the end posts, and the curvature induced in the posts is clearly evident in Figure 46. In order to restore log truck traffic and to facilitate repair work, timber auxiliary members were placed. One transverse 12 × 12 was placed between the end posts, and diagonal 12 × 12 posts were placed below and parallel to the end posts. Jacks were installed at one end of each of the 12 × 12 timbers to transfer load from the damaged members to the timber diagonals. In addition, the capacity of the first vertical hanger allowed for the placement of an external truss support at this point, as seen in Figure 47, to assure more safety, and also to assist in restoring grade at this panel point. Steel jacking boxes and platforms were installed at the bottom end post locations as seen in Figure 47. Locating the jack in a box, retains the jack and allows for placement of shims between the top platform of the box and the auxiliary post. When an agency does this type of repair work, jacking boxes should be designed and constructed prior to the time when they may be needed. A steel landing platform was designed and placed at panel point U-1 to support the 12 × 12 as seen in Figure 48. Also note the transverse jacking setup between the two end posts in Figure 48. This auxiliary member was used to apply auxiliary force when the end posts were straightened. Note the safety lines attached to all component parts of the assembly to ensure that nothing can fall and cause injury or accidents. The center portion of the damaged portal member was removed and replaced. The end posts and the vertical displacements were repaired by flame straightening. Repair work on this bridge started September 20, 1978, and was completed on December 6, 1978. The work cost approximately $35,000. The length of time spent on this repair was partially caused by leaving the damaged portal in place. The engineer in charge of the work felt most of the portal damage could be straightened. This required that the transverse timber strut between the end posts could not be placed at the point of maximum displacement, since this area was occupied by the portal. Therefore, the transverse auxiliary force was not too effective, and it was necessary to straighten the portal member concurrently with the end posts. The time to straighten the end posts would have been reduced if the portal member had been completely removed prior to the start of the flame straightening operations. It is noted that straightening members of the size and stiffness of these end posts does require considerable time and patience.

One of the most spectacular truss bridge damages experienced by the Washington DOT is graphically shown in Figure 49. A dozer with blade attached, being transported on a lowboy truck, struck and extensively damaged the Deep River Bridge located on SR 4 in southwest Washington. Five main truss members of the 160-ft center bearing swing span were destroyed. The end post, two vertical hangers, and the first two diagonals in the north truss were damaged beyond repair. The main compression diagonal U_3-L_4 was displaced laterally away from the roadway centerline about 15 in., as was the vertical hanger U_3-L_3. Panel point L_1 was displaced down 11½ in., L_2 was down 6½ in., and L_3 was down ½ in. Figure 50 is a line drawing of the Deep River Bridge, showing the main members that were replaced and straightened. When this damage was first inspected, it was determined that five members required total replacement. Panel point L_2 was displaced downward over 1 ft. It was estimated that vertical U_3-L_3 and diagonal U_3-L_4 were both displaced transversely a maximum of about 18 in. Based on the experience of the engineers with the Washington DOT, it was decided that this damage could be repaired by combining flame straightening and replacement of damaged members. The damage occurred on August 10, 1970, and the bridge was repaired and open to both marine and vehicular traffic on August 26, 1970. This demonstrates the effectiveness of having trained staff personnel available to handle this type of emergency. The Washington DOT trains engineers to do flame straightening assisted by district maintenance personnel. By having bridge engineering personnel perform the work, it is possible to start work with a minimum amount of time spent on assessment of damage. However, to be most effective, and to ensure an engineering approach in repairing damaged members, it is recommended that damaged components be thoroughly inspected and assessed. With an ex-

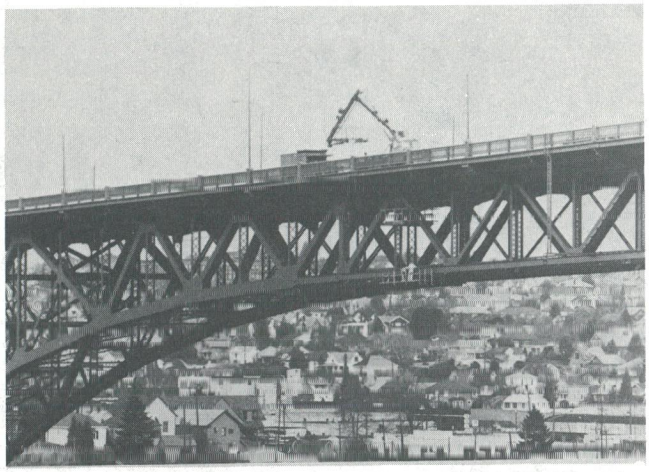

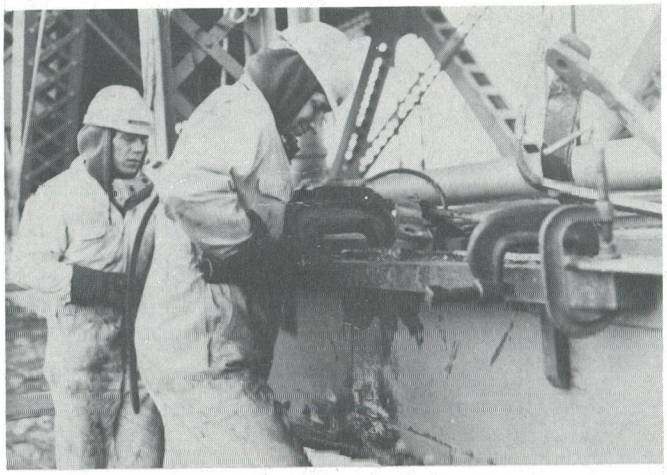

Figure 45. Aurora Avenue Bridge in Seattle, Washington. Left photo shows access to work area; right photo shows work in progress.

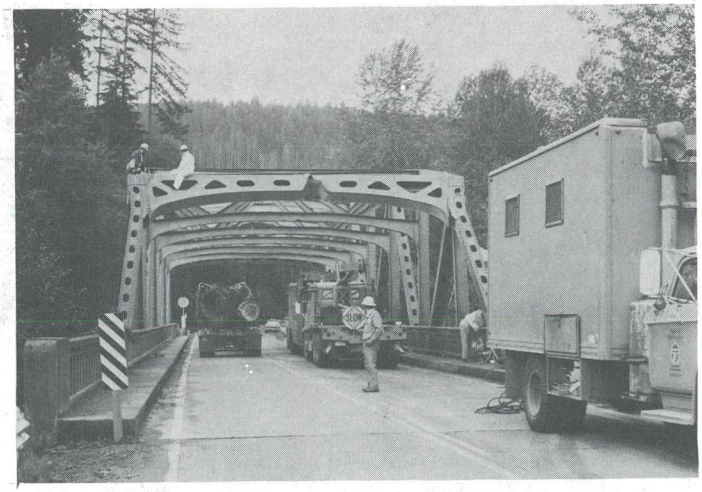

Figure 46. St. Helens—Toutle River Bridge. Top photo shows starting work; bottom photo shows auxiliary members in-place.

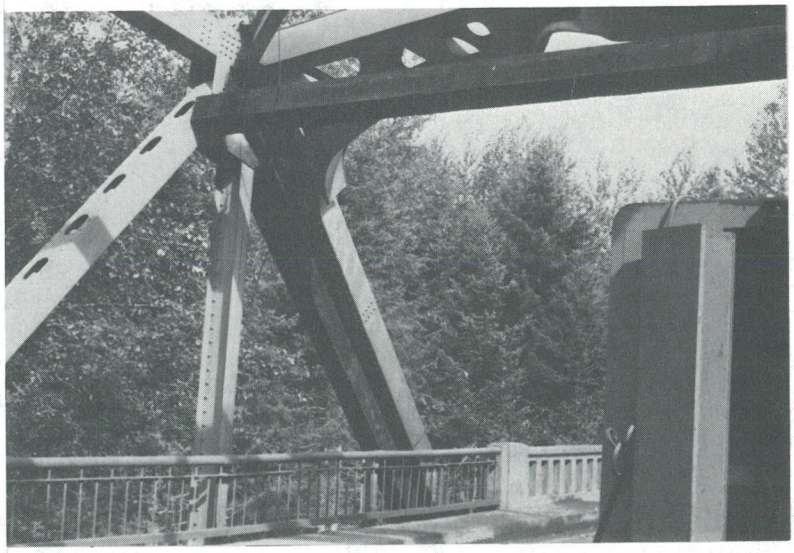

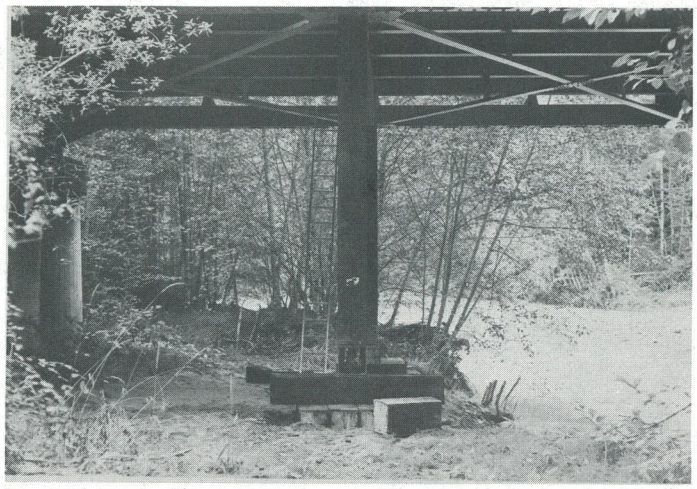

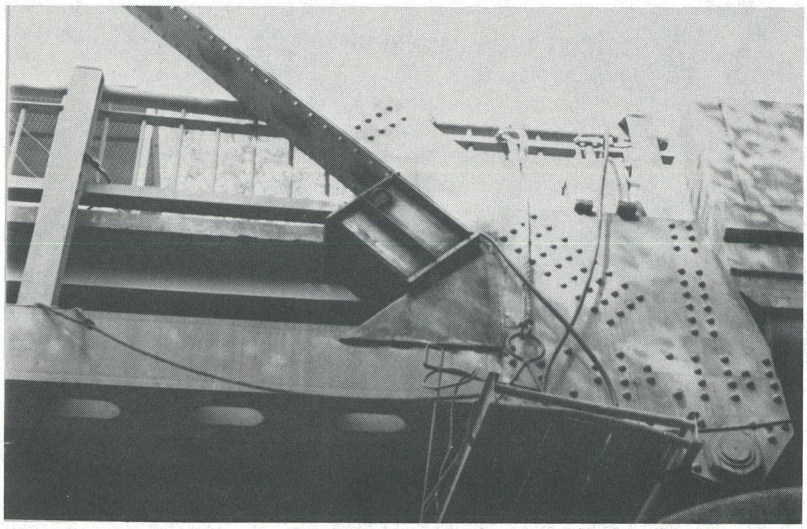

Figure 47. St. Helens—Toutle River Bridge. Top photo shows auxiliary bent at panel point L_1; bottom photo shows jacking box in place.

perienced staff, a quick decision could be made to repair. While the preliminary work, such as placing auxiliary members and installing trestle bents, is proceeding, the engineering assessment should be made.

When trusses are damaged, the truss joints usually remain rigidly intact. Due to the joint stiffness, the members bend outside of the gusset plates. Therefore, to calculate the curvature of these members, the member displacements should be measured from a reference line between gusset plates. Measurements should be made of all damaged members at 1-ft increments. With these measurements one can calculate the radii of curvature along the member as previously described in "Calculation of Damage Curvature." The curvature radii can then be used to determine the repair procedures to follow; and the location and approximate number of vee heats can be established prior to the actual flame straightening operations. By determining the curvature and following the manual guidelines, it is believed that an objective engineering assessment can be made to facilitate the straightening of damaged truss members. Another condition that must be assessed in truss repairs is the possible rotation of damaged members. When a truss member is twisted in addition to being displaced vertically, longitudinally and/or transversely, the rotation or twist of the member must be straightened concurrently with straightening the member in the longitudinal and transverse directions. As shown in Figure 50, truss joint rotation can be measured from a plumb line to the panel point. Rotation of a bent member can be achieved by applying line heats as shown in Figure 11.

If the main compression member U_3-L_4 in the Deep River Bridge had failed, the bridge would have collapsed. The south undamaged truss, the floor system, the north bottom chord, and members U_3-L_3 and U_3-L_4 kept the structure from total collapse. Action was immediately taken to place a pile trestle to support the damaged bottom chord. In Figure 51 the trestle bent is in place and vertical jacks are being placed prior to straightening the bottom chord. One clearly sees the displacement of the chord, and by looking closely one can see the curvature of the member adjacent to the panel points. Note the location of the vee heats that were applied to the chord as shown in Figure 50. The top chord also required similar heating patterns to straighten that member. Figure 51 also shows the bottom chord after being straightened. Thirty-five-ton jacks were used at each

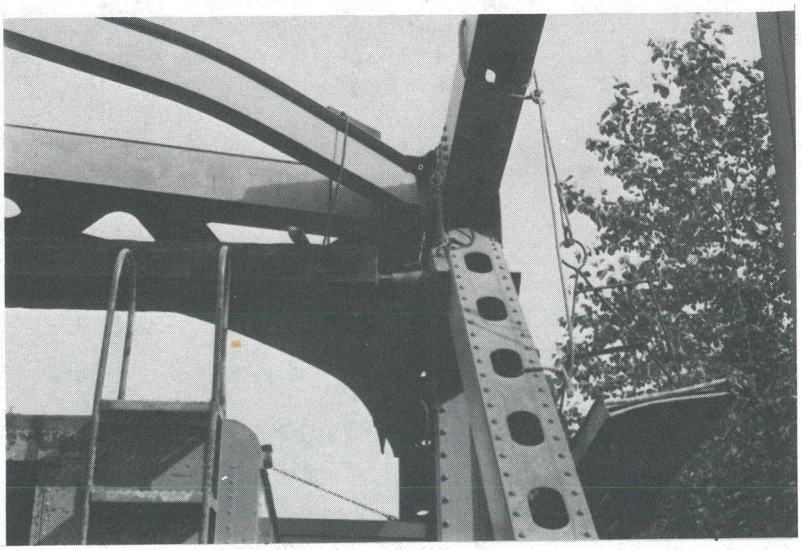

Figure 48. St. Helens—Toutle River Bridge. Top photo shows support bracket for diagonal post; bottom photo shows auxiliary force jack in place.

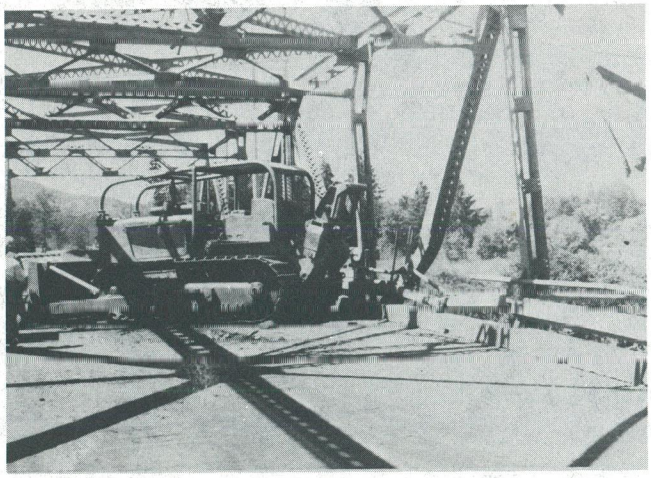

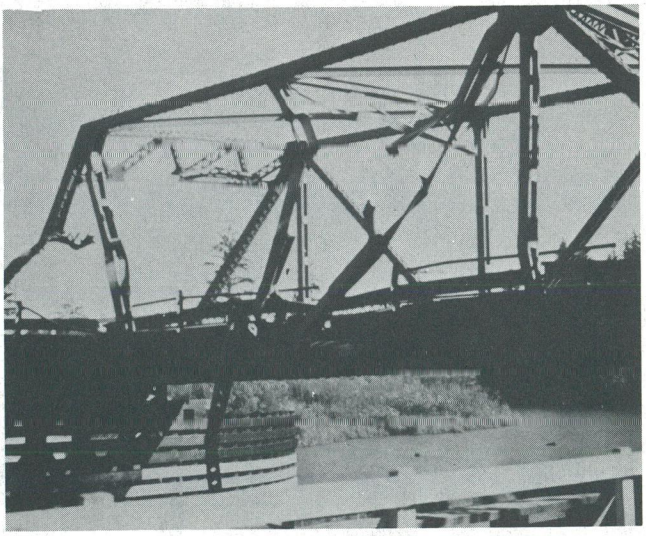

Figure 49. Deep River Bridge damage. Left photo shows collision; right photo shows damage before start of work.

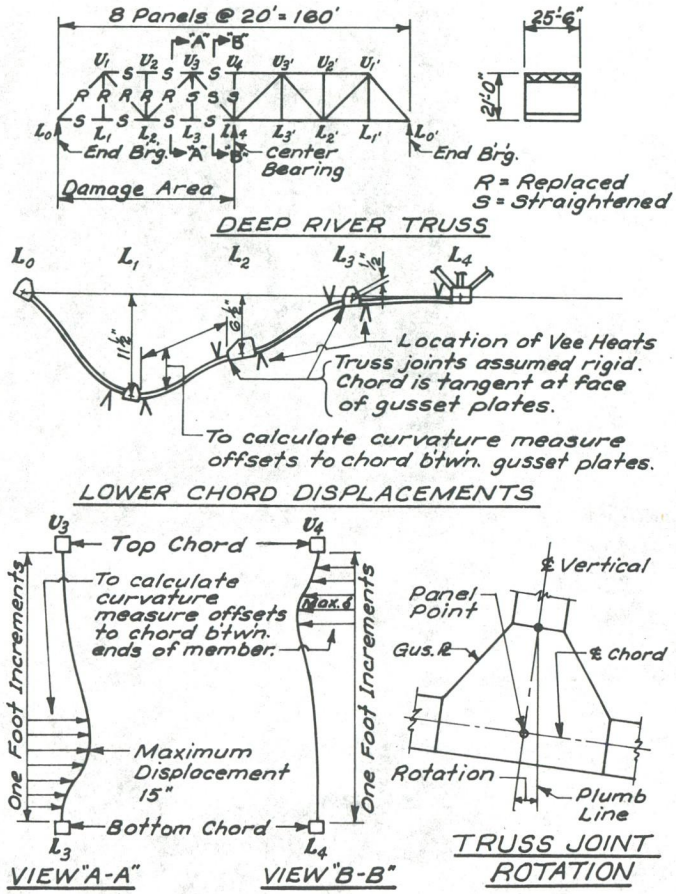

Figure 50. Truss damage assessment.

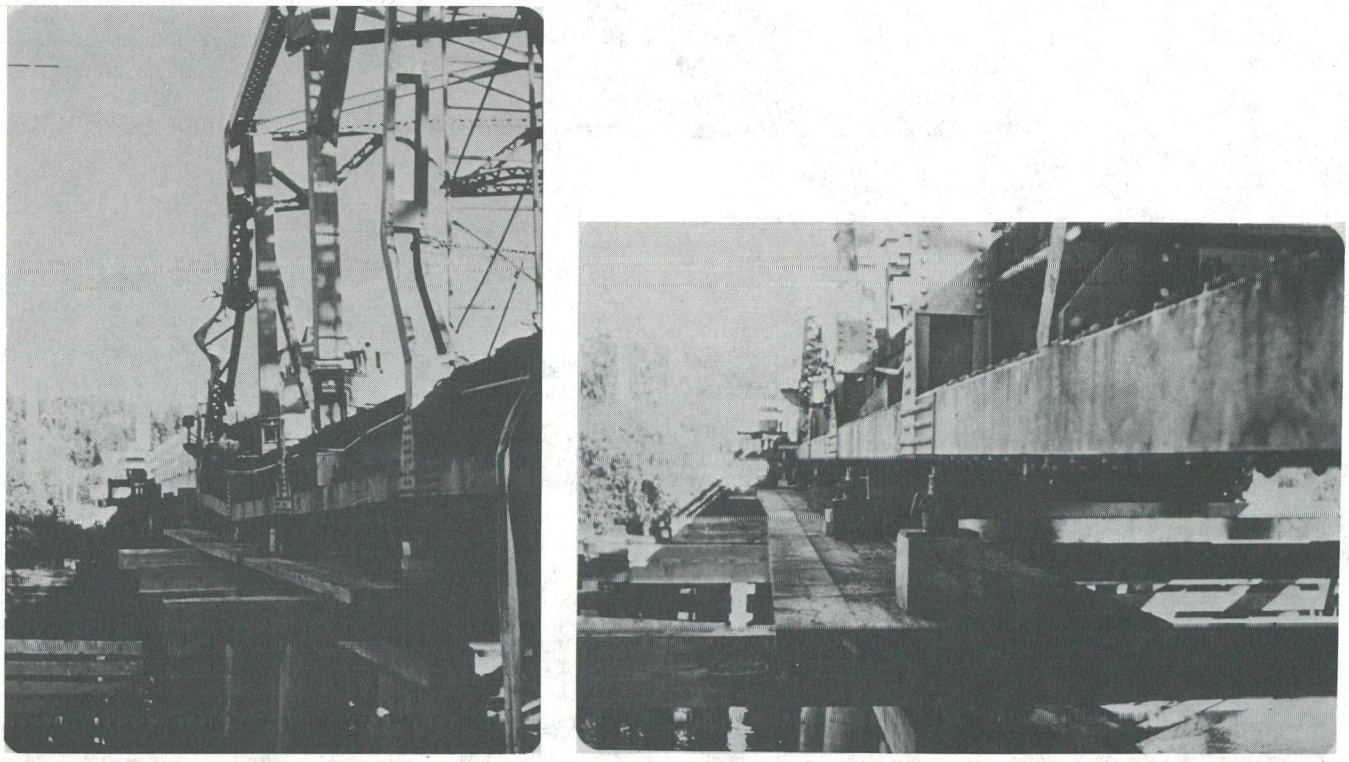

Figure 51. Deep River Bridge, lower chord. Left photo shows bottom chord before straightening; right photo shows straightened bottom chord.

panel point to supply the auxiliary force to straighten the bottom chord. Twist in the bottom chord at L_2, caused by the failure of U_2-L_2, required rotational straightening at that location in addition to vertical straightening. Figure 52 shows the jack installation for the auxiliary post U_3-L_4. The jack is located in a box attached to a platform welded to the gusset plate. The timber post was jacked from this point as U_3-L_4 was straightened, and shims were placed between the jacking box platform and the timber post to assure a positive load at all times. Come-alongs or chain pulls were used to apply the auxiliary forces when U_3-L_4 and U_3-L_3 were flame straightened. These chains were tensioned from panel points of the lower chord of the opposite truss. The auxiliary diagonal timber post and come-alongs are in place before straightening of U_3-L_4 as seen in Figure 53. Where the radii of curvature in this member showed plastic strain has occurred, vee heats were applied to the convex side of the curves. The bends in the member required application of heat at the point of impact, and also at the truss joints where the member was restrained. By calculating the radii of curvature in the member, one can locate placement of heats more accurately. To avoid shortening of the lacing bars, and thereby causing distortion of the member, the lacing bars were cold straightened. This must be done concurrently with flame straightening the member to relieve the restraint caused by the bent lacing bars. As seen in Figure 53, member U_3-L_4 has been effectively straightened. Since U_3-L_4 is a compression member, the guidelines do not place a restriction on the radii of curvature that can be straightened for this type of member.

An innovative temporary support is seen in Figure 54. Shortly after work was started, one of the engineers observed vertical motion when he was removing steel at U_1. To stabilize the point, a section of guardrail was welded to the remaining sections of

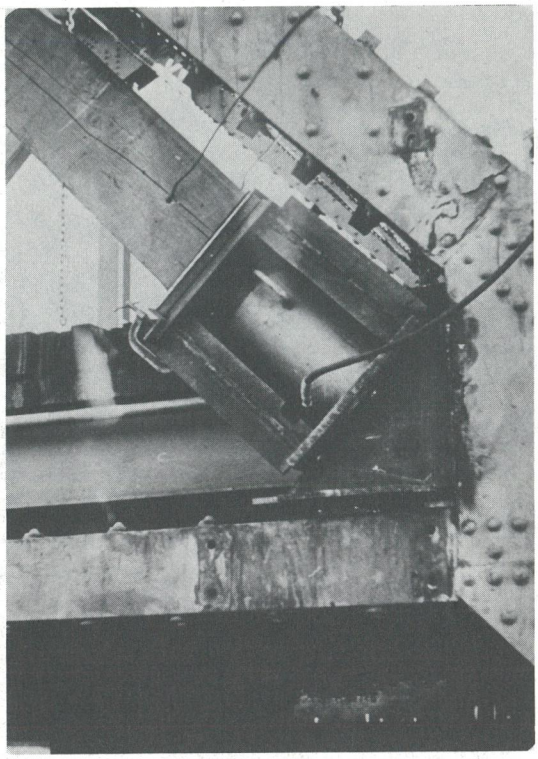

Figure 52. Deep River Bridge, auxiliary post at L_4.

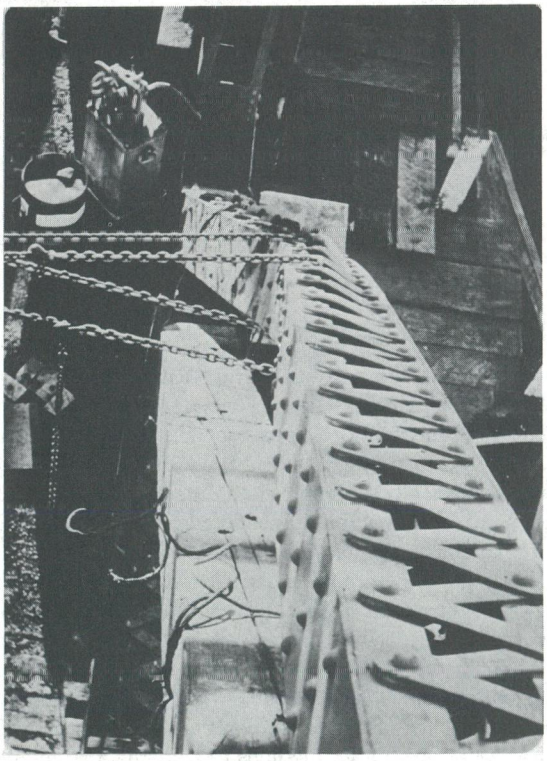

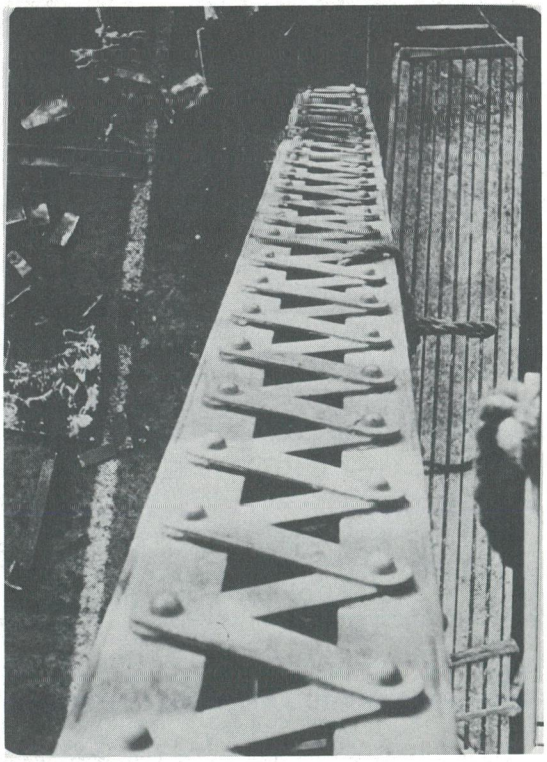

Figure 53. Deep River Bridge, member U_3-L_4. Left photo shows U_3-L_4 before straightening; right photo shows U_3-L_4 after straightening.

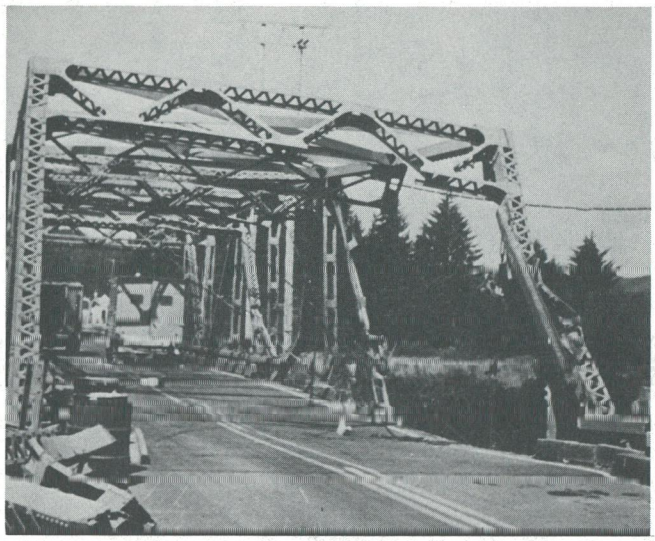

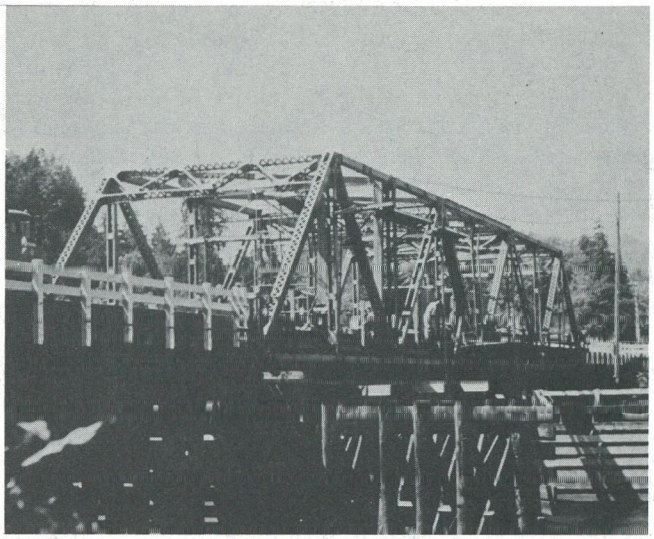

Figure 54. Deep River Bridge repair. Left photo shows innovative temporary support; right photo shows completed truss repair.

L_0-U_1. Prior to welding at the lower end a force of 20,000 lb was jacked into the guardrail section. Chains were then attached from the guardrail to the sagging bottom chord. There is no way to assess the effectiveness of this temporary measure, other than to observe that it was possible to continue the work and complete the repair, also shown in Figure 54. As of November 1983, the Deep River Bridge is still in service, still carrying logging truck traffic, and occasionally still experiencing damage from overheight vehicles.

Repair Inspection

Repair inspection as defined here includes inspecting and monitoring all aspects of the flame straightening during the repair project. Included in the repair inspection of the project are:

1. Equipment used.
2. Straightening limitations.
3. Auxiliary force or forces.
4. Alignment and curvature during straightening.
5. Use of temperature indicators.
6. Heat patterns used.
7. Location of heat patterns.
8. Heating.
9. Maximum temperatures.
10. Cooling.
11. Peening.
12. Examination of steel for cracks that may have been undetected during damage assessment. Use of 10X visual inspection.
13. Final alignment within tolerance.

FINAL ALIGNMENT TOLERANCES

It is not believed that it is practical to give tolerance tables or tolerances in terms of length. The factors that affect the determination of acceptable alignment tolerance include type of member (compression, tension, or a girder), stiffness, length, allowable stress, and end restraints. An acceptable tolerance should be determined on an individual member basis. Acceptable increase in stress should be the final determining factor.

HOT MECHANICAL STRAIGHTENING

For a description of this method and recommendations for its limited use, see "Guidelines for Selection of Repair." Repair inspection shall be magnetic particle dye penetrant, and 10X visual inspection. See "Nondestructive Testing" under "Welding."

COLD MECHANICAL STRAIGHTENING

For a description of this method and recommendations for its limited usage, see "Guidelines for Selection of Repair."

Procedure

Figure 43 shows a successful method of cold straightening used by the Illinois Division of Highways. Figure 55 shows a cold straightening device used by the New York State Department of Transportation to remove web indentations. This device will successfully straighten web indentations; its effect on metal properties is unknown. It is believed that the method of removing web indentations described under "Flame Straightening" is superior and it is recommended for normal use. The Washington State Department of Transportation uses cold straightening for straightening lacing bars of damaged truss members. Heating these bars changes their length and distorts the spacing of the member elements. These bars have been cold straightened with a hammer for nearly four decades. No detrimental effects have been observed. Other methods of applying a straightening force are similar to the methods shown under "Flame Straightening."

Cold straightening a member should be accomplished by using the following procedure:

1. Use a taut wire to measure displacements from original position. Measure displacements at multiple locations during and after applying the straightening force.
2. Determine member element curvature by measuring displacement offsets from a reference string line, straightedge, or plumb line. Do not apply force in areas where the bend radius is greater than $R = WE/2\,Fy$, where W is the member width in the plane of the bend, E is the modulus of elasticity, and Fy is the yield point stress. These areas have not been plastically deformed and applying forces to the areas will be counter productive and may result in reverse curvature.
3. Apply forces uniformly along the length of bend to be straightened.
4. Work in accordance with your straightening procedure plan.
5. Check displacements at frequent intervals to ensure progress according to your straightening plan. If necessary, rethink and modify your plan.

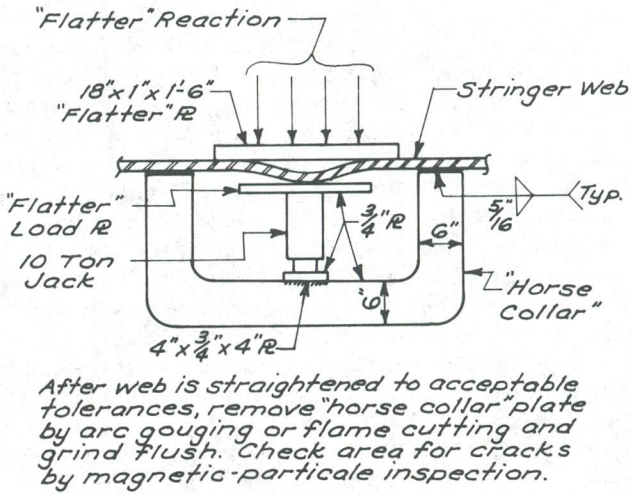

Figure 55. Device for straightening web deformations. (Courtesy New York)

Repair Inspection

Repair inspection as defined here includes monitoring all aspects of the cold straightening process. Included in the repair process are:

1. Application of straightening forces.
2. Alignment and curvature during straightening.
3. Examination of steel for cracks. Use of both magnetic particle dye penetrant, and 10X visual inspection. See "Nondestructive Testing" under "Welding."
4. Final alignment within tolerance.

WELDING

Welding is used for several types of repair, including defect or crack repair, welding replacement pieces into place, and adding strengthening plates by welding. The guidelines for weld repairs may seem conservative. However, poorly executed weld repairs in tensile areas can be very dangerous and in some instances may do more harm than good. Therefore, strong emphasis has been placed on high-quality welding: nondestructive testing and rigorous inspection. See "Selection of Repair Method/Method of Repair/Welding" for welding limitations.

Basic Criteria

Current AWS and AASHTO specifications shall apply. Preheat should always be used when making weld repairs. Minimum preheat temperature shall be 300 F. Preheat, interpass temperature maintenance, and post heat shall be contiguous operations. Preheat and interpass temperatures shall be sufficient to prevent crack formation. Preheat and interpass temperatures combined with heat input during welding shall be such that the hardness of the heat-affected zones does not exceed a Rockwell hardness of C-27. Postheat shall be used when making repair welds. Postheat temperatures shall be 200 F minimum for metal equal to or less than 1 in. thick to 450 F minimum for metal over 1½ in. thick. Postheat temperature shall be maintained for 1½ hours minimum. After this time period, reduce and then remove the heat source and cover the weldment so that the repair weld will cool slowly to ambient temperature. All welding shall be performed by qualified welders. It will usually be necessary to be well qualified for overhead welding. Successful field welding experience is necessary.

One of the concerns in field welding of bridge steels, either for defect repair or partial replacement, is the prevention of underbead cracks (sometimes called delayed or hydrogen cracks). These cracks form from a combination of hydrogen dissolved in the weld metal as it cools, and a hard microstructure in the heat-affected zone. The hydrogen may be picked up from the covering of cellulose-type electrodes, moisture, dirt, scale, or organic materials such as grease, paint, or crayon marks on the weld joint surfaces. All welding procedures should result in low hydrogen content. A hard microstructure may be caused by fast cooling after welding in bridge steels having chemical compositions at or near the maximum composition limits. All bridge steels, including A-7, can have compositions high enough for these hard zones to form.

Prior to welding, the joint surfaces should be cleaned by power wire brushing or light grinding to remove any rust that may have formed. Grinding is preferred, particularly if the rust is heavy, as wire brushing may not remove the rust completely. Other foreign material (dirt, oil, paint, crayon marks, etc.) also should be removed with a solvent. This cleaning operation will help to minimize hydrogen pickup.

The shielded metal-arc (covered electrode) process is the usual method used for repair welding. The gas metal-arc, or metal inert gas process (also known as GMA or MIG), has found very little use. It may be specified as an alternate to covered-electrode welding. Kansas uses this process with solid electrode wire and Oklahoma has used it with flux cored electrode wire. Each of these processes has advantages, but covered-electrode welding is more versatile for field use and does not require the specialized equipment used for GMA welding. Low-hydrogen covered electrodes, such as E7016 and E7018, should be used

instead of cellulose-covered electrodes E6010 and E7010 to minimize hydrogen pickup. The low-hydrogen electrodes have coverings that produce very little hydrogen. The cellulose-covered electrodes have organic-based coverings that produce large quantities of hydrogen. To aid in preventing shrinkage cracking, the minimum electrode size should be 5/32 in. diameter. Use ductile weld metal; E7018 and E6018 are ductile electrodes. Overmatching of weld metal, i.e., when the weld metal is significantly stronger than the base metal, is undesirable.

The coverings of the low-hydrogen electrodes readily pick up moisture from the atmosphere, which then becomes a source of hydrogen. These electrodes must be given special care to prevent this moisture pickup. The electrode cans should not be opened until shortly before welding is started. If possible, the electrodes should be placed in a 250 F electrode oven as soon as the can is opened and kept in the oven until ready to weld. The electrodes should be warm to the touch when used. Small heated containers can be used to keep a ready supply of electrodes convenient to the welder. The electrodes should not be handled with greasy gloves or allowed to contact water or other foreign matter. If this does happen, throw away the electrode rather than take a chance of putting hydrogen into the weld by using it.

Defect Repair

The defects that may be repaired by welding include nicks, gouges, and cracks. Repair involves grinding the defect to produce an acceptable contour or shape and then filling in the ground-out area with weld metal.

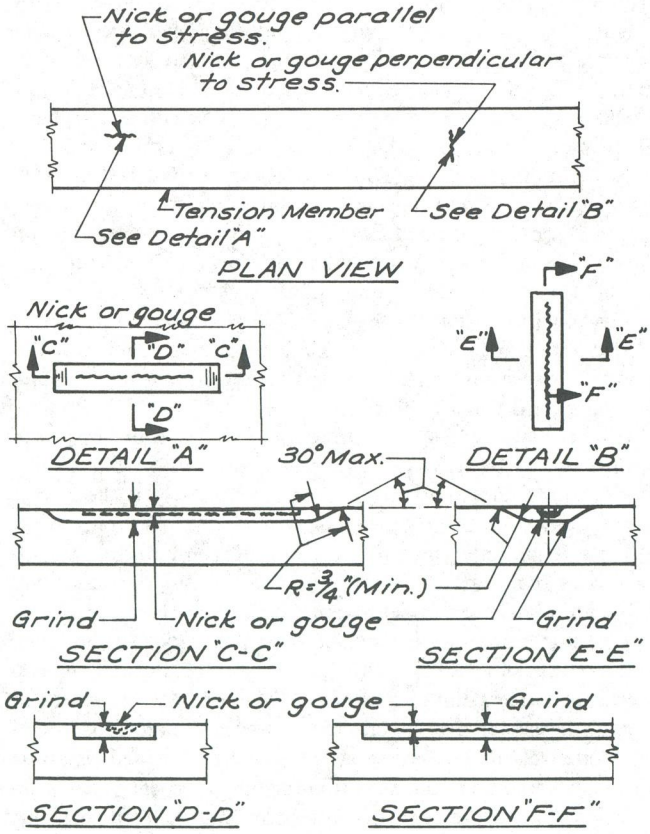

Figure 56. Shallow nicks and gouges.

Dents usually cover a relatively large area so filling these defects is not practical or desirable. The survey of the states (Mishler, *11*), indicated that a few states do consider dents as repairable by welding. Such repair should be done only if the dent is shallow and covers a relatively small area. Depositing a layer of weld metal over a large area can cause more distortion and harm than it corrects. If a dent is considered serious enough that it should be repaired, flame straightening is better suited than welding.

Nicks and gouges that are shallow can be repaired simply by removing the defect by grinding. The purpose here is simply to remove the sharp root that usually is present in such detects and to blend the edges of the defect into the surface of the surrounding material. See Figure 56. The basis for grinding only shall be a stress calculation. If the increase in stress is acceptable, this may be the best method of repair. The ground-out area shall be inspected by magnetic particle or dye penetrant to ensure that the defect has been removed. Nicks and gouges that cause higher than allowable stresses should be repaired by welding. The nick or gouge is prepared for welding by grinding to provide a generous radius at the bottom of the defect. The bottom of the ground-out area should be inspected by dye penetrant or magnetic particle techniques to be sure that there are no cracks present. The ground-out cavity then would be filled with weld metal. The welding procedures (electrode type, preheat, etc.) used should be qualified and be the same as used for welding in a partial repair piece to repair a damaged member. The completed weld should be inspected in the same manner as any load-carrying weld.

Cracks shall be removed by hand grinding, arc or flame gouging. Prior to arc or flame gouging, preheat the work area to 150 F minimum. If arc or flame gouging is used, the groove that is produced should be ground to remove cutting scale before welding. The root of the gouge should be inspected by dye penetrant or magnetic particle to be sure all of the crack has been removed. If the crack is not completely removed, it will propagate through the repair weld that is deposited on top of the crack. In such a situation, the propagated crack may end up being more extensive than the original crack that was removed. The importance of completely removing the crack cannot be stressed too highly. As was stated for the repair of nicks and gouges, the groove remaining after crack removal should be filled using a qualified welding procedure.

It is important to keep in mind that small, poor-quality welds can result in crack initiation as readily as large, full-penetration butt welds. A tensile live-load stress range of only 2 ksi may cause crack growth. During the repair process it may be possible to improve poor fatigue resistant details located in the damaged area.

Stresses shall not exceed the category stresses given in AASHTO Article 1.7.2. Fisher (*14*) and (*19*) contain much helpful information showing classification of bridge details. Figure 57 in this manual shows poor and good examples of longitudinal stiffener welded connections to girder webs. The assumption is made that the connections experience 2 ksi or greater live-load tensile stress. If a repair includes a low fatigue resistant weld, it should be inspection monitored at regular intervals.

Welding Repair Procedure Drawings

Written repair procedures including full-size drawings as necessary to fully describe the deficiencies and the proposed repair shall be prepared. Standard drawings can be prepared to show typical repairs. Repair procedure drawings shall be prepared to show the defect in plan view, elevation, and section as necessary to adequately locate and describe the defect and the proposed repair. A space shall be provided on the sheet for the inspector's signature to show that he had inspected the defect and has found that the drawings accurately describe the defect as it appears prior to repair. The proposed repair procedure shall be described in detail, including at least the following information listed in a proposed sequence of operation:

1. The area of the steel adjacent to the defect shall be cleaned by grinding to expose the surface boundaries of the defect.
2. Plan views and sections of the excavation of defects shall be shown. All air carbon arc gouging shall be followed by grinding to remove carbon pickup and to remove surface irregularities.
3. Magnetic particle testing shall be performed in accordance with specifications to ensure that the limits of the defects have been completely removed prior to welding the excavation.
4. All preheat and interpass temperatures shall be shown. When required, peening, postheat, and stress relief heat treatment procedures shall also be described.
5. Runoff tabs and backup bars shall be shown in detail. They shall be removed after welding and all surfaces shall be finished flush by machining or grinding.
6. The welding procedure specification shall be shown.
7. Nondestructive tesing procedures shall be performed at the completion of the repair; the methods and procedures shall be described on the repair drawing.
8. A space shall be provided for the inspector's signature indicating the work has been acceptably completed in accordance with the approved weld repair.

Repair Example

The example shown in Figure 58, courtesy New York State, shows repair of a weld crack. This crack was not due to accidental damage. However, it is a good illustration of repairing a crack by welding.

Peening Welds

Stout (*5*) states that peening as an adjunct to welding has, in general, been beneficial in preventing weld-metal cracking and in reducing shrinkage stresses and distortion. Peening consists of the plastic flow of weld metal by the application of hammer blows. The weld metal is spread laterally by the peening, so that the inward pull of each bead as it cools is counteracted. However, Stout states that embrittlement of the weld metal may occur when it is peened. Fortunately, this adverse effect is erased by the deposition of another weld pass on top of the peened layer. A heavily peened weld surface layer may be a crack starter. Peening of the first or last layer of weld metal should be considered a dangerous process. Peening of an unsupported first pass may cause tearing.

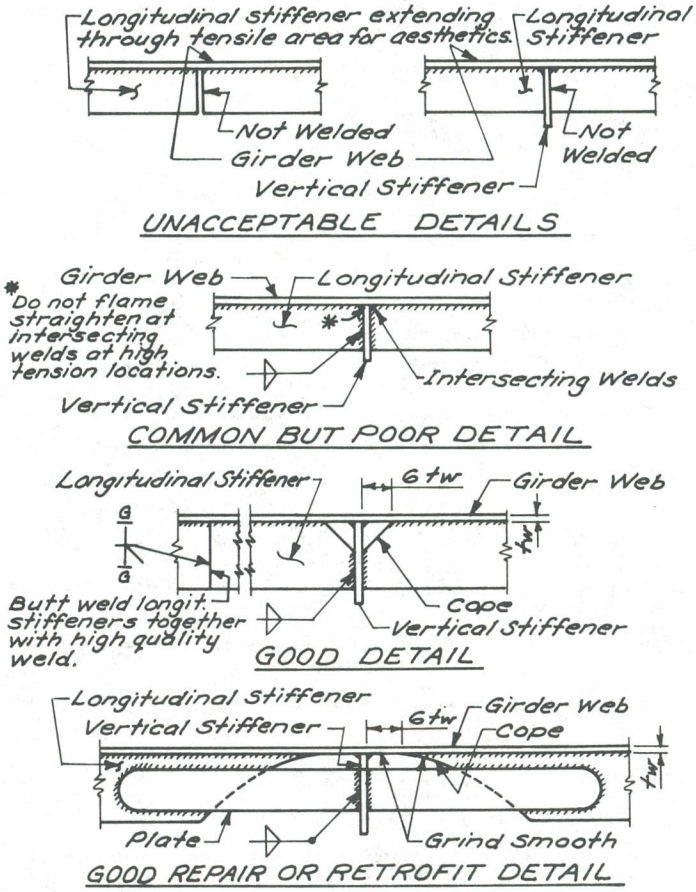

Figure 57. Weld details at stiffeners.

The New York State Department of Transportation will permit peening of intermediate weld layers of large multipass repair welds to control shrinkage stresses and prevent cracking. This permission is subject to departmental approval of the peening process. After the root pass is made, each layer of weld passes is peened. Peening is done with an air gun using a round-nosed peening tool. The peening tool shall be rounded to a 1/4-in. minimum radius at the striking end. All peening energy shall be directed against the convex surface of the weld beads. No peening of base metal or of the fusion boundaries will be permitted. Peening is not permitted closer than 1/16 in. to the edge of the weld metal. Care shall be taken to prevent overlapping or cracking of the weld or base metal. No peening shall be done on the root or surface layer of the weld. Peening may only be done when the weld is between 150 F minimum and 550 F maximum. No procedure or equipment will be permitted that will allow moisture, oil, or other materials to contaminate the weld joint. After each peening, the weld is torch heated before further welding to remove any surface moisture that may occur from the air exhaust of the air gun. As a further precaution against underbead cracking, lubrication of the air line is prohibited because the exhaust of lubricated air could deposit an oil film on the weld.

Fisher et al. (*19*) reports the effectiveness of peening existing fillet weld toes as a means of improving fatigue strength. Peening

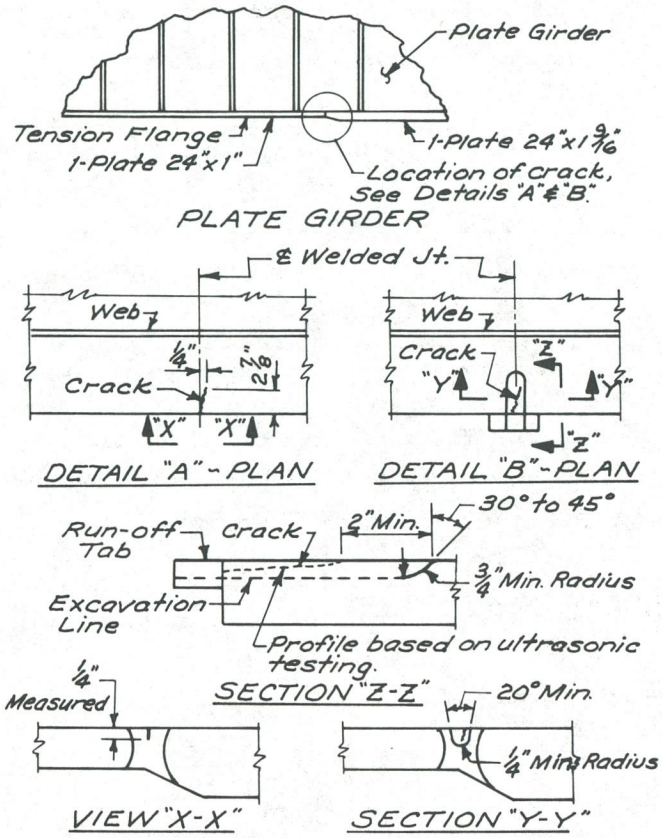

NOTE: The crack was discovered during radiographic inspection. The extent and shape of the crack as shown in Figure 58 was determined by magnetic particle and ultrasonic testing in accordance with the provisions of the New York State Steel Construction Manual (SCM).

REPAIR PROCEDURE

1. Preheat the work area of the flange plate to 150° F minimum. After preheating, air carbon arc gouge as shown in Detail B to remove the crack.
2. Grind the surface of the excavation to remove carbon pickup and irregularities.
3. Perform magnetic particle inspection of the excavation to insure complete removal of the crack.
4. Preheat the flange repair area to 350° F minimum and maintain. Preheat, interpass temperature maintenance, and postheat shall be contiguous operations.
5. Weld the excavation using the submerged arc process in accordance with the provisions of the approved welding procedure specifications.
6. Remove the runoff tab and grind the repaired area flush and smooth.
7. Increase the heating temperature to between 400° F and 500° F. Maintain the postheat temperature for 1-1/2 hours minimum. After this time period, reduce and then remove the heat source and cover the weldment so that the repair weld will cool slowly to ambient temperature.
8. Radiograph the repaired area.
9. Perform ultrasonic inspection after the repaired area has cooled to ambient temperature for at least 24 hours.
10. All NDT shall be done in accordance with the provisions of the SCM.

Defect has been examined prior to repair and appears to be as described.

QA Inspector Date

Repair has been completed, tested and is acceptable.

QA Inspector Date

Figure 58. Crack repair. (Courtesy New York State)

the weld toe was observed to be most effective when the minimum stress was low. This appeared to be directly related to the compressive residual stresses introduced by the peening process. Other tests indicated that peening can be used to retrofit existing bridges where the dead load is in place. Peening of intermediate weld passes is recommended for butt welds of plates thicker than 1 in. Anyone considering peening should become completely familiar with the peening process.

Partial Replacement

If a portion of the damaged beam is to be cut out and replaced, more elaborate preparations are required. See Figure 59. Typically, the damaged portion of the beam is removed by manual flame cutting following previously marked cutting lines. One state has indicated that they use mechanized cutting with the cutting torch being mounted on a traveling carriage. This carriage rides on a track that is attached magnetically to the member being cut. The advantage of mechanized cutting is that the cuts are very straight and smooth, which facilitates fitup with the replacement piece. Traveling mechanisms of this type are available commercially and have been widely used in various fabrication plants.

Good fitup also depends on the care with which the replacement piece is prepared. This means that the replacement piece must match the cutout portion of the bridge member as closely as possible. This can be achieved only by very accurate mea-

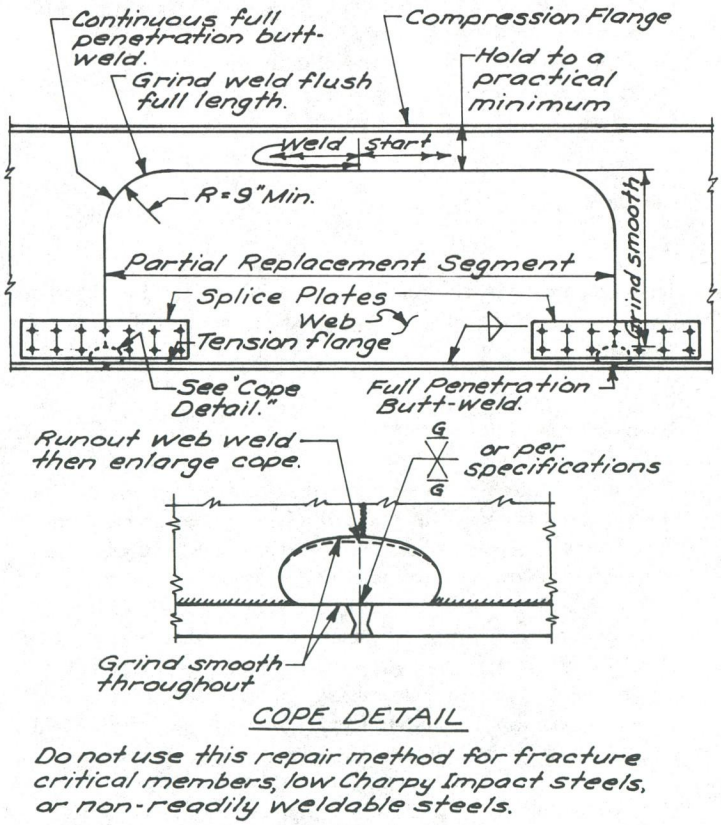

Figure 59. Partial replacement by welding.

surement of the cutout area, transfer of these measurements to the replacement part, and very accurate cutting of the replacement part. Extra time and care given to this operation will avoid the problems that arise when trying to weld pieces having poor fitup.

Whenever possible, use the in-place member as a template or pattern for marking the exact geometry of the cutout on the replacement piece instead of transferring measurements. The State of Illinois has had success in using the following procedure.

After the damaged portion of the bridge member is cut out and the cut edges are prepared for welding, the replacement part of the web is hoisted in place against the bridge member. New sections of the web and flange are welded in place separately. The web-to-flange fillet weld is made after the new sections are welded in place. The replacement part has been rough cut oversized so it overlaps the cutout in the in-place member. After the replacement part is positioned in place against the bridge member, the outline of the cutout area is marked onto the replacement part. The replacement part then is removed and cut to the exact shape of the cutout area by making the cuts along the marked lines. While this procedure requires extra handling of the replacement part, it does produce an exact fitting replacement part.

The extra time and handling effort that is required is justified since less effort will be required in the actual welding operation. The better joint fitup that is achieved will provide savings in welding time and welding consumables and will produce better quality welds. Illinois also prefers to angle the ends of the cutout area instead of making these cuts vertically. Their reason for angling these cuts away from the vertical relates to welding. They believe that vertical welding with low-hydrogen electrodes is difficult and by orienting the joints away from vertical, it becomes easier to produce a sound weld deposit. The cutouts made by most states are rectangular, with horizontal and vertical cuts being used to remove the damaged portion. Either method can give satisfactory results.

Careful consideration must be given in making the flange and web welds. See Figure 59. A cope hole in the web is normally needed to obtain a satisfactory flange butt weld. However, ending the web fillet welds at the cope hole reduces the stress category at this point to E or possibly D, depending on the cope hole radius. One of two choices should be made; extend the partial replacement segment to points where the tensile live load stress meets category E or D, or add web splice plates similar to those shown in Figure 59. These plates shall be fastened with high-strength friction bolts. Use of these plates should increase the stress category to B.

Whenever possible, butt welds shall be welded from both sides. The joint preparation shall be in accordance with AWS and AASHTO specifications. If access to the root side of the joint is not available, of course all welding must then be done from one side. This will require much more careful fitup to obtain good penetration without burnthrough. Some users weld a splice plate on top of one-sided welds. For good fitup, the weld reinforcement should be ground away before attaching the splice plate. This is the procedure used in Washington State when repairing laced members, since there is no access to the root side of weld joints. The splice plates are sized to carry the full load on the member element. Adding welded splice plates to strengthen tension members or to strengthen tension areas of members may be considered. See Figure 60. The continuous weld fastening the splice plate to the member is a category B

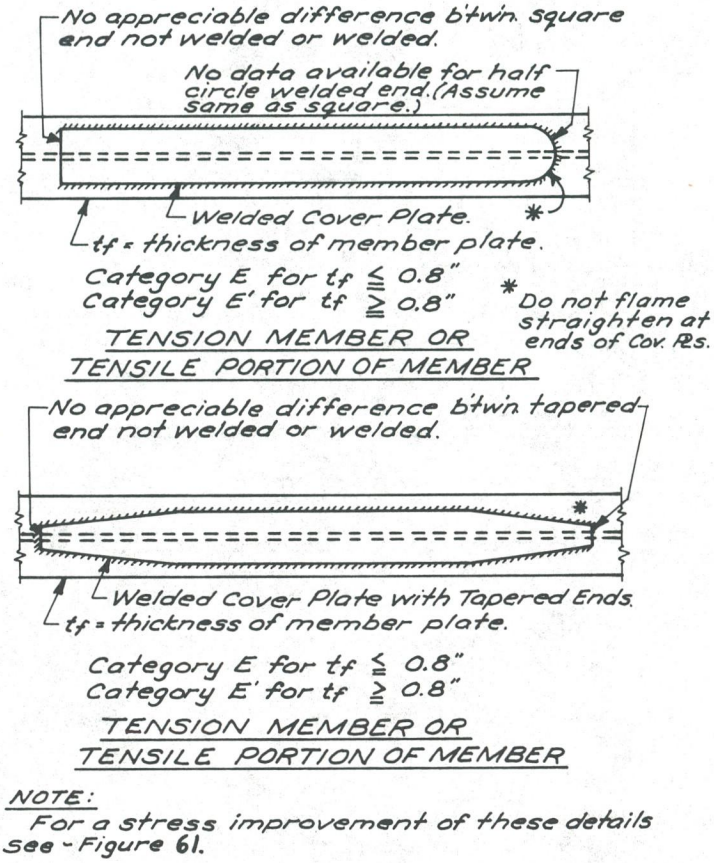

Figure 60. Welded cover plates.

weld. Refer to AASHTO Article 1.7.2. The stress for category B should not be exceeded. The weld category at the plate ends is category E or lower. If feasible, bolted splice plates or welded splice plates with bolted ends, Figure 61, are much preferred. If it is necessary to use welded splice plates with no bolting, they shall be extended to a point where the tensile live load stress range meets AASHTO specifications.

It is beyond the scope of this report to show all of the diverse types of welds, number and sequence of interpasses, back-gouging requirements, and other specific weld detail information that may be required for each individual repair. This information should be shown as appropriate on the Welding Repair Procedure drawings.

Nondestructive Testing (NDT)

General

All repair welds should have NDT to ensure high quality. High-quality field repair welds are more difficult to attain than high-quality shop welds made during initial fabrication. The reasons include probable higher shrinkage stresses, manual welding, all-position welding, and field weather conditions. Therefore, in order to ensure high-quality repair welds, NDT should be equal to or better than NDT of shop welds. Types of NDT used are dye penetrant, magnetic particle, radiography, and

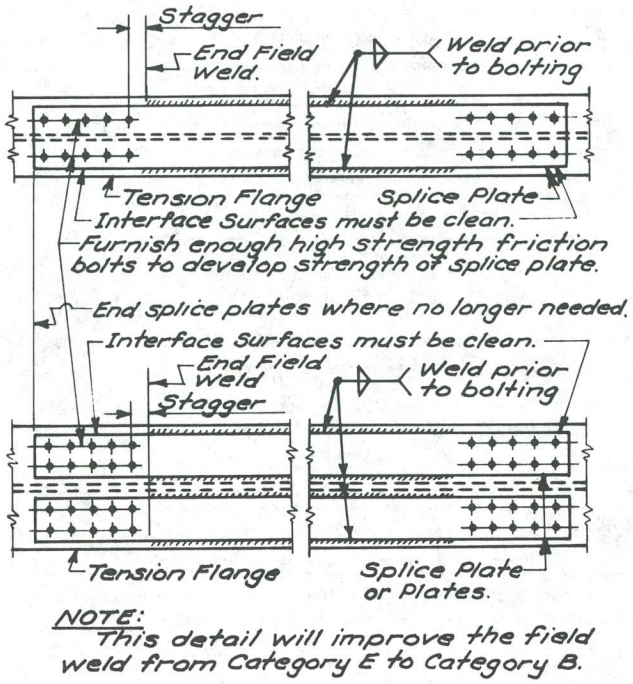

Figure 61. Splice plate details.

ultrasonic. New York (*28*) and Fisher et al. (*19*) contain much useful NDT information. Surfaces being inspected should be clean and dry and free of oil, rust, loose mill scale, and paint. Complete testing details are not presented in this manual.

Radiographic Testing

All tension repair welds, including repair of defects in tensile areas of primary members, should be fully radiographed. Radiographic testing of other welds may be required by the inspector or as shown in the plans and/or specifications. All repair compression and shear joints in a member shall be radiographed when radiographs of tensile areas show excessive defects. All welds to be radiographed must be prepared by grinding. Particular care must be taken in grinding fillet welds to avoid grinding defects. Transverse nicks caused by the grinding tool must be avoided. Extension bars and runoff plates shall be removed prior to radiographing. Radiography shall be in accordance with current practice, including ASTM E-94, "Standard Recommended Practice for Radiographic Testing," and ASTM E-142, "Standard Method for Controlling Quality of Radiographic Testing." To be acceptable, welds tested by radiographic inspection should show no cracks regardless of the direction of stress. Porosity or fusion-type discontinuities should not exceed the same acceptable criteria used for shop welding.

Ultrasonic Testing

Ultrasonic testing should be used as a supplement to radiographic inspection. Ultrasonic testing should be used at the same repair welds where radiographic testing is required. Testing with both Straight Beam Search Units and Angle Beam Search Units may be necessary. To be acceptable, welds tested by ultrasonic inspection should show no cracks regardless of the direction of stress. Porosity or fusion-type discontinuities should not exceed the same acceptable criteria used for shop welding.

Magnetic Particle Testing

Magnetic particle testing should be used as a supplement to radiographic and ultrasonic testing. Magnetic particle testing should be used at the same repair welds where radiographic and ultrasonic testing is required. All fillet welds in tension areas not possible to radiograph or ultrasonic test should be magnetic particle tested. Magnetic particle or dye penetrant testing should be used to ensure that nicks, gouges, or cracks have been removed from ground-out areas. Magnetic particle testing may be superior to radiograph or ultrasonic testing in detecting surface cracks.

Testing shall be performed in accordance with ASTM E-709, "Standard Method for Dry Powder Magnetic Particle Inspection," using the prod technique. Arcing, which may damage base metal, must be controlled by proper testing techniques. Wherever magnetic particle inspection is performed on ASTM A-588 steel or any steel with a minimum specific yield stress exceeding 50 ksi, aluminum prods should be used on the test equipment. The use of copper prods is not permitted on such steels. Consideration shall be given to using external electrical fields which prevent arcing. Pairs of prods should be oriented in two directions approximately 90 deg apart at each inspection point to detect both longitudinal and transverse discontinuities. The prod positions should overlap as the testing progresses to ensure 100 percent inspection of the areas to be tested. Grinding may be required to provide proper electrical contact and to remove surface irregularities that interfere with interpretation of test results. To be acceptable, welds tested by magnetic particle inspection should show no cracks. Porosity or fusion-type defects should not exceed the same acceptable criteria used for shop welding.

Dye Penetrant Testing

This inspection method is limited to the detection of discontinuities that are open to the surface. This inspection method is an inferior substitute for magnetic particle testing. Magnetic particle testing can detect tighter cracks, and surface cleanliness is not as important. Dye penetrant is not an acceptable substitute for radiograph or ultrasonic testing. The principal advantages of dye penetrant testing are the ease with which the tests are conducted and the minimal skills involved. It is considered the most portable of all methods. It may be used to check compression welds and to ensure that nicks, gouges, or cracks have been removed from ground-out areas. Its use during welding may prevent later rejection when ultasonic and radiographic inspection is used. Dye penetrant tests should be performed when the steel is between the temperatures of 40 F and 110 F. All testing shall be performed in accordance with the provisions of ASTM E-165, "Method B, Visible Solvent, Removable Penetrant." The surface being inspected shall be cleaned in accordance with ASTM E-165. Surface irregularities that interfere with the interpretation of test results should be removed by grinding. All welds should be smoothed by grinding prior to testing. To be

acceptable, welds tested by dye penetrant inspection should show no cracks. Porosity and fusion-type defects should not exceed the same acceptable criteria used for shop welding.

Visual Inspection

With 10X magnification, comparatively small cracks can be detected. Under good conditions, surface cracks between 0.125 in. and 0.25 in. minimum length and 0.05 in. minimum depth can be seen. The surface must be clean. This simple and inexpensive method of detection cracks should be used as backup inspection for all NDT.

Weld Inspection

Weld inspection, as defined here, includes monitoring all aspects of the repair welding project. Included in the weld inspection are:

1. Preparation of metal base.
2. Monitor required preheat prior to any arc or flame gouging. After any arc or flame gouging, grind surface to remove carbon pickup and irregularities.
3. If weld is a nick, gouge or crack repair, monitor magnetic particle test to ensure that the limits of the defect have been completely removed prior to welding.
4. Protection of electrodes.
5. Fitup of parts to be welded.
6. Check for required runoff tabs and backup plates.
7. Preheat.
8. Preheat, welding, and postheating shall be one continuous process.
9. Observe welding process to ensure compliance with approved welding procedure specifications and plans.
10. Postheat.
11. Remove any runoff tabs and backup plates.
12. Grind smooth in accordance with specifications and plans.
13. Radiograph.
14. Ultrasonic inspection.
15. Any other NDT inspection.
16. If weld is a low-fatigue resistant weld, establish a field monitoring schedule.

Bridge Traffic

Bridge traffic during welding can create vibration or stresses of sufficient magnitude to impair weld quality. Prohibition of any traffic that causes motion or stress on the part being welded is recommended.

BOLTING

Bolting may be used as a repair method or as a supplement to other repair methods. Replacement of a damaged element with a new piece of steel fastened with high-strength bolts is regarded as the safest method of repair. See Figure 62 for a method of replacing a damaged segment of a plate girder using high-strength bolts. All bolts shall be high-strength friction bolts

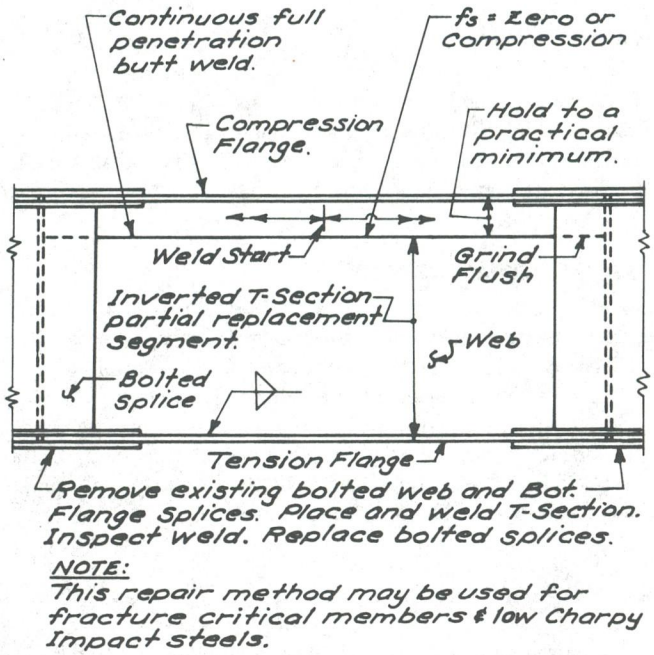

Figure 62. Girder repair.

unless existing high-strength bearing bolts are being replaced with new high-strength bearing bolts. It is believed that all agencies have the ability to design, prepare plans and specifications, and inspect fabrication and installation of common bolted splices. Therefore, this manual does not include guidelines for these aspects of bolted splices.

Fracture Critical Members

Repair procedures for fracture critical members shall be more conservative than repair procedures for nonfracture critical members. Repairs shall be made with bolted splices. If other methods are used, such as flame straightening, elements shall be fully strengthened by adding new bolted splice material. Enough new material shall added so that the existing material can be neglected in computing stresses. Partial or full replacement shall be considered.

Use of Bolted Splices

The use of bolted splices is generally difficult, time-consuming, and expensive. This is particularly true when adding bolted splices to welded members. Replacing riveted elements or supplementing their strength with bolted material is not so difficult and should always be considered. Tensile areas of A-514 and A-517 steels shall be repaired by bolting. If other methods are used to repair these steels, they shall be fully supplemented by bolted splicing.

Areas of elements that have low Charpy impact values shall not be repaired by welding alone. These areas may be repaired by welding for durability but shall have full strength restored by splicing with high-strength bolted splices. Low Charpy im-

pact values are defined as those values which do not meet current AASHTO specifications.

Adding a bolted plate to a welded plate girder is difficult and expensive. The length of plate required is generally long and holes must be drilled through a template. The repair shown in Figure 62 may be less expensive. Figure 61 shows an acceptable method that may be much less expensive.

PARTIAL REPLACEMENT

Replacing a segment of a member will normally be accomplished by welding, bolting, or a combination of welding and bolting. Partial replacements shall have the same high-quality workmanship and rigorous inspection given other welding and/or bolting repairs. Partial replacement is discussed in the "Guidelines for Selection of Repair Method," and in the "Guidelines for Repair of Damage" under "Welding."

COMPLETE REPLACEMENT

When removing members, care must be taken not to damage the connecting metal left in place. Any nicks or gouges should be repaired in accordance with the guidelines given in this manual. The interface area shall be cleaned. Lengths of replacement members shall have the same length as the original member, including the effect of temperature and camber. Jacking may be necessary to install the new member. The entire replacement process requires careful inspection. Complete replacement is discussed in the "Guidelines for Selection of Repair Method."

MISHANDLING DAMAGE

Accidental damage at steel fabrication plants is rare. Handling accidents during transportation are infrequent but do occur. A primary reason is the condition of the access road. If the access road has a steep transverse slope or a soft surface, the hauling vehicle and steel member may tilt enough to cause the member to be unstable. If the member is relatively weak about the vertical axis, such as a plate girder, plastic bending may result. On rare occasions, the contractor's handling equipment may be inadequate or pick up points may be too few in number. Guidelines for members damaged by vehicles may also be used as guidelines for mishandling accidents.

FIRE DAMAGE

Steel bridges will suffer damage when subjected to high temperatures due to fire. The damage will normally consist of plastic bending due to exceeding the yield strength at the elevated temperature or it may be due to buckling from thermal stesses that exceed the elastic stability stress.

Research on flame straightening has indicated that exposure to temperatures below 1,200 F does not adversely affect the properties of common bridge steels. ASTM A-514 and A-517 steels are an exception and must not be subjected to temperatures higher than the tempering temperature which is approximately 1,150 F. It may be difficult or impossible to determine the temperature to which the metal has been exposed due to a fire. Nonenclosed bridge fires normally heat to lower temperatures than enclosed building fires, provided the fire combustibles are the same. It is recommended that specimens be taken and steel properties determined.

If steel properties have not been degraded, the guidelines for members damaged by vehicles may also be used as guidelines for fire damage.

Flame straightening of fire-damaged members will normally cost much less than replacement of members. The flame straightening repair of the McChord Air Force Base Hangers 1 and 2 saved approximately $1,250,000 (Holt, *16* and *20*). Partial replacement may also be used for repair of fire-damaged bridges (Stolldorf, *29*). A combination of repair methods should be considered for the repair of bridge members damaged by fire.

APPENDIX A

RESEARCH REPORT

INTRODUCTION AND RESEARCH APPROACH

Introduction

Steel bridge girders and truss members are often damaged by overheight vehicle impact. On rare occasions, loads being carried by trucks have broken their binding chains while crossing through truss bridges. These loads have then turned laterally or fallen from the vehicle and damaged steel members. Overwidth vehicles and out-of-control vehicles have also caused damage. Damage due to mishandling during construction has occurred. Fire damage occurs on rare occasions.

Severity of damage varies from minor nicks or dents to complete fracture of steel elements. Some bridge engineers have the impression that replacement is the conservative and safe method of repair. Replacement of an entire bridge member is both costly and time consuming, and such replacement is usually a very complex operation. The entire replacement of a steel truss member or the entire replacement of a plate girder may also induce stresses that are very difficult to analyze. Replacement may be restricted to replacing a portion of a critically damaged member. Replacing a portion of a member requires assessment of damage and evaluation of repair techniques. At present, the decision to repair or replace a damaged member and the techniques used are determined on the basis of the inspector's or engineer's evaluation of the situation, with little published information available for guidance.

Although flame straightening of bridge members has been successfully used for several decades, it is not a generally accepted method by many highway agencies. It is believed that the primary reason for this nonacceptance is the lack of practical guidelines for assessment of damage and methods of repair.

The primary objective of this project was to produce a manual of practice for dealing with the entire problem of damaged steel bridge members. This manual of recommended practice is contained in Chapters One through Five of NCHRP Report 271.

Research Approach

The research was accomplished by completing seven tasks described as follows:

Task 1

Review existing information and obtain and review additional information. The Phase I report (*11*) for this project contained useful information. This information was used, as appropriate, in accomplishing the continuation phase. The Phase I report also contained a good bibliography. A number of the references were obtained and reviewed. The first-phase report titled "Evaluation of Repair Techniques for Damaged Steel Bridge Members" was prepared by H. W. Mishler and B. N. Leis as part of NCHRP Project 12–17. Several reports published since Phase I were reviewed and used as appropriate.

There was very little information in the Phase I report regarding assessment of damage. For purpose of definition, assessment is used to describe the process of deciding what, if anything, should be done with a particular damaged member. Personal visitations were made to the States of Colorado, Kansas, Maryland, Massachusetts, Michigan, New Hampshire, New Jersey, New York, Pennsylvania, Texas, and Washington. A high priority was placed on visiting eastern states because of the greater number of and subsequently higher incidence of damage to steel girder bridges in that area. The project researchers had more personal knowledge of through truss vehicle damages. The State of Washington contributed valuable additional information. A steel fabricator in Pennsylvania who has successfully repaired damages for several eastern states was visited. Personal visitations were made to Dr. Richard E. Holt of the University of Washington, Dr. John W. Fisher of Lehigh University, and Dr. Karl Frank of the University of Texas.

Task 2

Evaluate existing techniques used to assess damage. Damage assessment was evaluated in detail. The data evaluated were obtained from Task 1. As a minimum, the following items were considered in making the evaluation:

- *Inspection of Damage*
  1. Office responsible for inspection.
  2. Inspector qualifications.
  3. Initial inspection and action.
  4. Inspection sequence and record.
  5. Inspection equipment and skills.
  6. Inspection report: (a) standard form, (b) contents.
  7. Monitoring of repairs.
- *Assessment of Damage*
  1. Assessment of damage by whom and where.
  2. Strength of damaged member.
  3. User inconvenience and speed of repairs.
  4. Fracture critical members.
  5. Primary members.
  6. Secondary members.
  7. Type of steel and steel properties.
  8. Maximum allowable strains.
  9. Radius of curvature at yield point strain
  10. Calculation of damage curvature.
  11. Nicks and gouges.
  12. Cracks.

- *Selection of Repair Method*

1. Method of repair: (a) flame straightening, (b) hot mechanical straightening, (c) cold mechanical straightening, (d) welding, (e) bolting, (f) partial replacement, (g) complete replacement.
2. Combining methods of repair.
3. Strength of repair method.
4. Effect of toughness of repair method selected.
5. Durability of repair.
6. Relative cost.
7. Aesthetics.
8. Selection of repair method-table.

There was very little documented information on existing techniques for assessment of damage. In general, assessment of damage was largely judgmental supported by brief, if any, calculations. The task of evaluating existing techniques used to assess damage became less. The task of preparing guidelines became greater.

Task 3

Evaluate existing techniques used to repair damage. The primary source of data was the information contained in the Phase I report. However, all of the information sources described in Task 1 were used as appropriate to evaluate repair of damage. As a minimum, the following subjects were evaluated:

1. Office responsible for repair method.
2. Accomplishment of work by state forces or contractor.
3. Equipment required.
4. Flame straightening: (a) fundamentals, (b) heat patterns, (c) predicting number and sizes of vee heats, (d) temperature, (e) effect on steel properties, (f) using an auxiliary force, (g) peening, (h) heat location limitations, (i) flame straightening girder bridges, (j) flame straightening trusses.
5. Repair inspection.
6. Final alignment tolerances.
7. Hot mechanical straightening.
8. Cold mechanical straightening: (a) procedure, (b) repair inspection.
9. Welding: (a) basic criteria, (b) defect repair, (c) welding repair procedure drawings, (d) repair example, (e) peening welds, (f) partial replacement, (g) nondestructive testing, (h) weld inspection, (i) bridge traffic.
10. Bolting: (a) general, (b) fracture critical members, (c) use of bolted splices.
11. Partial replacement.
12. Complete replacement.

Task 4

Prepare guidelines for damage assessment. Knowledge gained during this project indicates that many states have not organized the problem of dealing with accidental damage. A lack of advance preparation can lead to extraordinary pressure during an accident and result in decisions that are inappropriate. Therefore, one of the objectives of the manual of recommended practice is to set forth an organized procedure for assessment of accidental damage.

Based on the information gathered in Task 1 and the accomplishment of Task 2, guidelines for inspection and assessment of damage were prepared. The best techniques for assessment of damage were incorporated in the manual. As a minimum, all of the factors addressed in Task 2 were incorporated in the guidelines. Guidelines for selection of repair method was accomplished as a part of Task 4.

Task 5

Prepare guidelines for repair of damage. Based on the information contained in the Phase I report, supplemental information gathered during Task 1, and the accomplishment of Task 3, guidelines for the repair of damage were prepared. As a minimum, all of the factors addressed in Task 3 were incorporated in the manual of recommended practice.

Recommended repair methods are described in detail. Examples of both successful and unsuccessful repairs are described as appropriate. Repair techniques were categorized and related to type of damage and service life as appropriate.

Task 6

Prepare manual of recommended practice. This manual is addressed to bridge engineers. It is believed that portions will be useful to highway administrators, members of repair crews, and others. It is a practical user's manual for dealing with accidentally damaged steel bridge members. Guidelines are based on the best information currently available.

The outline for sections of the manual of recommended practice are as follows:

- Inspection of damage.
- Guidelines for assessment of damage.
- Selection of repair method.
- Guidelines for repair of damage.

These sections have been subdivided to include factors described in Tasks 2 and 3.

Task 7

Preparation of final report.

FINDINGS

Introduction

The primary purpose of this project was to prepare a manual of recommended practice for dealing with damaged steel bridge members. The main text (Ch. One through Ch. Five) is the manual. Nearly all summary data, mathematical formulas, examples, figures, and tables are presented in the manual.

Flame Straightening

A principal finding of this report is that although flame straightening has been successfully used for more than four decades, many states do not use this method. It is believed that many states consider this repair method to be an art rather than an engineering process. The findings in this report indicate that the method can be analyzed using basic engineering fundamentals. Certain factors such as predicting the number of heats required to straighten a member cannot be predicted precisely in advance; however, by checking the misalignment during straightening and varying the number and location of heats, precise results can be obtained. A finding of this report is that flame straightening performed in accordance with guidelines presented in the manual will not significantly degrade steel properties. The most current testing literature agrees with this finding.

Effect of Vehicle Damage

It has been found that possible degradation of steel properties due to vehicle-caused damage has been largely ignored by states that use cold mechanical straightening, hot mechanical straightening, or flame straightening. This report sets maximum allowable strains due to vehicle impact, based on current state-of-the-art information. A convenient method for measuring curvature strain has been developed and included. Curvature measurements provide a means to assess damage and to calculate the number and location of flame straightening heats. One cycle of cold straightening does not change steel properties provided the straightening loading exactly reverses the damage loading. Since the damage normally occurs with a high rate of loading, some change in steel properties should be expected. It has been found that members may have been inadvertently straightened that were not plastically deformed. A simple formula has been developed and included that should eliminate straightening of members or portions of members that have not been plastically deformed.

Inspection Procedures

From information gained through this research project, it is recommended that personnel responsible for inspection and damage assessment develop their specific procedures prior to the time when it is required to respond to a damage incident. This will ensure more uniform treatment and more orderly progress. Establishment of procedures, without pressure from an emergency, should result in best practices. The state bridge engineer is normally responsible for the preparation of repair plans. Since the bridge engineer is responsible for repair design, this office should be responsible for inspection. One major component for assessment of damage is the field inspection of damage. The bridge engineer's office should be best qualified for inspection of damage. Where organization constraints place the responsibility with others, cooperative action with bridge engineer personnel should be a requirement. The inspection of damaged steel bridge members should be performed by, and/or with direct supervision of, structural bridge engineers.

Existing Assessment of Damage

The assessment of damage appears to be largely judgmental supplemented by brief calculations. This procedure is adequate during the inspection phase to determine whether to restrict traffic or close the bridge. These preliminary calculations are generally acceptable to determine the necessity of preliminary strengthening in order to prevent further damage to the bridge. During assessment of damage, a complete evaluation of strength should be made. This analysis should include strain levels due to the damage. Stresses should be compared to the design stresses. All preliminary calculations and decisions made during the inspection phase should be reviewed.

Fracture Critical Members

Some states do not make a repair distinction between primary tension members and fracture critical members. Fracture critical members or members components are tension members, or tension components of members, whose failure would be expected to result in collapse of the structure. Assessment of damage and selection of repair methods will be more conservative for fracture critical members than for nonfracture critical members. Fracture critical members should be repaired with bolted splices. If other methods are used, such as flame straightening, elements will be fully strengthened by adding new bolted splice material.

Repair of A-514 and A-517 Steels

Welding repair of A-514 and A-517 steels is not recommended. The field welding difficulties are the same as welding lower strength steels. These difficulties include probable high shrinkage stresses, manual welding, all-position welding, and weather conditions. The major difference is that A-514 and A-517 steels are high-strength quenched and tempered steels. It is difficult to field weld these steels without injuring the quenched and tempered microstructure.

Straightening repair of A-514 and A-517 steels is not recommended as a normal procedure. Recent literature acknowledges that flame straightening will not degrade A-514 and A-517 steels provided heating temperatures are kept below the tempering temperature of 1,150 F. Examples of successful field straightening of these steels in bridges are unknown. Where other repair methods that give greater assurance against degradation are not possible, flame straightening of these steels must be approached with caution, and with a thorough knowledge of the adverse metallurgical consequences that may occur. Bolting repair of A-514 and A-517 steels is recommended. Very few overpasses have been constructed using A-514 and A-517 steels. The preceding recommendation will have very little effect on repair of damaged bridges.

Order of Repair

Repair work will generally be expedited by starting in the reverse order of damage. This normally means at locations away from the impact point. Members at these locations will have the least amount of bending curvature and the least amount of end rotation. It may not be possible to completely straighten or

repair these members because adjacent member damage may have rotated member ends. It is frequently necessary to work in partial cycles toward the point of impact. This repair sequence will generally be necessary at the point of impact. Plate girders may have a combination of lateral flange bending, flange rotation, and a dish-shaped flange deflection on the impact side. The girder web will usually be deflected laterally, and may have an indentation at the impact point. Straightening will usually be accomplished by partially straightening the web, the flange dish, the flange rotation, the lateral flange displacement, and then repeating this cycle until all components are straight.

Peening

Peening during the application of flame straightening heats is recommended. Tensile stresses are created on the concave side of the bent member as the beam starts to straighten. These tensile stresses act to resist the straightening action. Light peening of this area adds very localized compressive stresses, which reduce the tensile stresses. By reducing these tensile stresses, there is less resistance to the straightening action and a greater amount of straightening will occur during each heating and cooling cycle. Reducing these tensile stresses, which are residual, is beneficial to strength properties. It is estimated that one-third to one-half of the residual stress in rolled steel can be removed by peening. Peening of intermediate weld passes is recommended for butt welds of plates thicker than 1 in.

Fatigue Critical Details and Welding

The presence of fatigue critical details should be considered in making both welding and straightening repairs. Fatigue cracks can originate at points having only 2- to 2.5-ksi tensile stress range. Once fatigue cracks have initiated, they will propagate into member elements having higher stress ranges, even though these elements do not have fatigue-prone details. Because of continuity by welding, cracks will propagate more readily into other member elements of welded members than into riveted members. The manual recommends maximum curvature strains due to damage and relates these strains to maximum AASHTO stress categories. Welding can be a successful repair method; however, poorly executed weld repairs in tensile areas can be very dangerous and in some instances may do more harm than good. Members to be repair welded should be weldable steels and meet AASHTO Charpy impact criteria. The manual places strong emphasis on high-quality welding, nondestructive testing, and rigorous inspection.

Documentation

Documentation of damage assessment and repair appears to be minimal. There is a tendency to rely on the knowledge and expertise possessed by one or two individuals in a particular state. When these individuals retire or change jobs, substantial knowledge may be lost. A cross-referenced record system should be established to provide access to all damage incidents. The system should provide ready access to the inspection reports. Damage categories should include type of structure, cause of damage, type of steel, and type of member. Assessment calculations, repair calculations and repair details should be included.

COMMENTARY

Introduction

Replacement and repair-in-place techniques have been developed and successfully used for the repair of damaged steel bridge members. Partial and/or complete replacement of damaged members is often chosen for repair rather than the technique of straightening the damaged members in place. Many agencies have chosen to replace, because straightening techniques have been thought of as an art rather than an objective engineering process. A principal reason for this belief has been the lack of the development of an engineering process for the assessment and repair of damage. The manual of recommended practice presents the concept of repairing damaged members on an engineering basis. When the assessment of damage is related to maximum allowable strains and damage curvature, repair by straightening can be more objectively analyzed.

Most of the findings in the form of technical data, tables, charts, and recommended practice are included in the manual. To facilitate the use of the manual by bridge engineers, concise background information and references are part of the manual, and are not repeated here. The commentary included here is material that is not required by users of the manual, but provides additional basis for manual guidelines. For all bridge design, the Standard Specifications for Highway Bridges (*1*) adopted by the American Association of State Highway and Transportation Officials (AASHTO) sets forth minimum design standards and should be followed in all repair work.

Present Practices

The first phase study of this project, made by Battelle, Columbus Laboratories, found that only 6 states, of those responding, make extensive use of flame straightening for repairing damaged steel members. Twelve states occasionally use flame straightening, and 17 states rarely or never use flame straightening. The Battelle study showed 24 states use mechanical straightening, while 12 states do not, and 34 states, of 36 states responding, will allow partial and/or complete replacement of a damaged member in conjunction with welding. Since so many states allow mechanical straightening and replacement by welding, it is believed a more engineering-oriented knowledge of flame straightening will increase the use of this effective means of damage repair. Personal contact was made, primarily with eastern states, to determine present practices of inspection, damage assessment, and repair procedures. All 6 states that extensively use flame straightening, and 15 states that occasionally or never use flame straightening, were contacted. Engineers from New York advised that they generally repair by flame straightening and welding. New York is included as one of the states that extensively use flame straightening. The guidelines in the manual incorporate the objective evaluation of information gained from the meetings with personnel from these states.

All states contacted indicated that the inspection, assessment, and repair of damage to steel members is under the responsibility

of the bridge engineer. In some cases, because of decentralization, the responsibility of the bridge engineer may be in the form of overview rather than direct participation. Inspection, assessment, and repair of damage should be under the direct responsibility of the bridge engineer. Because of the critical nature, and often difficult inspection characteristics, of damaged steel members, inspection and assessment should be accomplished by an engineer competent in this work. Inspection reports are normally letter or memo type, and include pictures and sketches of the damage. Some states make string line measurements of damage displacements, and all inspections report critical features, such as tears, cracks, sheared bolts and rivets, cracked welds, and distorted members. The guidelines recommend that a complete inspection form be established by each agency to ensure that all elements of the damaged structure are adequately inspected. More formal damage reports will result in better documentation and will be useful in the future. They will eliminate the prevalent practice of relying on memory. All states indicated that in most cases, they know the type and grade of steel. Most steel bridges have used A-7, A-36, A-242, A-440, A-441, or A-588 grade, with very little quenched and tempered steel. The grade of steel needs to be known to accomplish good weld repair. Most agencies believe these steels are all weldable using the proper techniques.

The cause of damage does not normally affect the agencies' type of repair. In the case of fire damage, degradation of the steel may be more closely evaluated than in the case of collision damage. If it is established that no appreciable degradation occurred in the steel, the recommended guidelines can be applied to fire-damaged members.

Most agencies contacted use existing plans and stress calculations to assess the strength of damaged members. Because of the severity of some damages, many of those contacted believe that these calculations may have little meaning, and assessment of the damaged condition is based on judgment and past experience. When the damage is such that nothing needs to be done, the strength of the damaged member can be established by calculations. Assessment is generally separate from inspection. The selection of repair method is made by most agencies after the damage assessment phase. Alternate repair methods are normally considered and generally the selected repair will be based on cost, user inconvenience, and aesthetics. Some agencies indicated that repair of damage to fracture critical members would be the same as for redundant members. However, the majority indicated special measures would be taken. These special measures ranged from replacement of the member to flame straightening with special external supports during repair. All agencies indicated that repairs should restore structural strength, anticipated life, and durability to equal the originally designed conditions. Partial and/or complete replacement of damaged members is acceptable to all agencies contacted. No well-defined and comprehensive method for damage assessment was found that could be directly incorporated in the manual. The method of damage assessment presented in the manual relates maximum allowable strain to damage curvature. It is recommended that more accurate measurements of damage displacement be made during inspection. More displacement measurements may allow a more accurate calculation of the damaged member strength to the total structure. Also, these measurements will provide the means to calculate damage curvature by the method of individual displacements as described by Williams (*2*), and as shown in Figure 2 in Chapter Three. On the basis of the damage curvature, the guidelines can be used to assist in the selection of the repair method. If flame straightening is selected, the damage curvature calculations provide the means to determine the location and approximate number of heats necessary to straighten the member. By more fully assessing the damage, considerable time may be saved during the repair process. Assessing damage by this engineering approach should lead to wider acceptance of flame straightening.

It was determined that only 4 states accomplish flame straightening with their own personnel. Washington and New York do most of their own work, and Michigan does its own work when the job requires less than 2 weeks time. New Hampshire does a minor amount of work with bridge maintenance welders. The other states accomplish flame straightening by contract. No agency was found to have a formalized training program. Training of state forces is accomplished by on-the-job training. New York engineers stated that any certified welder can perform heat straightening with adequate instructions and training. The states that do their own straightening have engineering personnel who either perform or closely supervise the work. Agencies agree that all types of bridge members can be straightened. Some of the eastern states expressed reservations with regard to trusses, while Washington's majority of work is on truss members. It is believed that the experience of an agency is the main factor leading to reservations regarding structure type. Also, reservations may be caused by the heating tip size normally used. Some practitioners advocate the use of single orifice heating tips, while others believe larger multiorifice tips are preferred. In the case of smaller members, notably found in trusses, a larger tip could cause overheating. Heating tip size should be determined by the size of member, as explained in the manual. Most states recommend a heating temperature of approximately 1,200 F. for carbon and low alloy steels. Quenched and tempered steels should never reach the tempering temperature, and should not be heated to more than 1,050 F. Those states that allow flame straightening believe that acceptable heating temperatures do not have a significant degrading effect on the steel. This is substantiated by the fact that AASHTO specifications allow heat curving. States that repair with flame straightening apply auxiliary force to reduce member stresses and to facilitate the straightening process. Generally the only cold bending that is allowed is on secondary members or lacing bars. Hot bending is allowed by some states. Present practice regarding peening of the portion of a member opposite the heated area is divided. Some practitioners believe it is beneficial, while others do not. The guidelines recommend peening since it should cause stress redistribution and result in less residual stress. The straightening tolerances ranged from those specified by AASHTO to none. The principal concern of those states that flame straighten is the heating temperature. The manual recommends the use of temperature measuring crayons for flame straightening. Most states monitor repaired members on the same frequency as their regular inspection cycles. It is recommended that if there is any question regarding adequacy of a repair, more frequent monitoring should be established.

A repair of a damaged girder in Armstrong County, Pennsylvania, resulted in replacement of the web and bottom flange for 80 ft in a 123-ft span. Shoring was placed to remove load from the girder. The portion to be removed was cut out and the new girder section was welded in place. This procedure followed the procedures outlined in *NCHRP Report 222* (*3*, pp 33, 34) and is similar to details in Figure 59 contained herein

(Ch. Five). The decision to replace was based on the condition of a sharp kink in the web and some kink in the bottom flange. This method of repair should fully reestablish structural adequacy.

Damage to a 4-ft section of web and bottom flange of a W 36 × 245 beam in a 90-ft span occurred in Massachusetts. The repair work was accomplished by placing temporary shoring under the damaged section. A beam was then located on the curb above the damaged beam for support during the repair. Load transfer to the support beam was accomplished through threaded rods to plates located on top of the support beam and the underside of the top flange of the damaged beam. The deflection of support beam was specified to be sufficient to remove load from the damaged beam. The severely damaged section was cut out, the remaining damaged beam web and flange were flame straightened, and a new 4-ft section was welded into place. A new bottom cover plate was welded in position, and the repaired beam was slowly released from the support beam to complete the repair. The method for support is similar to details shown in Figure 23 (Ch. Five). Rather than supporting from the bottom flange as shown in Figure 23, the support of the damaged beam was from the underside of the top flange. Provided all welds and length of cover plate meet requirements, this repair will restore full structural adequacy.

The State of Kansas replaced three damaged vertical truss members on Bridge No. 166-50-25.24 in La Bette County. The repair was accomplished by placing slings, or temporary supports, at the panel points where the verticals required replacement. The method of temporary support was similar to details shown in Figure 42 (Ch. Five). The required length of the new member was required to be within ⅛ in. of original. Where partial length members were replaced, field cuts were specified to be made and dressed to within ⅛ in. New connections were made with high-strength bolts. Only one member was replaced at a time. By designing proper splice details, this repair will restore full structural adequacy.

One tie beam of a steel arch pedestrian bridge at N.E. 80th Street near Bellevue, Washington, was badly damaged and required partial replacement. Previously this same member had been damaged and was flame straightened. In order to replace the damaged section, a temporary jacking device was designed to take the place of the tie member during removal. The jacking device consisted of two 1⅜-in. threaded rods through steel blocks bearing on existing tie plates beyond the damaged area. The rods were about 38 ft long, while the damaged section of the tie girder was approximately 20 ft long. The replacement section was reconnected with high-strength bolts. This repair restored full structural adequacy.

The facia and first interior W 36 × 182 beams of a continuous bridge in Susquehanna County, Pennsylvania, were damaged. Because of the continuity condition, the repair procedure involved both flame straightening and partial replacement. A temporary beam was placed under the parapet and adjacent to the facia beam. Load was transferred to the temporary beam while the damaged beams were flame straightened to the splice point. When the damaged beams were straightened to the splice point, the sections of the damaged beams beyond the splice point to the free ends were removed and replaced with new sections. A detailed and explicit sequence of repairs was specified to ensure that proper load transfer occurred during all stages of repair and replacement. Calibrated jacks were specified, and anticipated loads were calculated. The final adjustment to ensure desired final load on the repaired girders was achieved by adjustment of the bearings supporting the repaired beams. When load transfer is achieved, this repair method will restore full strength.

A continuous girder bridge located in Bothell, Washington, north east of Seattle, was damaged by an overheight vehicle. The damaged beam was a W 33 × 118 with a span length of 45 ft. The facia beam was displaced 4 in. laterally approximately 9 ft from a bearing point. The web of the beam was indented a little over 1 in. at point of impact. The bottom flange of the first interior beam was displaced laterally about ¾ in. at the diaphragm. This is the only bridge damage found by this research where accurate damage displacements were measured and recorded. These measurements were made over the entire length of damage from a string line stretched taut over the span length of 45 ft. There were no tears or kinks in the damaged beam. The repair of this damage was accomplished by flame straightening. The straightening operations were completed over a 5-day period. The number of vee heats to straighten this damage was estimated to be 82. The actual number of heats applied was 74. The estimated number of heats was calculated by Holt's formula, which is described in the manual in Chapter Five, under "Predicting Number and Size of Vee Heats." The repair of this bridge by flame straightening met all the requirements contained in the manual.

New Hampshire has developed a fairly uniform system for repairing damaged girder bridges. The majority of their repairs is accomplished by a combination of flame straightening and strengthening. The damaged girder is jacked vertically the required distance to remove load. The adjacent girders are jacked approximately one-half that distance. The damaged beam is then straightened to original position by controlled heating. The jacking loads are required to be applied to the top flange of the damaged member. After the beam is straightened and other required repairs are made, a new cover plate is welded to the bottom flange. The new cover plate is extended to a near zero stress range location, or to approximately the same location as any existing cover plates. This method of repair will restore the beam to equal or greater than its original strength.

Rockwell Hardness Limitations

Stout et al. (*5*, p. 80) defines hardness as the resistance to indentation. There is no close relation between hardenability and hardness, despite the fact that the latter is commonly used to measure hardenability. Hardness depends primarily on the carbon content of a steel and secondarily on the presence of alloying elements. Hardenability is affected strongly by the alloying elements present and is dependent to a lesser extent on the carbon content. It is a familiar fact that the addition of carbon or alloying elements to steel generally makes the steel more difficult to weld. In determining whether a steel is hardenable, both hardness and microscopic examination are frequently employed. Hardness may be caused by rapid cooling of hardenable steels. Hardness is a useful indicator in determining the type of an unknown steel.

For many years it was commonly accepted that underbead cracking could be avoided in plain carbon steels, welded with other than low-hydrogen electrodes and without preheat, if the maximum hardness in the heat-affected region did not exceed 36 Rc (Stout et al., *5*). Similarly, welding experience indicated

that hardness below 22 Rc appeared to ensure sufficient ductility for satisfactory performance under service loads (Stout et al., *5*). When consideration is restricted to avoiding underbead cracking, the hardness composition concept has been helpful in differentiating between steels that are readily weldable and steels that require more critical appraisal from the standpoint of their need for preheat, postheat, or low hydrogen welding techniques. Heat-affected zone hardness alone does not necessarily provide a reliable index of crack sensitivity. The New York DOT has advised that they became very conscious of hardness from Dr. Warren E. Savage and their own experience. They have found that steels with Rockwell surface hardness values greater than C30 may have microstructures susceptible to hydrogen cracking. Their Steel Construction Manual (SCM) contains the following requirement for oxygen cutting of A-588 steel:

> The Contractor (Fabricator) shall take steps to insure that the flame cut edges of main material are not hardened by the cutting process. This may be achieved by preheating, postheating, or control of the burning process. Flame cut edges found to have a Rockwell hardness value of C30 or greater will be considered unacceptable. A portable Rockwell Hardness Tester will be employed by the inspector to determine conformance with these requirements. Unacceptable hard surfaces shall be removed by grinding or machining.

Hardness values in the New York SCM are specified to avoid hard heat-affected zones (HAZ) that can be avoided by controlling oxygen cutting and welding.

Although Rockwell hardness is not a true indicator of metal toughness, a change in Rockwell hardness is an indication of a phase change in the heat-affected zone due to welding and a consequent change in metal structure. One of the transformations may be the formation of some martensite with high carbon equivalent which is hard and has a deleterious effect on toughness. This transformation may be due to an excessive cooling rate. The New York State Department of Transportation is concerned that steels with Rockwell hardness greater than C27 in the heat-affected zone will have undesirable characteristics. Hardness tests are specified as a quality control measure. Rockwell tests are preferred over Brinell tests because of the smaller indentation caused by the Rockwell indentor. A portable center punch indentor is used for shop and field work.

The Effect of Vehicle Impact on Steel Properties

It is possible to take coupons from a damaged area and compare Charpy impact values with coupons taken from an undamaged section of the same material. The Michigan State Transportation Department has made this type of test for accidental vehicular damage. Their research Project 78-TI-453(*6*) compared Charpy impact values adjacent to an impact area fracture with values taken elsewhere in the beam. The beam had suffered prior damages and heat repairs. The Charpy V-notch tests adjacent to the fracture showed a drop from an average of 6.55 to 2.60 ft-lb at 20 F (20 F was used for tests since the accident occurred at about this temperature). The project concluded that the primary problem was that the impact resistance was so low in the first place, rather than a brittle condition being caused by the repair procedures. Dr. John Fisher of Lehigh University has stated that the entire Charpy impact curve must be drawn to obtain meaningful information.

Michigan State Research Project 75-TI-275(*7*) is of interest. This rolled beam constructed of A-7 steel suffered brittle fracture due to a vehicle severely impacting the girder. The Charpy impact tests at 40 F showed an average impact energy of 17 ft-lb in the top flange and 16 ft-lb in the bottom flange. These values are higher than the AASHTO toughness specification of 15 ft-lb at 40 F for a beam of this type made of A-36 steel. Specimens of this beam were tested at various temperatures and transition temperature curves were drawn. The bottom flange developed a low value of only 2 ft-lb at 0 F, which would predict a brittle behavior at this temperature with or without a high loading rate. The temperature of the beam at the time of the accident was reported as below 40 F and possibly below the freezing point. The conclusions drawn were: the fracture experienced by this beam was initiated by a severe and unusual impact loading. The 40 F properties of the beam cannot be deemed as inadequate. (Michigan has stated that 79 bridges with A-7 steel were tested and 15 were found to have 40 F Charpy impact tests of less than 15 ft-lb.) The observed fracture behavior demonstrates that brittle fractures can occur in so-called ductile materials. It should be remembered that toughness and ductility are not the same. Materials such as lead are ductile but not tough. Lowering the Charpy impact test temperatures indicated a rapid decrease in the corresponding toughness. It is agreed that impact loads can cause brittle fractures at low temperatures. However, significant changes in steel properties adjacent to brittle cracks have not been documented.

Members that are ductile and tough have a large area under the stress-strain curve as shown in Figure A-1 for A-36, A-242, A-440, and A-441 steels. Stout et al. (*5*) point out that ductility is lower and fracture transition temperatures are higher for steels that have been plastically strained and aged compared to identical steels that have not been plastically strained and aged. Strain aging can severely reduce ductility and toughness. However, strain aging at ambient temperature and low prestrain (5 percent) does not significantly degrade steel.

The American Institute of Steel Construction (AISC) (*8*) illustrates graphically that beyond yield point strain, the steel continues to deform in the direction of applied stress for a total displacement equal to about 15 times that produced elastically, with no significant increase or decrease in applied stress. After that, strain hardening commences and further deformation can

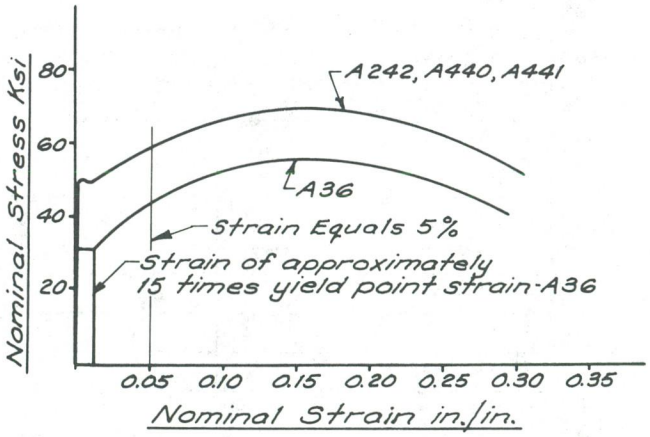

Figure A-1. Nominal stress strain curves.

take place only with some increase in applied stress. Note from Figure A-1 that a strain of 15 times the yield point is not a large percentage of the total strain curve for A-36 steel.

It is known that bridge elements have been successfully straightened with strains greater than 15 times the yield point strain. The extent of steel degradation, if any, is unknown. The studies of strain and its effects generally have considered only low strain rates, expressed in in./in./sec, as are experienced during the straightening operation. Behavior will be different when high strain rates such as may occur when damage is inflicted are applied. Strain rates and the magnitude of straining will vary throughout the damaged area. However, it is believed that a study of higher strain effects due to cold mechanical straightening may be useful in determining an upper strain limit. While strain rate may be important, the amount of strain, in./in., should have a greater effect on mechanical properties of impact damaged steel.

Pattee et al. (*9*) show an increase in transition temperature of 16 F for A-441 steel and 33 F for ABS-B steel due to cold straightening to strains of about 5 percent. The Charpy V-notch energy at room temperature was 96 ft-lb for A-441 steel and 138 ft-lb for ABS-B steel specimens sectioned from plates in direction of rolling. The Charpy values for specimens sectioned from plates transverse to direction of rolling was 28.5 ft-lb for A-441 steel and 89.5 ft-lb for ABS-B steel. The report does not contain data to prepare Charpy curves.

Table A-1 from Rothman et al. (*10*) indicates that the only significant degradation effects appear to be the Charpy results. For ABS-B steel the Charpy data were essentially unaffected by 5 percent compressive strain, but were shifted 40 deg to higher temperatures by the 5 percent tensile strain. For A-537 A steel, the Charpy curves were affected equally by compressive and tensile strains of 5 percent with each being shifted approximately 30 deg to higher temperatures. The 20 ft-lb temperatures indicate a possibility that the steels may have had adequate toughness after straightening. Charpy curves were not drawn.

Mishler et al. (*11*) states that ABS-B steels are as-rolled steels with a maximum yield strength of about 35,000 psi. The steels of this category include the common bridge steels, A-7 and A-36. A-537A steels are as-rolled, normalized, or stress-relieved steels with maximum yield strength of about 50,000 psi. The steels of this category that are used in bridge construction are A-242, A-441, A-572, and A-588.

Pattee et al. (*12*) state that the available data indicate that low strains (less than 5 percent) have little effect on the base metal properties.

Dr. John Fisher of Lehigh University has stated his opinion that most vehicle damages would not produce strains of more than 5 to 10 times yield point strain and that these strains would not cause significant degradation of ductile steels. It is also his opinion that bridges can normally be repaired at fatigue cracks and notches to indefinitely prolong life. Dr. Karl Frank of the University of Texas has stated that he believes bridge steels will not be significantly degraded from impact damage unless cracking or fractures occur.

Conclusions for maximum allowable strain due to accidental damage are given in "Guidelines for Assessment of Damage," under "Maximum Allowable Strains."

Welding A-514 and A-517 Steel

Nearly all knowledgeable persons interviewed considered weld repair of A-514 and A-517 steels as being potentially dangerous. The field welding difficulties are the same as welding lower strength steels. These difficulties include probable high restraint, high-shrinkage stresses, manual welding which may include starts and stops, all-position welding, and weather conditions which may increase the possibility of hydrogen embrittlement. All of these difficulties may result in increased fatigue susceptibility. The major differences are that A-541 and A-517 steels are high-strength quenched and tempered steels. It is

Table A-1. Cold-straightening at room temperature. (Rothman, R.L., and Monroe, R.E. (*10*))

Steel	Applied Strain	Charpy Results: Upper Shelf (ft.-lb.)	Charpy Results: Transition Temperature °F, (a)	Charpy Results: 20 ft.-lb.; Temperature	Tensile Strenth ksi	Yield Strength ksi	Elongation in 2 inches percent
ABS-B	as received	112	44	-10	64.0	38.5	36
	5% tensile	105	84	50	71.2	67.7	31.5
	5% compr.	117	43	8	--	--	--
	2% tensile	--	--	--	67.7	51.8	37.0
A-537A	as received	90	1	-48	87.4	55.1	33.5
	5% tensile	74	28	-7	92.1	84.2	27.0
	5% compr.	81	29	7	--	--	--
	2% tensile	--	--	--	89.2	67.0	31.5

(a) Transition temperature is the temperature at which absorbed energy was 50 percent of upper shelf energy.

difficult to weld these steels without injuring the quenched and tempered microstructure. The injuries may appear in either or both of two ways: (a) the presence of cracks in the base metal and in the weld metal as well as porosity and inclusions in the weld metal, and (b) changes may occur in the useful base metal properties such as strength, ductility, notch toughness and corrosion resistance. It is true that these steels can be satisfactorily welded in a controlled shop environment. Shop welding techniques are normally superior to field welding.

Literature pertaining to welding of these steels has been reviewed. This review was not conclusive. It is the opinion of the researchers, based on the best information available, that field weld repair of these steels should not be attempted. Repair welding these steels for durability is acceptable provided the welded areas are fully spliced with plates and high-strength bolts. Very little A-514 and A-517 steel has been used in highway overpasses; therefore, this recommendation is expected to have a very minor effect on the repair of accidentally damaged steel bridges.

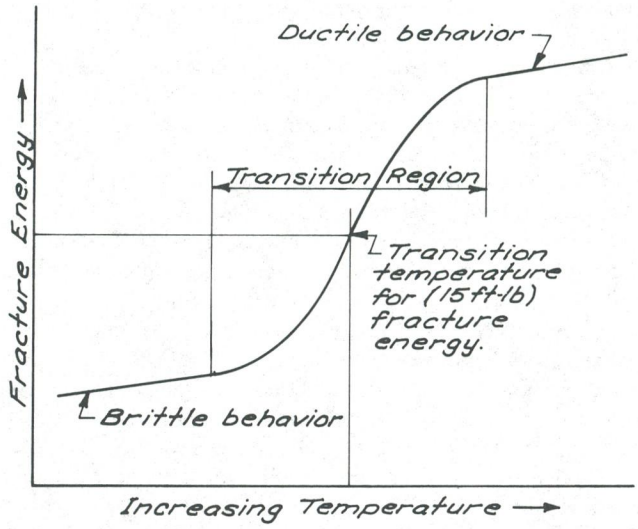

Figure A-2. Charpy impact curve.

Steel Toughness

Ductility tests of ductile steels conducted at room temperature produce extensive plastic flow and then ductile shear-mode failures in most instances. However, as test temperatures are lowered, all ferritic materials are susceptible to brittle fractures that are preceded by no readily detectable plastic flow and that propagate at high velocities. Bridge steels can fail in either a ductile or brittle manner, depending on temperature, loading rate, and constraint. As stated by Rolfe and Barsom (*31*), the presence of a notch or some other form of stress raiser makes structural materials susceptible to brittle fracture under certain conditions.

The mode of a fracture refers to the manner of crystallographic separation which can be either a shear along slip planes or cleavage between or through grains. Generally the appearance of a shear fracture is dull and fibrous, whereas a cleavage fracture is granular and crystalline. Behavior refers to the amount of plastic flow associated with the fracture in that ductile fractures are preceded and accompanied by extensive deformation, whereas brittle fractures are not. Most fractures are neither completely brittle nor completely ductile. Most bridge steels exhibit a gradual transition from ductile to brittle behavior with increases in the factors that cause brittleness: higher carbon, coarse grain size, lower temperature, high loading rates, and increases in section thickness.

The gradual transition in fracture behavior from ductile to brittle can cause a problem in the application of the transition-temperature approach to the design of structures. This is because it is extremely difficult to determine the transition temperature needed for satisfactory service for a given full-size structure using a small specimen. However, Stout et al. (*5*) dealt with this problem by use of the transition temperature in the Charpy V-notch test on samples taken from structures as large as merchant ships.

According to Carter (*13*), if the yield strengh is higher than the fracture strength, a material will fail due to brittle fracture. However, if the yield strength is lower than the fracture strength, the material will plastically deform prior to failure. Currently the most common method of measuring the relative notch toughness of steels is the Charpy V-notch impact test. Various criteria are used in establishing the impact-transition temperature. One of the most widely used is the temperature at which the test specimen breaks with a certain relatively low level of energy absorption, frequently 15 ft-lb force (see Fig. A-2). Another criterion commonly seen in the literature is the temperature at which the fracture contains 50 percent shear area. The entire curve must be studied prior to drawing conclusions regarding the effect of increased Charpy transition temperature on steel elements susceptible to brittle fracture. Lower shelf to upper shelf transition rates vary for different types of steel.

There are many older steel bridges that do not meet presently specified minimum Charpy impact toughness requirements. Michigan (*6*) is an example of a bridge girder that did not meet presently specified Charpy impact toughness requirements. However, older bridges have performed very well and in many instances carry higher live loads than originally designed for. It may be true that these bridges were designed in a conservative manner but it is believed that the live-load stress range is relatively high. Member and joint fasteners for these bridges were primarily rivets with minor use of bolts. There are stress concentrations in riveted bridges, and fatigue cracks have occurred in riveted members (Fisher, *14*), but the edge distances and stresses used have been very successful in preventing crack initiation and growth. Riveted construction normally uses multiple plates or shapes, and when one element cracks, the crack does not directly enter the other elements.

Welded bridges require very close attention to weld details and allowable stresses used at these details in order to prevent crack initiation and growth. Cracks may initiate at points of high stress concentration. One example is at the end of a fillet weld fastening a cover plate to a tension flange. Another example is the intersection of longitudinal and vertical sitffener fillet welds. Undetected cracks within a weld may also propagate due to live-load stresses. Cracks may propagate at low stress ranges (2 ksi to 2.5 ksi) with a high number of stress cycles.

Flame Straightening—Maximum Temperatures

Moberg (*15,* p. 21) states that the heat most often mentioned in connection with flame straightening is 1,200 F. For most steels, that temperature gives maximum thermal upsetting without any detrimental effects on the metallic structure of the steel. Holt (*16*) recommends a maximum temperature of 1,200 F for all steels in normalized or annealed condition, and the maximum temperature for quenched and tempered steels (ASTM A-514 and A-517) shall not exceed the tempering temperature. Pattee et al. (*12*) state that low-alloy steels with yield strengths ranging from about 45,000 to 75,000 psi used in the as-rolled or normalized condition can be heated to conventional flame straightening temperatures (~ 1,100 to 1,200 F) without significantly affecting their mechanical properties. Pattee et al. (*9*) note that the study results show that the widespread use of flame straightening of A-441 steel is an acceptable procedure and that flame straightening of A-441 is permissible at temperatures up to 1,400 F. Rothman et al. (*10*) note that the study results showed that normalized A-537A could be flame straightened at temperatures of 1,300 F with no loss in steel properties.

Review of the preceding references and other literature indicates that 1,200 F should be the maximum flame straightening temperature. Heating above this temperature may result in undesirable steel properties. Quenched and tempered steels such as A-514 and A-517 shall not be heated above 1,050 F, which is below the tempering temperature of 1,150 F.

Peening During Flame Straightening

Dr. Karl Frank of the University of Texas does not believe peening to be very advantageous as an aid in conjunction with flame straightening. The New York State Department of Transportation considers peening of little value; however, they do believe that peening will reduce residual stress. The Washington State Department of Transportation believes that peening is a very valuable aid in straightening bent members. They believe that it relieves residual stresses and hastens the straightening process. Dr. Richard E. Holt has stated that residual stress in flame-straightened members can be removed by peening, starting near the outside edge of the concave side and working toward the centerline. He has also stated that residual stress is a controversial subject, and did not give an opinion as to percentage of residual stress that could be removed by peening.

Mishler et al. (*11*) state that the effectiveness of the flame straightening operation can be enhanced by the use of light peening of the tension areas adjacent to the heated areas. Peening is done after the heat has been applied and cooling has begun. Tensile stresses will be created in the portion of the area on the concave side of the bent member (the unheated area between the heated wedge apex and the opposite beam edge) as the beam starts to straighten. These tensile stresses will act to resist the straightening action. Light peening of this area adds very localized compressive stresses that reduce the tensile stresses. By reducing these tensile stresses, there is less resistance to the straightening action and a greater amount of straightening will occur during each heating and cooling cycle. Peening should be done with the flat surface of a ball peen or similar hammer. The blows should be light enough that no marking of the steel occurs. The effects are further enhanced if the area being peened is backed up with a heavy sledge held against the surface opposite that being peened.

Harrison et al. (*17*) made tests which indicate that considerable plastic elongation can result from light transverse hammering on a tension member whose steady stress is well below its yield point. This reference notes that if the tension side of a bent member is lightly hammered during application of a steady transverse force, straightening can be effected under a steady force which alone is insufficient to produce yielding.

Peening of heated material should not be done when the temperature of the steel is in the blue brittle range. Steel is more brittle in this range than above it or below it. The blue brittle range of bridge steels occurs between approximately 300 F to 700 F. Peening at points away from the heated area, such as connections or connecting members, can be effective in flame straightening. An element causing restraint may be relieved of stress by peening, thereby hastening the flame straightening process.

Heat Input During Welding

Welds can easily crack during welding if insufficient preheat, interpass temperature, and inappropriate heat input are used during welding. An extreme example would be the deposition of an initial small weld bead along a groove joining two thick, restrained plates, assuming zero preheat. The heat absorption of the base metal and consequent rapid cooling of the weld and heat-affected zones would easily cause embrittlement that, combined with shrinkage stresses, could crack the weld or heat-affected zones. The use of preheat, maintenance of interpass temperature, and use of proper heat input during welding minimizes the likelihood of cracking. Restricting the minimum size of electrode to $\frac{5}{32}$ in. helps to ensure that welding heat input meets minimum standards. Back gouging of butt welds which removes the initial weld pass and a portion of the heat-affected zone is beneficial by removing defective or potentially defective weld and base metal. Back gouging before welding the second side of groove-welded joints is an effective means of ensuring weld soundness. Postheating slows the shrinkage rate and minimizes cracking by providing the temperature and time necessary for hydrogen diffusion.

Strengthening Steel Bridges with Post-Tensioning

Because of changes in design specifications and rating criteria, increase in truck traffic loadings, and the placement of additional deck surfacing, many bridges may require strengthening. Strengthening of deficient steel bridges through the installation of high-strength post-tensioning tendons may provide an effective and economical solution. Work has been performed and is continuing as reported by Sanders and Klaiber (*4*). The laboratory testing phase of this research verified that post-tensioning could be used. A field testing phase strengthened two existing bridges. The field testing program demonstrated the feasibility of post-tensioning existing steel bridges. The two existing bridges will be inspection monitored every 3 months over a period of 2 years. Both bridges will again be test loaded to determine if changes have occurred over that period of time.

Two post-tensioning techniques for temporary repairs of truss tension members are shown in Figures 41 and 42 (Ch. Five). Figure 41 shows details for a truss diagonal and Figure 42 shows details for a truss vertical. The Georgia DOT used temporary post-tensioned steel rods when required to replace 71 ft of the suspended section of the Eugene Talmidge Memorial Bridge in Savannah Harbor. Both bottom chords were severed when a freighter struck the suspended truss span. The repair work was accomplished in less than 3 months. Eighty-ft long steel rods were mounted and tensioned through plates welded to the bottom of the truss members. The New York DOT strengthened a fire-damaged through truss by post-tensioning in January 1982. This temporary repair was in place for one year. The Washington DOT temporarily strengthened the deteriorated bottom chord of a timber truss by installing post-tensioned cables in the plane of the bottom chord. Post-tensioning techniques can eliminate expensive falsework and shoring. Also, post-tensioning may be advantageous from the standpoint of work and space requirements. Post-tensioning should be considered for repair work as well as for permanent strengthening projects.

CONCLUSIONS AND SUGGESTED RESEARCH

Conclusions

The conclusions are based on review and evaluation of the information and data obtained during this project. In main, the authors concluded that enough reliable information and data had been evaluated to prepare a practical user's manual. The scope of this study did not include metallurgical testing. In particular, the following conclusions were made:

Although flame straightening repairs have been successfully used for over 40 years, many states do not use this less expensive method of repair. More use of this repiar method would reduce the time and cost of making bridge repairs. Flame straightening does not significantly degrade steel properties when proper procedures are followed. The flame straightening process can be analyzed by using engineering fundamentals.

There is no known report or manual that deals with the entire problem of accidental steel damage and the repair of damaged bridge members. The lack of such a manual may contribute to the present use of many inappropriate repairs. Methods for assessing damage and selection of repair methods vary widely. Organization appears to be important. Those transportation departments that place responsibility for inspection, assessment, and repair of damage in one division are generally more consistent in determining appropriate decisions. This conclusion may also apply to the repair of all bridges.

The possible degradation of steel due to vehicle damage has been largely ignored. Establishing damage curvature guidelines should result in safe repairs.

A steel member can be cold strengthened once without significant degradation of steel properties, provided the strain is limited to the values given in the manual of recommended practice.

Welding repairs can be successful; however, a strong emphasis must be placed on high quality welding, nondestructive testing, and rigorous inspection.

All information contained in the manual, including information pertaining to fatigue critical details, should be studied by bridge designers. A conclusion has been reached that bridge designers should be more aware of bridge maintenance problems. Better maintainability should be incorporated in bridge designs.

Combination of repairs such as flame straightening plus adding bolted splice material is effective. Adding welded or bolted splice material may be used to increase the bridge capacity to carry heavier live loads and improve the safety of repaired members. Fracture critical members (FCM) that have been straightened should be strengthened to provide for possible losses in toughness and ductility. Fracture safety is improved by reducing the stress.

Suggested Research

Research and successful application of heat curving, cambering, and straightening of bridge steels have proven the effectiveness of flame straightening. The AASHTO specifications include criteria for heat curving and cambering of rolled beams and welded girders. Damaged steel bridges have been successfully repaired by flame straightening for nearly 50 years. It is believed that further research pertaining to the effect of heat curving or straightening is not required to substantiate that this technique, properly applied, does not significantly degrade steel properties.

However, the effect of accidental damage on steel properties has not been thoroughly researched and tested. The maximum allowable strains for flame straightening recommended herein are based on slow loading rates. There is evidence that the guidelines are conservative; however, the evidence is nonconclusive. More research and/or testing of accidentally damaged steel would be useful. Steel properties at points of varying damage strains could be compared with properties at points of zero damage strain. Specification-required properties should be compared. Tests should include Charpy impact results, stress-strain curves including ultimate load stress and strain, reduction in area, and percentage of total elongation. Tests should be made to determine the effect of repeated damage. In determining steel properties of repetitively damaged and strengthened steel, the effect of damage and straightening will be established. Tests should include representative bridge steels (i.e., A-7, A-36, 50 ksi and A-514). Such tests on damaged steel could be accomplished by most state agencies with their present testing facilities. Light secondary members, such as sway braces in a truss, are members that suffer repetitive damage. These members are such that samples could be taken without affecting safe structure capacity. Also, they often sustain extensive strain from accidental damage. Portions of bridge members that require replacement could also be used for test purposes. This type of proposed testing should establish the strain limit for repair of damaged steel. If laboratory damage tests are conducted, light members could be used to facilitate testing purposes, since the objective of this research is to ascertain steel properties of steels subjected to rapid loading. Further testing could provide more conclusive data for determining the severity and number of damages that can be repaired to result in safe and durable rehabilitation.

APPENDIX B

REFERENCES

1. "Standard Specifications for Highway Bridges." *American Association of State Highway and Transportation Officials,* 12th Edition (1977) 496 pp.
2. Williams, D., "An Introduction to the Theory of Aircraft Structures." *The Method of Individual Displacements,* Edward Arnold, LTD (1960) pp. 95–97.
3. "Bridges on Secondary Highways and Local Roads." *NCHRP Report 222* (1980) 132 pp.
4. Sanders, W. W., and Klaiber, F. W., "Performance of Strengthened Highway Bridges." *Proc.,* W. H. Munse Symposium, ASCE (May 1983) pp. 174–192.
5. Stout, R. D., and Doty, W. D., "Weldability of Steels." *Welding Research Council* (1971) 430 pp.
6. Michigan State Dept. of Transportation, "Fractured Beam from SO2 of 25032, I-75 under M-56 West of Flint." *Research Project 78 TI-453* (July 1980).
7. Michigan State Dept. of Transportation, "Steel Evaluation of Vehicle Damaged Structure SO8 of 39022, 38th St. Over I-94 Near Kalamazoo." *Research Project 75 TI-275* (Nov. 1976).
8. American Institute of Steel Construction, "Plastic Design in Steel." New York, N.Y. (1959).
9. Pattee, H. E., Evans, R. M., and Monroe, R. E., "Effect of Flame and Mechanical Straightening on Material Properties of Weldments." *Ship Structure Committee Report SSC-207* (1970).
10. Rothman, R. L., and Monroe, R. E., "Effect of Temperature and Strain Upon Ship Steels." *Ship Structure Committee Report SSC-235* (1973).
11. Mishler, H. W., and Leis, B. N., "Evaluation of Repair Techniques for Damaged Steel Bridge Members." *NCHRP Project 12-17* (May 1981).
12. Pattee, H. E., Evans, R. M., and Monroe, R. E., "Flame Straightening and its Effect on Base Metal Properties." *Ship Structure Committee Report SSC-198* (Aug. 1969).
13. Carter, G. F., "Principles of Physical and Chemical Metallurgy." *American Society for Metals* (1979).
14. Fisher, J. W., "Inspecting Steel Bridges for Fatigue Damage." *Fritz Engineering Laboratory Report No. 386-15* (1981).
15. Moberg, K. L., "Damage Assessment and Contraction Straightening of Steel Structures." Masters Thesis in Civil Engineering, University of Washington (1979) 170 pp.
16. Holt, R. E., "Primary Concepts for Flame Bending." *Welding J.* (June 1971).
17. Harrison, H. L., and Mills, B. D., "Effects of Light Peening on the Yielding of Steel." *Welding J.* (May 1951) pp. 251–253.
18. Rothman, R. L., "Flame Straightening Quenched and Tempered Steels in Ship Construction." *Ship Structures Committee Report SSC-247* (1973).
19. Fisher, J. W., Hausammann, H., Sullivan, M. D., and Pense, A. W., "Detection and Repair of Fatigue Damage in Welded Highway Bridges." *NCHRP Report 206* (June 1979) 85 pp.
20. Holt, R. E., "Flame Straightening Basics." *Welding Eng.* (1965) pp. 49–52.
21. Goodier, J. N., "Thermal Stress." *ASME J. Appl. Mechanics* (Mar. 1937).
22. Brockenbrough, R. L., and Johnston, B. G., "Criteria for Heat Curving Steel Beams and Girders." *ASCE J. Structural Division* (Oct. 1970).
23. Brockenbrough, R. L., "Experimental Stresses and Strains from Heat Curving." *ASCE J. Structural Division* (July 1970).
24. Graham, R., "Investigation of Flame Straightening Methods for Steel Structures." *Boeing Co. Manufacturing Report MDR 2-32075* (Oct. 1975).
25. Holt, J. E., "Contraction as a Friend in Need." Typed and Duplicated in U.S.A. (Copyright 1938).
26. Holt, J. E., "Flame Straightening: A Friend in Need." *Welding Eng.* (Oct. 1955) pp. 44–46.
27. Harrison, H. L., "Straightening Structural Members in Place." *Welding J.* (May 1952).
28. New York Dept. of Transportation, *"New York Steel Construction Manual."* (Nov. 1981).
29. Stolldorf, D. W., "Fire Damaged Bridge Requires Major Repairs." *Public Works* (Dec. 1980).
30. Albrecht, P., Wattar, F., and Sahli, A., "Toward Fatigue-Proofing Cover Plate Ends." *Proc.* W. H. Munse Symposium Behavior of Metal Structures (May 17, 1983) pp. 24–44.
31. Rolfe, S. T., and Barsom, J. M. "Fracture and Fatigue Control in Structures." *Prentice-Hall, Inc.* (1977) 562 pp.

THE TRANSPORTATION RESEARCH BOARD is a unit of the National Research Council, which serves the National Academy of Sciences and the National Academy of Engineering. The Board's purpose is to stimulate research concerning the nature and performance of transportation systems, to disseminate information that the research produces, and to encourage the application of appropriate research findings. The Board's program is carried out by more than 270 committees, task forces, and panels composed of more than 3,300 administrators, engineers, social scientists, attorneys, educators, and others concerned with transportation; they serve without compensation. The program is supported by state transportation and highway departments, the modal administrations of the U.S. Department of Transportation, the Association of American Railroads, the National Highway Traffic Safety Administration, and other organizations and individuals interested in the development of transportation.

The National Research Council was established by the National Academy of Sciences in 1916 to associate the broad community of science and technology with the Academy's purposes of furthering knowledge and of advising the Federal Government. The Research Council has become the principal operating agency of both the National Academy of Sciences and the National Academy of Engineering in the conduct of their services to the government, the public, and the scientific and engineering communities. It is administered jointly by both Academies and the Institute of Medicine.

The National Academy of Sciences was established in 1863 by Act of Congress as a private, nonprofit, self-governing membership corporation for the furtherance of science and technology, required to advise the Federal Government upon request within its fields of competence. Under its corporate charter the Academy established the National Research Council in 1916, the National Academy of Engineering in 1964, and the Institute of Medicine in 1970.

TRANSPORTATION RESEARCH BOARD
National Research Council
2101 Constitution Avenue, N.W.
Washington, D.C. 20418

ADDRESS CORRECTION REQUESTED

NON-PROFIT ORG.
U.S. POSTAGE
PAID
WASHINGTON, D.C.
PERMIT NO. 42970

RECEIVED
SEP 1 1984
MAT. LAB.

000015M001
JAMES W HILL
RESEARCH SUPERVISOR

IDAHO TRANS DEPT DIV OF HWYS
P O BOX 7129 3311 W STATE ST
BOISE ID 83707