NATIONAL COOPERATIVE HIGHWAY RESEARCH PROGRAM
REPORT **54**

LOCATION, SELECTION, AND MAINTENANCE OF HIGHWAY GUARDRAILS AND MEDIAN BARRIERS

HIGHWAY RESEARCH BOARD
NATIONAL RESEARCH COUNCIL
NATIONAL ACADEMY OF SCIENCES—NATIONAL ACADEMY OF ENGINEERING

NATIONAL COOPERATIVE HIGHWAY RESEARCH PROGRAM
REPORT 54

LOCATION, SELECTION, AND MAINTENANCE OF HIGHWAY GUARDRAILS AND MEDIAN BARRIERS

J. D. MICHIE AND L. R. CALCOTE
SOUTHWEST RESEARCH INSTITUTE
SAN ANTONIO, TEXAS

RESEARCH SPONSORED BY THE AMERICAN ASSOCIATION
OF STATE HIGHWAY OFFICIALS IN COOPERATION
WITH THE BUREAU OF PUBLIC ROADS

SUBJECT CLASSIFICATION
HIGHWAY DESIGN
MAINTENANCE GENERAL
HIGHWAY SAFETY
TRAFFIC CONTROL AND OPERATIONS

HIGHWAY RESEARCH BOARD
DIVISION OF ENGINEERING NATIONAL RESEARCH COUNCIL
NATIONAL ACADEMY OF SCIENCES—NATIONAL ACADEMY OF ENGINEERING 1968

NATIONAL COOPERATIVE HIGHWAY RESEARCH PROGRAM

Systematic, well-designed research provides the most effective approach to the solution of many problems facing highway administrators and engineers. Often, highway problems are of local interest and can best be studied by highway departments individually or in cooperation with their state universities and others. However, the accelerating growth of highway transportation develops increasingly complex problems of wide interest to highway authorities. These problems are best studied through a coordinated program of cooperative research.

In recognition of these needs, the highway administrators of the American Association of State Highway Officials initiated in 1962 an objective national highway research program employing modern scientific techniques. This program is supported on a continuing basis by funds from participating member states of the Association and it receives the full cooperation and support of the Bureau of Public Roads, United States Department of Transportation.

The Highway Research Board of the National Academy of Sciences-National Research Council was requested by the Association to administer the research program because of the Board's recognized objectivity and understanding of modern research practices. The Board is uniquely suited for this purpose as: it maintains an extensive committee structure from which authorities on any highway transportation subject may be drawn; it possesses avenues of communications and cooperation with federal, state, and local governmental agencies, universities, and industry; its relationship to its parent organization, the National Academy of Sciences, a private, nonprofit institution, is an insurance of objectivity; it maintains a full-time research correlation staff of specialists in highway transportation matters to bring the findings of research directly to those who are in a position to use them.

The program is developed on the basis of research needs identified by chief administrators of the highway departments and by committees of AASHO. Each year, specific areas of research needs to be included in the program are proposed to the Academy and the Board by the American Association of State Highway Officials. Research projects to fulfill these needs are defined by the Board, and qualified research agencies are selected from those that have submitted proposals. Administration and surveillance of research contracts are responsibilities of the Academy and its Highway Research Board.

The needs for highway research are many, and the National Cooperative Highway Research Program can make significant contributions to the solution of highway transportation problems of mutual concern to many responsible groups. The program, however, is intended to complement rather than to substitute for or duplicate other highway research programs.

This report is one of a series of reports issued from a continuing research program conducted under a three-way agreement entered into in June 1962 by and among the National Academy of Sciences-National Research Council, the American Association of State Highway Officials, and the U. S. Bureau of Public Roads. Individual fiscal agreements are executed annually by the Academy-Research Council, the Bureau of Public Roads, and participating state highway departments, members of the American Association of State Highway Officials.

This report was prepared by the contracting research agency. It has been reviewed by the appropriate Advisory Panel for clarity, documentation, and fulfillment of the contract. It has been accepted by the Highway Research Board and published in the interest of an effectual dissemination of findings and their application in the formulation of policies, procedures, and practices in the subject problem area.

NCHRP Project 15-1(2) FY '66
NAS-NRC Publication 1588
Library of Congress Catalog Card Number: 68-61722

FOREWORD

By Staff

Highway Research Board

This report is recommended to highway design engineers, maintenance engineers, and others concerned with highway safety. It contains a compilation of recommended practices for locating, designing, and maintaining guardrails and median barriers, as selected from a comprehensive literature review, a state-of-the-art survey, and the advice of a selected group of acknowledged experts. It is believed that this report will contribute to the effort toward producing safer highways.

There is a pressing need on the part of highway design engineers for a choice of effective guardrail and median barrier installations. Although the problem is one currently receiving extensive attention, it is recognized that considerable time will elapse before all work to identify or develop effective systems will be completed. Several sources previously generated much usable information that needed to be consolidated so as to provide an up-to-date, concise instructional manual that can provide *immediate* "how-to-do-it" guidance for the highway design engineer with respect to the various features of the commonly used, tried and proven systems now in existence that should be recognized as interim standards until research has satisfied the ultimate needs in this area.

This report presents the results of synthesizing a great deal of information concerning guardrails and median barriers collected as a part of NCHRP Project 15-1(2), "Guardrail Performance and Design," and provides recommended standards for nationwide consistency of practice by highway design engineers as related to warrants, design, and maintenance.

The agency worked jointly with a special NCHRP advisory group—consisting of John L. Beaton, California Division of Highways; Malcolm D. Graham, New York Department of Transportation; James D. Lacy, BPR; and Paul C. Skeels, General Motors Proving Ground—which exercised its responsibility to advise and counsel as to the contents of this report. Although the entire report content was originated by the agency, each recommendation has the consensus endorsement of the advisory group. Where recommendations are founded on less than clear-cut evidence, the judgment of the advisory group prevailed. It should be recognized that where no consensus of the advisory group was evident, no recommendation is presented.

Inasmuch as this report is intended as a design aid, references and supporting documentation have generally not been cited in order to preserve a clear, straightforward presentation. It should be noted also that the included standard designs certainly will be refined and upgraded in the future and the designer is obligated to periodically obtain the latest revisions.

The method of presentation is mainly graphic, with several drawings and tables. Example problems are included in the appendixes to demonstrate the warranting procedure.

This report covers the first phase of a 30-month research effort under NCHRP Project 15-1(2). Continuing work includes mathematical modeling, physical analog studies, and full-scale crash tests for various guardrail and median barrier systems, including end treatments and transitional zones. The next report is scheduled for publication in early 1970.

CONTENTS

1 SUMMARY

1 CHAPTER ONE Introduction

2 CHAPTER TWO Warrants

Design Purpose
General Approach
Determination of Need

6 CHAPTER THREE Designs and Selection Procedures

Characteristics of Recommended Systems
Selection Criteria
Design Procedure for a New Installation

11 CHAPTER FOUR Maintenance and Upgrading of Existing Installations

11 APPENDIX A Recommended Standards

45 APPENDIX B Installation Layout Details

55 APPENDIX C Example Warrant Problems

59 APPENDIX D Guardrail Installation Priority Sequence

RECOMMENDED STANDARDS

13	Standard G1.	Cable Guardrail
15	Sheet 1.	Transition Details; G1, G2, G3
17	Standard G2.	W-Beam Guardrail
19	Standard G3.	Box Beam Guardrail
21	Sheet 2.	Bridge Approach Layout, Box Beam
23	Sheet 3.	Details for Appurtenances, Box Beam
25	Sheet 4.	Connection Details, Box Beam
27	Standard G4.	Blocked-Out W-Beam Guardrail
29	Sheet 5.	End-Anchorage Details, Blocked-Out W-Beam
31	Sheet 6.	Flare Details, Blocked-Out W-Beam
33	Sheet 7.	Flare Details, Blocked-Out W-Beam
35	Sheet 8.	Connection Details, W-Beam Guardrail
37	Standard MB1	Cable Median Barrier
39	Standard MB2	W-Beam Median Barrier
41	Standard MB3	Box Beam Median Barrier
43	Standard MB4	Block-Out W-Beam Median Barrier
44	Standard MB5	Concrete Median Barrier
44	Standard MB6	Concrete Median Barrier

FIGURES

3 Figure 1. Guardrail requirements for embankment geometry.
3 Figure 2. Distribution of off-the-road incidents, General Motors Proving Ground study.
4 Figure 3. Bridge approach warrants.
5 Figure 4. Recommended ditch section.
5 Figure 5. Median barrier requirements.
45 Figure B-1. Elimination of shoulder guardrail by partial flattening of fill slope.
46 Figure B-2. Uniform shoulder treatment and uniform clearance to roadside elements.
47 Figure B-3. Guardrail terminal treatment for roadside fill condition.
47 Figure B-4. Guardrail terminal treatment for roadside fill-to-cut condition.
48 Figure B-5. Example of concrete median barrier treatment at underpass piers.
49 Figure B-6. Examples of poor practice.
50 Figure B-7. Examples of concrete guardrail applications.
51 Figure B-8. Barriers for stepped medians.
52 Figure B-9. Median barrier vehicle trajectory considerations.
53 Figure B-10. Vehicle trajectory analysis procedure.
54 Figure B-11. Vehicle trajectory plots for stepped median.
56 Figure C-1. Example roadway for determining warrants.
57 Figure C-2. Suggested format for summarizing results of warranting procedure.
58 Figure C-3. Example divided highway for determining warrants.
61 Figure D-1. Basic need index curves.
62 Figure D-2. Example roadway for determining installation priorities.

TABLES

5 Table 1. Warrants for Guardrail Placement at Roadside Obstacles and Hazards
7 Table 2. Summary of Guardrail Characteristics
8 Table 3. Summary of Median Barrier Characteristics
10 Table 4. Maintenance and Upgrading Recommendations
60 Table D-1. Accident Frequency Potential Factors
63 Table D-2. Guardrail Installation Sequence Summary

ACKNOWLEDGMENTS

To a large extent, this report reflects the in-depth guardrail and median barrier experience of the following special NCHRP advisory group consisting of J. L. Beaton, California Division of Highways; M. D. Graham, New York Dept. of Public Works; J. D. Lacy, U. S. Bureau of Public Roads; and P. C. Skeels, General Motors Proving Grounds. Each gave unstintingly of his time and effort to provide information and recommendations to create a document of immediate value to those in the highway community confronted with the responsibility of designing guardrails and median barrier installations.

For the Southwest Research Institute, L. R. Calcote and J. D. Michie, Senior Research Engineers, served as co-principal investigators. Mr. Michie also served as coordinator of manuscript preparation and technical editing. Others of the Institute staff who assisted in the document preparation were M. E. Bronstad, L. R. Calcote, and J. E. Minor, who prepared and revised trial manuscripts for various portions of the report, and R. C. DeHart and L. U. Rastrelli, who made administrative and technical contributions.

LOCATION, SELECTION, AND MAINTENANCE OF HIGHWAY GUARDRAILS AND MEDIAN BARRIERS

SUMMARY Judicious application of this current state-of-the-art information on guardrails and median barriers should result in safer highways. The report is directed primarily to the highway designer for use as a guide and to maintenance groups as an aid in upgrading existing installations. Because it is recognized that guardrails and median barriers are hazards in themselves, emphasis is placed on reducing the number of such installations to only those that can be firmly justified.

No attempt is made to handle each of the infinite variety of roadside conditions. However, the more common highway site conditions are treated in detail. With this background and with sound engineering judgment, these treatments can be extended to apply to the majority of roadside conditions.

Design procedure involves two steps—(1) determination of the need, and (2) selection of the appropriate system. Specific warrants for an installation are determined from the roadway properties (such as shoulder embankment geometry) and the location and type of roadside obstacles. Guardrail and median barrier designs evaluated by full-scale crash tests and satisfactory service performance are presented, together with a selection procedure.

CHAPTER ONE

INTRODUCTION

Within the past 15 years, considerable research has been conducted on guardrail technology. Full-scale, remotely controlled automobiles traveling at 60 mph or more have been directed into various guardrail systems, with the impact events recorded by high-speed photography. "Ran-off-the-road" and "across-the-median" accident statistics have been compiled and related to traffic volume and to highway geometry. Significant results which can be put to practical use have evolved from these preliminary efforts. Accordingly, the purpose of this document is to present to highway designers concise state-of-the-art information for (1) establishing need locations, (2) selecting effective system designs, and (3) maintaining and upgrading existing systems. Use of the document as a design guide obviously should be supplemented with sound engineering judgment.

Guardrails and median barriers are devices which redirect an errant vehicle from a dangerous path. Guardrails are used on shoulder embankments with steep slopes and at roadside hazards and obstacles. Median barriers are utilized on divided highways with narrow medians.

The technical content of the report is organized with respect to major aspects of guardrail technology. Chapter Two discusses warrants (or the needs) for guardrails and median barriers at particular highway locations. Guardrail and median barrier systems designs which have been carefully screened and procedures for selecting these systems are presented in Chapter Three. Aspects relating to maintenance and upgrading of existing guardrail systems are discussed in Chapter Four. Recommended designs and details are presented in Appendix A, including guardrail designs for bridge approaches up to but not including bridge rails. Installation layout details are presented in Appendix B. Example warrant problems are solved in Appendix C. A technique for establishing guardrail installation priority is presented in Appendix D.

CHAPTER TWO

WARRANTS

DESIGN PURPOSE

The purpose of guardrails and median barriers is to make highways safer by reducing accident severity. Properly designed installations accomplish this task by:

1. Preventing errant vehicle penetration. Median barriers prevent vehicles from crossing the median and causing head-on collisions. Guardrails reduce accident severity by excluding vehicles from dangerous areas.
2. Redirecting errant vehicles to a direction parallel to traffic flow, minimizing danger to following and adjacent traffic.
3. Minimizing hazard to vehicle occupants during impact.

Desirable guardrail and median barrier performance characteristics are that they:

1. Minimize vehicle damage so the auto can be maneuvered after impact.
2. Be resistive to impact damage.
3. Be economical in construction, installation, and maintenance.
4. Have a pleasing and functional appearance.

GENERAL APPROACH

Even properly designed guardrail and median barrier installations are formidable roadside hazards and provide errant vehicles with only a relative degree of protection. Although guardrail and median barrier installations should decrease accident severity, frequency of accident occurrence may increase with the added installations. This is because the guardrail/barrier system is usually a larger target and is located closer to the roadway than the roadside hazard itself. For this reason, guardrail and median barrier installations should be kept to a minimum, and highway designers should consider such installations only where they are clearly justified. Where guardrail and median barrier requirements are indicated, the designer should examine the roadway to determine the feasibility of adjusting site features so that guardrails will not be required (e.g., flattening an embankment slope or removing a tree). For borderline warranting cases, the action guideline is: *When in doubt, omit the guardrail or median barrier.*

Specific guardrail and median barrier warrants establish the *point of need* of a roadside obstacle and the *length of need* in extended hazards, such as steep embankments and narrow medians. Geometric layouts, including appropriate transition and minimum lengths of barrier, are presented in Appendixes A and B.

Warrants are based on physical characteristics of the roadway and are applicable to highways in general. For highway locations where accident fatality rate is unusually large, accident records override the normal warranting procedure in determining guardrail and median barrier needs.

DETERMINATION OF NEED

Guardrails

Three warranting features are considered in establishing guardrail placement: (a) embankment geometry, (b) roadside obstacles, and (c) nontraversable roadside hazards (e.g., dropoff) in close proximity to the roadway. Guardrail installation can be warranted by any one or all three of these shoulder features.

EMBANKMENT GEOMETRY

Height and slope of roadway embankments are basic factors in determining shoulder guardrail need. For low, flat embankments, out-of-control vehicles can "ride out" a slope with less hazard than that associated with striking a guardrail. For high, steep embankments, the hazard of being redirected by a guardrail is less than that where the vehicle is permitted access to the slope. A dividing line between these extremes is presented in Figure 1, which is the plot of an equal severity curve developed from accident studies involving beam-type guardrail in California. This curve is independent of accident frequency, vehicle speed, or embankment slope material.

Determination of warrants for embankments is a straightforward procedure. If an intersection point falls below the equal severity curve of Figure 1, guardrail is neither warranted nor desired for embankments with traversable (i.e., containing no large obstacles, such as trees or large sign posts) slopes. Obstacles on embankment slopes and hazards at the toe of the slope are discussed in the following sections. If the intersection point falls above the equal severity curve, use of the guardrail is warranted. However, before the guardrail is specified the roadway design must be examined to determine the feasibility of removing the warranting feature. (North Carolina has developed a computer program to conduct trade-off studies in cost of flattening embankment slopes versus that of guardrail placement.)

ROADSIDE OBSTACLES

Nearly one-third of all highway fatalities occur when vehicles inadvertently leave the roadway and strike fixed objects. By removing these obstacles and thus providing traversable roadsides, drivers of the errant vehicles would have the opportunity to regain control of their cars. Figure 2 shows a plot of 211 cases in which cars at the General Motors Proving Ground left the pavement. Generally, the roadside is relatively flat (10:1 embankment slopes) and

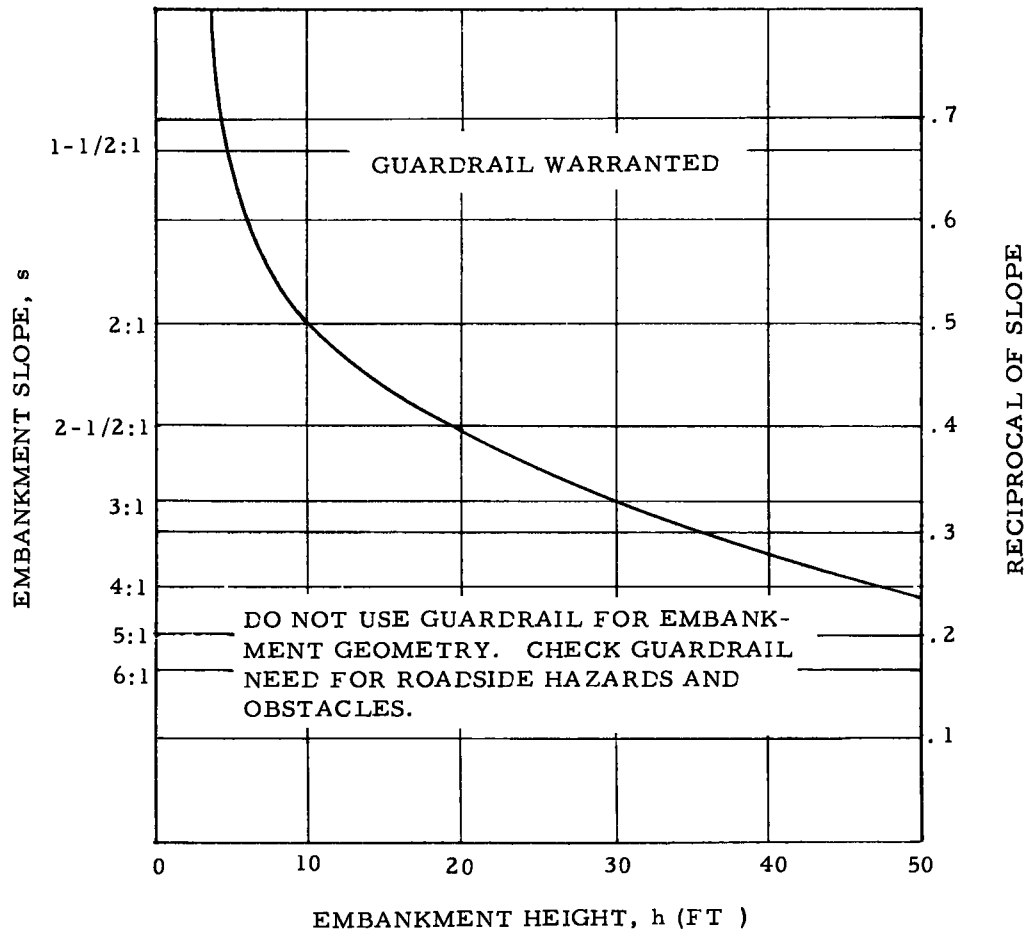

Figure 1. Guardrail requirements for embankment geometry.

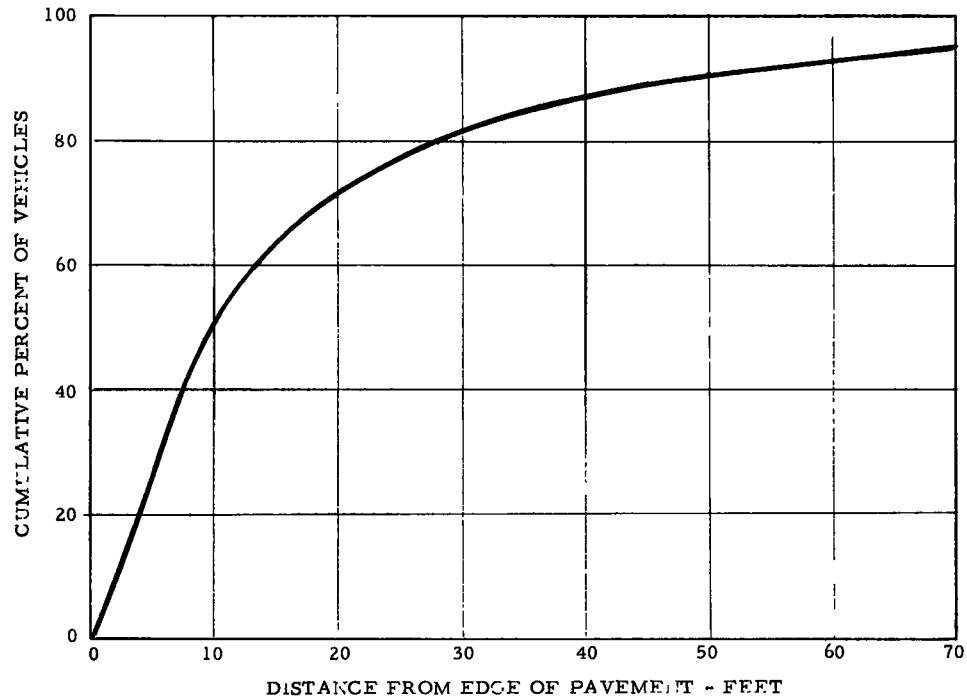

Figure 2. Distribution of off-the-road incidents, General Motors Proving Ground study.

clear of obstacles in the 100-ft zone adjacent to the pavement. Eighty percent of the errant vehicles did not travel more than 29 ft from the edge of the pavement.

For warranting purpose, a 30-ft zone adjacent to the traveled way is recommended as the minimum for being clear of roadside obstacles; a zone of more than 30-ft width is desirable. If the 30-ft zone cannot be cleared of roadside obstacles, due to practical or economic reasons, guardrail may be warranted for the roadside areas.

Two major obstacle groups are treated, as follows:

1. Bridge approaches.
2. Other roadside obstacles, such as sign supports, poles and posts, bridge piers and abutments at underpasses, retaining walls and culvert headwalls, and trees.

Specific determination of guardrail need for bridge approaches is illustrated in Figure 3. Width of bridge and direction of traffic are factors which affect guardrail warrants. Information concerning length, type, and geometric layout of guardrails is presented in Chapter Three and Appendixes A and B. The warranting criteria for other roadside obstacles are given in Table 1.

NONTRAVERSABLE ROADSIDE HAZARDS

Roadside hazards, as distinguished from roadside obstacles (preceding section), are located along a roadway for a considerable distance. Examples of hazards are (1) rough rock cuts, (2) large boulders, (3) permanent bodies of water with depth greater than 2 ft, (4) dropoffs having a slope greater than 1:1 and depth greater than 2 ft, and (5) lines of large trees. These features can greatly intensify the severity of "ran-off-the-road" accidents. Because of the length of the hazard along the roadway, the probability of errant vehicles striking a nontraversable hazard is greater than that of a vehicle hitting a roadside obstacle. For this reason, guardrails may be needed at hazards located more than 30 ft from the traveled way to provide roadsides with a consistent degree of safety.

Ditches near roadways can be a severe hazard if not properly negotiated by errant vehicles. Although shoulder guardrails may be warranted on a relative severity basis, it is presumed that the sectional profile of a ditch can be altered to a less hazardous or even to a safe profile at less cost. For this reason, ditches near a roadway will not alone justify the use of a guardrail, yet the ditch is recognized as a highway hazard and should be corrected by other means. A recommendation is shown in Figure 4.

Median Barriers

Warrants for median barriers are determined by median width and traffic volume. With highway median width (pavement edge to pavement edge) and the average daily traffic volume, the median barrier need is demonstrated in Figure 5. It is suggested that this average daily traffic volume be based on a 2-year projection. Median barriers are not warranted if median width exceeds 40 ft, except on the basis of adverse accident experience.

For all divided highways, regardless of median width and traffic volume, the median roadside must be examined for needs of embankment, nontraversable hazard, and obstacle guardrail. Procedures for this examination are those presented in the previous discussion.

Traffic Direction	W* (Ft.)	Guardrail Required At
North and South	60 or less	A, B, C, D
North and South	Greater Than 60	A, D
South Only	All Widths	A, B
North Only	All Widths	C, D

Note: See Appendix A for geometry and structural considerations of guardrail placement.

*W denotes width between curbs

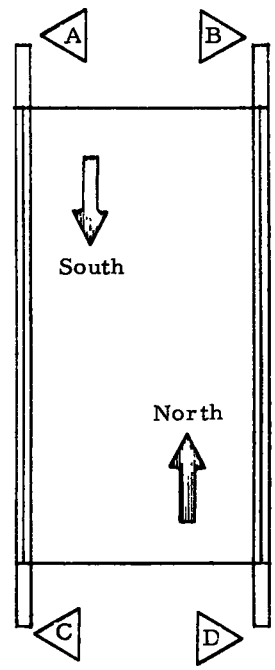

Figure 3. Bridge approach warrants.

TABLE 1

WARRANTS FOR GUARDRAIL PLACEMENT AT ROADSIDE OBSTACLES AND HAZARDS

ROADSIDE OBSTACLES AND HAZARDS WITHIN 30 FT OF TRAVELED WAY	GUARDRAIL REQUIRED	
	YES [a]	NO
1. Sign supports: [b]		
(a) Posts of breakaway design		X
(b) Wood poles or posts with area greater than 50 sq. in.	X[c]	
(c) Sign bridge supports	X	
(d) Metal shapes with depth greater than 3½ in.	X	
(e) Concrete base extending 6 in. or more above ground	X	
2. Metal lightpoles [d]		X
3. Bridge piers and abutments at underpasses	X	
4. Retaining walls and culvert headwalls	X	
5. Trees with diameter greater than 6 in.	X	
6. Wood poles or posts with area greater than 50 sq in.	X[c]	
7. Nontraversable hazards (see text)	X	

[a] Guardrail recommended only if obstacles cannot be removed from 30-ft zone.

[b] Breakaway design should be used exclusively, regardless of distance from traveled way.

[c] The cross-sectional area of large wood members can be reduced to 50 sq in. or less by boring holes or notching at about 6 in. above grade. If this is not feasible, guardrail is recommended.

[d] Use of breakaway bases for metal lightpole is good practice; however, guardrail should *not* be placed at existing metal lightpoles of nonbreakaway design.

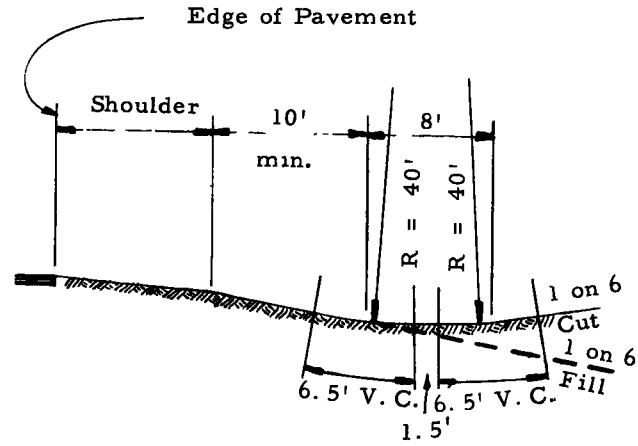

Figure 4. Recommended ditch section.

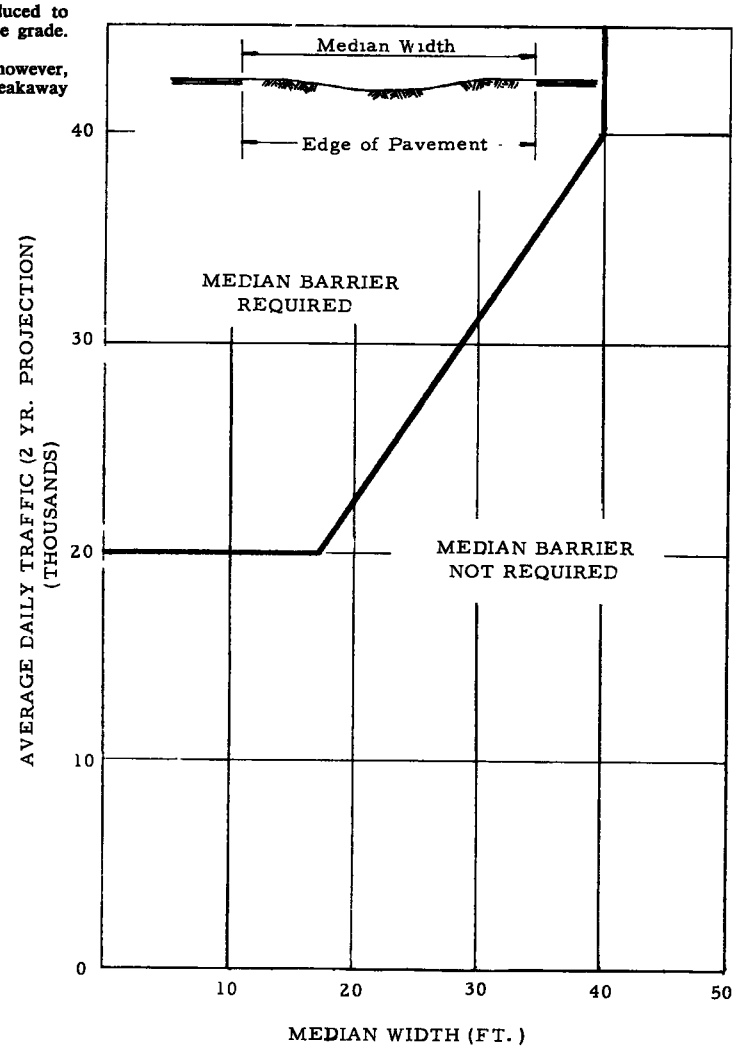

Figure 5. Median barrier requirements.

CHAPTER THREE

DESIGNS AND SELECTION PROCEDURES

Full-scale testing during the past 15 years has demonstrated that certain guardrail and median barrier designs are effective in preventing vehicle penetration and in redirecting errant vehicles safely. It was discovered that small variations in design or in construction details can have adverse effects on performance of an otherwise sound and adequate guardrail system. Several guardrail and median barrier designs evaluated in full-scale crash tests and by satisfactory service performance are recommended for general use. There are many other guardrail systems, but adequate performance or test data are not available to demonstrate their effectiveness. The characteristics of the recommended guardrail and median barrier designs, selection criteria, and the design procedures of this chapter will aid the highway designer in choosing the best applicable system.

CHARACTERISTICS OF RECOMMENDED SYSTEMS

Summaries of basic characteristics of recommended guardrail and median barrier systems are presented in Tables 2 and 3, respectively. Deflection, an important system characteristic, is the maximum lateral deflection that a system experiences during impact and redirection of a test vehicle (4,000- to 4,200-lb vehicle traveling at 60 to 65 mph and striking the system at a 25° impact angle). Other characteristics are (1) post type and post spacing, (2) beam type and mounting detail, and (3) footing type. Designs for these systems are presented in Appendix A, and general layout details in Appendix B.

SELECTION CRITERIA

An appropriate guardrail or median barrier system is selected by a straightforward procedure. The factors considered are relatively few in number. Principally these factors are (1) the unobstructed space available for system lateral deflection, (2) the roadway cross section, and (3) the installation and maintenance costs.

Deflection

The major factor in selecting a barrier system is matching dynamic lateral deflection characteristics of a system to the space available at the highway site. Because this lateral deflection varies with vehicular dynamics, a standard test (4,000- to 4,200-lb vehicle, 60 to 65 mph, and 25° impact angle) was used in determining deflection (Tables 2 and 3). For the recommended systems to perform in a similar manner in actual service, minimum unobstructed distances behind guardrails and median barriers must be equal to or greater than this deflection. For example, if the roadside hazard considered is 3 ft behind the proposed guardrail line, the guardrail system should be selected from those of Table 2 which indicate deflection of less than 3 ft. Similarly, if a barrier is to be placed in the center of a 10-ft median, the median barrier system should be selected from those of Table 3 which indicate a deflection of less than 5 ft (one half the median width).

Roadway Cross Section

Roadway cross section significantly affects guardrail and median barrier performance. Curbs, dikes, sloped shoulders, and stepped medians can cause errant vehicles to vault a barrier or to strike it so that the vehicle overturns. Optimum barrier system performance is provided by a level surface in front of the barrier. If curbs and dikes must be in front, they should be of the low, mountable type; preferably, curbs and dikes should be behind the barriers.

Stepped * median sections affect selection of median barriers. Cable and box beam systems (Table 3) are limited to flat medians or stepped sections with slopes flatter than 3:1 or steps less than 6 in. high. It is always necessary that cable or rail heights (or the lower slope position of the rigid concrete barrier) be adjusted according to the procedures in Appendix B so that proper contact is made with the vehicle.

Installation and Maintenance Costs

Although cost of installation generally increases as system rigidity † increases, cost of repair and maintenance generally increases as system rigidity decreases. Because of wide variation in both installation and maintenance costs between different localities, representative unit prices cannot be established. Therefore, if two or more guardrail systems satisfy lateral deflection requirements, final system selection must be made on the basis of local (1) preference, (2) material availability and costs, (3) installation costs, and (4) maintenance and repair costs.

DESIGN PROCEDURE FOR A NEW INSTALLATION

For any new installation, whether of guardrail or median barrier, the recommended design procedure is as follows:

1. Establish "point-of-need" or "length-of-need" by the warranting procedures of Chapter Two.
2. Based on the unobstructed space available for system deflection, select a standard type from Table 2 or Table 3.
3. From Appendix A determine the design particulars for the system selected. Note that all installations should be extended a reasonable distance both upstream and downstream beyond the warranted area to prevent vehicle access behind the protective system. Furthermore, flares,

* The median between roadways of different elevations is referred to as a "stepped" median (see Appendix B).

† A concrete barrier is the most rigid, a cable system the most flexible, of the guardrail and median barrier systems.

TABLE 2

SUMMARY OF GUARDRAIL CHARACTERISTICS

STANDARD TYPE	G1 CABLE	G2 "W" BEAM	G3 BOX BEAM		G4 BLOCKED-OUT "W" BEAM
	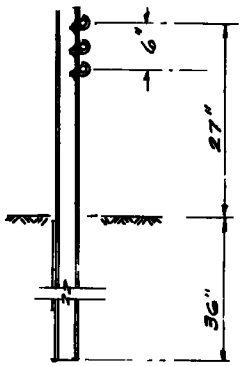	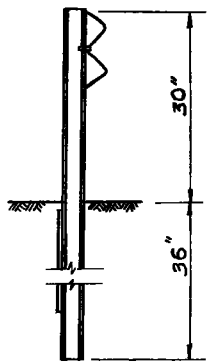	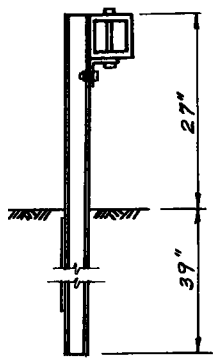		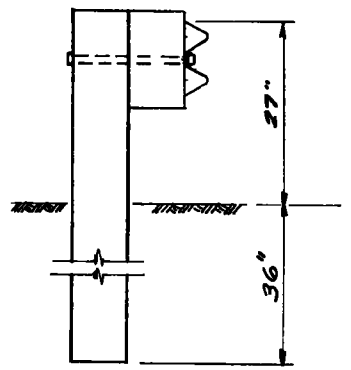
DEFLECTION	12 ft	8 ft	4 ft	2 ft	2 ft
POST SPACING	16'-0"	12'-6" Nominal	6'-0"	4'-0"	6'-3"
POST	3" I 5.7	3" I 5.7	3" I 5.7		8" x 8" Douglas Fir
BEAM	Three 3/4" Dia Steel Cables	Steel "W" Section	6" x 6" x 0.180" Steel Tube		Steel "W" Section
OFFSET BRACKETS	—	—	5" x 3-1/2" x 1/4" Steel Angle 4-1/2" Lg		8" x 8" x 1'-2" Douglas Fir Block
MOUNTINGS	5/16" Dia Steel Hook Bolts	5/16" Dia Steel Bolt	3/8" Dia Steel Bolt (Beam to Angle)		5/8" Carriage Bolts
FOOTINGS	1/8" Steel Plate Welded to Post	1/8" Steel Plate Welded to Post	1/8" Steel Plate Welded to Post		None
DEVELOPED BY	New York	New York	New York		California
REFERENCE	Appendix A	Appendix A	Appendix A		Appendix A
REMARKS					For cases where a guardrail is warranted in a median, raise beam height to 30 inches and install rubbing rail as shown in MB4.

TABLE 3

SUMMARY OF MEDIAN BARRIER CHARACTERISTICS

STANDARD TYPE	MB1 CABLE	MB2 "W" BEAM	MB3 BOX BEAM	MB4 BLOCKED-OUT "W" BEAM
	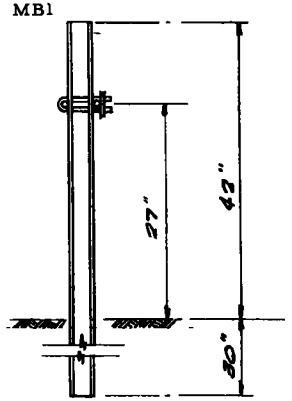	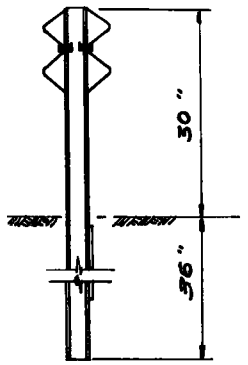	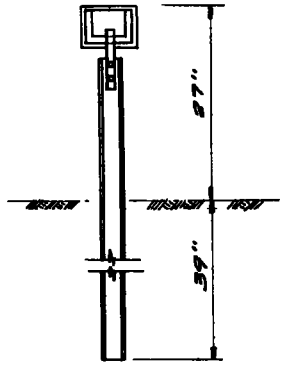	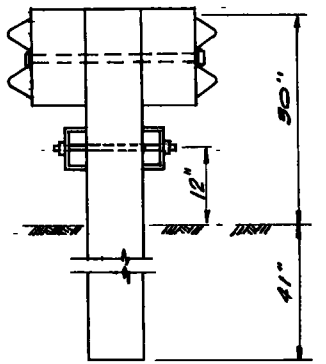
DEFLECTION	11 ft	7 ft	2 ft	2 ft
POST SPACING	8'-0"	12'-6" Nominal	6'-0"	6'-3"
POST	2-1/4" H 4.1	3" I 5.7	3" I 5.7	8" x 8" Douglas Fir
BEAM	Two 3/4" Dia Steel Cables	Two Steel "W" Sections	8" x 6" x 1/4" Steel Tube	Two Steel "W" Sections Two 6 [8.2 Steel Sections
OFFSET BRACKETS	—	—	—	Two 8" x 8" x 1'-2" Douglas Fir Blocks
MOUNTINGS	1/2" Dia Steel "U" Bolts	5/16" Dia Bolts	Steel Paddles (see details)	5/8" Carriage Bolts
FOOTINGS	Details vary with application	1/8" Steel Plate Welded to Post	1/8" Steel Plate Welded to Post	None
DEVELOPED BY	California	New York	New York	California
REFERENCE	Appendix A	Appendix A	Appendix A	Appendix A
REMARKS	Use on flat medians or on saw-tooth sections with slope flatter than 3:1 or with step less than 6 inches in height.	For saw-tooth medians use two guardrail installations	Use on flat medians or on saw-tooth sections with slope flatter than 3:1 or with step less than 6 inches in height.	Stagger beam heights when the saw-tooth step is over 6 inches high and/or the median slope is 3:1 or steeper.

TABLE 3 (*Continued*)

STANDARD TYPE	MB5 CONCRETE BARRIER 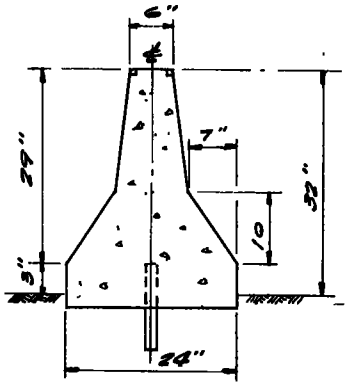	MB6 CONCRETE BARRIER 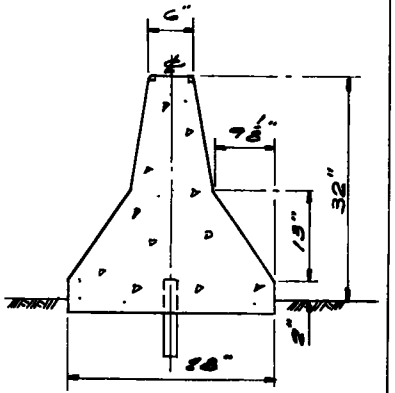
DEFLECTION	0	0
DOWELS (into existing pavement)	1" Dia x 8" Long Steel Rod	1" Dia x 8" Long Steel Rod
DOWEL SPACING	4'-0"	4'-0"
CONCRETE	Class B*	Class B*
DEVELOPED BY	New Jersey	General Motors
REMARKS	Use on narrow medians Use of barrier profile is recommended at retaining walls, rock cuts, etc. (see Figure B-7)	Use on narrow medians Use of barrier profile is recommended at retaining walls, rock cuts, etc. (see Figure B-7)

*AASHO Class B

and approach and terminal sections, should occur outside the warranted length so that within the warranted length the protective system is at its typical design condition. Section ends should be treated as shown in the standards.

4. Use the principles outlined in Appendix B to determine layout details.

5. Make a field review, near the completion of highway construction, before setting the final installation limits. Short gaps between installations should be avoided.

TABLE 4

MAINTENANCE AND UPGRADING RECOMMENDATIONS

CLASSIFICATION	EVALUATION			RECOMMENDED ACTION
	WARRANTED	STANDARD DESIGN	STANDARD LAYOUT	
I. Conforming An existing installation which is warranted, designed, and laid out in accordance with the criteria outlined in Chapters 2 and 3.	Yes	Yes	Yes	If the warrant cannot be removed by correcting the warranting feature, thereby permitting removal of the installation, a conforming installation should be serviced to assure an "as-built" condition in accordance with the design standards and specifications. This includes, for example, replacing damaged parts with new parts, and adjusting height and alignment.
II. Nonconforming An existing installation which fails to meet the warranting, design, or layout criteria of Chapters 2 and 3.				
A. Unwarranted An installation which is not required by the warranting criteria of Chapter 2 regardless of its design and layout.	No	Not Applicable	Not Applicable	UNWARRANTED INSTALLATIONS SHOULD BE REMOVED.
B. Unverified Design An installation which is both warranted and of an approved layout but neither (1) conforms with the designs recommended herein nor (2) has been experimentally verified by a full-scale crash test program and satisfactory service performance.	Yes	No	Yes	If the warrant cannot be removed by correcting the warranting feature, thereby permitting removal of the installation, undamaged installations of unverified design should be verified by a full-scale crash test program and satisfactory field performance or modified as soon as economically practical to conform to the design standards recommended herein. If the warrant cannot be removed by correcting the warranting feature, thereby permitting removal of the installation, extensively damaged installations of unverified design should be replaced with a standard design recommended herein. Replacement cannot await verification by a crash-test program and satisfactory field performance as in the case of undamaged installations. Median barriers that have been extensively damaged should be replaced, at least in the damaged area, by a design recommended herein. If transitions cannot be made at natural breaks in the median (e.g., bridge piers), the replacement section should (1) be securely attached to the existing installation, (2) be anchored so both designs function effectively, and (3) not create sharp, hazardous transition sections.
C. Inadequate Layout An installation which is both warranted and of an approved design (Appendix A), but deviates from the recommended layout details (Appendix B).	Yes	Yes	No	If the warrant cannot be removed by correcting the warranting feature, thereby permitting removal of the installation, improper layout should be adjusted as soon as possible to conform to the layout standards recommended herein.

CHAPTER FOUR

MAINTENANCE AND UPGRADING OF EXISTING INSTALLATIONS

Guardrail and median barrier maintenance and upgrading consist of examination and evaluation, classification of installation adequacy, and delineation of the action to be taken. The scope of each of these topics is introduced in the following paragraphs. Table 4 summarizes the classifications and servicing actions required for existing guardrails and median barriers. Excluded from consideration are routine types of maintenance (such as painting) performed periodically.

Examination and evaluation of existing guardrail and median barrier installations may result from (1) routine or scheduled maintenance, (2) damage, or (3) administrative or technical conditions requiring evaluation of an installation's adequacy. On examination, an installation is evaluated with respect to its satisfying warrant and design standards, and, after evaluation, it is suggested that it be assigned one of the classifications which follow. This evaluation includes a review of original considerations used in warranting and designing the installation and an objective assessment of the installation in terms of current physical and traffic conditions at the installation site. When an existing guardrail or median barrier installation is evaluated, possible installation removal should always be explored. Removal is permitted when the installation is shown to be unwarranted by the warranting criteria of Chapter Two or when the site features which dictate barrier needs have been altered. (For example, flattening an embankment slope may remove conditions requiring a shoulder guardrail installation.) Removal in this manner is always preferable to maintaining, replacing, or upgrading an installation.

Existing guardrail and median barrier installations are classified as to (1) conforming, (2) nonconforming (inadequate layout), (3) nonconforming (unverified design), or (4) nonconforming (unwarranted). As shown in Table 4, classification is determined by considering three installation features—warrants, design, and layout. Servicing action is dictated by the classification; servicing actions for damaged and undamaged installations of various classifications are outlined in Table 4.

In servicing guardrails and median barriers, actions outlined in Table 4 should be accomplished in as timely a manner as possible commensurate with the hazard presented and available funds.

APPENDIX A

RECOMMENDED STANDARDS

This appendix contains the standards and essential details of the recommended guardrail and median barrier systems discussed in Chapter Three.

No alterations should be made in these standards. Full-scale tests indicate that minor structural changes can affect guardrail effectiveness.

The following standards are included:

Standard	Type	Page
G1	Cable Guardrail	13
Sheet 1	Transition Details; G1, G2, G3	15
G2	W-Beam Guardrail	17
G3	Box Beam Guardrail	19
Sheet 2	Bridge Approach Layout, Box Beam	21
Sheet 3	Details for Appurtenances, Box Beam	23
Sheet 4	Connection Details, Box Beam	25
G4	Blocked-Out W-Beam Guardrail	27
Sheet 5	End-Anchorage Details, Blocked-Out W-Beam	29
Sheet 6	Flare Details, Blocked-Out W-Beam	31
Sheet 7	Flare Details, Blocked-Out W-Beam	33
Sheet 8	Connection Details, W-Beam Guardrail	35
MB1	Cable Median Barrier	37
MB2	W-Beam Median Barrier	39
MB3	Box Beam Median Barrier	41
MB4	Blocked-Out W-Beam Median Barrier	43
MB5	Concrete Median Barrier	44
MB6	Concrete Median Barrier	44

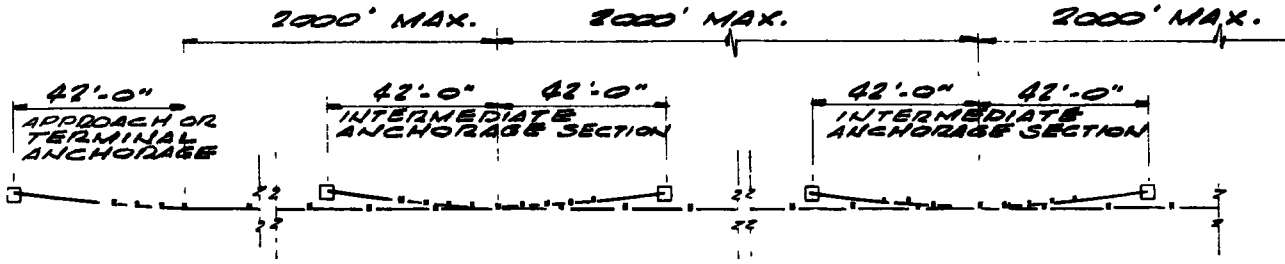

TYPICAL LAYOUT
PLAN

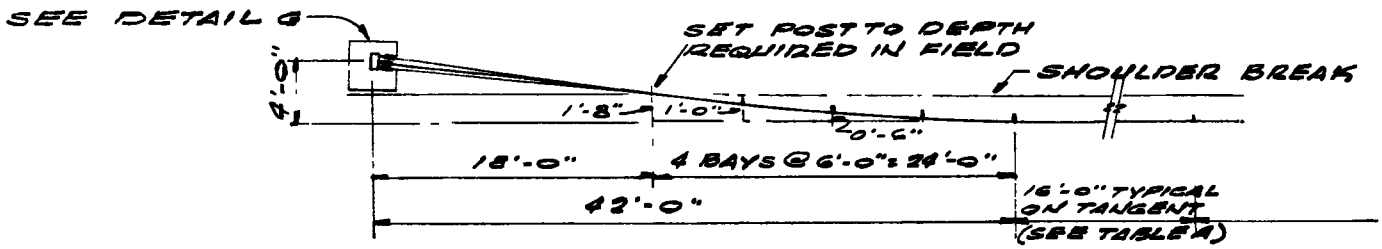

PLAN

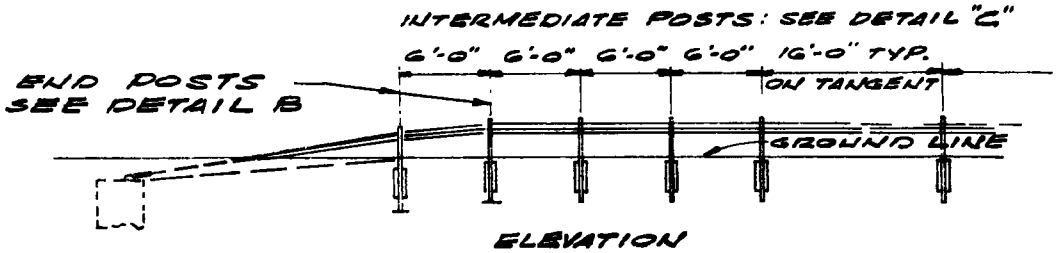

ELEVATION

TYPICAL APPROACH & TERMINAL SECTIONS

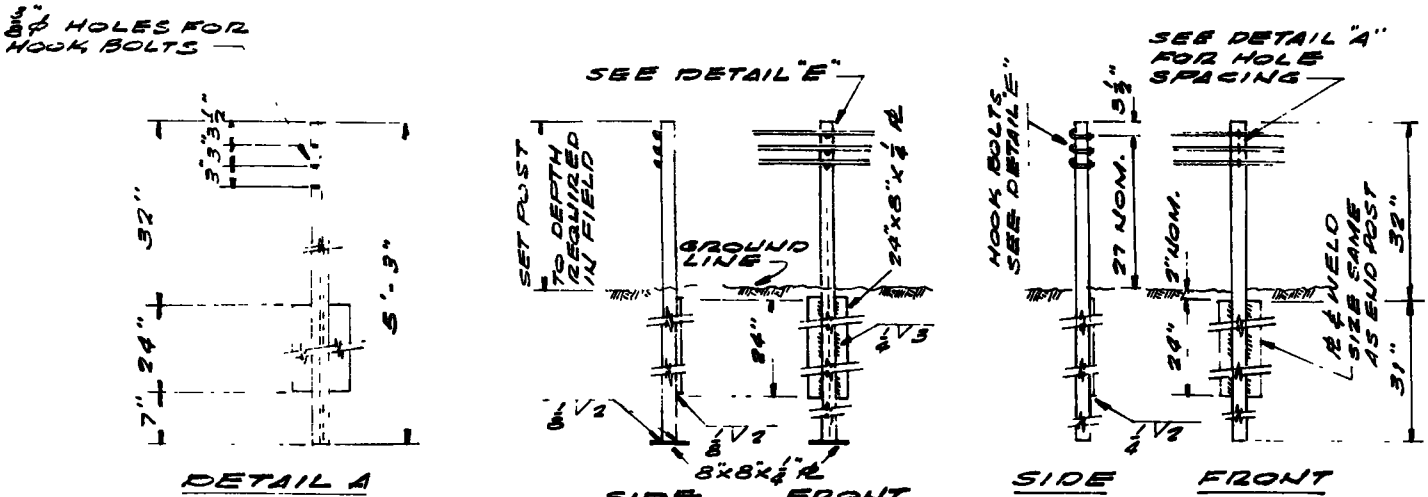

DETAIL A
INTERMEDIATE POST
3"x2 3/8" I @ 5.7#

SIDE FRONT
DETAIL B
END POST
3"x2 3/8" I @ 5.7#

SIDE FRONT
DETAIL C
INTERMEDIATE POST
3"x2 3/8" I @ 5.7#

LOAD CAPACITY 25,000 LBS.

DETAIL D

STEEL TURNBUCKLE CABLE END ASSEMBLY

TABLE A	
CURVATURE (DEGREE OR RADIUS)	POST SPACING
8° OR LESS	16'
8° TO 26° (220 FT. RADIUS	12'
219 FT. TO 111 FT.	6'
110 FT. TO 76 FT.	4'
75 FT. TO 50 FT.	3'
LESS THAN 50 FT	USE NOT RECOMMENDED

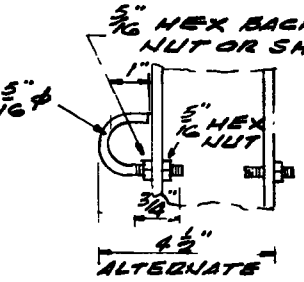

DETAIL E
HOOK BOLT

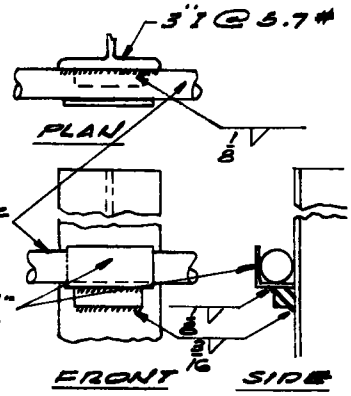

DETAIL F
CABLE MOUNTS ON END POSTS

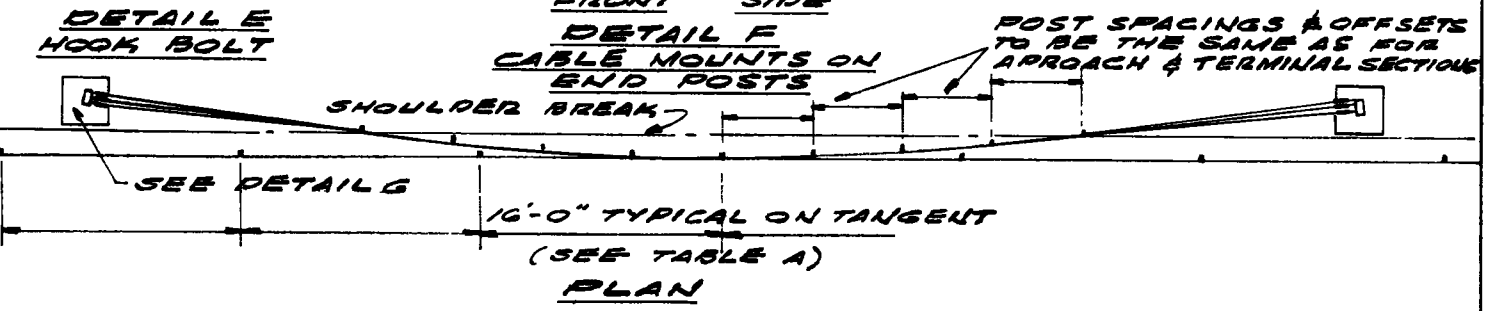

PLAN

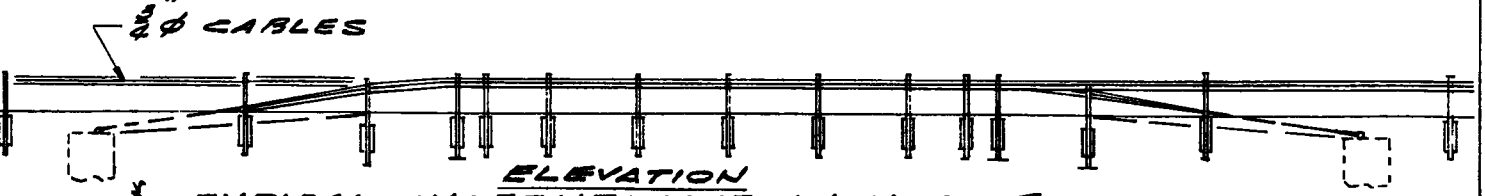

ELEVATION
TYPICAL INTERMEDIATE ANCHORAGE SECTION

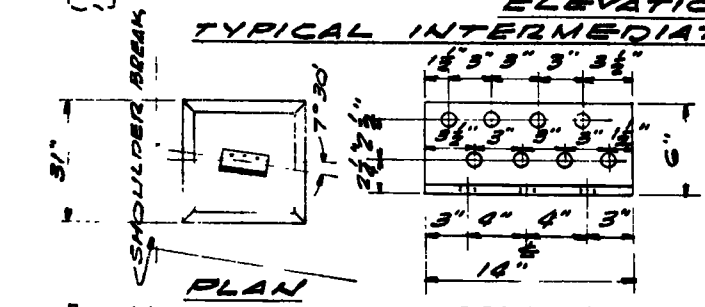

PLAN

DETAIL H
ANCHOR ANGLE
4"x6"x 1/2" L x 14"

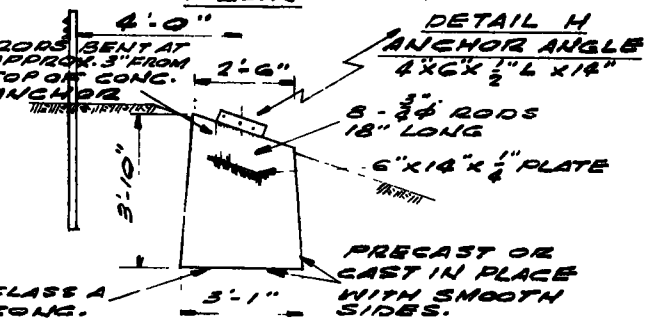

ELEVATION
DETAIL G
CONCRETE ANCHOR

G1 GENERAL NOTES

1. ALL FITTINGS, CABLE SPLICES, CABLE ENDS ETC., SHALL BE DESIGNED TO DEVELOP THE FULL STRENGTH OF A SINGLE CABLE OR CABLE ASSEMBLIES AS THE CASE MAY BE.

   SINGLE CABLE ASSEMBLY MIN. TENSILE STRENGTH 25,000 LBS.

   THREE CABLE ANCHOR ASSEMBLY MIN. TENSILE STRENGTH 100,000 LBS.

2. HOOK BOLTS, AS INSTALLED SHALL DEVELOP AN ULTIMATE PULL OPEN STRENGTH OF BETWEEN 500 LBS. AND 1000 LBS. APPLIED IN A DIRECTION NORMAL TO THE LONGITUDINAL AXIS OF THE POST.

GUARDRAIL
STANDARD G1
CABLE

DATE JUNE 1968 REV. _____

DEVELOPED BY NEW YORK

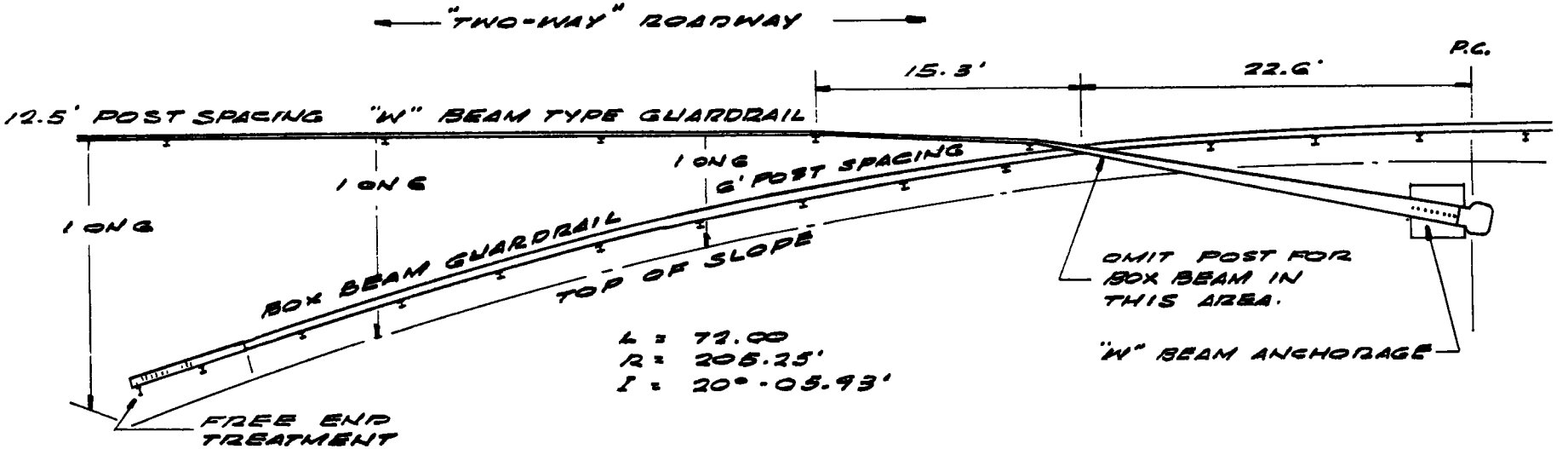

(a) BOX BEAM TO "W" BEAM TRANSITION (G3 TO G2)

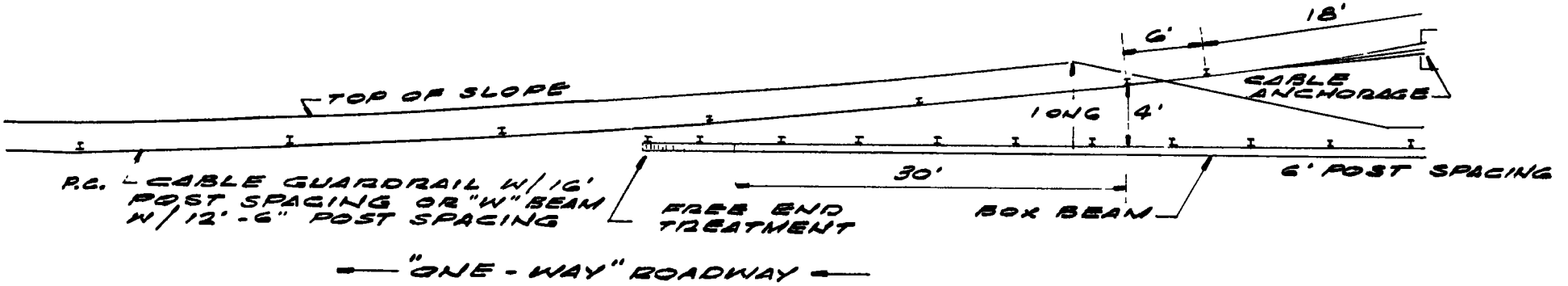

(b) BOX BEAM TO CABLE TRANSITION (G3 TO G1)
BOX BEAM TO "W" BEAM TRANSITION (G3 TO G2)

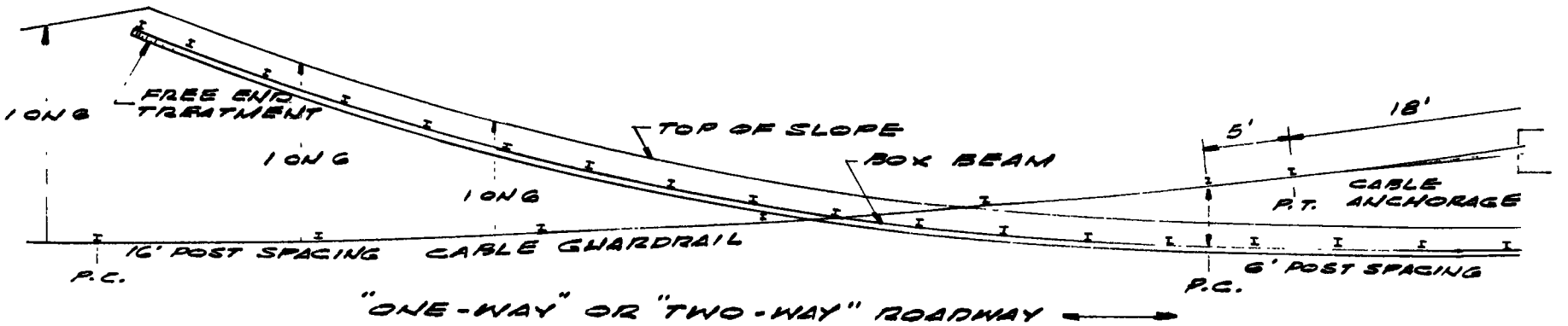

(c) CABLE TO BOX BEAM TRANSITION (G1 TO G3)

SHEET 1
TRANSITION DETAILS
G1, G2, G3
DATE JUNE 68 REV. ____
DEVELOPED BY NEW YORK

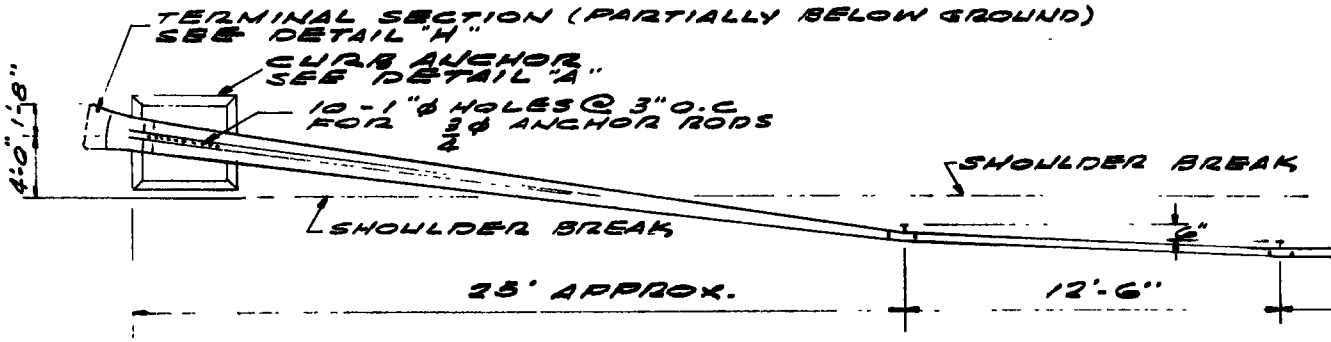

PLAN

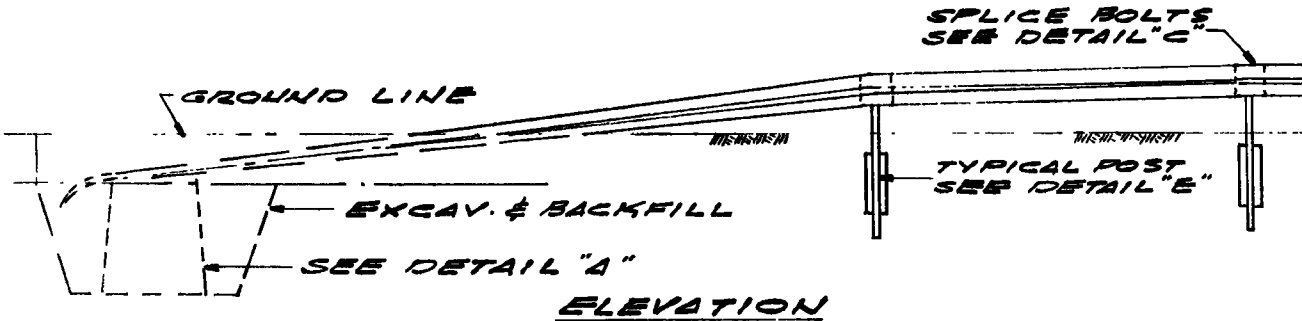

ELEVATION

TYPICAL APPROACH & TERMINAL SECTIONS

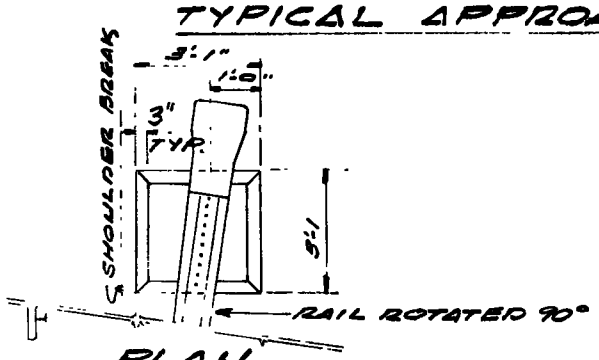

PLAN

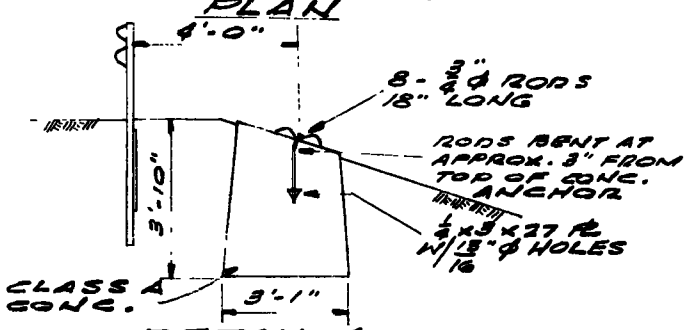

DETAIL A
CONCRETE ANCHOR

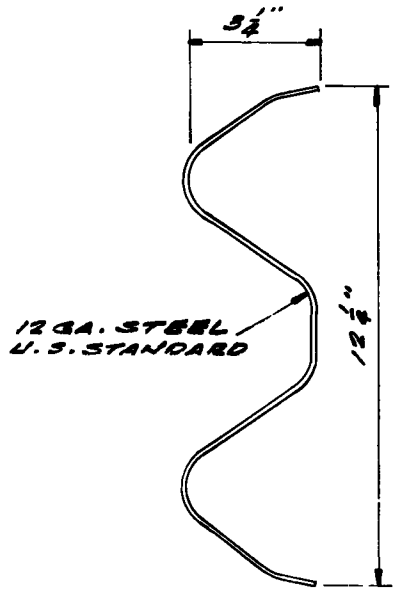

DETAIL B
RAIL ELEMENT

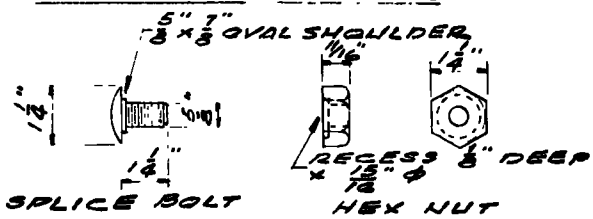

DETAIL C
BEAM SPLICE HARDWARE

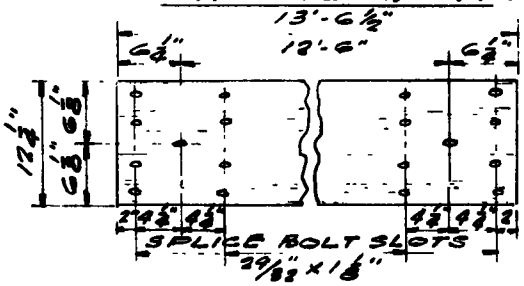

DETAIL D
TYPICAL RAIL SECTION

TABLE A	
CURVATURE DEGREE OR RADIUS	POST SPACING
8° OR LESS	12'-6"
8° TO 26° (220 FT. RADIUS)	12'-6"
219 FT. TO 111 FT.	6'-3"
110 FT. TO 76 FT.	4'-2"
75 FT. TO 50 FT.	3'-1 1/2"
LESS THAN 50 FT.	USE NOT RECOMMENDED

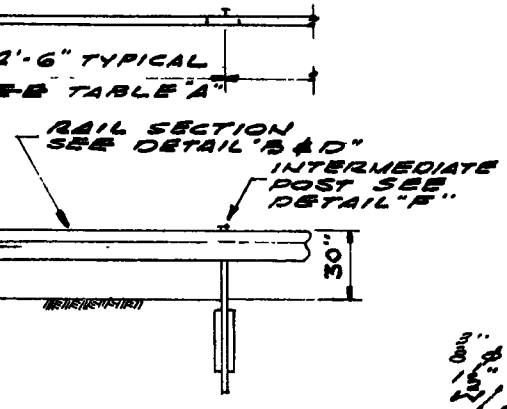

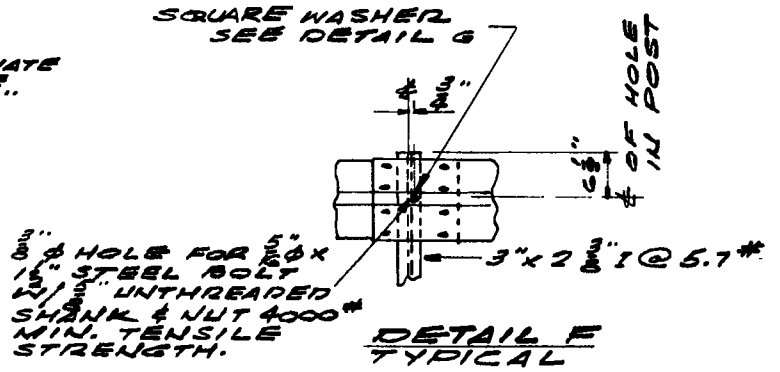

DETAIL F
TYPICAL
BEAM MOUNTING

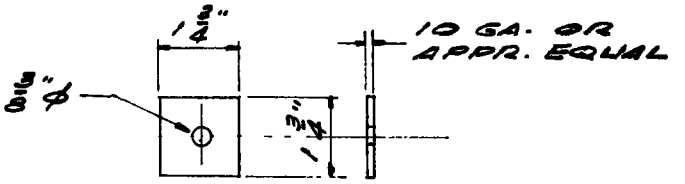

PLACE WASHER IN VALLEY OF BEAM WHEN MOUNTING BEAM TO INTERMEDIATE POST

DETAIL G
SQUARE WASHER

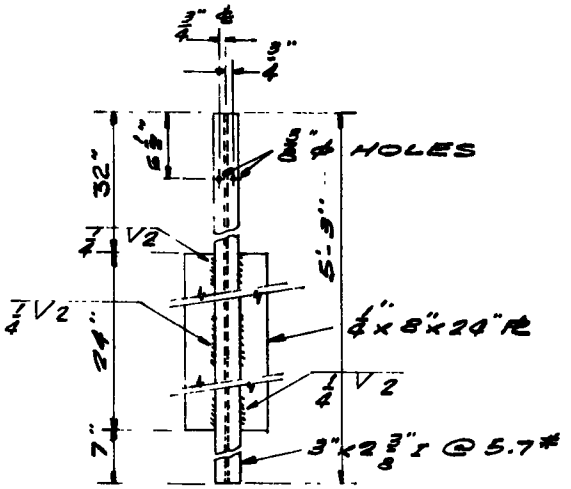

FRONT ELEV.
DETAIL E
INTERMEDIATE POST

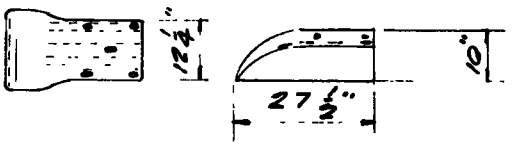

DETAIL H

GUARDRAIL
STANDARD G 2
"W" BEAM

DATE JUNE 1968 REV. _____
DEVELOPED BY NEW YORK

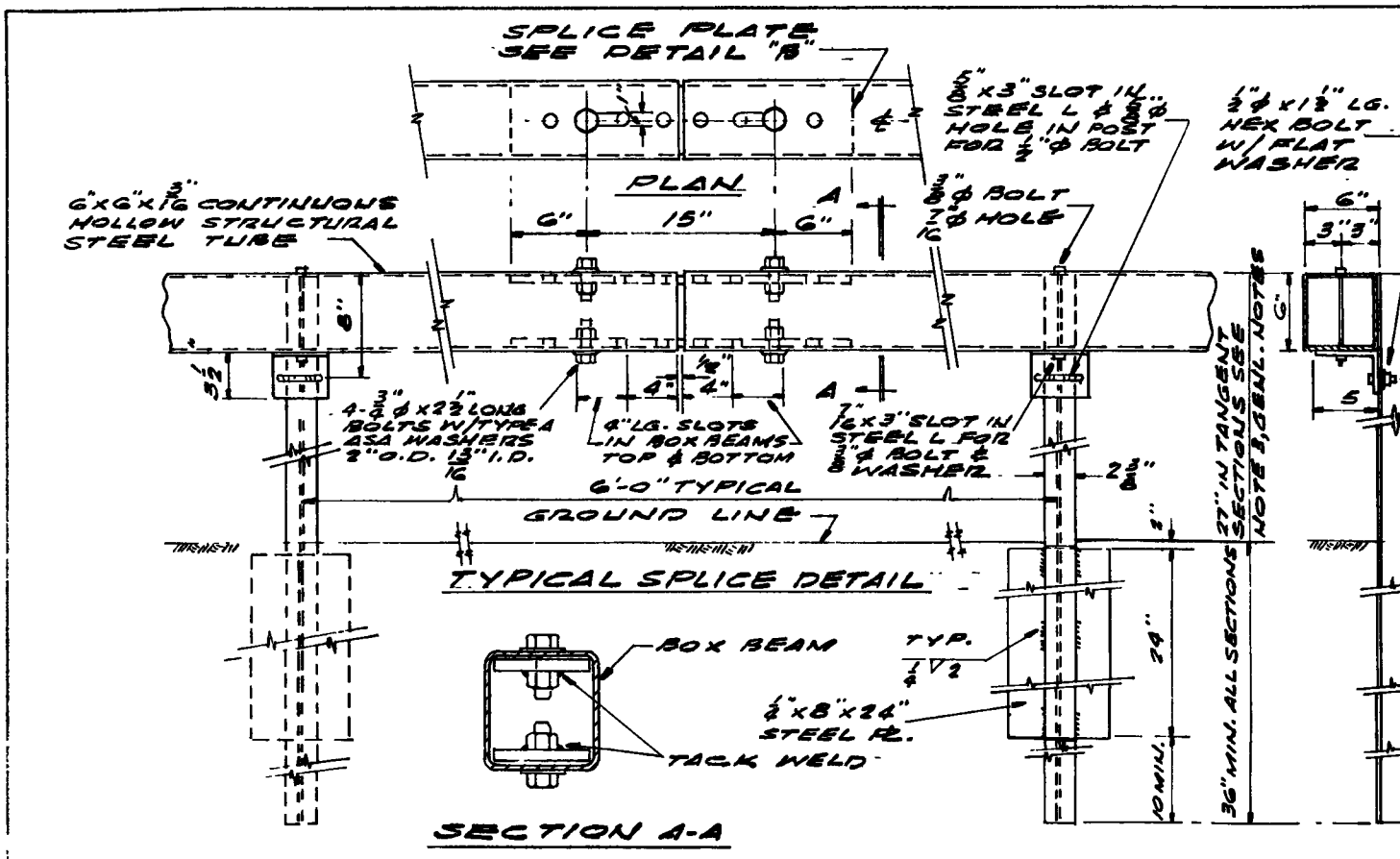

ELEVATION
TYPICAL TANGENT SECTION

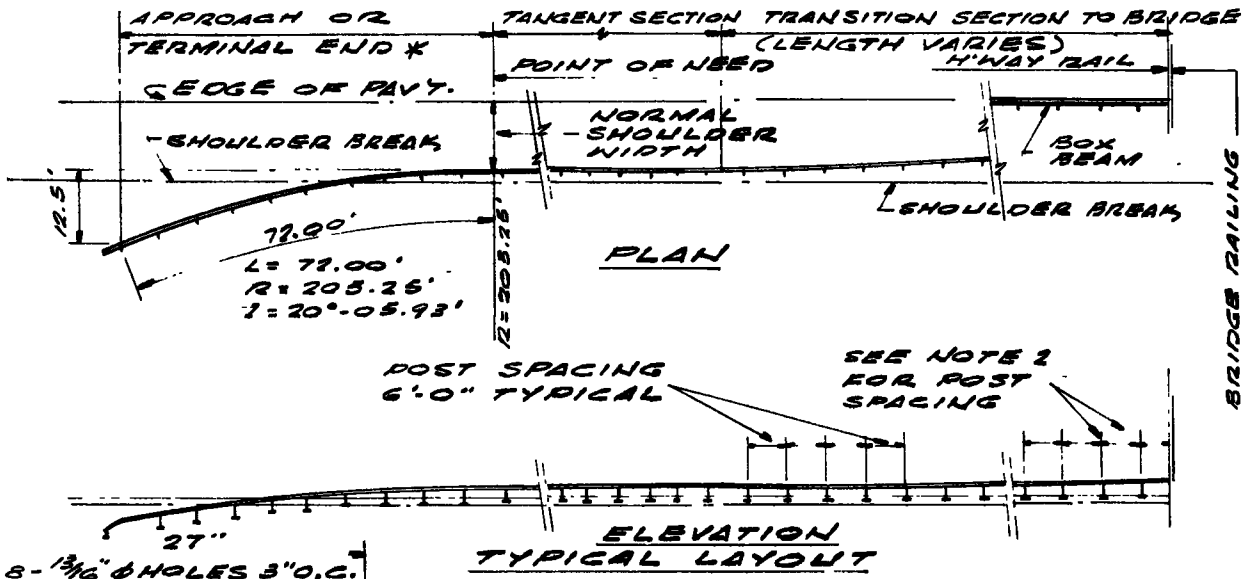

ELEVATION
TYPICAL LAYOUT

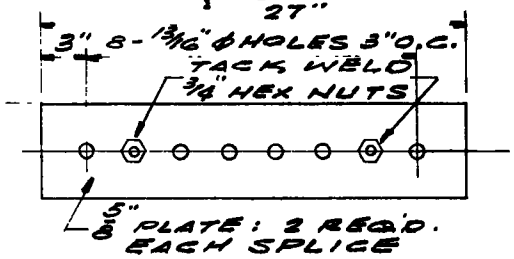

DETAIL B
SPLICE PLATE

* USE ON ALL APPROACH ENDS AND TERMINAL ENDS WHEREVER THERE IS POSSIBILITY OF END IMPACT BY VEHICLES FROM OPPOSING TRAFFIC LANES.

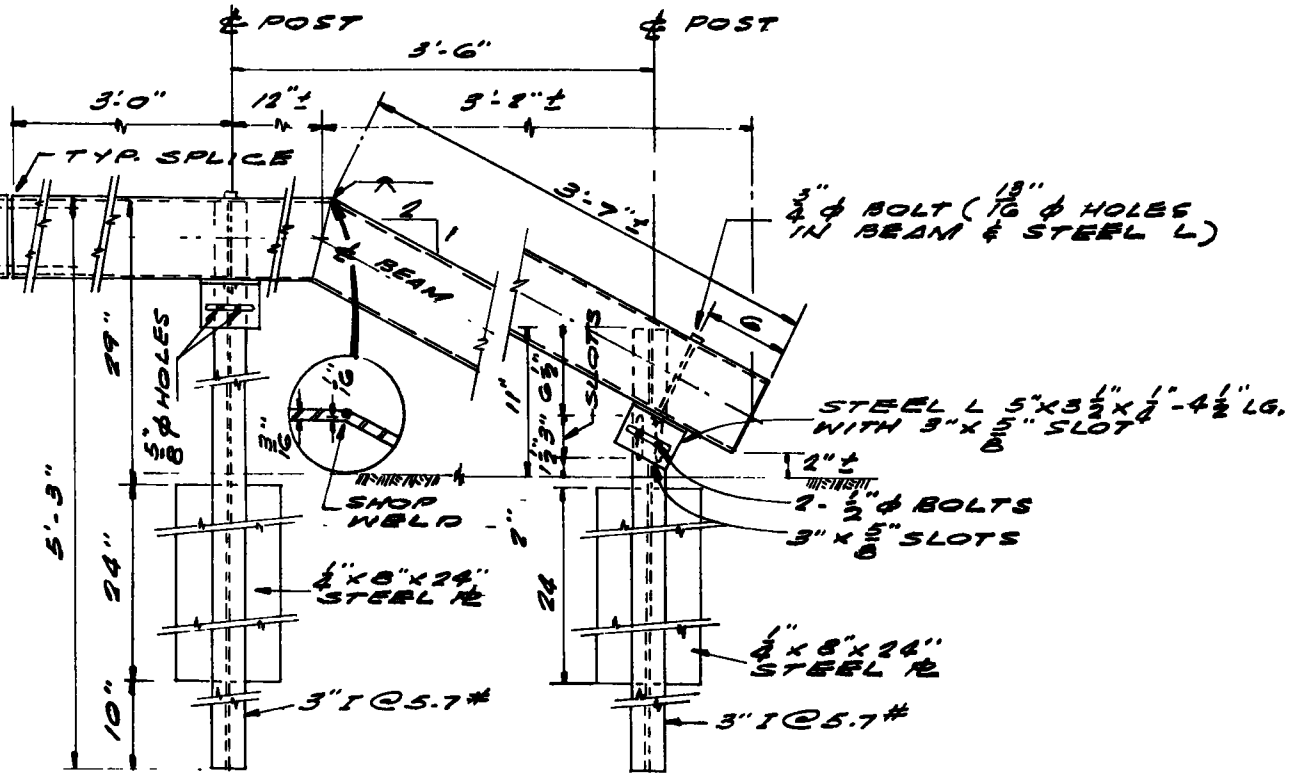

ELEVATION

TYPICAL END TREATMENT AT FREE ENDS

G3 GENERAL NOTES:

1. EXTEND APPROACH & TERMINAL END TRANSITIONS BEYOND POINT OF NEED AS SHOWN IN "TYPICAL LAYOUT."
2. POST SPACING SHALL BE 6'-0" EXCEPT IN VICINITY OF THE JUNCTION OF THE GUARDRAIL AND THE BRIDGE APPROACH. AT BRIDGE APPROACHES, 12 POST SPACES @ 4'-0" IS USED FOR TRANSITION.
3. IN APPROACH AND TERMINAL END SECTIONS, POST HEIGHTS MAY AVERAGE 24" TO 30"
4. WHEN THE SIDE CLEARANCE FROM THE BACK FACE OF THE BEAM TO THE FRONT FACE OF A FIXED OBJECT IS LESS THAN 4 FT., REDUCE POST SPACING TO 4 FT. AND PROVIDE 24 FT. OF BEAM LEADING AND 24 FT. LEAVING THE POINT OF THE FIXED OBJECT AT THE 4 FT. POST SPACING, HOWEVER, THE BACK CLEARANCE AT 4 FT. POST SPACING MUST BE 2 FT. MINIMUM.
5. FOR CURVES GREATER THAN 8° BOX BEAM SHALL BE SHOP WORKED TO THE REQUIRED CURVATURE.

GUARDRAIL
STANDARD G 3
BOX BEAM

DATE JUNE 1968 REV.
DEVELOPED BY NEW YORK

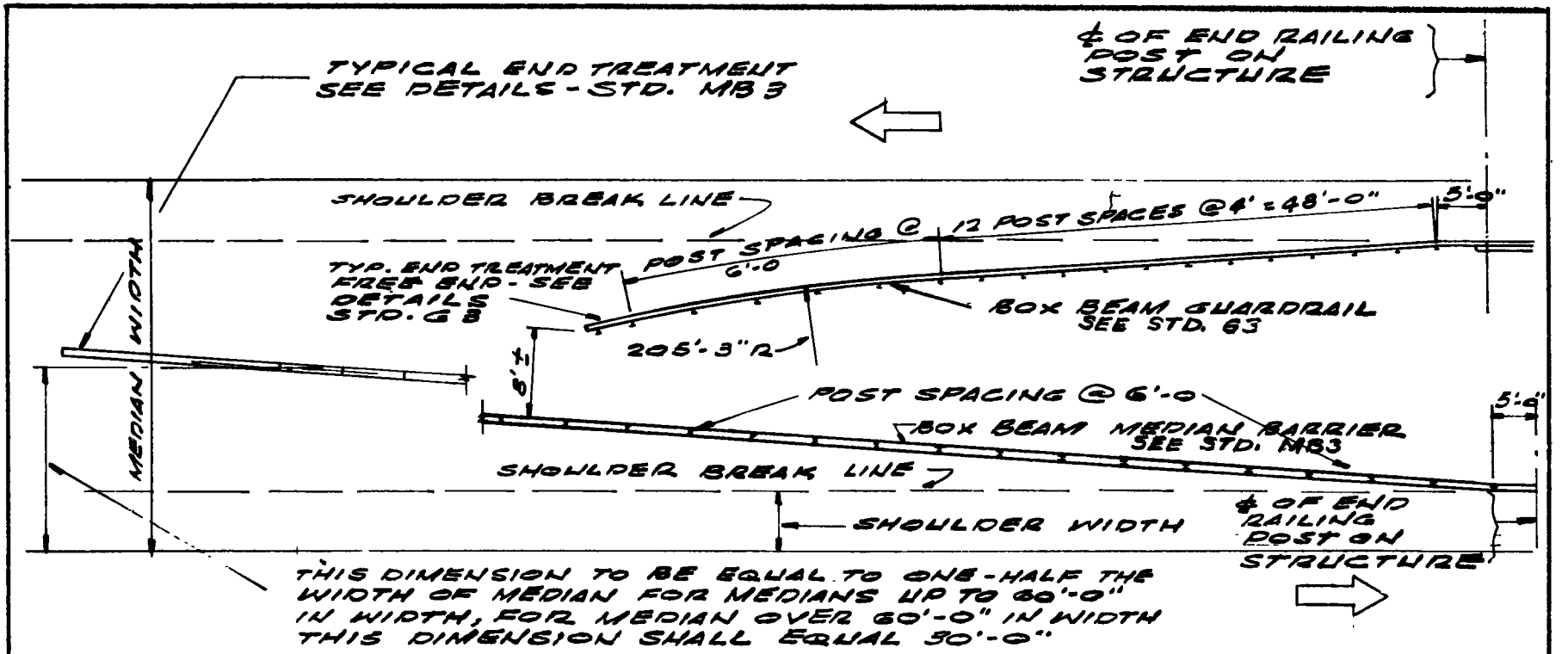

PLAN OF MEDIAN

GENERAL NOTES:

1. THIS LAYOUT IS FOR BRIDGE APPROACHES WHERE GUARD-RAIL AND MEDIAN BARRIERS ARE WARRANTED FOR THE BRIDGE APPROACH ONLY.
2. TRAFFIC DIRECTION IS INDICATED BY ⇨
3. FOR OTHER DETAILS, SEE STANDARDS MB 3 AND G 3

SHEET 2

BRIDGE APPROACH LAYOUT
BOX BEAM

DATE JUNE 1968 REV.

DEVELOPED BY NEW YORK

INSTALLATION ON MEDIANS WITHOUT MEDIAN BARRIER

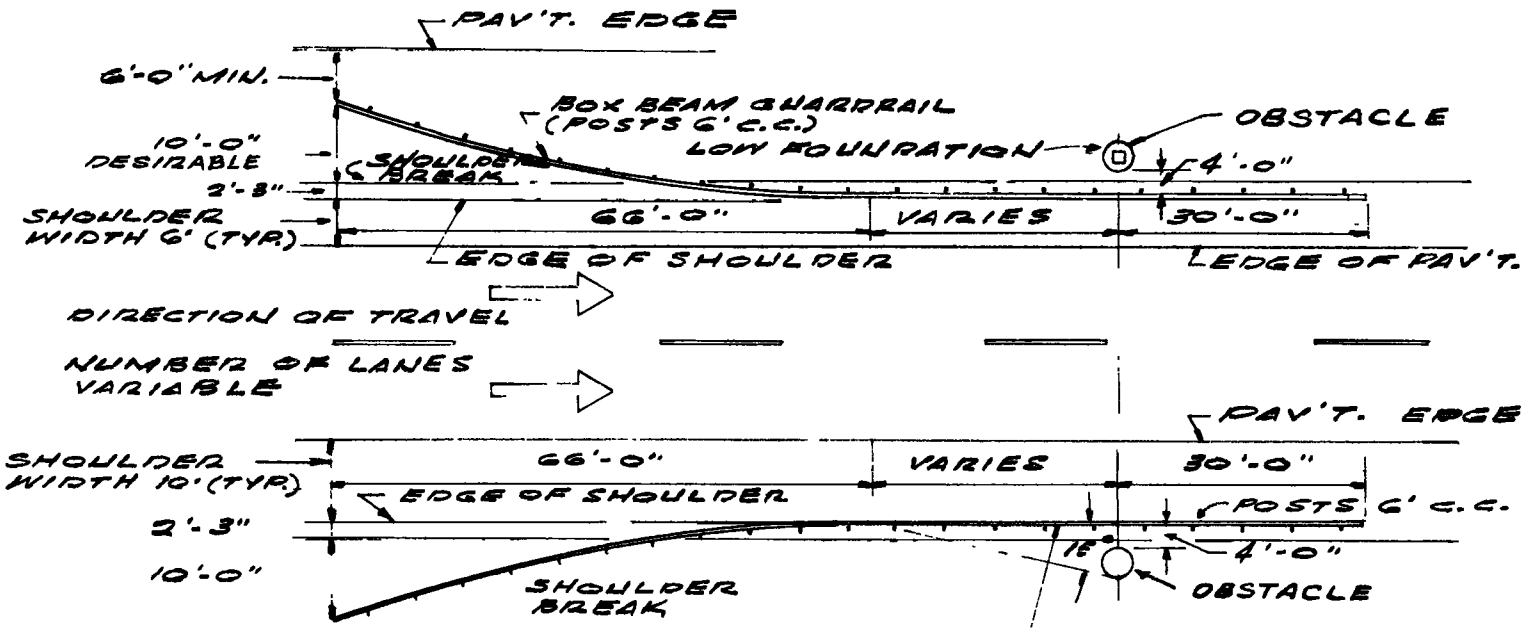

INSTALLATION ON SHOULDER

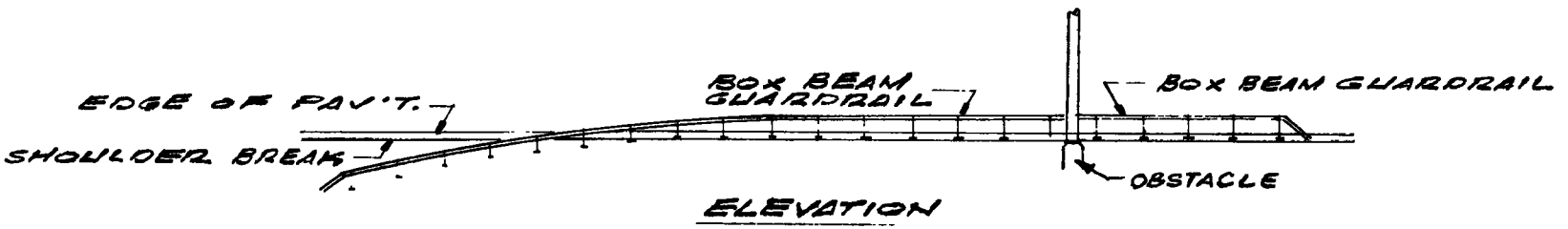

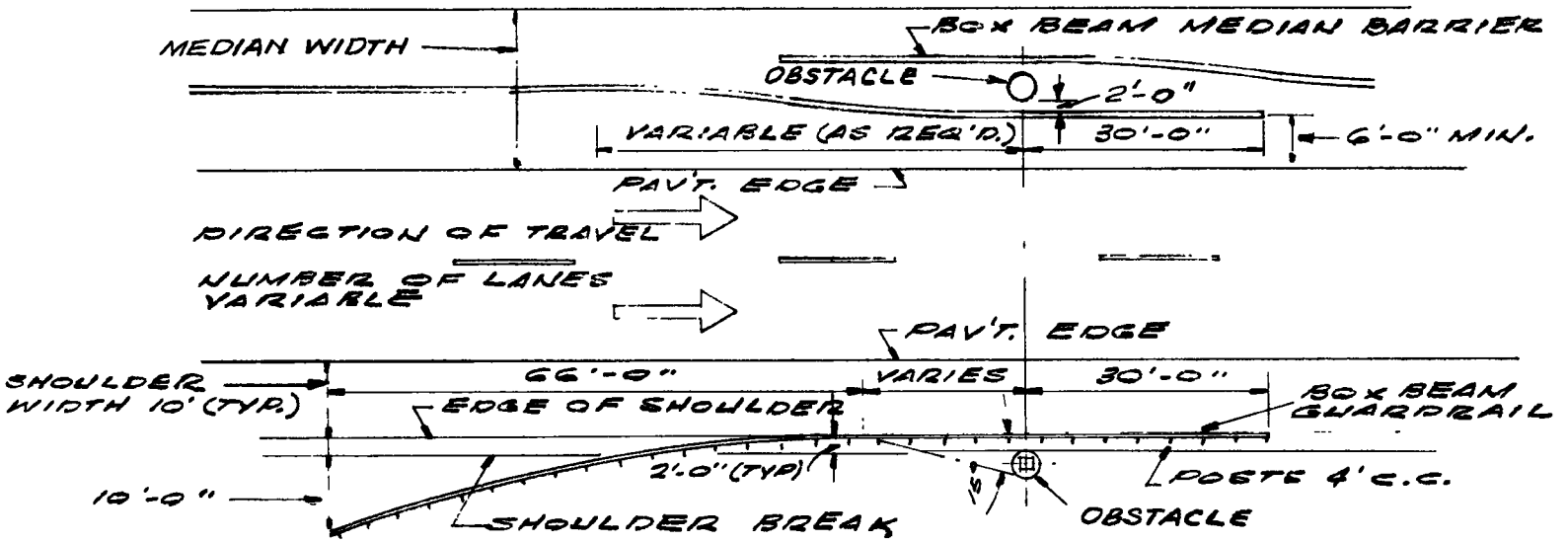

PLAN

INSTALLATION AT EXISTING OBSTACLES

SHEET 3

DETAILS FOR APPURTENANCES

BOX BEAM

DATE JUNE 68 REV.

DEVELOPED BY NEW YORK

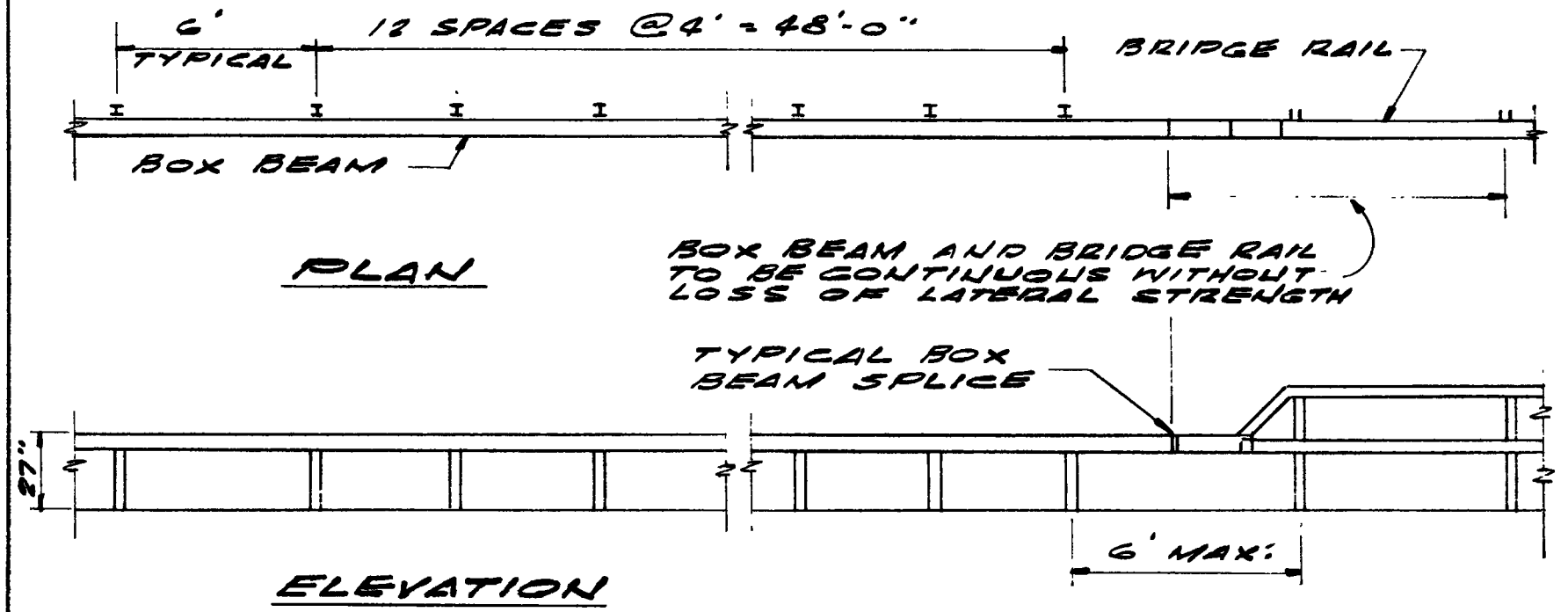

TRANSITION BOX BEAM GUARDRAIL TO BRIDGE RAIL

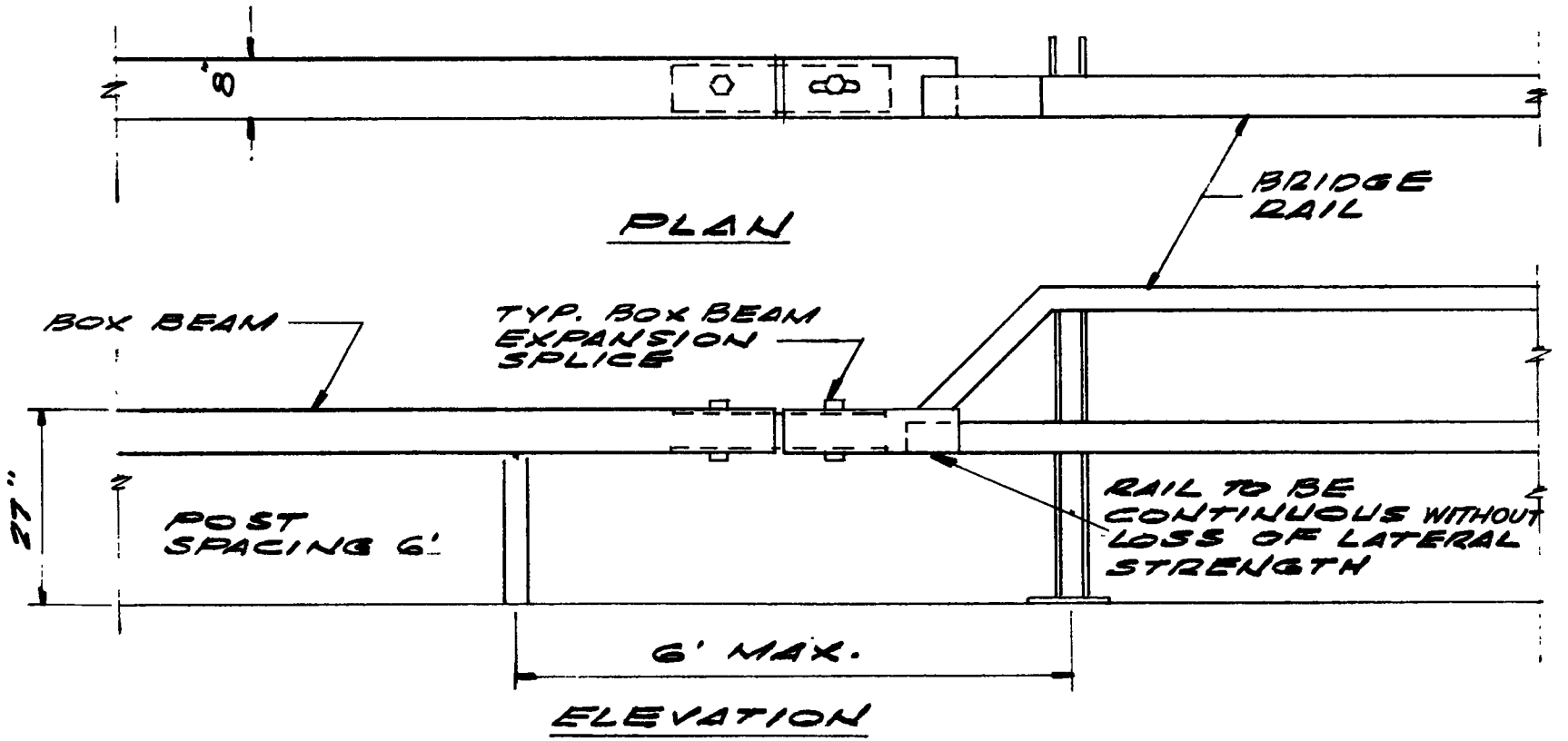

TRANSITION BOX BEAM MEDIAN BARRIER TO BRIDGE RAIL

SHEET 4
CONNECTION DETAILS
BOX BEAM

DATE JUNE 1968 REV. _____
DEVELOPED BY NEW YORK

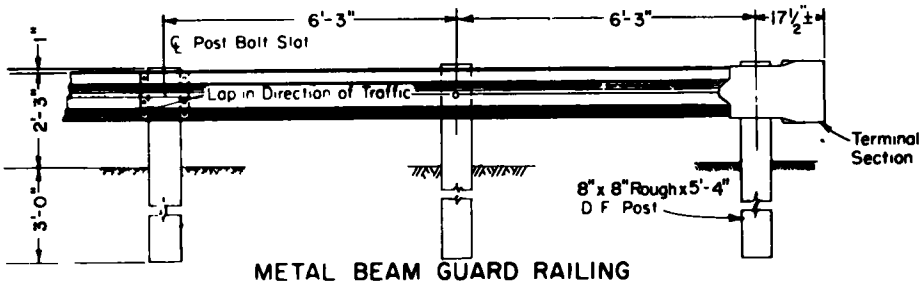

METAL BEAM GUARD RAILING

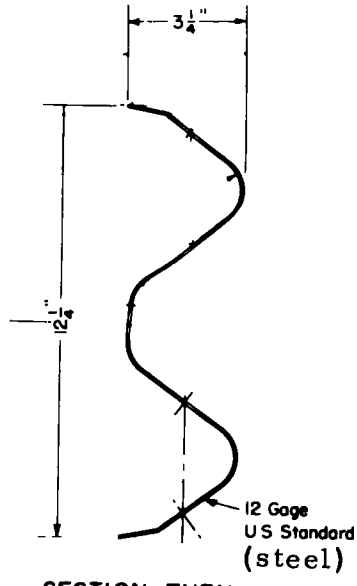

SECTION THRU RAIL ELEMENT

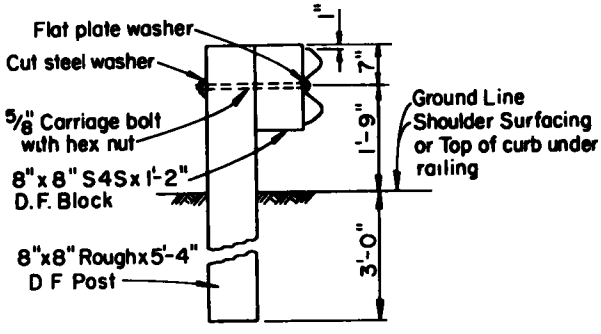

Typical post spacing 6'-3" C to C.

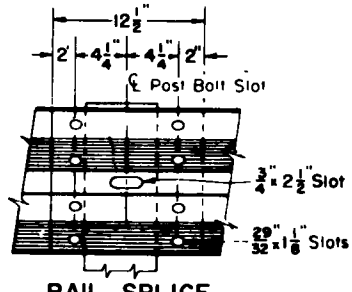

RAIL SPLICE

⅝"x1¼" button head oval shoulder bolts with 1¼" recessed hex nuts Total 8 per splice and 4 per terminal section

GENERAL NOTES

1. Except where noted, cut washers are required at all bolt installations where nut would bear on wood.
2. See Sheet 5 for Anchorage Details.
3. See Sheets 6 and 7 for Flare Details.
4. See Sheet 8 for Connection Details.

GUARDRAIL
STANDARD G4
BLOCKED OUT "W" BEAM

Date JUNE 68 **Rev**

Developed by California

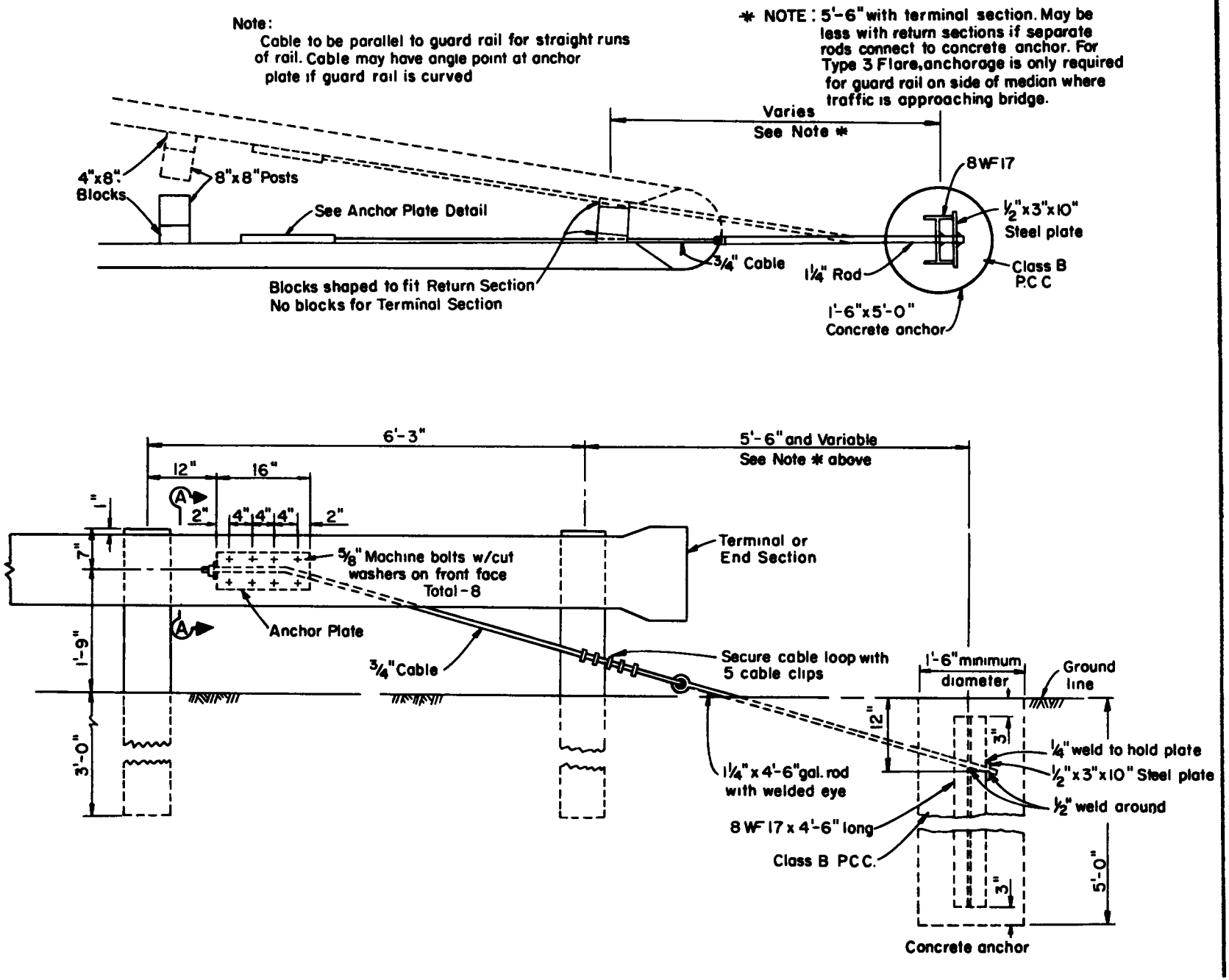
Note:
Cable to be parallel to guard rail for straight runs of rail. Cable may have angle point at anchor plate if guard rail is curved
* NOTE: 5'-6" with terminal section. May be less with return sections if separate rods connect to concrete anchor. For Type 3 Flare, anchorage is only required for guard rail on side of median where traffic is approaching bridge.
Varies
See Note *
4"x8" Blocks
8"x8" Posts
See Anchor Plate Detail
Blocks shaped to fit Return Section
No blocks for Terminal Section
3/4" Cable
1 1/4" Rod
8WF17
1/2"x3"x10" Steel plate
Class B P.C.C
1'-6"x5'-0" Concrete anchor
6'-3"
5'-6" and Variable
See Note * above
12"
16"
1"
2"
4" 4" 4"
2"
7"
5/8" Machine bolts w/cut washers on front face
Total-8
Terminal or End Section
Anchor Plate
1'-9"
3'-0"
3/4" Cable
Secure cable loop with 5 cable clips
1'-6" minimum diameter
Ground line
12"
3"
1/4" weld to hold plate
1/2"x3"x10" Steel plate
1/2" weld around
1 1/4"x4'-6" gal. rod with welded eye
8WF17 x 4'-6" long
Class B PCC.
3"
5'-0"
Concrete anchor

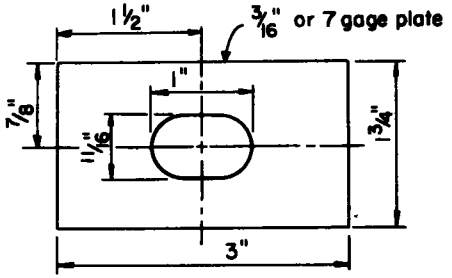

FLAT PLATE WASHER

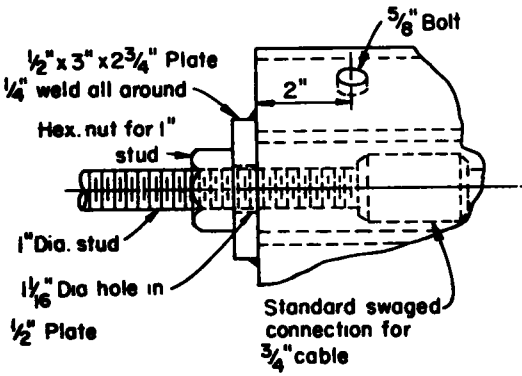

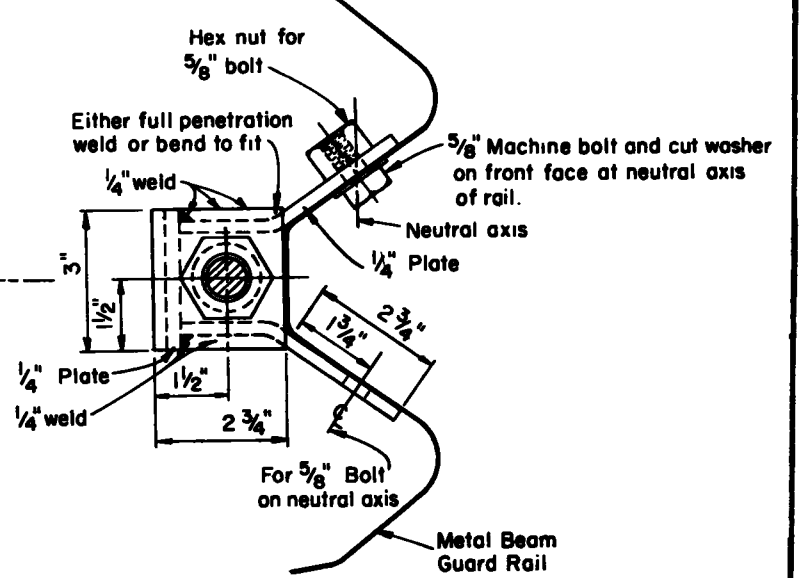

SECTION A-A

ANCHOR PLATE DETAILS

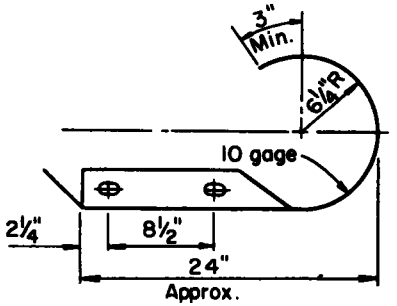

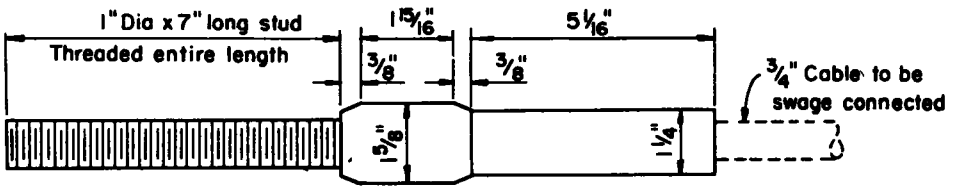

STANDARD SWAGED FITTING AND STUD

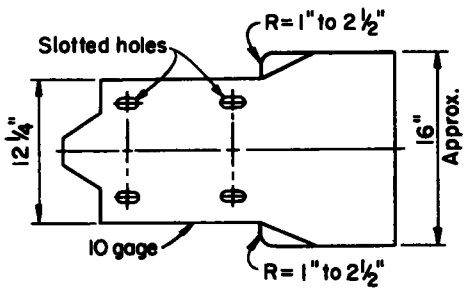

TERMINAL SECTION

SHEET 5

END ANCHORAGE DETAILS

BLOCKED OUT W BEAM

Date JUNE 68 Rev

Developed by California

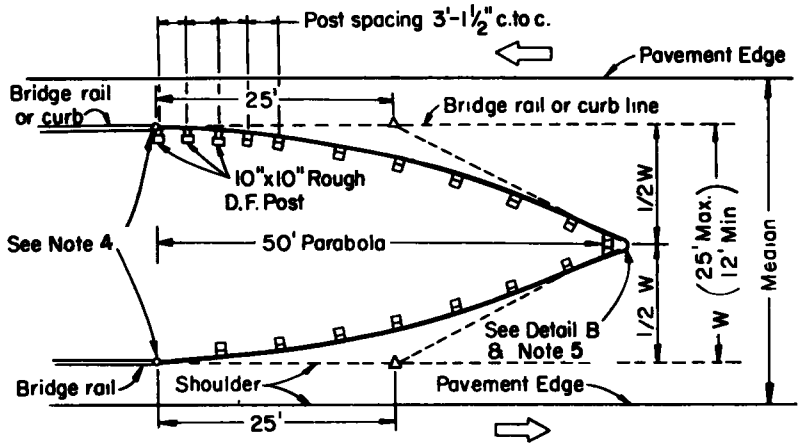

TYPE 3 FLARE

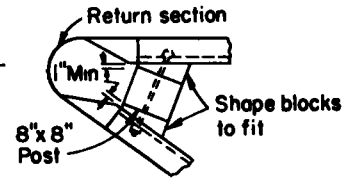

DETAIL B

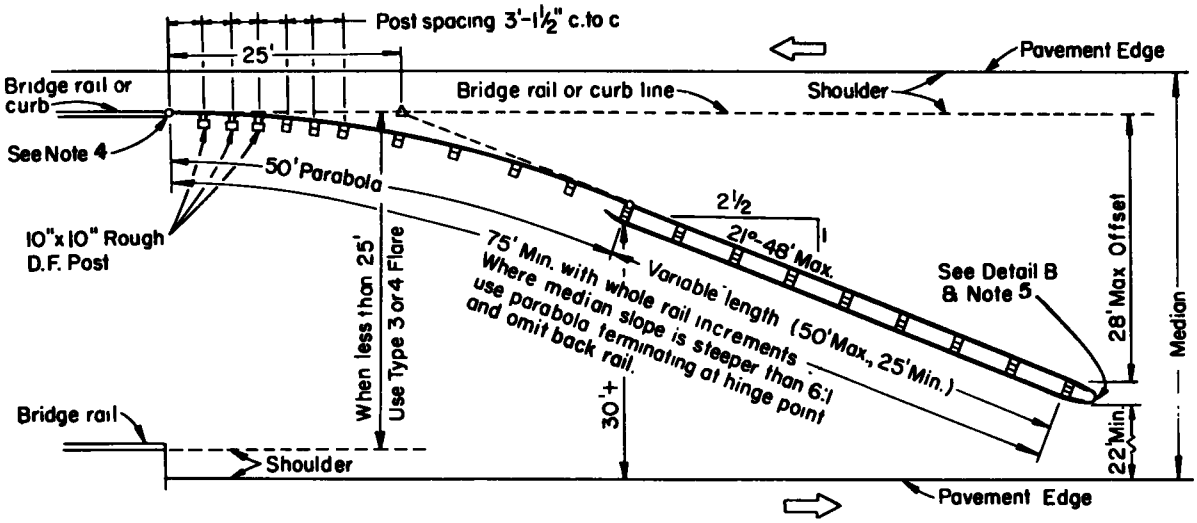

TYPE 2 FLARE

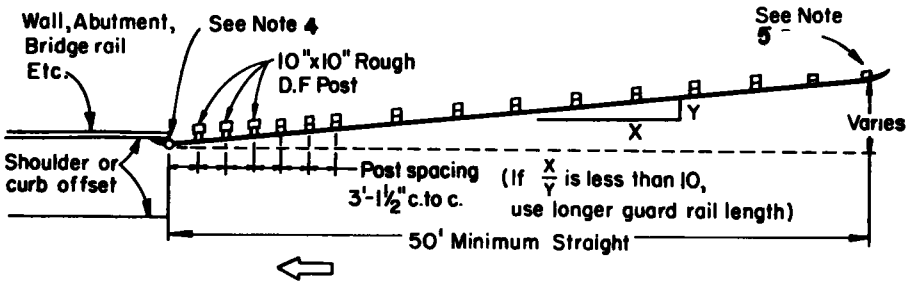

TYPE 1 FLARE

SHOULDER ENCROACHMENTS (RT. or LT.)

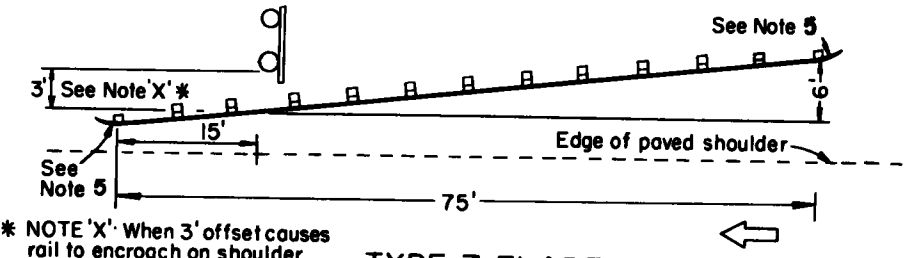

* NOTE 'X' When 3' offset causes rail to encroach on shoulder install guard rail at edge of shoulder.

TYPE 7 FLARE

SHOULDER INSTALLATION AT SIGN STANDARDS

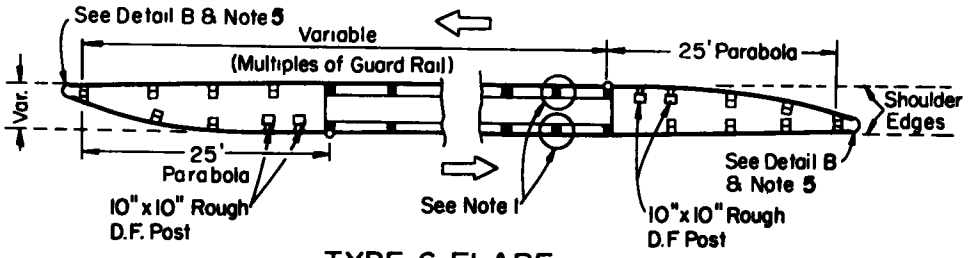

TYPE 6 FLARE

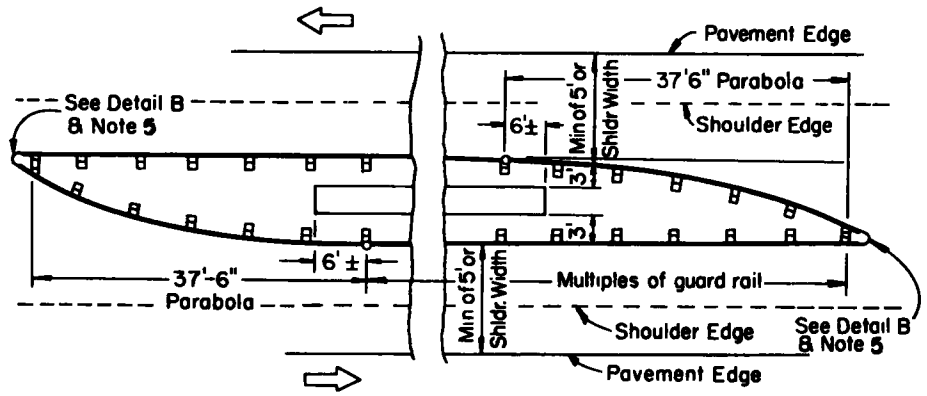

TYPE 5 FLARE

MEDIAN INSTALLATION AT BRIDGE AND/OR SIGN STANDARDS

Where clearance shown cannot be obtained use Type 6 Flare.

GENERAL NOTES

1. See Sheet 7 for applicable notes.

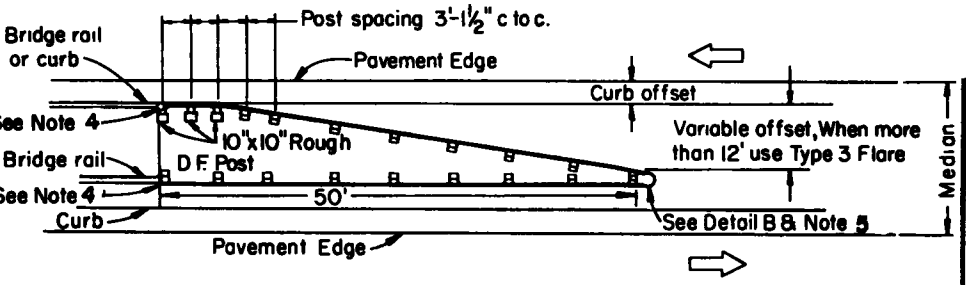

TYPE 4 FLARE

SHEET 6
FLARE DETAILS
BLOCKED OUT "W" BEAM

Date JUNE 68 **Rev**
Developed by California

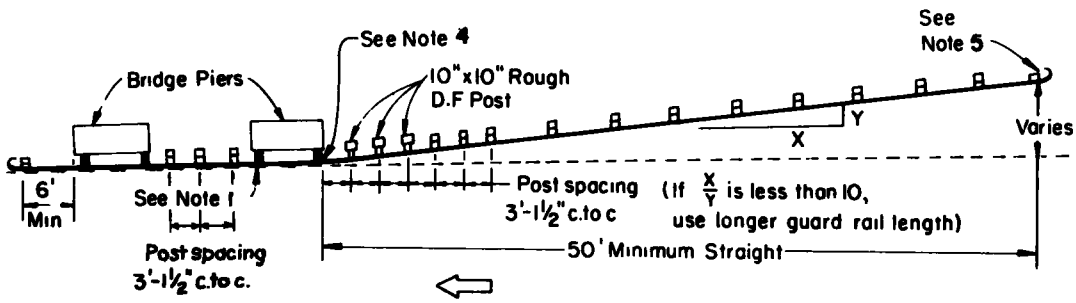

Use where obstruction is less than 18' from edge of pavement.

TYPE 11 FLARE

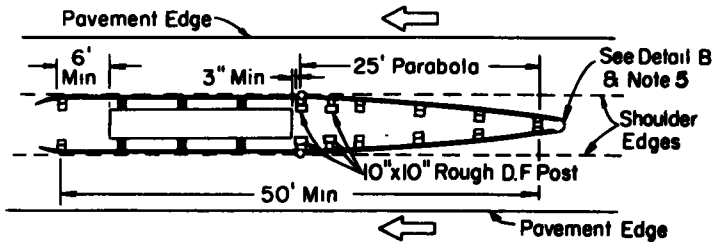

TYPE 10 FLARE

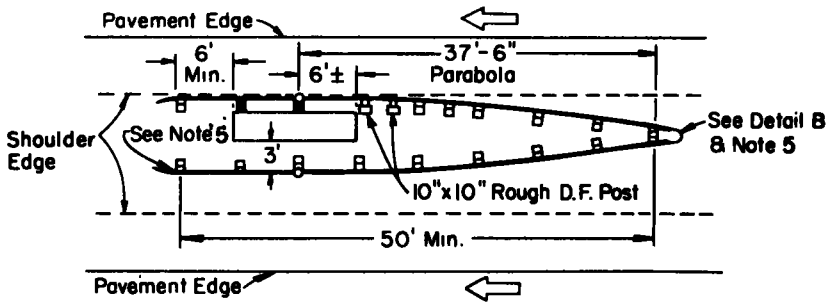

TYPE 9 FLARE

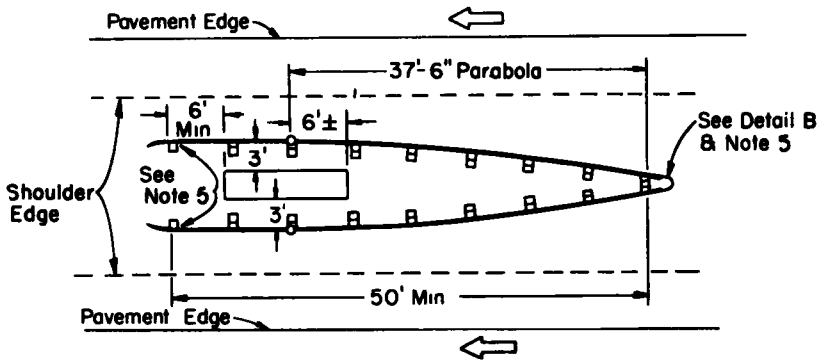

TYPE 8 FLARE

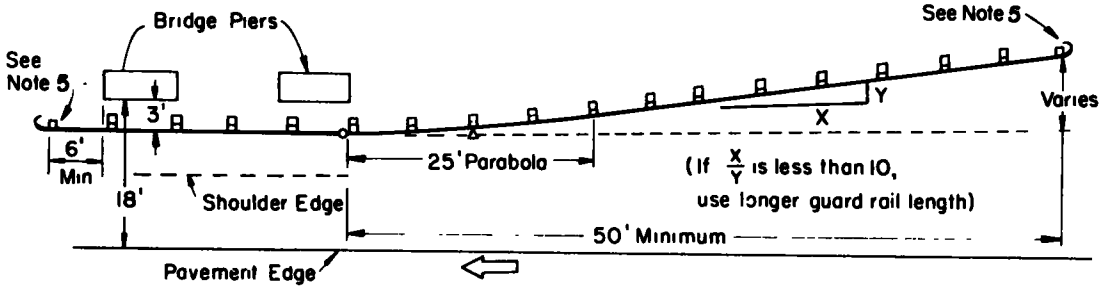

Use where obstruction is at least 18' from edge of pavement.

TYPE 12 FLARE

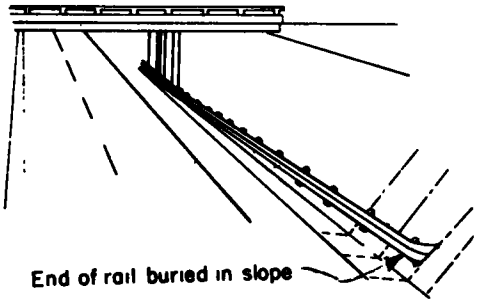

GUARDRAIL IN CUT

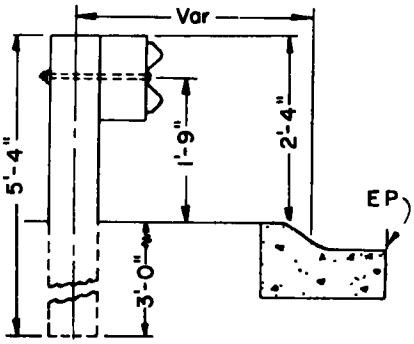

GUARDRAIL AT CURB

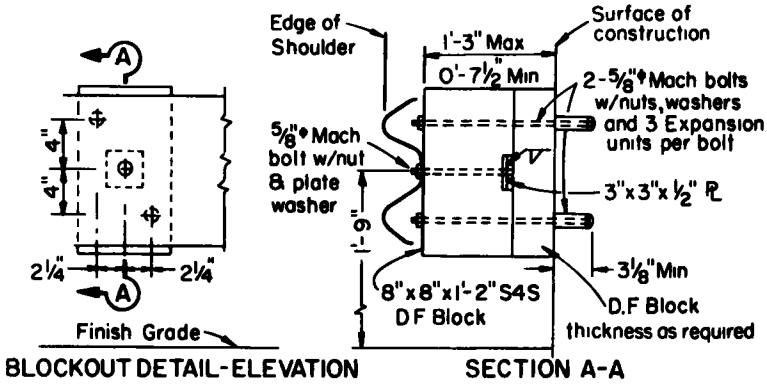

BLOCKOUT DETAIL-ELEVATION SECTION A-A

METAL BEAM RAIL OBSTRUCTION DETAIL A

GENERAL NOTES

1. Use timber shims without posts where rail to pier clearance is less than 15" (See Detail A, Sheet 7).
2. On median installations where pier footing is between 2' and 3' below surface, posts may be embedded a minimum of 2'. Use Detail A when footing is less than 2' below surface.
3. Direction of traffic is indicated by arrow.
4. For connection details see Sheet 6 Blocked-Out "W" Beam Details.
5. For cable anchor details see Sheet 5, Blocked-Out "W" Beam Details.

SHEET 7
FLARE DETAILS
BLOCKED OUT "W" BEAM
Date JUNE 68 **Rev**
Developed by California

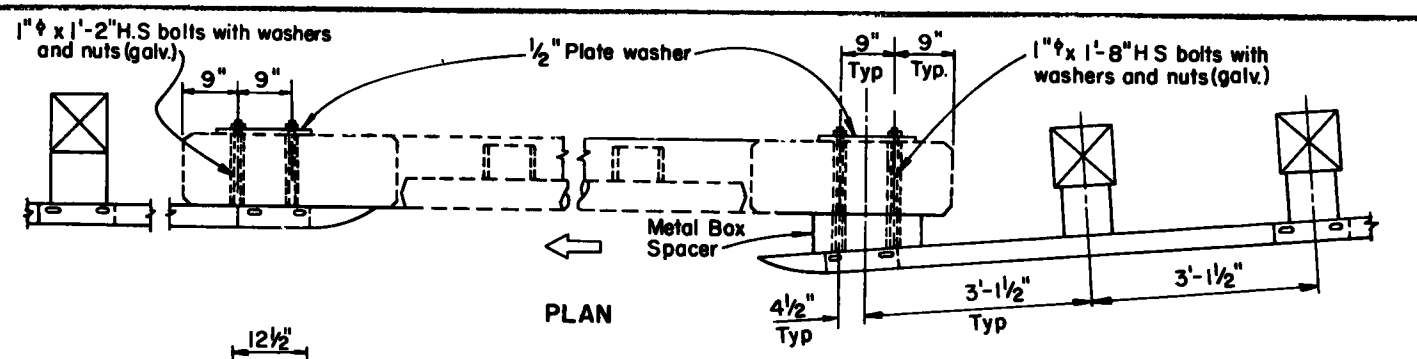

PLAN

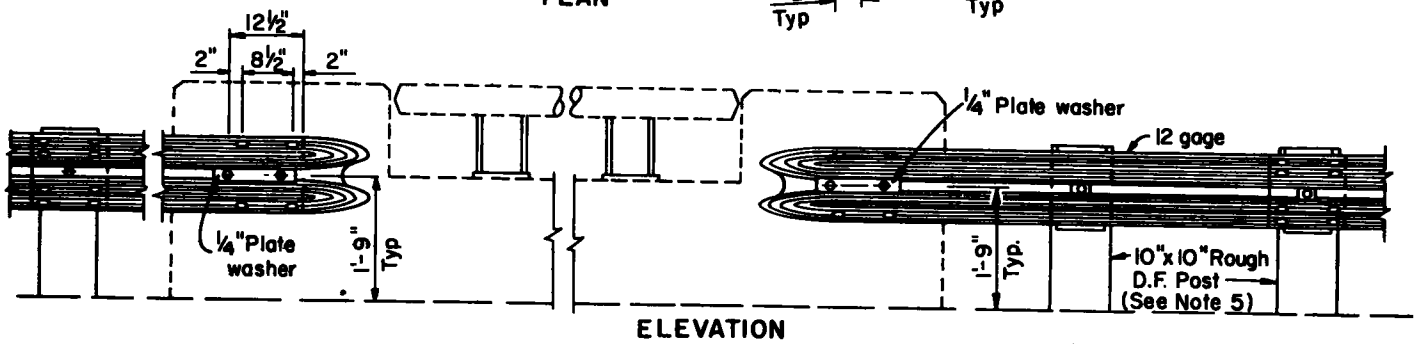

ELEVATION

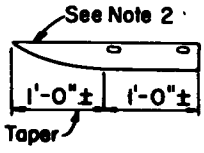

PLAN

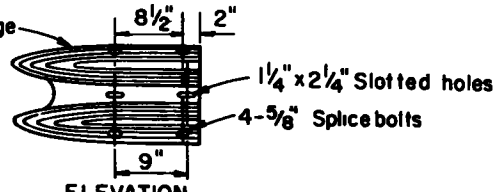

ELEVATION

END SECTION DETAILS

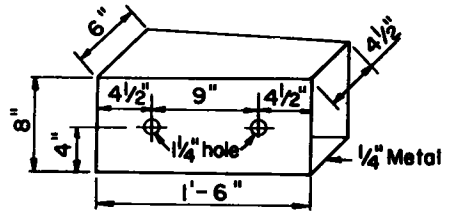

METAL BOX SPACER (See Note 6

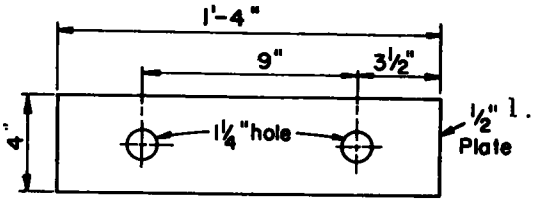

PLATE WASHER
FOR BACKSIDE OF PARAPET

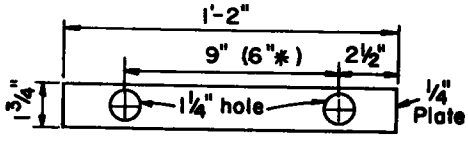

PLATE WASHER
FOR GUARD RAIL

* 6" Spacing to be used where Detail "A" conditions are encountered.

GENERAL NOTES

1. These connection details apply to bridge rails, abutments, piers, retaining walls and other flat surface concrete objects.
2. End sections may be cut from standard terminal sections or fabricated.
3. Direction of traffic indicated by ⇦
4. For post size and spacing See Type 1 Flare on Sheet 6.
5. When metal box spacer is installed, place 1-1/4" x 5" and 1-1/4" x 4" pipe spacers on 1" bolts passing through interior of box.

SHEET 8
CONNECTION DETAILS
BLOCKED OUT "W" BEAM
Date *JUNE 68* **Rev**
Developed by California

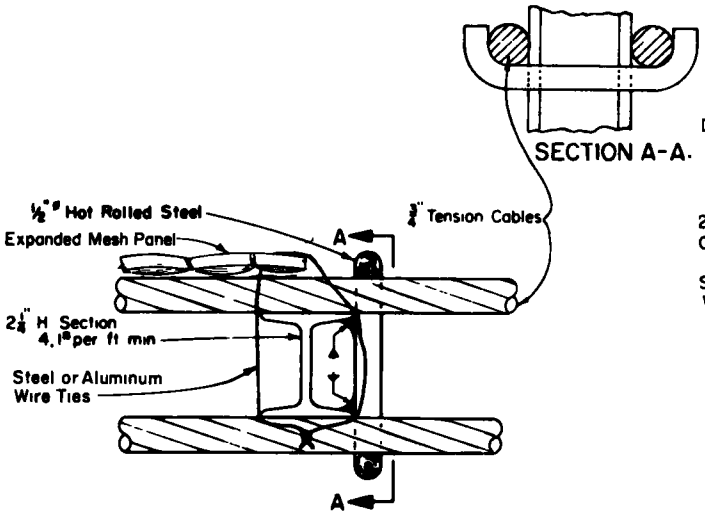

DETAIL A
END POST ASSEMBLY

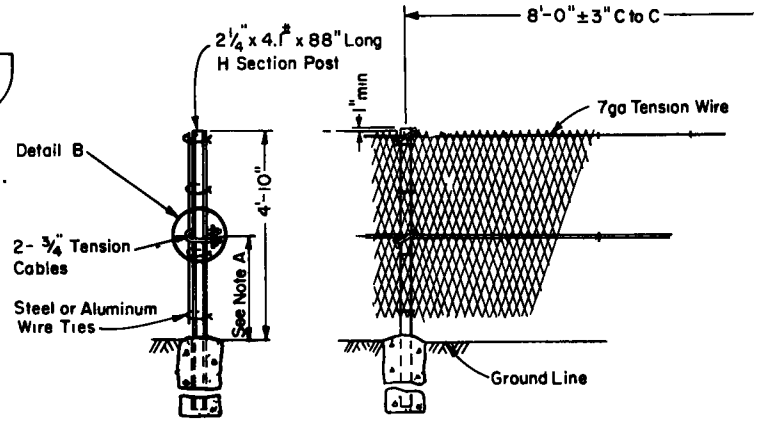

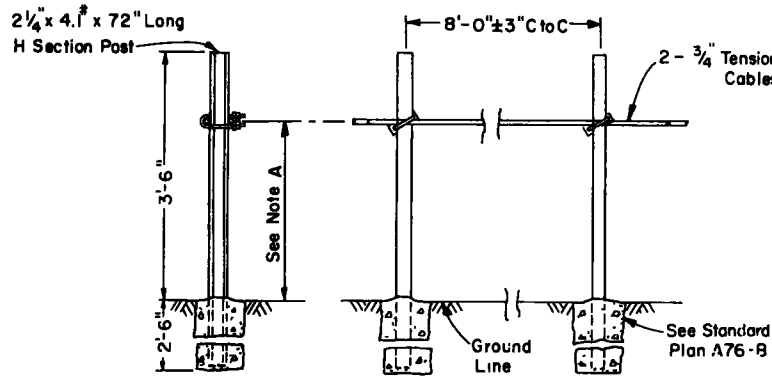

CABLE BARRIER
WITHOUT EXPANDED MESH
HEADLIGHT SCREEN

Note A: Normal height 2'-3" to 2'-4", 2'-6" for special cases where directed by the Engineer

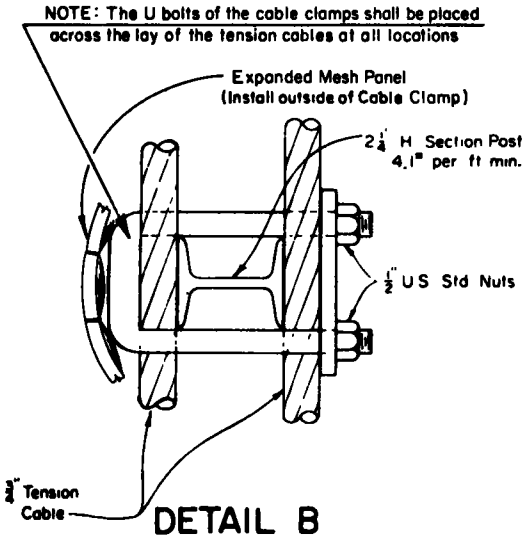

DETAIL B
LINE POST ASSEMBLY

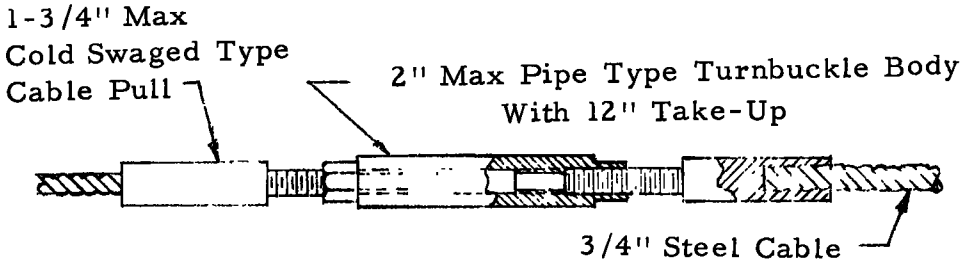

DETAIL C LINE TURNBUCKLE

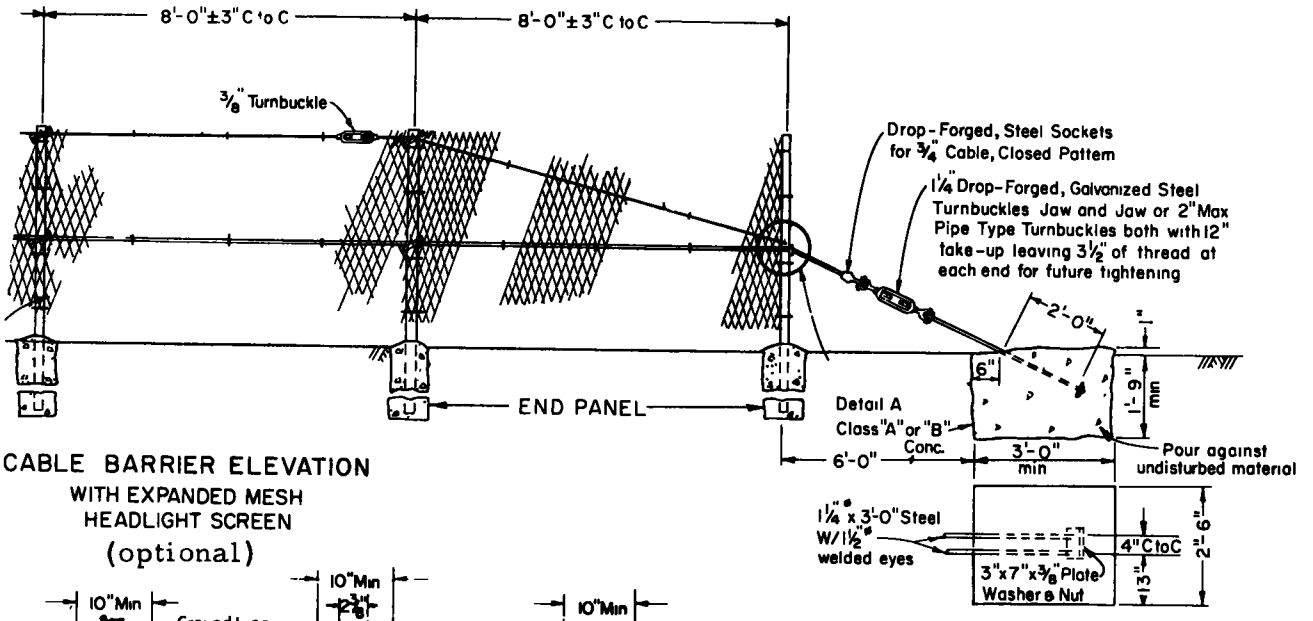

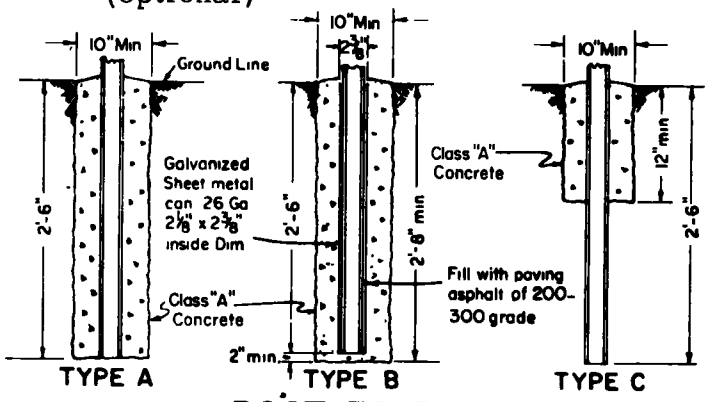

GENERAL NOTES

1. Line turnbuckles (those used in intermediate panels) should be constructed as shown in Detail C. The diameter of the turnbuckle body should be two inches maximum and the breaking strength of the complete unit greater than that of the cable. Two turnbuckles should not occur in the same panel.

2. The tension cables should be placed no more than 30 inches nor less than 27 inches above the ground. When practical, on paved medians the cable height should be maintained as close to 27 inches as possible.

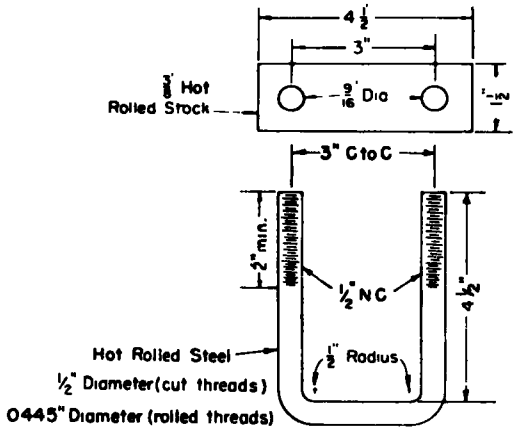

MEDIAN BARRIER

STANDARD MB 1

CABLE

Date *JUNE 68* **Rev**

Developed by California

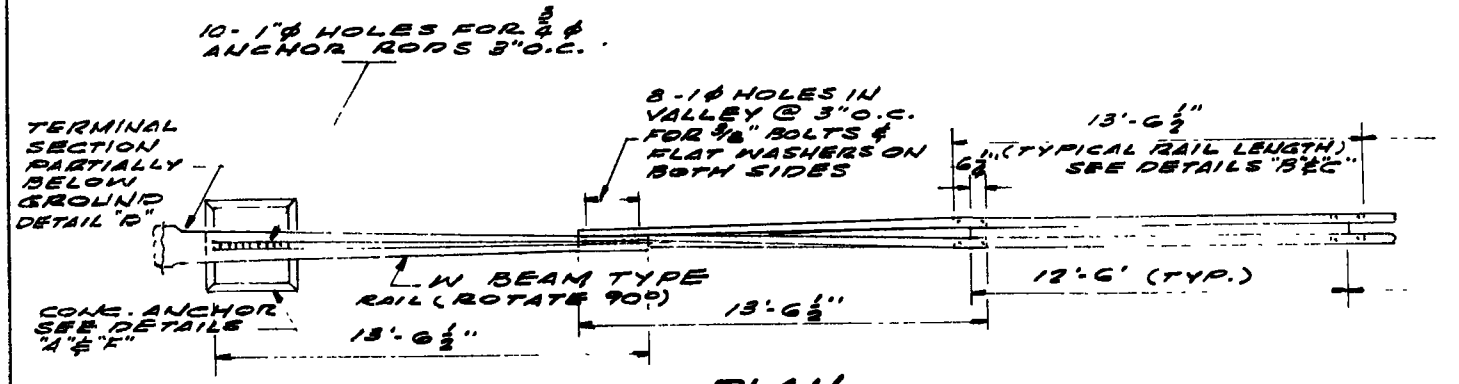

PLAN

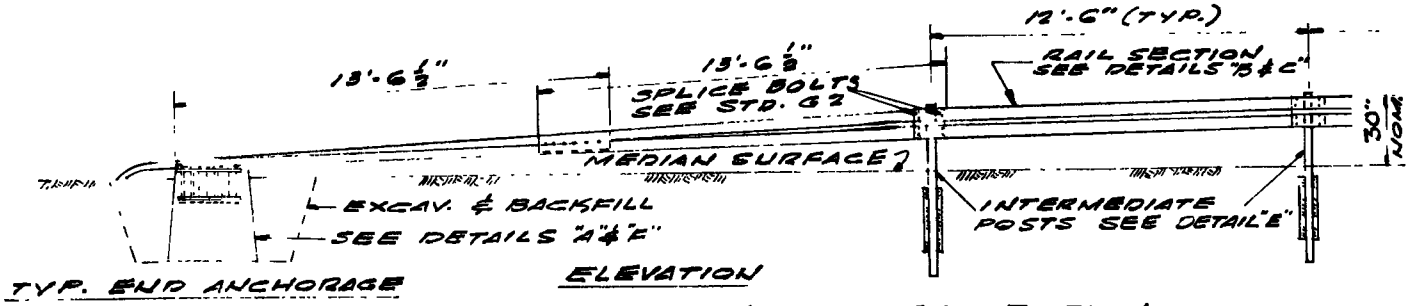

TYP. END ANCHORAGE

ELEVATION

TYPICAL MEDIAN BARRIER SECTION

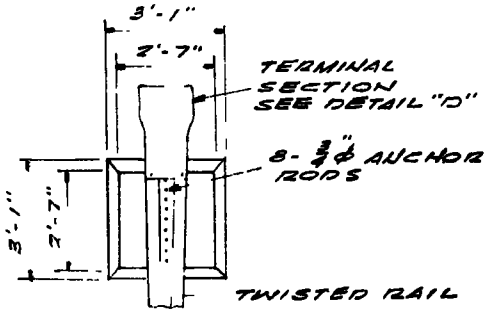

PLAN

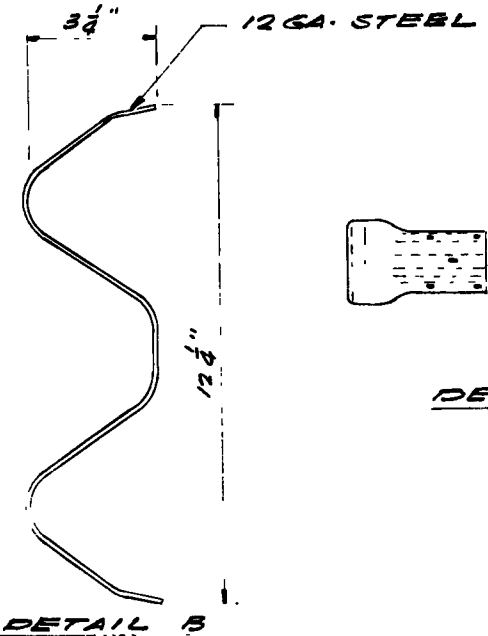

DETAIL B
RAIL ELEMENT

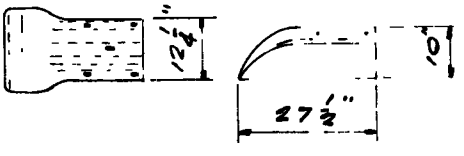

DETAIL D

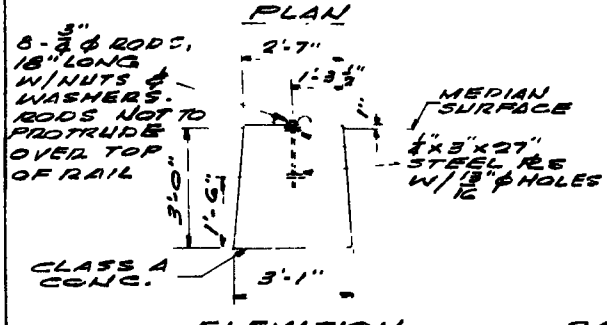

ELEVATION
DETAIL A
CONCRETE ANCHOR

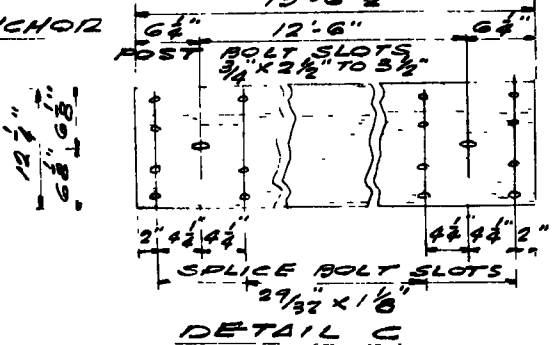

DETAIL C
TYPICAL RAIL SECTION

TABLE A	
CURVATURE DEGREE OR RADIUS	POST SPACING
8° OR LESS	12'-6"
8° TO 26° (220 FT. RADIUS)	12'-6"
219 FT. TO 111 FT.	6'-3"
110 FT. TO 76 FT.	4'-2"
75 FT. TO 50 FT.	3'-1½"
LESS THAN 50 FT.	USE NOT RECOMMENDED

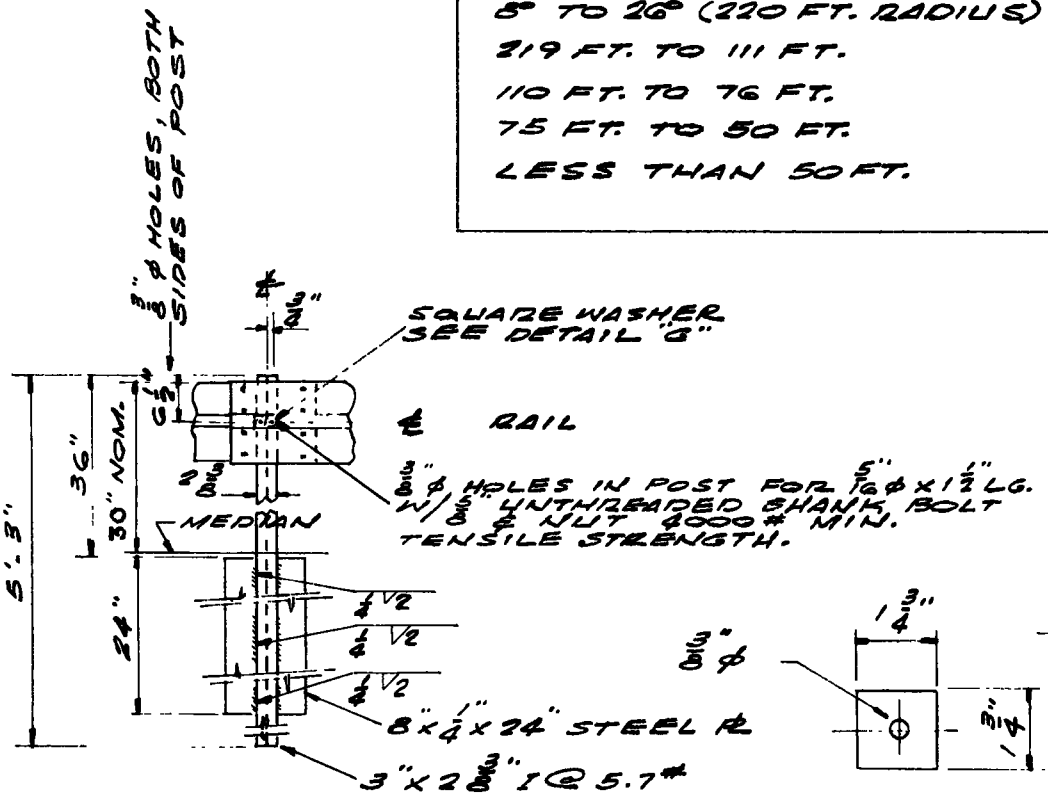

DETAIL E
INTERMEDIATE POST

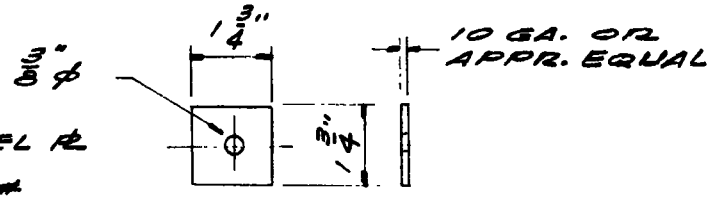

PLACE WASHER IN VALLEY OF BEAM WHEN MOUNTING BEAM TO INTERMEDIATE POST

DETAIL G
SQUARE WASHER

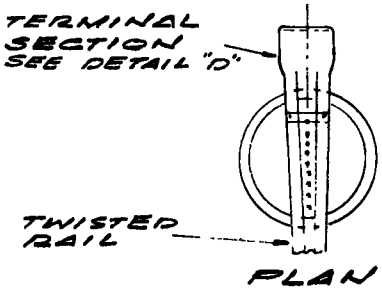

PLAN

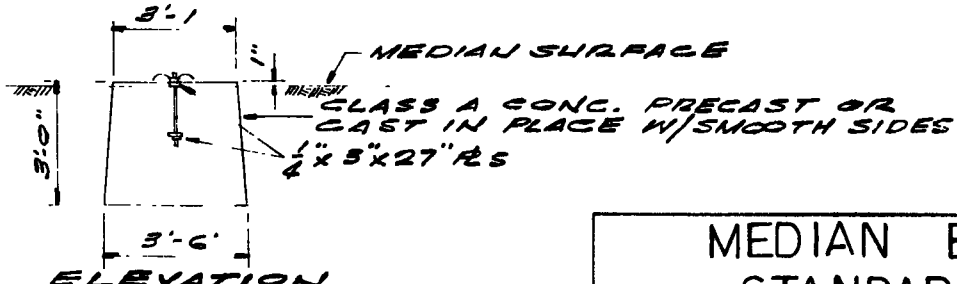

ELEVATION
DETAIL F
ALTERNATE CONC. ANCHOR

MEDIAN BARRIER
STANDARD MB 2
"W" BEAM

DATE JUNE 1968 REV.
DEVELOPED BY NEW YORK

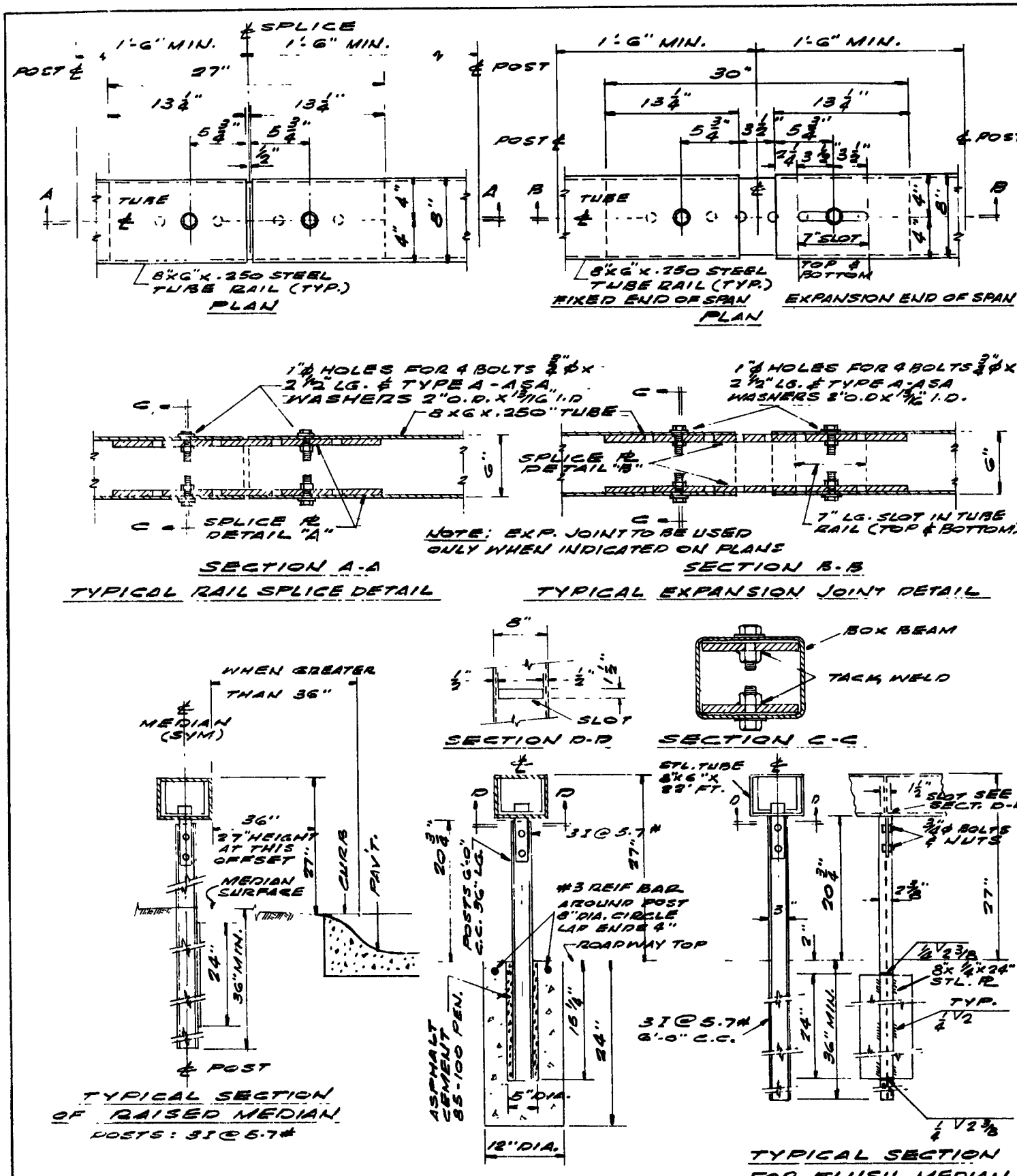
SPLICE
1'-6" MIN.
1'-6" MIN.
POST ℄
27"
13¼"
13¼"
5¾"
5¾"
½"
TUBE
4"
4"
8"
8"x6"x.250 STEEL TUBE RAIL (TYP.)
PLAN
POST ℄
30"
3½"
2¼"
3½"
3½"
7" SLOT
TOP & BOTTOM
FIXED END OF SPAN
EXPANSION END OF SPAN
PLAN
1"ϕ HOLES FOR 4 BOLTS ¾"ϕx 2½" LG. & TYPE A-ASA WASHERS 2"O.D.x13/16" I.D
8x6x.250" TUBE
SPLICE ℄ DETAIL "A"
SECTION A-A
TYPICAL RAIL SPLICE DETAIL
1"ϕ HOLES FOR 4 BOLTS ¾"ϕx 2½" LG. & TYPE A-ASA WASHERS 2"O.D.x13/16" I.D.
SPLICE ℄ DETAIL "B"
7" LG. SLOT IN TUBE RAIL (TOP & BOTTOM)
NOTE: EXP. JOINT TO BE USED ONLY WHEN INDICATED ON PLANS
SECTION B-B
TYPICAL EXPANSION JOINT DETAIL
8"
SLOT
SECTION D-D
BOX BEAM
TACK WELD
SECTION C-C
WHEN GREATER THAN 36"
MEDIAN (SYM)
36"
27" HEIGHT AT THIS OFFSET
MEDIAN SURFACE
CURB
PAV'T.
24"
36" MIN.
POST
TYPICAL SECTION OF RAISED MEDIAN
POSTS: 31@5.7#
POSTS 6'-0" C.C. 36" LG.
31@5.7#
#3 REIF BAR AROUND POST 8" DIA. CIRCLE LAP ENDS 4"
ROADWAY TOP
ASPHALT CEMENT 85-100 PEN.
15¼"
24"
5" DIA.
12" DIA.
ALTERNATE POST ANCHOR FOR PAVED MEDIANS
STL. TUBE 8"x6"x 22' FT.
1½" SLOT SEE SECT. D-D
¾"ϕ BOLTS & NUTS
8"x¼"x24" STL. PL
TYP.
31@5.7# 6'-0" C.C.
36" MIN.
TYPICAL SECTION FOR FLUSH MEDIAN

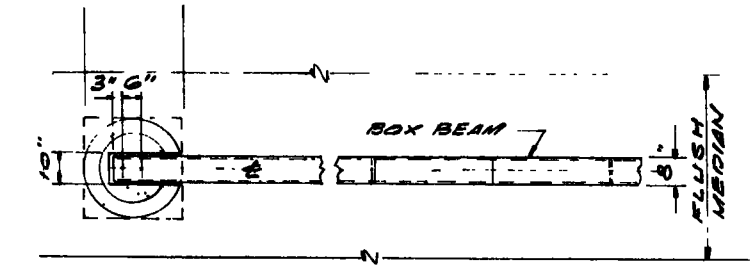

PLAN

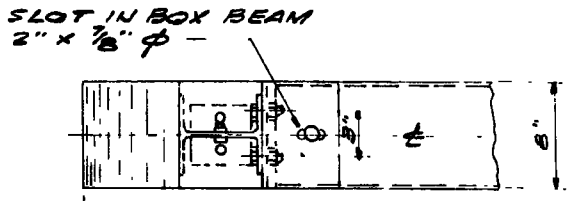

PLAN

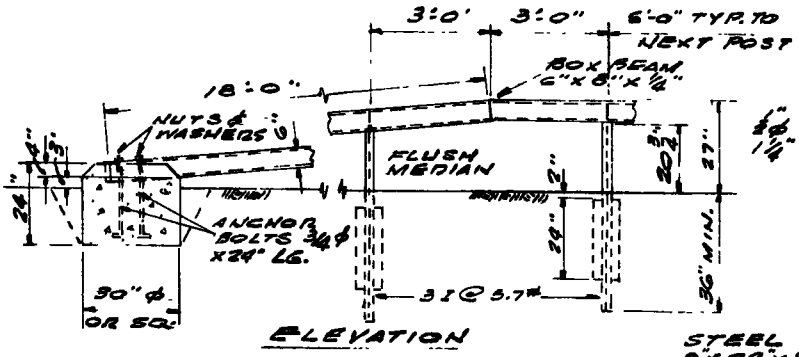

ELEVATION

TYPICAL END TREATMENT TYPE A
NARROW MEDIANS

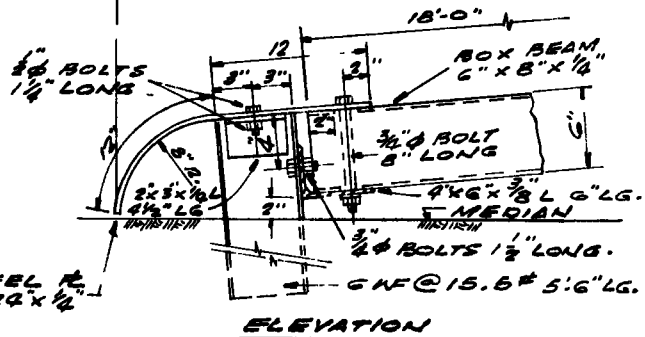

ELEVATION

TYPICAL END TREATMENT TYPE B
WIDE MEDIANS

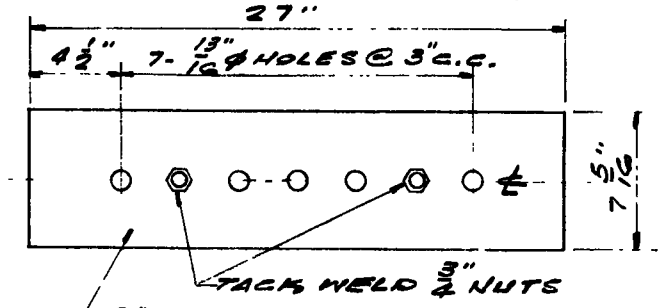

DETAIL A
SPLICE PLATE

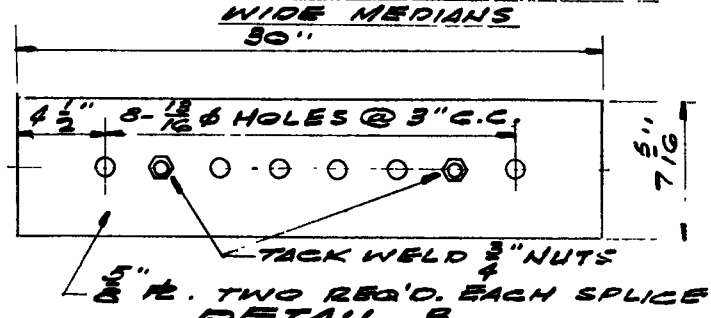

DETAIL B
SPLICE PLATE FOR
EXPANSION JOINT

MB 3 GENERAL NOTES:

1. MIN. LENGTH OF RAIL TUBE TO BE 18' NOM.
2. RAIL ALIGNMENT TO BE STRAIGHT AT SPLICES. NO LATERAL BEND PERMITTED WITHIN THE SPLICE. THIS DOES NOT PRECLUDE THE SHOP FABRICATION OF BENT SPLICES.
3. CURVED MEDIAN BARRIER - FOR CURVES GREATER THAN 3°-15' - BOX BEAM SHALL BE SHOP WORKED TO THE REQUIRED CURVATURE.

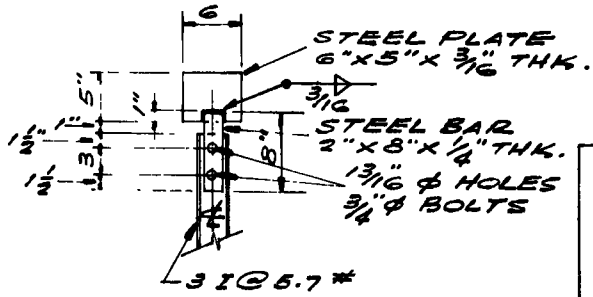

TOP OF POST DETAIL

MEDIAN BARRIER
STANDARD MB 3
BOX BEAM

DATE JUNE 1968 REV. _____
DEVELOPED BY NEW YORK

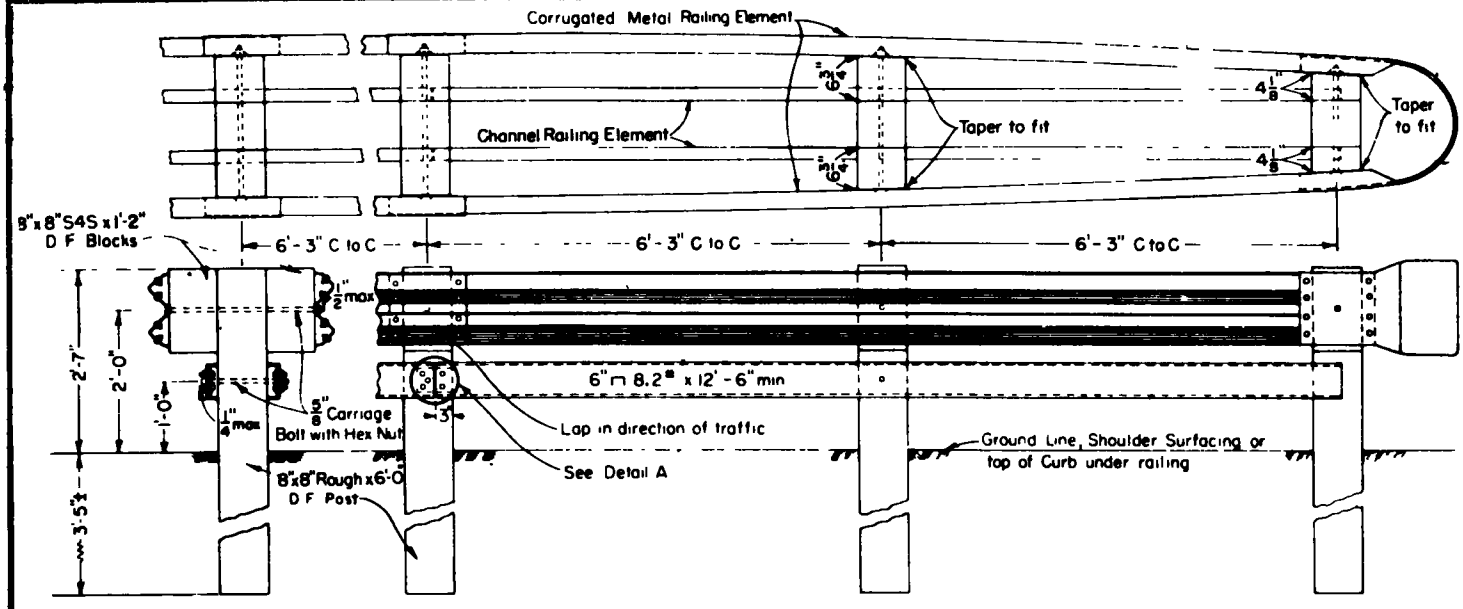

All nuts shown to be hex and placed on outside except rail splice bolts

DOUBLE METAL BEAM BARRIER

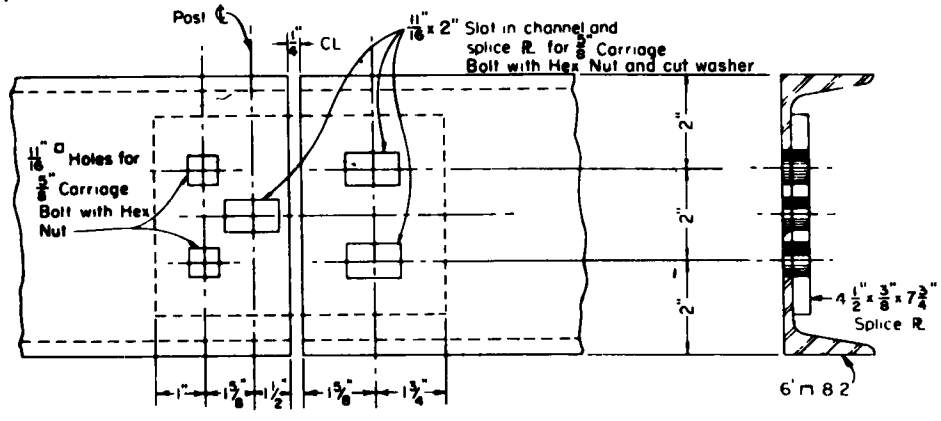

DETAIL "A" OF BOTTOM RAIL SPLICE

(Rail Splices to occur at Posts only)

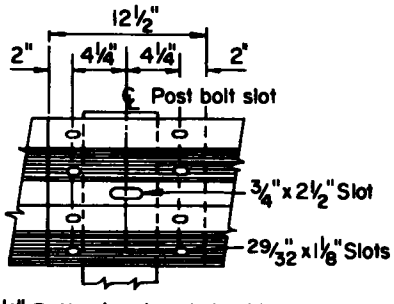

5/8" x 1 1/4" Button head oval shoulder bolts with 1 1/4" recessed hex. nuts - Total: 8 per splice and 4 per terminal section

RAIL SPLICE

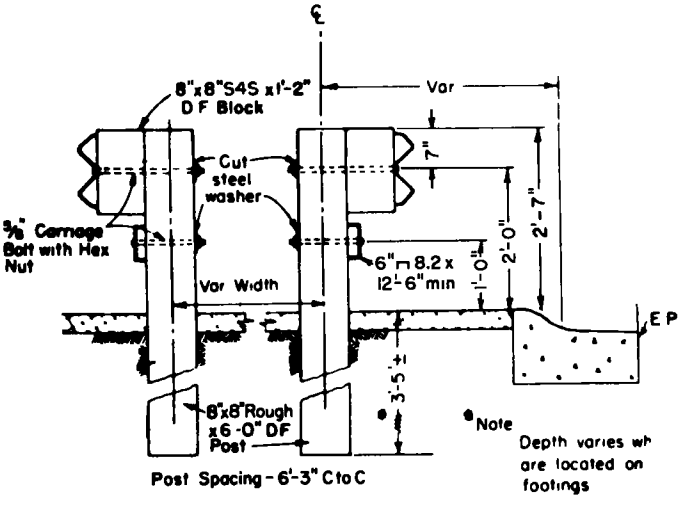

SINGLE METAL BEAM BARRIER

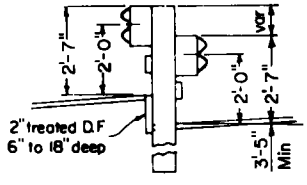

SAW TOOTH INSTALLATIONS.

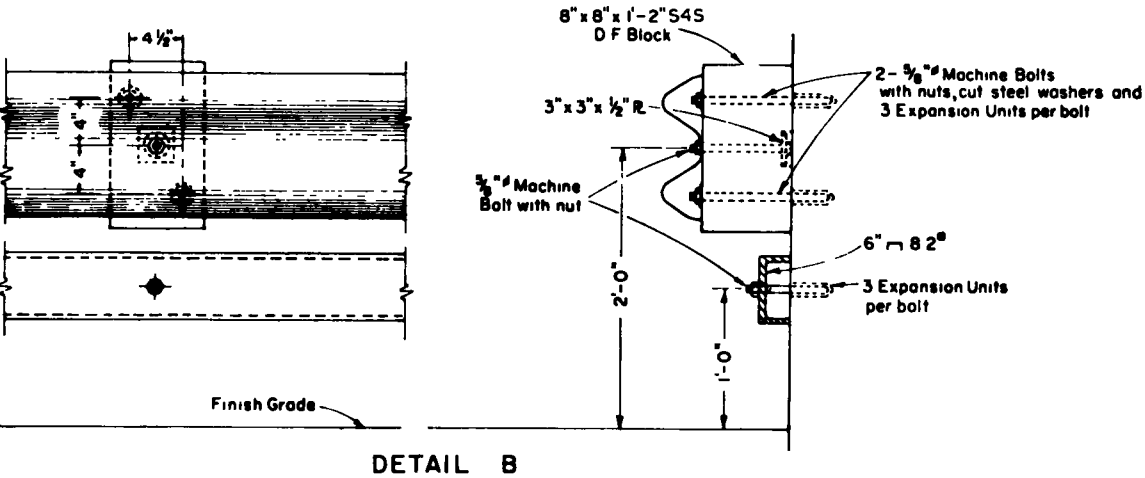

DETAIL B
(Used only when necessary)

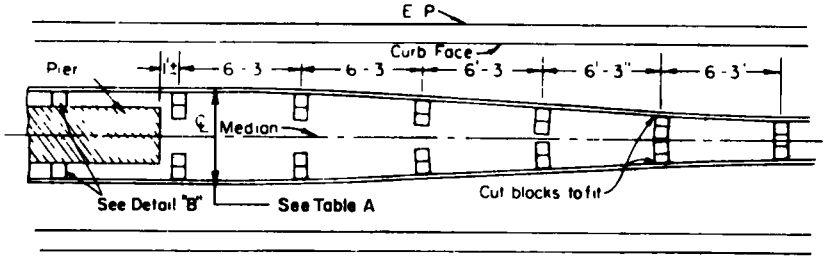

METAL BEAM BARRIER OBSTRUCTION DEFLECTOR
PLAN AT BRIDGE PIERS OR MEDIAN OBSTRUCTIONS

TABLE A

Median Width Ft	Deflector Width - Ft
22	6
23	7
24	8
25	9
26 and over	10

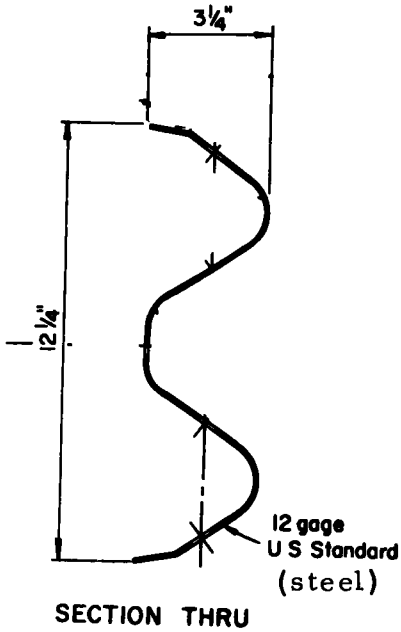

SECTION THRU
RAIL ELEMENT

GENERAL NOTES

1. Except where noted, cut washers are required at all bolt installations where nut would bear on wood.
2. See Sheet 5 for Anchorage Details.
3. See Sheets 6 and 7 for Flare Details.
4. See Sheet 8 for Connection Details.

MEDIAN BARRIER
STANDARD MB 4
BLOCKED OUT "W" BEAM

Date JUNE 68 Rev
Developed by California

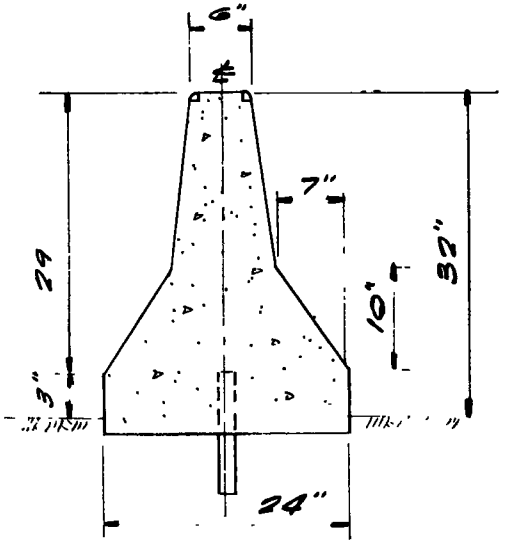

BARRIER MB 5

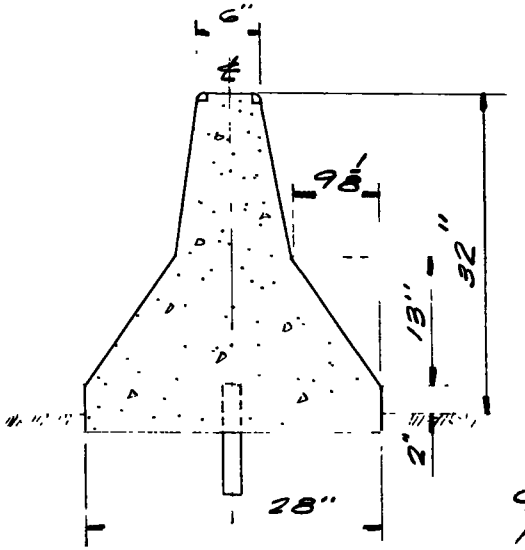

BARRIER MB 6

GENERAL NOTES

1. CONCRETE SHALL BE CLASS B (AASHO)
2. DOWELS 1" ϕ x 8" LONG SHALL BE USED IF BARRIER IS PLACED ON EXISTING PAVED MEDIAN. (4'-0" C.C. SPACING)
3. TRANSVERSE JOINTS ARE RECOMMENDED AT 20-FT INTERVALS

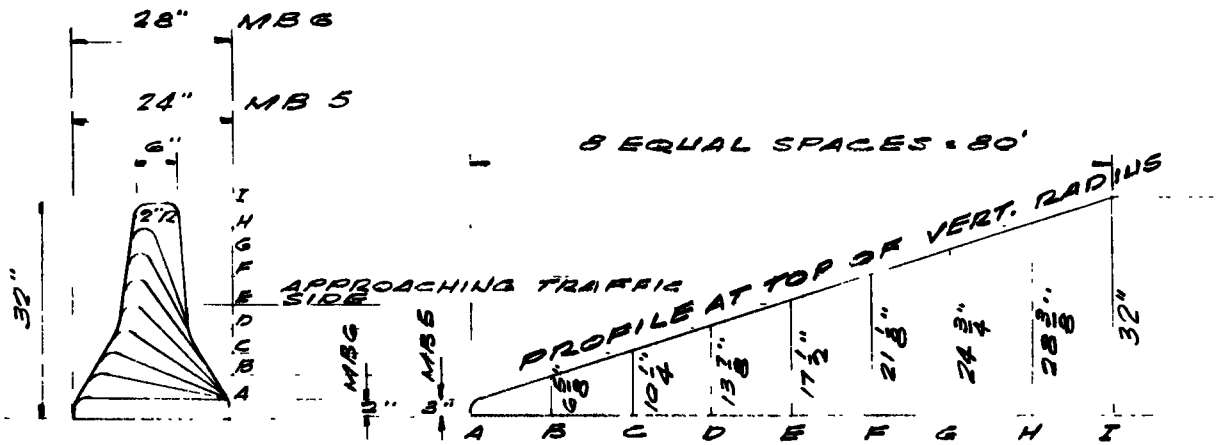

DETAIL SHOWING TRANSITION AT END OF INSTALLATION

MEDIAN BARRIERS
STANDARDS MB 5 - MB 6
CONCRETE

DATE JUNE 1968 REV.

MB 5 DEVELOPED BY NEW JERSEY
MB 6 DEVELOPED BY GENERAL MOTORS

APPENDIX B

INSTALLATION LAYOUT DETAILS

Layout details and recommendations are presented in this appendix. They represent state-of-the-art engineering judgment and highway experience. This information supplements the design details included in the standards of Appendix A.

Installation Length

Installations should be extended upstream from warranted limits to prevent vehicle access behind the protective system. Short sections should be avoided as they are often more hazardous than none. Isolated sections of unanchored guardrail should not be less than 100 ft long. To eliminate short lengths, flattening of critical portions of embankment should be considered (Fig. B-1). Short gaps between installations should be avoided. Ends of guardrail should be anchored in accordance with the standards of Appendix A.

Transition Between Systems

Transition from one type to another should be smooth, with a graduated stiffness. Flexible systems should not be directly connected to rigid systems. A length of semirigid section with graduated post spacing will produce an effective stiffness transition. Recommended transitions are shown in Appendix A.

Shoulder Requirements

AASHO recommends increasing overall shoulder width by 2 ft on fills where guardrails are necessary. Ideally, any curb should be put in the preferred position behind the installation. If the curb must be in front of the installation, the curb should be of the low mountable type.

Uniform Clearance

As shown in Figure B-2, a desirable feature of highway design is its uniform clearance to all roadside elements. These basic elements—parapet, retaining wall, abutment, guardrail—should be in line to prevent vehicle snagging. Shoulder width should be constant whether the highway is in cut, on fill, or on structure.

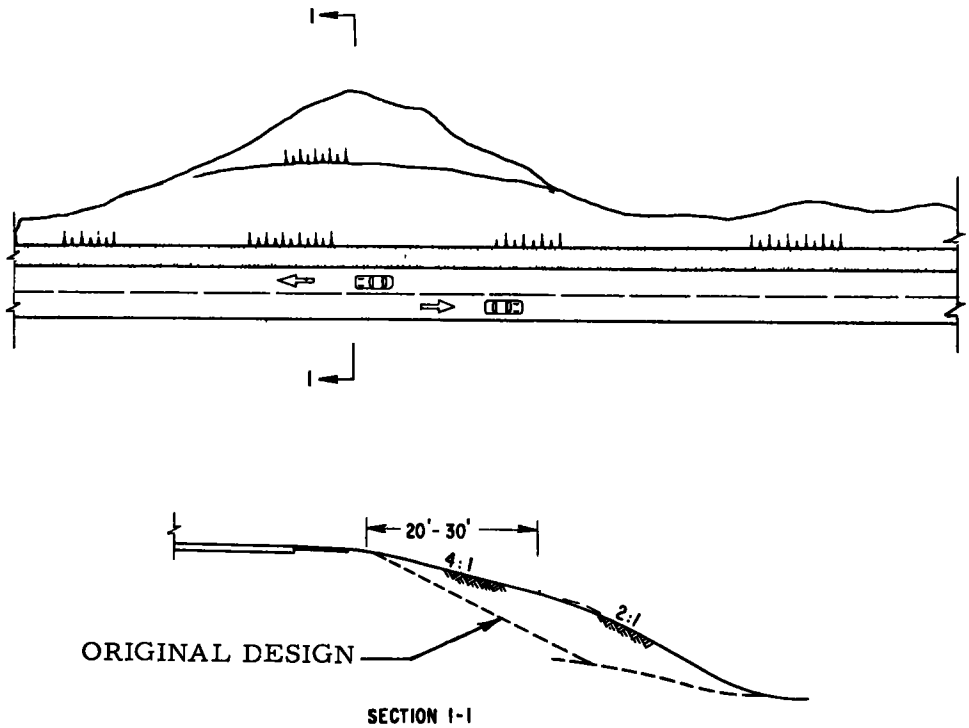

Figure B-1. Elimination of shoulder guardrail by partial flattening of fill slope.

Guardrail Layout on Fill and Fill-to-Cut Sections

The recommended layout of a guardrail on fill is shown in Figure B-3b. The layout shown in Figure B-3a is inadequate because the guardrail is too short and has improper end treatment.

The recommended layout of a guardrail on a fill-to-cut section is shown in Figure B-4b, an example of recom-

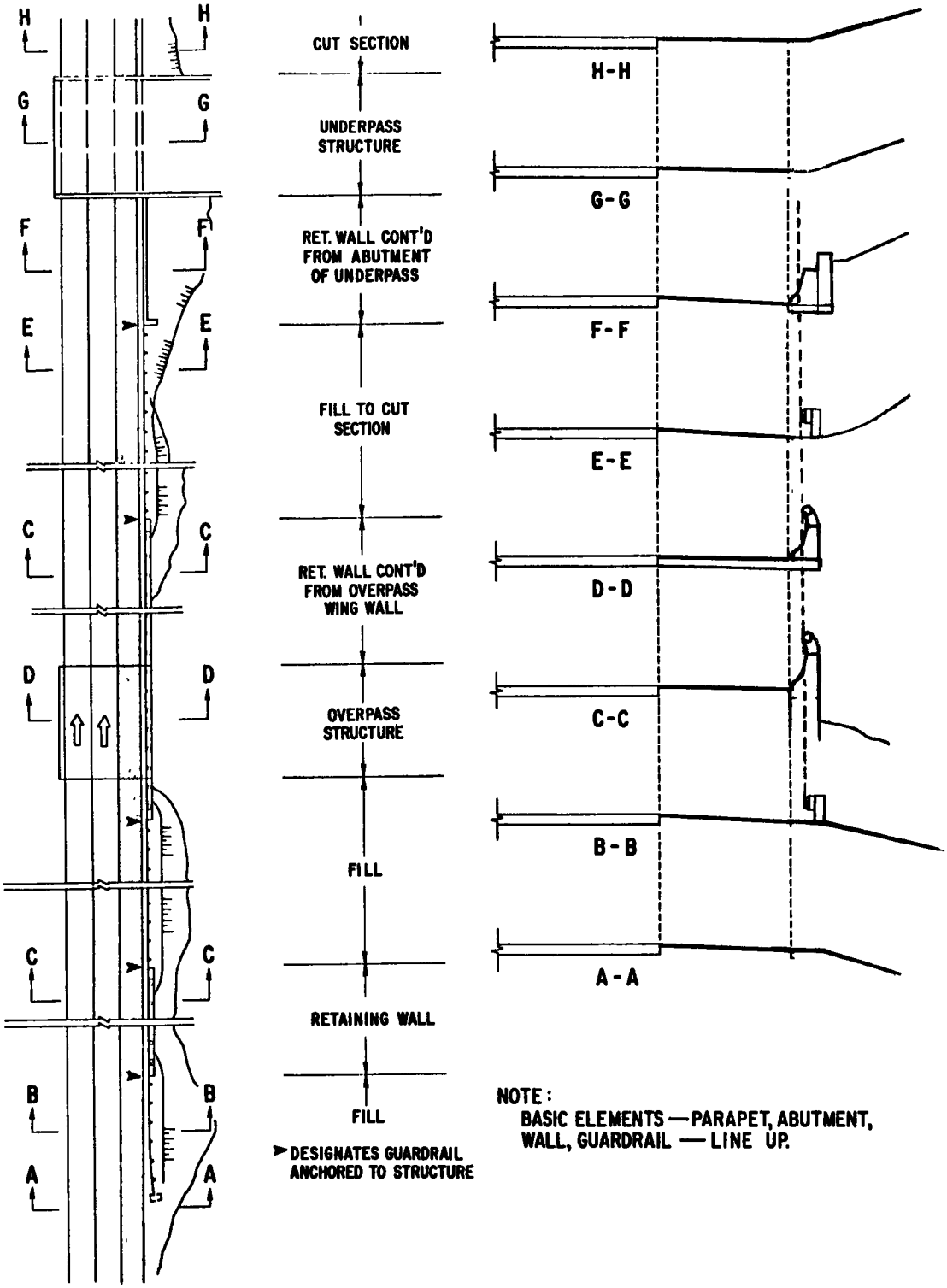

Figure B-2. Uniform shoulder treatment and uniform clearance to roadside elements.

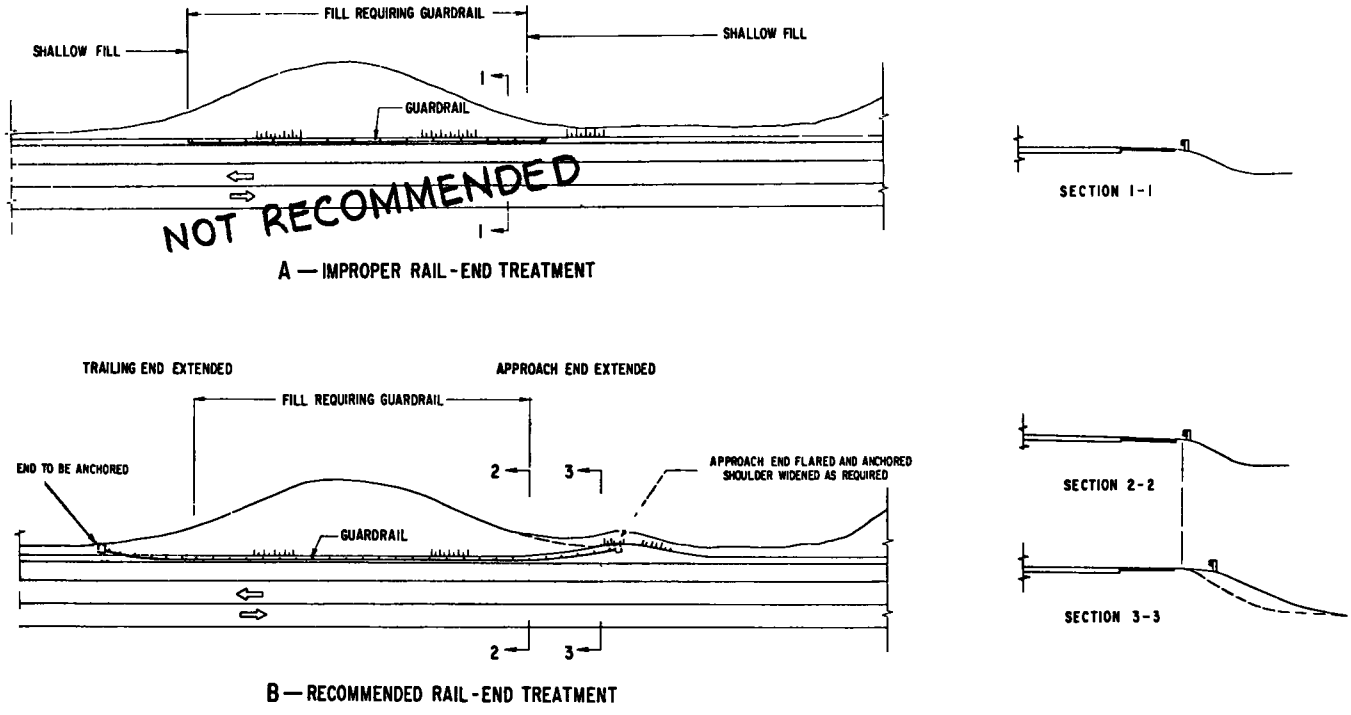

Figure B-3. Guardrail terminal treatment for roadside fill condition.

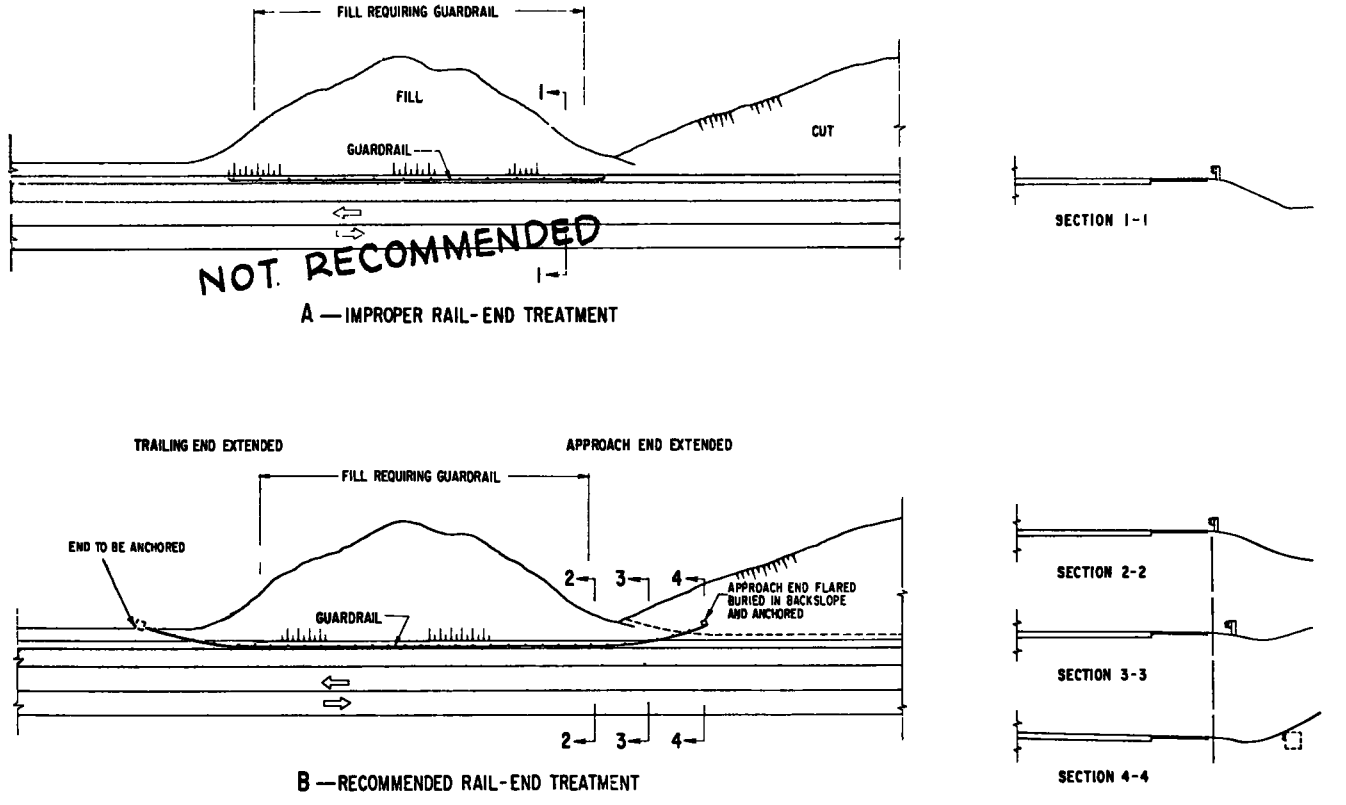

Figure B-4. Guardrail terminal treatment for roadside fill-to-cut condition.

mended end treatment of guardrails. The layout shown in Figure B-4a is inadequate because the guardrail is too short and has improper end treatment.

General Treatment at Structures

The installation should be attached to the structure so that adequate strength of the system is developed. Recommended methods are shown in the standards (Appendix A). Roadway narrowing transition should be gradual—15 to 20 ft longitudinally per foot of width reduction. To effect a smooth transition in rigidity, the post spacing should be graduated from the structure end, as shown in the standards.

Center Treatment at Overpasses

Recommended treatments in the median at overpasses are illustrated in the standards (Appendix A). Consideration should be given to widening the bridge decks to close the opening between twin bridges.

Center Treatment at Underpasses

Recommended treatments at underpasses are depicted in the standards. A recommended treatment for concrete median barrier at underpass piers is shown in Figure B-5.

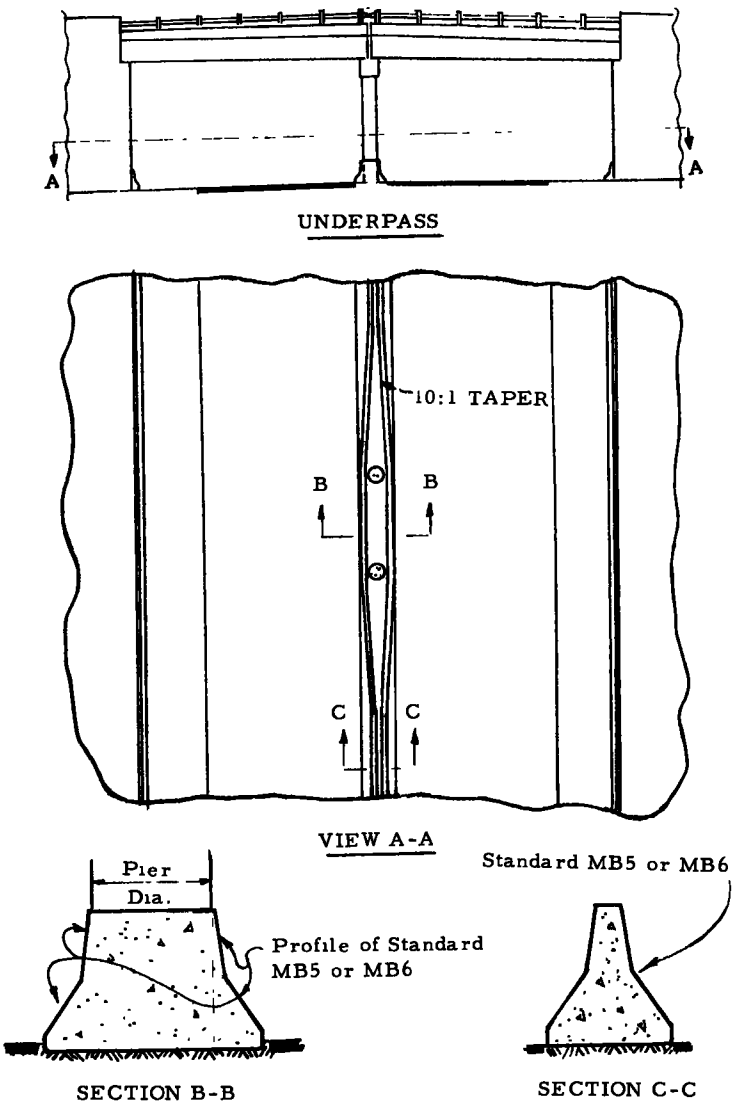

Figure B-5. Example of concrete median barrier treatment at underpass piers.

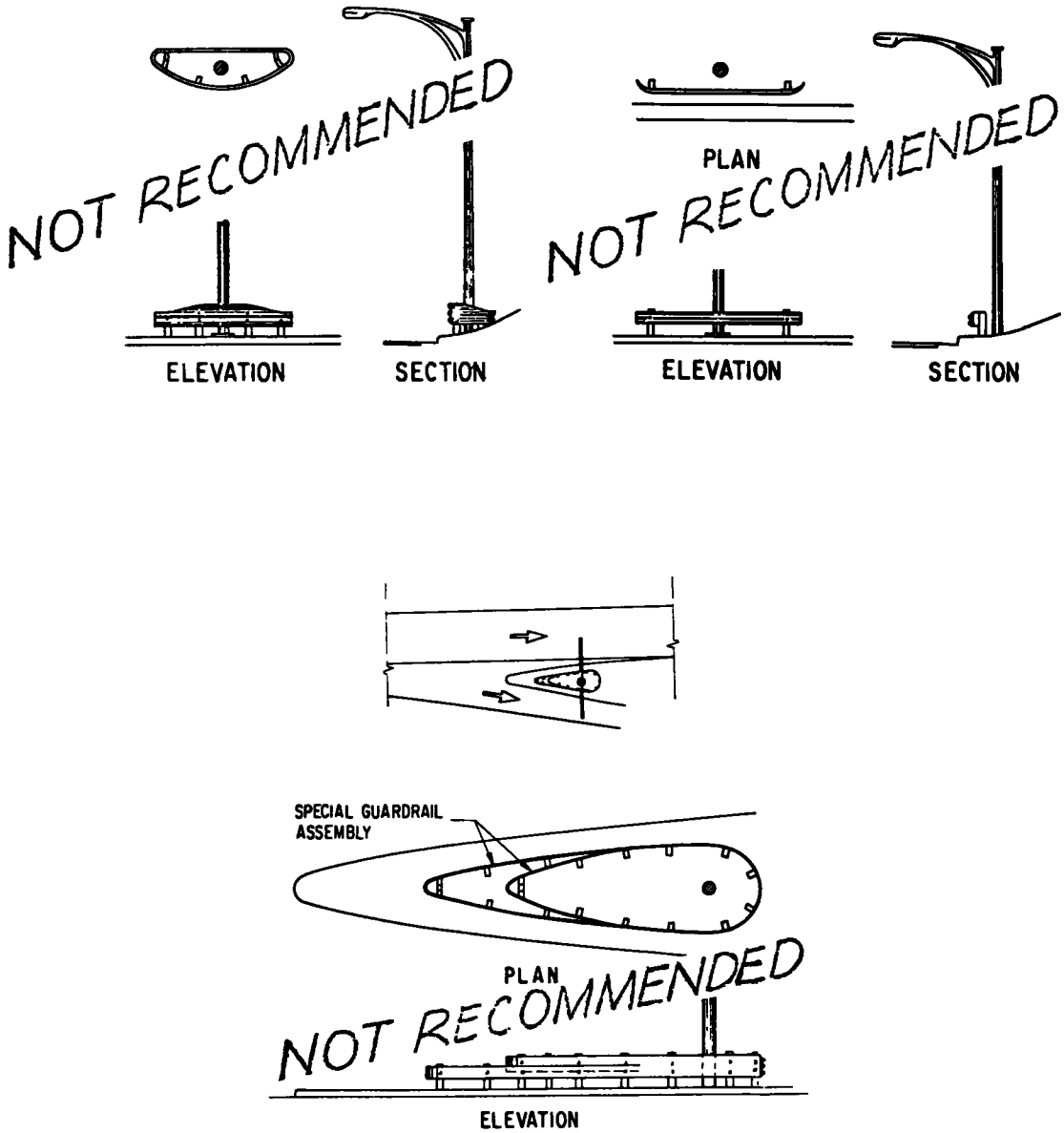

Figure B-6. Examples of poor practice.

Treatment at Highway Appurtenances

Short installations around light standards, signs, and gore areas, as shown in Figure B-6, are not recommended because they increase accident frequency, seldom decrease accident severity, and frequently cost more than modification or relocation of the appurtenance. Serious consideration should be given to relocating the appurtenance or utilizing breakaway construction with no barrier. For large signs, bridge abutments, large trees, and other roadside obstacles, examples are shown in Appendix A.

Several techniques for using a standard concrete barrier profile are shown in Figure B-7. The profile can be incorporated in the base of a retaining wall or at a rough rock cut. A concrete parapet (with standard profile) providing a transition into a bridge rail is shown in Figure B-7c.

Barriers in Stepped Medians

Full-scale tests show that the height of the rail or cable is critical. The barrier type and its location in a stepped median are determined by considering vehicle trajectory. When a median slope is flatter than 3:1 and/or height is less than 6 in., as shown in Figure B-8a, any barrier type satisfying the deflection criteria can be used if it is placed at the higher shoulder hinge point, as shown. If these slope or height conditions are exceeded, use the blocked-out

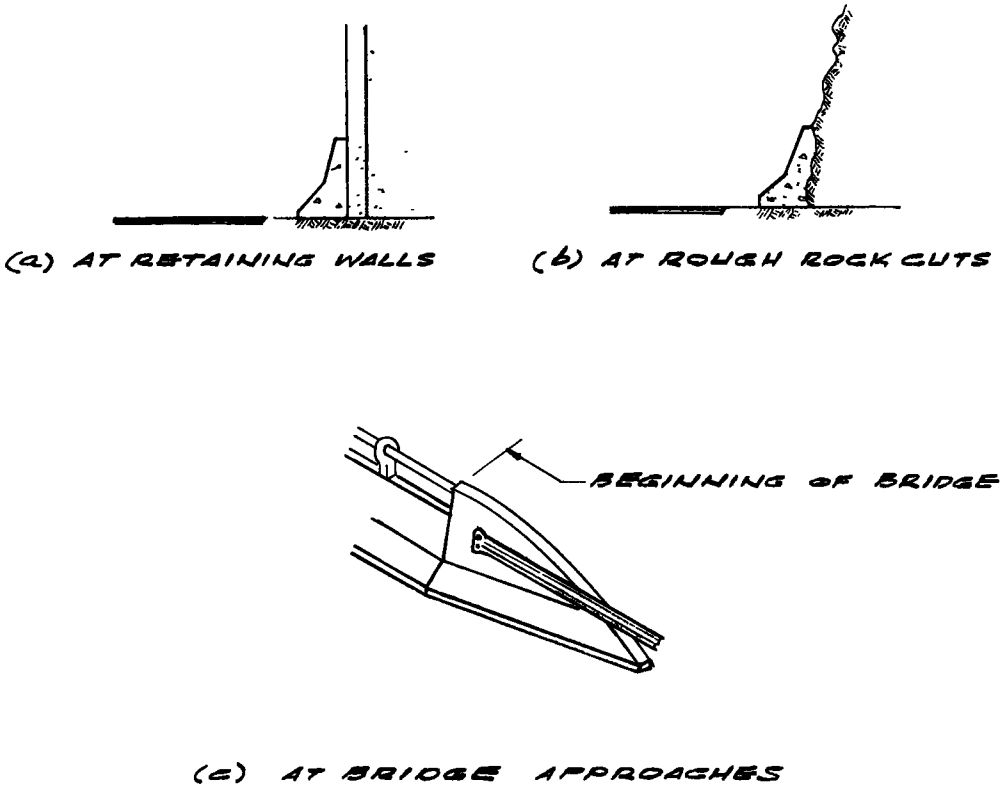

Figure B-7. Examples of concrete guardrail applications.

W-beam barrier (Standard MB4) shown in Figure B-8b or a double row of guardrail at the hinge points as shown in Figure B-8c. If a narrow median is stepped, a concrete median barrier can be used, as shown in Figure B-8 d. If a barrier location is desired other than at the upper shoulder hinge point, the barrier type and location are also determined by vehicle trajectory as shown in Figures B-9 and B-10. Plotted vehicle trajectories are depicted in Figure B-11.

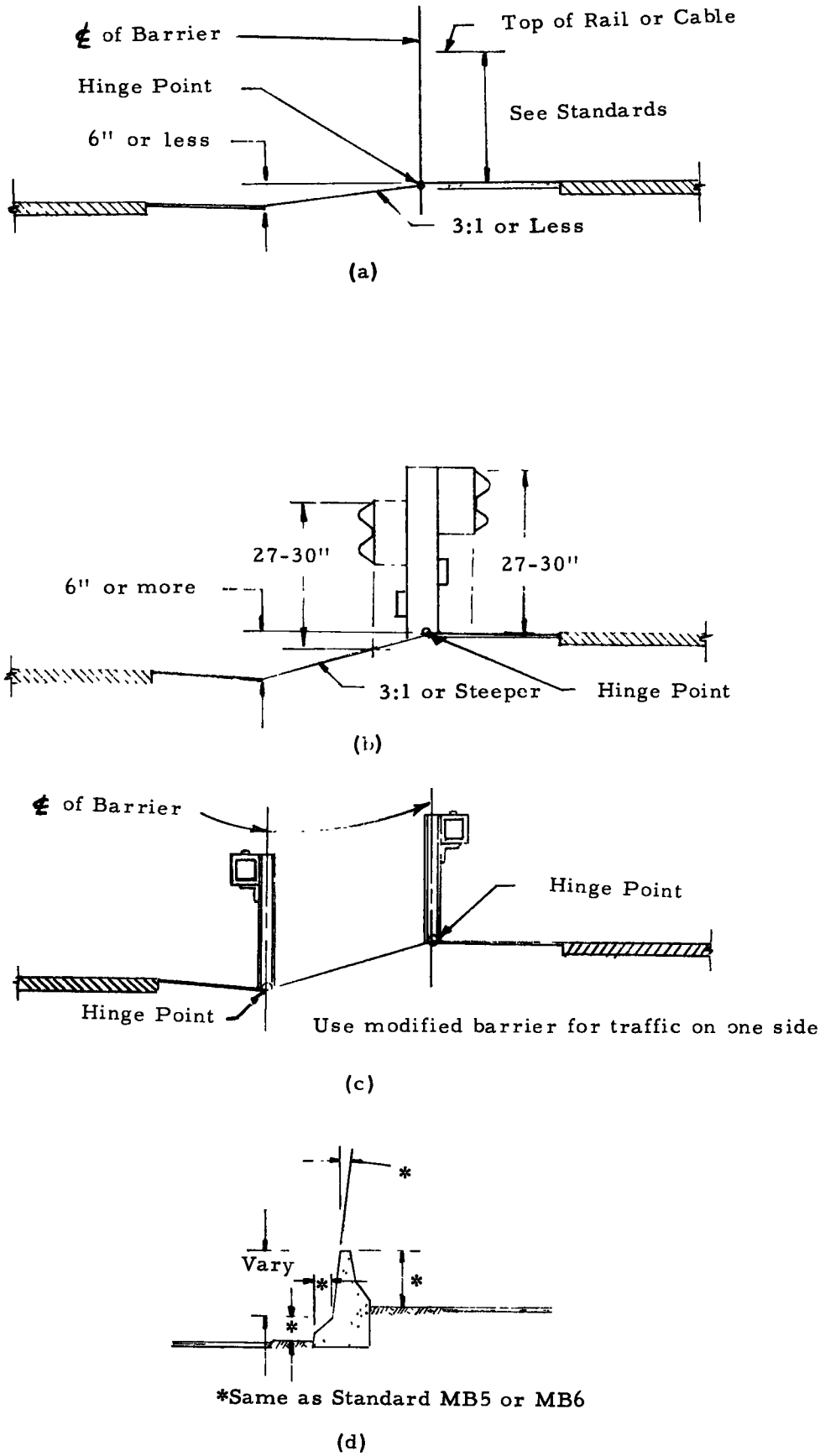

Figure B-8. Barriers for stepped medians.

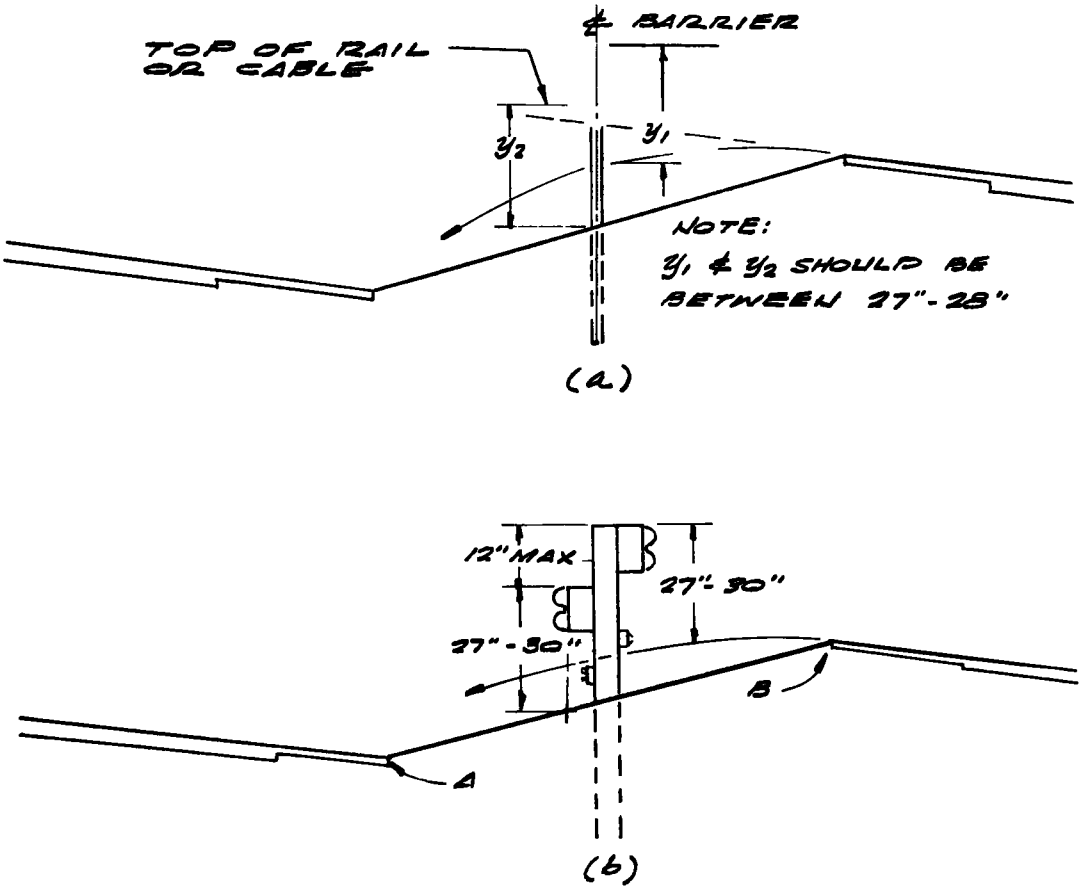

Figure B-9. Median barrier vehicle trajectory considerations.

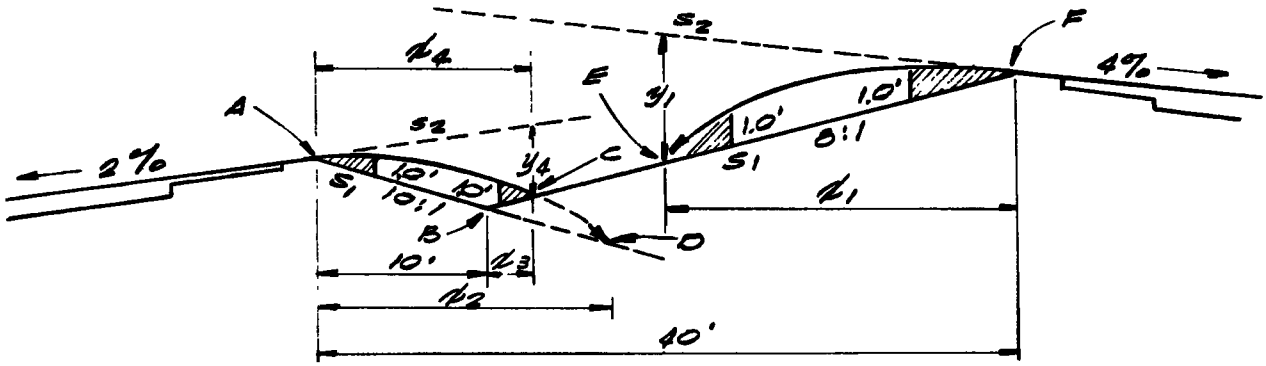

$y = 1/2at^2 = 16.1t^2$

$t = x/44$ ft/sec (based on 30° angle of attack at 60 mph)

Substituting,

$$y = 0.0083\,x^2 \qquad \text{(Eq. A)}$$

Also,

$$y = x(S_1 - S_2) \qquad \text{(Eq. B)}$$

Substituting, $x(S_1 - S_2) = 0.0083\,x^2$

Therefore,

$$x = (S_1 - S_2)/0.0083 \qquad \text{(Eq. C)}$$

STEP 1. Determine where in the median the trajectory from the right roadway intercepts the ground.

Using Eq. C, $x_1 = [0.125 - (-0.04)]/0.0083$
$= 19.8$ ft.

(Barriers MB1, MB2, and MB3 cannot be installed between points E and F.)

STEP 2. Determine where in the median the trajectory from the left roadway intercepts the ground.

Using Eq. C, $x_2 = [0.02 - (-0.10)]/0.0083$
$= 14.5$ ft.

Because 14.5 ft is beyond point B (10 ft), an adjustment is necessary to determine the actual intercept with line BF.

Using Eq. A, $y_4 = 0.0083\,x_4^2$.

Also, from median geometry,

$y_4 = 0.10(10) - 0.125(x_3) + 0.02(x_4)$

and

$x_4 = 10 + x_3$

Substituting and simplifying, $0.0083\,x_4^2 + 0.105\,x_4 - 2.25 = 0$ and $x_4 = 11.2$ ft.

(Barriers MB1, MB2, and MB3 cannot be installed between points A and C.)

(Barriers MB1, MB2, and MB3 can be installed between points C and E only.)

STEP 3. If the trajectories overlap, MB1, MB2, and MB3 cannot be used. A blocked-out W-beam barrier (MB4) must be used.

STEP 4. If MB4 barrier is required, a staggered rail system as shown in Figure B-9b can be used in any area where both trajectories are no more than 1.0 ft above the ground (shaded area in above figure). The upper rail should be 27 to 30 in. above the trajectory at the rail, and the lower rail should be 30 in. above the ground at its rail. An alternative is to place a standard beam barrier at points A and F or between points C and E.

Figure B-10. Vehicle trajectory analysis procedure.

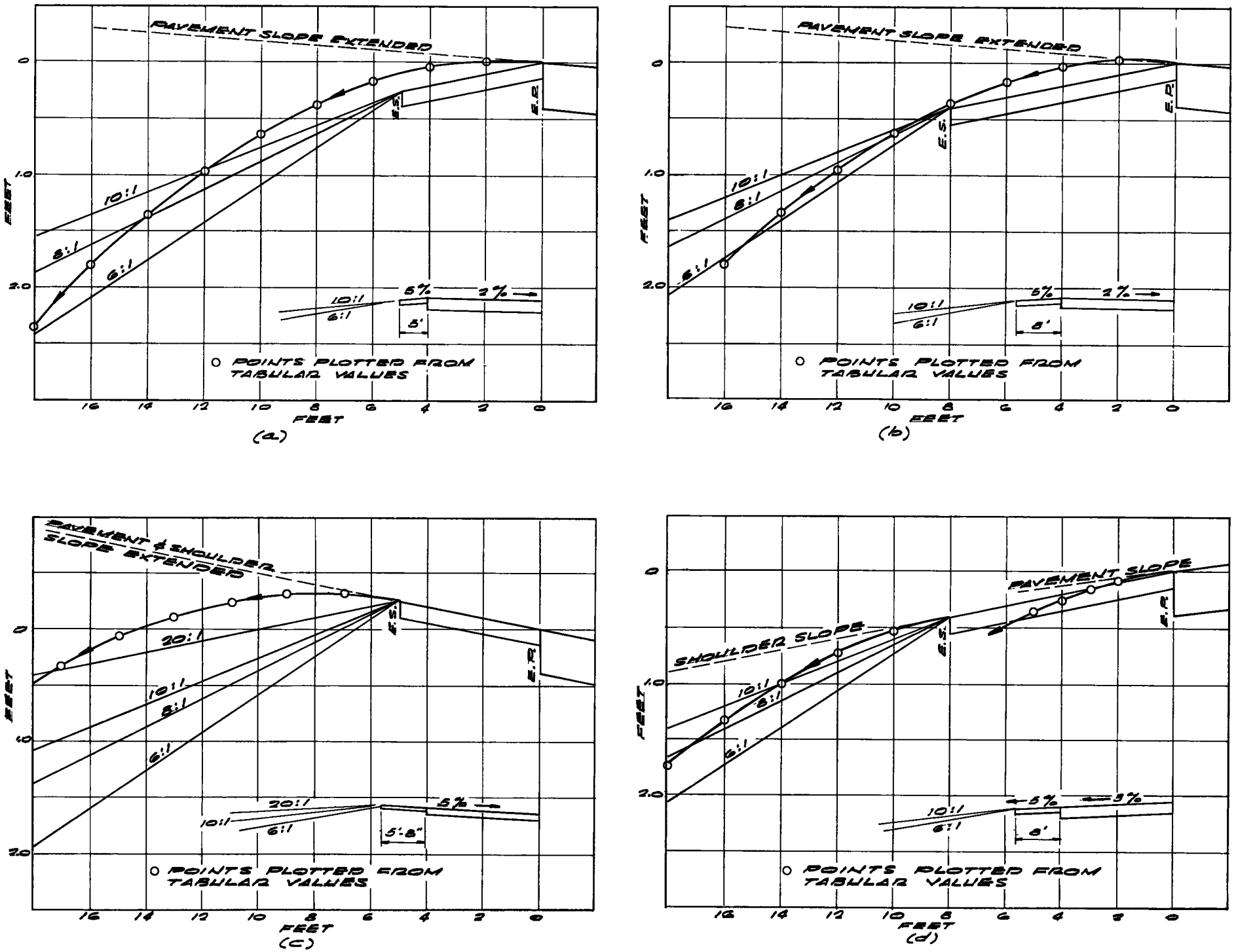

Figure B-11. Vehicle trajectory plots for stepped median.

APPENDIX C

EXAMPLE WARRANT PROBLEMS

This appendix presents typical problems for guardrail and median barrier warrants. The appropriate solutions are determined from warranting criteria as described in Chapter Two. Guardrail needs determined by roadside shoulder features (embankment geometry, dropoff, water hazards, fixed objects) are examined, then techniques for investigating divided highways for median barrier requirements are demonstrated.

SHOULDER GUARDRAIL

For illustrating the mechanics of the guardrail warranting procedure, Figure C-1 shows the common roadside conditions affecting guardrail placement. Each roadway section is analyzed as to specific shoulder guardrail requirements.

Section A-A

SOUTHBOUND SHOULDER

Step 1: Enter Figure 1 with $s = 3:1$ and $h = 13$ ft to determine if the basic embankment geometry warrants guardrail.
Guardrail is not warranted.

Step 2: Check for roadside obstacles and hazards: none.
Guardrail is not warranted.

Solution: No guardrail.

NORTHBOUND SHOULDER

Step 1: Enter Figure 1 with $s = 2\frac{1}{2}:1$ and $h = 8$ ft.
Guardrail is not warranted.

Step 2: Check roadside obstacles and hazards. The sign supports are 8-in. WF steel sections; from Table 1, if the depth of metal shapes is greater than 3½ in., guardrail is warranted.

Solution: Remove the sign from the 30-ft zone or replace the base with a breakaway design.

Alternative: If the above is impractical, guardrail is warranted.

Section B-B

SOUTHBOUND SHOULDER

Step 1: Enter Figure 1 with $s = 3:1$ and $h = 4$ ft.
Guardrail is not warranted.

Step 2: Check roadside obstacles and hazards. From Table 1, rough rock cut is a nontraversable hazard. $L = 22$.
Guardrail is warranted.

Solution: Guardrail placement at rough rock cut is warranted.

NORTHBOUND SHOULDER

Step 1: Enter Figure 1 with $s = 2:1$ and $h = 20$ ft.
Guardrail is warranted.

Solution: Flatten the slope to tolerable dimensions.

Alternative: Guardrail placement is warranted if the slope and the height of the embankment remain unchanged.

Section C-C

SOUTHBOUND SHOULDER

Step 1: Figure 1 is not applicable.

Step 2: Check roadside obstacles: none.
Guardrail is not warranted.

Step 3: A V-ditch is formed at the intersection of the shoulder and the backslope. This ditch should be "rounded" at the intersection of the slopes (40-ft radius is desirable).

Solution: Modify ditch; guardrail is not warranted.

NORTHBOUND SHOULDER

Step 1: Using Table 1, check the pond for water hazard. $L = 25$ ft; water depth is greater than 2 ft.

Solution: Guardrail is warranted at the pond.

Section D-D

SOUTHBOUND SHOULDER

Step 1: Enter Figure 1 with $s = 4:1$ and $h = 3$ ft.
Guardrail is not warranted.

Step 2: Check hazards and roadside obstacles. $L = 22$ ft; dropoff depth is more than 2 ft.
Guardrail is warranted (Table 1).

Solution: Fill dropoff if practical.

Alternate: Guardrail is warranted at dropoff, if left unchanged.

NORTHBOUND SHOULDER

Step 1: Enter Figure 1 with $s = 3:1$ and $h = 4$ ft.
Guardrail is not warranted.

Step 2: The ditch cross section adjacent to the roadway has a curved transition.

Solution: Guardrail is not warranted.

Section E-E

SOUTHBOUND SHOULDER

Step 1: Enter Figure 1 with $s = 1\frac{1}{2}:1$ and $h = 9$ ft.
Guardrail is warranted.

Solution: Flatten slope to tolerable dimensions.

Alternative: Place guardrail if slope remains unchanged.

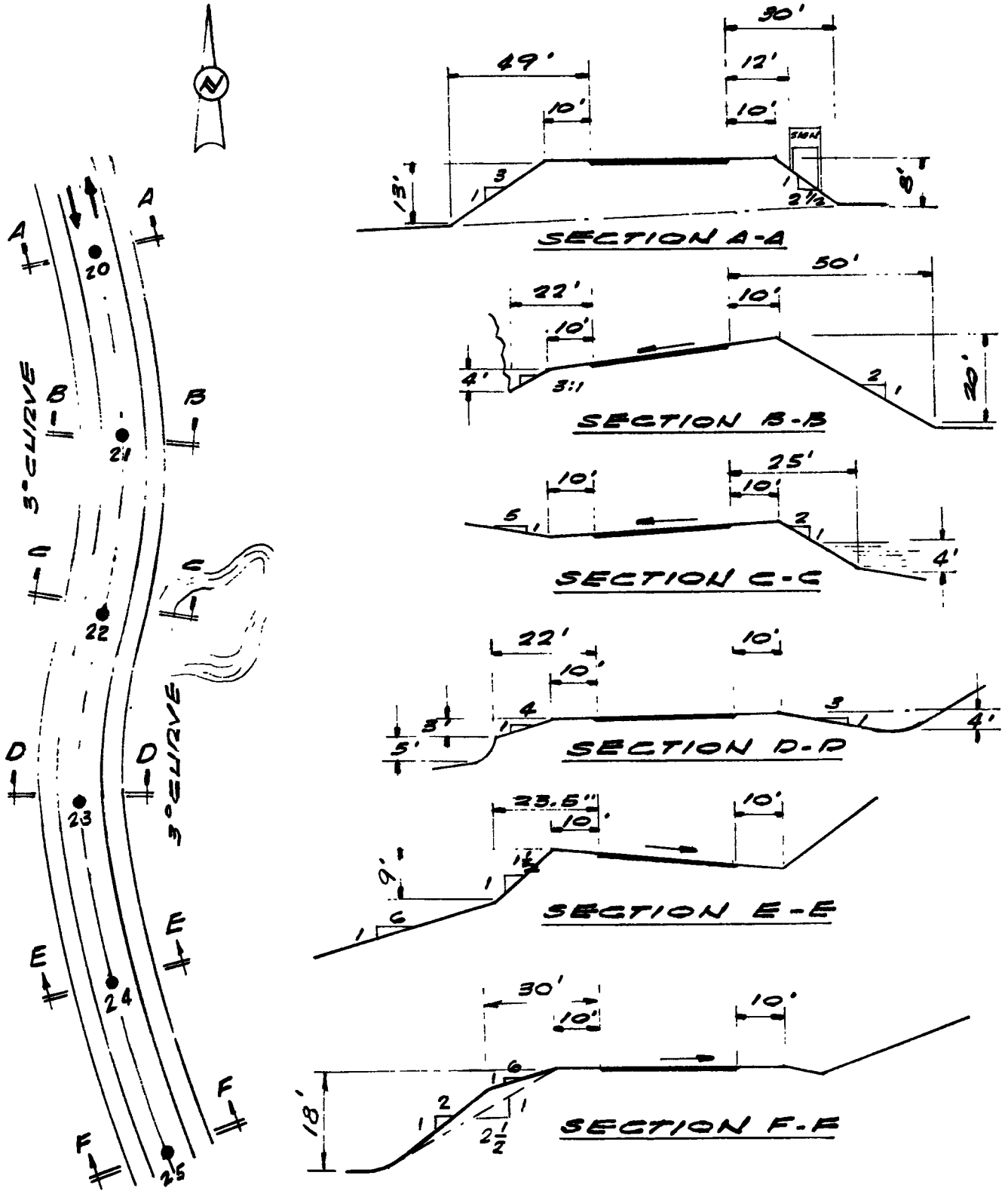

Figure C-1. Example roadway for determining warrants.

NORTHBOUND SHOULDER

Step 1: Figure 1 is not applicable.

Step 2: The V-ditch formed by the shoulder and backslope intersection should be rounded (40-ft radius desirable).

Solution: Ditch should be rounded; guardrail is not warranted.

Section F-F

SOUTHBOUND SHOULDER

Step 1: Enter Figure 1 with (average slope) $s = 2\frac{1}{2}:1$ and $H = 18$ ft.
Guardrail is not warranted.

Step 2: Check roadside obstacles and hazards: none.
Guardrail is not warranted.

Solution: Guardrail is not warranted.

NORTHBOUND SHOULDER

Solution: Provide a curved transition at the ditch.
Guardrail is not warranted.

To implement the results of the warranting procedure, a useful format for displaying these results is desirable. Figure C-2 shows a suggested format containing the warrant solutions for the example roadway. In this example format, embankment needs were checked at every station, and roadside obstacles and nontraversable hazards were checked as they occurred. Embankment and nontraversable hazard limits were arbitrarily terminated ½ station length on each side of the station where guardrail was warranted. Roadside obstacles, indicated in Figure C-2 by a "point-of-need," generally require shorter guardrail installations.

It is extremely important to extend the guardrail both upstream and downstream (two-way roadway) from the "point-of-need" so as to prevent vehicle access behind the installation. Short gaps between installations are undesirable.

MEDIAN BARRIER

The warranting procedure for a divided highway is illustrated through application to the example roadway shown in Figure C-3. The treatment of the example sections points out that the outside shoulders of divided highways are always checked for embankment geometry, roadside obstacles,

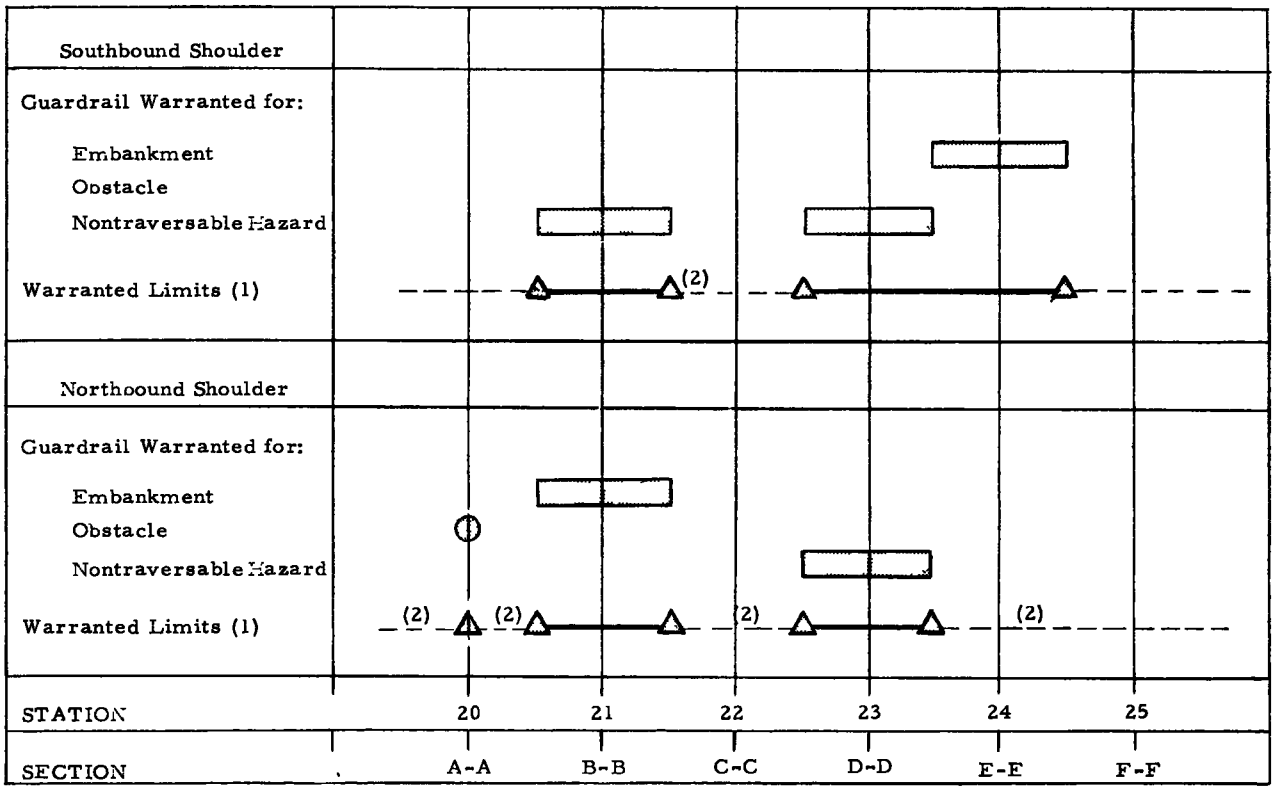

(1)Extend installations beyond warranted limits for prevention of vehicle access behind guardrail.
(2)Avoid short gaps between installations.

Figure C-2. Suggested format for summarizing results of warranting procedure.

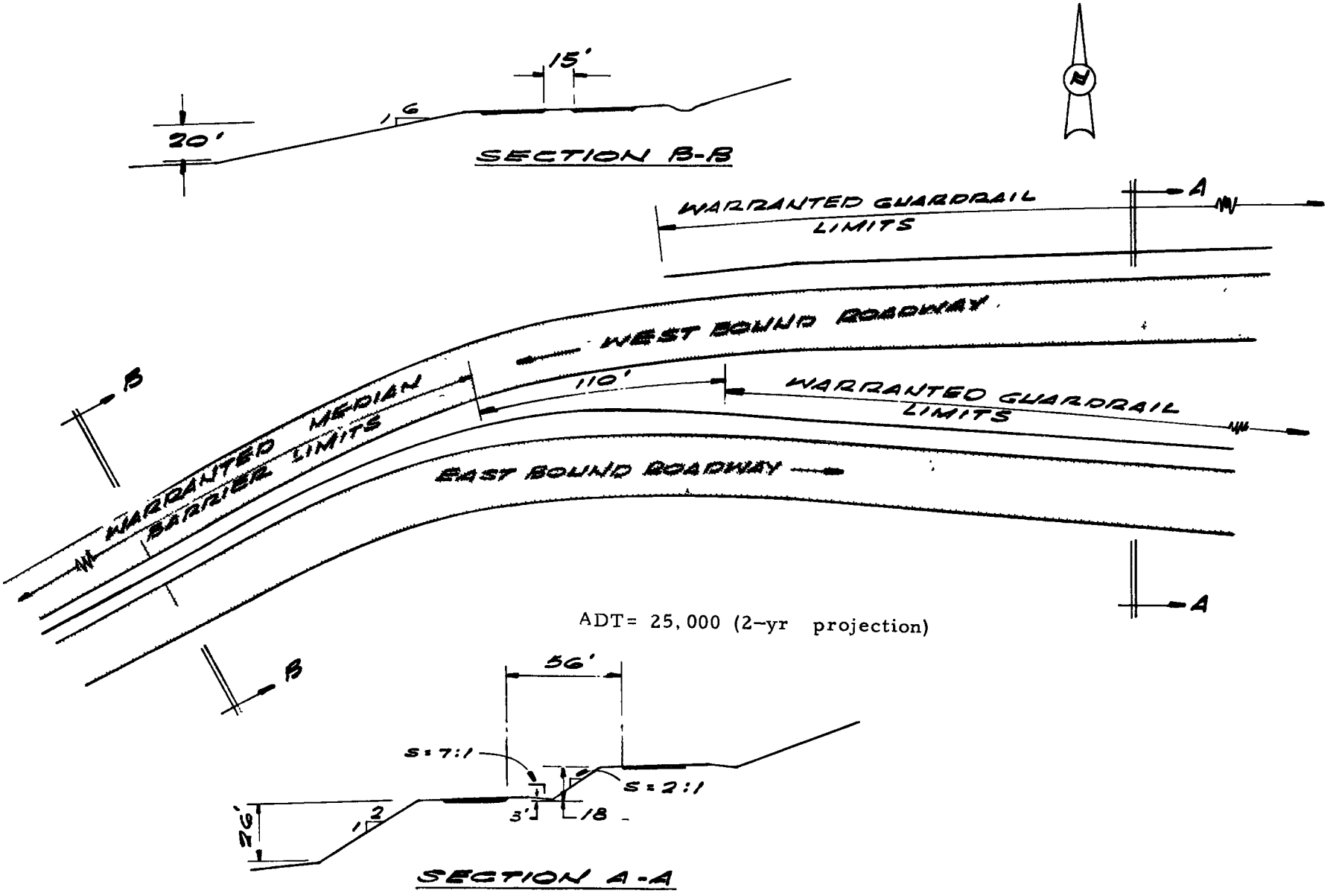

Figure C-3. Example divided highway for determining warrants.

and hazards; inside shoulders (adjacent to the opposing roadway) are checked for both median barrier and guardrail needs.

Section A-A

WESTBOUND ROADWAY, OUTSIDE SHOULDER

This lane is checked for guardrail needs.

Step 1: Enter Figure 1 with $s = 2:1$ and $h = 26$ ft. Guardrail is warranted.
Solution: Flatten slope to tolerable limits.
Alternative: Place guardrail if slope remains unchanged.

WESTBOUND ROADWAY, INSIDE SHOULDER

This lane is checked for median barrier and guardrail placement.

Step 1: Check Figure 5 for median barrier need. Median width is greater than 40 ft. Barrier is not warranted.
Step 2: Enter Figure 1 with $s = 7:1$ and $h = 3$ ft. Guardrail is not warranted.
Step 3: Check for hazards and roadside obstacles. Drainage ditch should have rounded invert (40-ft radius is desirable). Guardrail is not warranted.
Solution: Provide a smooth ditch invert. Guardrail is not warranted.

EASTBOUND ROADWAY, INSIDE SHOULDER

The median warrants have been checked previously; proceed to guardrail warrants.

Step 1: Enter Figure 1 with $s = 2:1$ and $h = 18$ ft. Guardrail is warranted.
Solution: Place guardrail on shoulder. (Check for special treatment of Standard G4.)

EASTBOUND ROADWAY, OUTSIDE SHOULDER

The backfill and embankment slopes intersect to form a V-ditch. The embankment slope is relatively flat and a curved transition should be provided at the ditch. Guardrail is not warranted.

Solution: Round the ditch invert. Guardrail is not warranted.

Section B-B

WESTBOUND ROADWAY, OUTSIDE SHOULDER

Step 1: Enter Figure 1 with $s = 6:1$ and $h = 20$ ft. Guardrail is not warranted.
Step 2: Check roadside obstacles and hazards: none. Guardrail is not warranted.
Solution: Guardrail is not warranted.

WESTBOUND ROADWAY, INSIDE SHOULDER

Step 1: Check median barrier requirements (Fig. 5). Median width = 15 ft; ADT = 25,000. Median barrier is warranted.
Solution: Install median barrier.

EASTBOUND ROADWAY, INSIDE SHOULDER

Solution: Median barrier placement is previously warranted.

EASTBOUND ROADWAY, OUTSIDE SHOULDER

The drainage ditch adjacent to this lane has a rounded invert.

Solution: Guardrail is not warranted.

The warranted limits for guardrail and median barrier placements are indicated in Figure C-3. In this case the median barrier and guardrail installation in the median were extended beyond the lengths of need to form a continuous installation and thus eliminate a short gap.

APPENDIX D

GUARDRAIL INSTALLATION PRIORITY SEQUENCE

The embankment warranting procedure of Chapter Two determines where guardrail installations are required on the basis of minimizing accident severity. The procedure is primarily applicable to new systems with high traffic volume.

Most existing highways require extensive funding and manpower to bring their guardrail systems into conformance with the recommendations of this report. The enormity of the guardrail upgrading task necessitates that the effort be performed on a priority basis. Obviously, those highway sites with adverse accident records or with the highest accident occurrence potential should be identified and upgraded first. The sequencing procedure of this appendix establishes a numerical rating index for each *warranted* embankment guardrail installation site—the larger the rating index, the greater the priority of guardrail need. This procedure does not apply to guardrails warranted by roadside obstacles or hazards.

Figure D-1 shows three basic need index curves having values of 50, 60, and 70. The "50" curve is identical to

that of Figure 1. A basic need index, N, is determined by entering Figure D-1 with embankment height and slope, interpolating between curves if necessary. For points below the "50" curve, no guardrail is warranted for embankment conditions, thus this procedure is not applicable. For ≥ 50, the basic need index number is multiplied by a composite adjustment factor, A_T (which reflects accident frequency potential), to determine the priority number, R. That is,

$$R = N A_T \qquad \text{(D-1)}$$

in which

R = the guardrail site priority number;
N = the basic need index number; and
A_T = a composite adjustment factor based on "ran off-the-road" accident frequency potential.

The value of A_T is determined by

$$A_T = A_1 A_2 A_3 A_4 A_5 \qquad \text{(D-2)}$$

in which

A_1 = a factor based on shoulder width;
A_2 = a factor based on horizontal curvature;
A_3 = a factor based on downgrade or profile conditions;
A_4 = a factor based on climatic conditions; and
A_5 = a factor based on traffic volume.

Values for A_1 through A_5 are selected from Table D-1.

Scheduling of guardrail installations is determined by engineering judgment based on rank order of all priority numbers for the highway, consistent with manpower and funding, until all critical embankments ($N \geq 50$) have been protected. Practical considerations will usually result in scheduling installations of reasonable length rather than blindly following the rank order.

Note: BEFORE ANY GUARDRAIL IS INSTALLED, A SITE EXAMINATION SHOULD VERIFY THAT FLATTENING THE EMBANKMENT SLOPE IS NOT FEASIBLE.

The procedure is as follows:

Step 1: Examine the embankment geometry according to Chapter Two. This priority procedure is applicable only if embankment guardrail is warranted.

Step 2: Determine the basic need index from Figure D-1.

Step 3: Select the appropriate accident frequency potential factors from Table D-1, and compute A_T by Eq. D-2.

Step 4: Compute the guardrail site priority number, R, by Eq. D-1.

Step 5: Tabulate the priority numbers for the highway.

Step 6: Schedule embankment guardrail installations according to the previous discussion.

TABLE D-1

ACCIDENT FREQUENCY POTENTIAL FACTORS

FACTOR	VALUE
A_1 Shoulder width, overall (ft):	
12 or more	1.00
10	1.05
8	1.10
6 or less	1.15
A_2 Horizontal curvature:	
Tangent or flat curve ($D < 1°$)	1.00
Intermediate curve ($1° \leq D \leq 10°$	1.05
Isolated intermediate curve, or curves over 10°	1.10
A_3 Downgrade or profile conditions:	
2% or less	1.00
3% to 4%, or moderate crest V.C. in combination with horizontal curve	1.10
5% or more, or extreme crest V.C. in combination with horizontal curve	1.20
A_4 Climatic conditions [a]:	
Freezing and thawing:	
Little to none	1.00
Moderate	1.05
Severe	1.15
Fog, prevalent	1.10
A_5 Traffic volume:	
V = Average daily traffic	$1 + \frac{V}{10{,}000}$

[a] Use only one factor (either freezing and thawing, or fog)

ILLUSTRATIVE PROBLEM

Illustrative problem solutions based on the example roadway shown in Figure D-2 are as follows:

Section A-A

SOUTHBOUND SHOULDER

Step 1: Enter Figure 1 with $s = 2:1$ and $h = 13$ ft. Embankment guardrail is warranted.

Step 2: Check for roadside hazards and obstacles (Chapter Two): none.

Step 3: Enter Figure D-1 with $s = 2:1$ and $h = 13$ ft. Basic need index, $N = 55$.

Step 4: Determine accident frequency potential factors and compute A_T from Table D-1.

Shoulder width = 10 ft	$A_1 = 1.05$
No curve	$A_2 = 1.00$
No grade	$A_3 = 1.00$
Severe freezing and thawing	$A_4 = 1.15$
Traffic volume: ADT = 4,000	$A_5 = 1.40$

$A_T = 1.05 \times 1.00 \times 1.00 \times 1.15 \times 1.40 = 1.69.$

Step 5: Compute priority number, $R = N\ A_T = 55 \times 1.69 = 93.$

NORTHBOUND SHOULDER

Step 1: Enter Figure 1 with $s = 2\frac{1}{2}:1$, and $h = 8$ ft. Embankment guardrail is not warranted; Appendix D is not applicable.

Step 2: Check roadside obstacles, ditches, etc. Sign supports are 8-in. WF steel sections. Use Table 1.

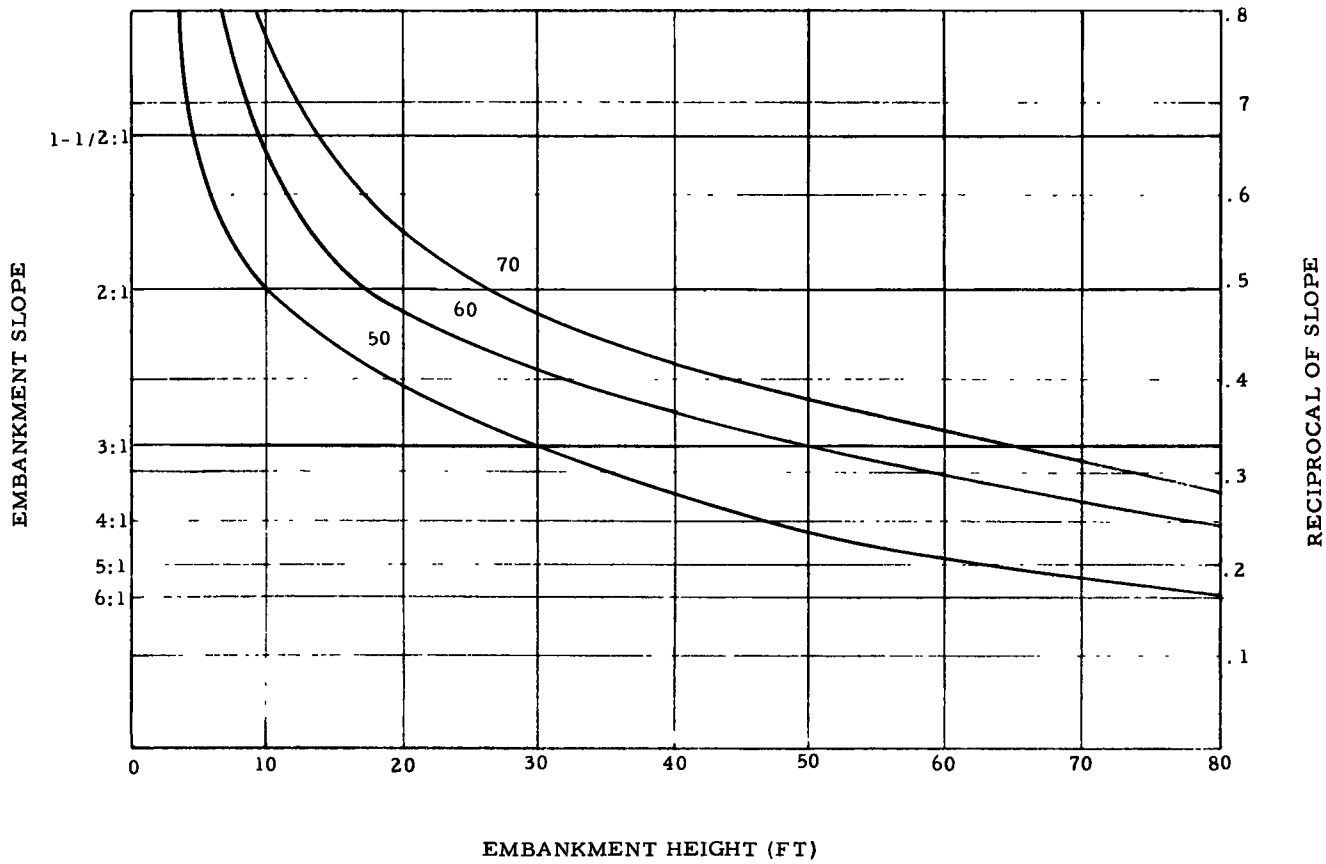

Figure D-1. Basic need index curves.

Guardrail is warranted.

Solution: Remove sign from 30-ft zone or install break-away base.

Alternative: If sign is not removed, place guardrail at sign.

Section B-B

SOUTHBOUND SHOULDER

Step 1: Figure 1 is not applicable.

Step 2: Check rough rock cut, Table 1. $L = 22$ ft.

Solution: Guardrail is warranted at rough rock cut.

NORTHBOUND SHOULDER

Step 1: Enter Figure 1 with $s = 2:1$ and $h = 20$ ft. Guardrail is warranted.

Step 2: No obstacles or hazards present.

Step 3: Enter Figure D-1 with $s = 2:1$ and $h = 20$ ft. Basic need index, $N = 63$.

Step 4: Determine accident frequency potential factors and compute A_T from Table D-1.

Shoulder width = 10 ft $A_1 = 1.05$

Outside curve, intermediate curve $A_2 = 1.05$

No grade $A_3 = 1.00$

Severe freezing and thawing $A_4 = 1.15$

ADT = 4,000 $A_5 = 1.40$

$A_T = 1.05 \times 1.05 \times 1.00 \times 1.15 \times 1.4 = 1.77.$

Step 5: Compute guardrail site priority number, $R = N\ A_T = 63 \times 1.77 = 112.$

Section C-C

SOUTHBOUND SHOULDER

Step 1: Enter Figure 1 with $s = 2:1$ and $h = 9$ ft. Guardrail is not warranted.

Step 2: Check for roadside hazards and obstacles: none.

Solution: Guardrail is not warranted.

NORTHBOUND SHOULDER

Step 1: Figure 1 is not applicable, as water hazard is clearly present.

Step 2: From Table 1: $L = 25$ ft, depth of water greater than 2 ft.

Solution: Guardrail is warranted at the pond.

Section D-D

SOUTHBOUND SHOULDER

Step 1: Enter Figure 1 with $s = 4:1$ and $h = 3$ ft. Guardrail is not warranted.

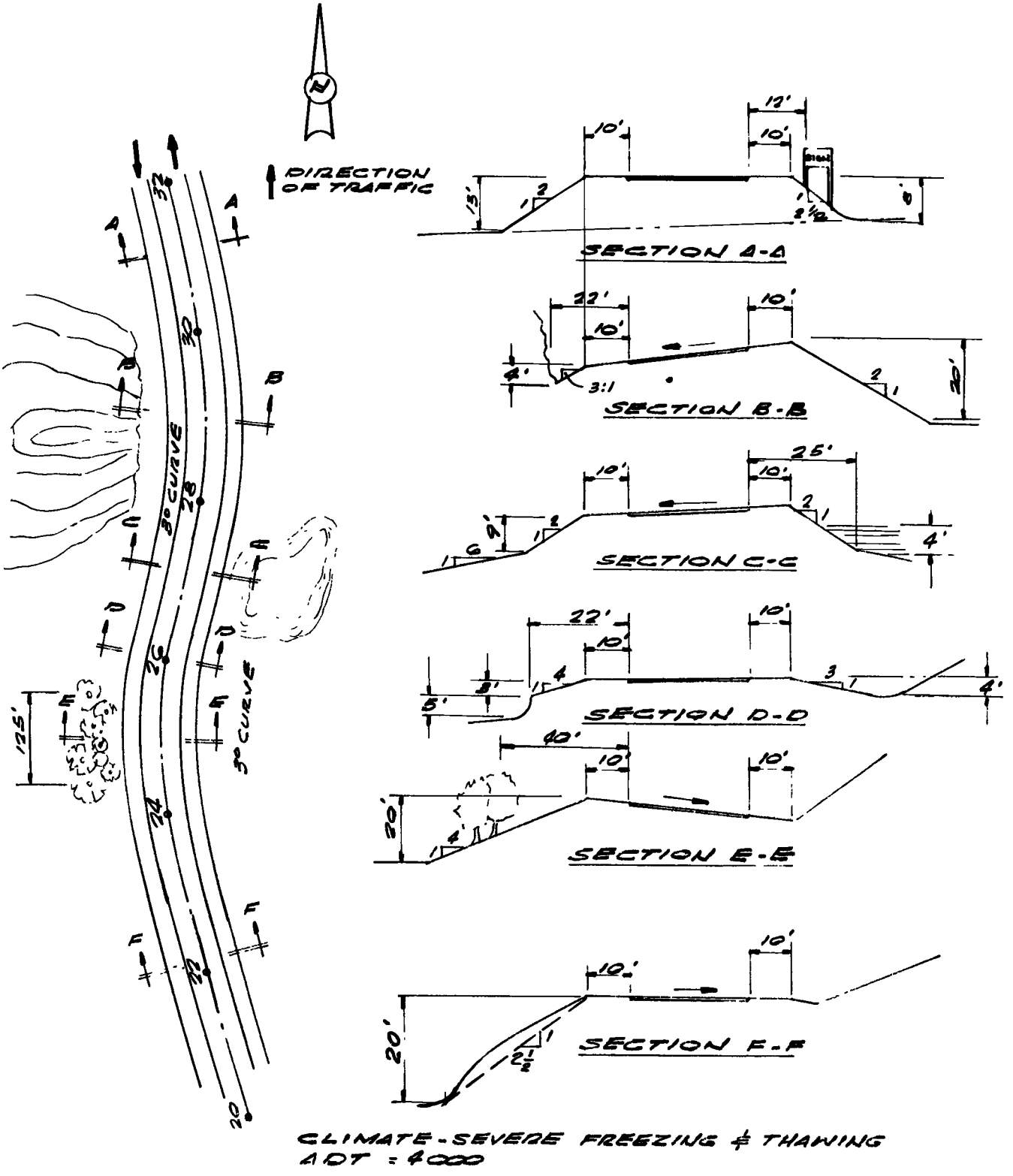

Figure D-2. Example roadway for determining installation priorities.

Step 2: Check dropoff, Table 1. $L = 22$ ft, depth greater than 2 ft.
Solution: Fill dropoff if practical.
Alternative: Guardrail is warranted at the dropoff.

NORTHBOUND SHOULDER

Step 1: Enter Figure 1 with $s = 3:1$ and $h = 4$ ft. Guardrail is not warranted.
Step 2: No hazards or obstacles present. The slope transition is rounded as recommended.
Solution: Guardrail is not warranted.

Section E-E

SOUTHBOUND SHOULDER

Step 1: Enter Figure 1 with $s = 4:1$ and $h = 20$ ft. Guardrail is not warranted.
Step 2: Check line of trees, Table 1; $L = 40$ ft, tree diameter greater than 6 in. Although this line of trees is out of the established 30-ft zone of Table 1, the extent of this line of trees along the roadway is an example of how judgment should be exercised in determining needs. From Figure 2, it is noted that about 13 percent of the vehicles in this study would have reached this line of trees traveling on relatively level grade. The grade at this line of trees is 4:1.
Solution: Remove trees.
Alternative: Guardrail may be installed at line of trees.

NORTHBOUND SHOULDER

Step 1: Figure 1 is not applicable.
Step 2: The V-ditch formed by the shoulder and backslope intersection should be rounded.
Solution: Ditch should be rounded.
Guardrail is not warranted.

Section F-F

SOUTHBOUND SHOULDER

Step 1: Enter Figure 1 with $s = 2\frac{1}{2}:1$ and $h = 20$ ft. Guardrail is warranted.
Step 2: No hazards or obstacles present.
Step 3: Enter Figure D-1 with $s = 2\frac{1}{2}:1$ and $h = 20$ ft; $N = 51$.
Step 4: Compute A_T from Table D-1:

Shoulder width = 10 ft	$A_1 = 1.05$
No curve	$A_2 = 1.00$
No grade	$A_3 = 1.00$
Severe freezing and thawing	$A_4 = 1.15$
ADT = 4,000	$A_5 = 1.40$

$A_T = 1.05 \times 1.00 \times 1.00 \times 1.15 \times 1.40 = 1.69$

Step 5: $R = N A_T = 51 \times 1.69 = 86$.

NORTHBOUND SHOULDER

Solution: Provide curved transition at ditch.
Guardrail is not warranted.

The guardrail need and the sequence of installation for the illustrative problem are summarized in Table D-2. In establishing guardrail placement limits, Chapter Three calls for extension of each guardrail installation beyond the theoretical limits established by warrants.

TABLE D-2

GUARDRAIL INSTALLATION SEQUENCE SUMMARY

ROADWAY [a] SECTION	SHOULDER	GUARDRAIL WARRANTED	PRIORITY NUMBER	INSTALLATION SEQUENCE [b]
A-A	Southbound	Yes	93	3
	Northbound	Yes	NA	1
B-B	Southbound	Yes	NA	1
	Northbound	Yes	112	2
C-C	Southbound	No		
	Northbound	Yes	NA	1
D-D	Southbound	No		
	Northbound	Yes	NA	1
E-E	Southbound	Yes	NA	1
	Northbound	No		
F-F	Southbound	Yes	86	4
	Northbound	No		

[a] See Figure D-2.
[b] See Figure D-2
[b] Guardrail warranted by roadside obstacles and nontraversable hazards installed first; guardrail warranted by embankment installed according to sequence number

Published reports of the

NATIONAL COOPERATIVE HIGHWAY RESEARCH PROGRAM

are available from:

Highway Research Board
National Academy of Sciences
2101 Constitution Avenue
Washington, D.C. 20418

Rep. No. *Title*

—* A Critical Review of Literature Treating Methods of Identifying Aggregates Subject to Destructive Volume Change When Frozen in Concrete and a Proposed Program of Research—Intermediate Report (Proj. 4-3(2)), 81 p., $1.80

1 Evaluation of Methods of Replacement of Deteriorated Concrete in Structures (Proj. 6-8), 56 p., $2.80

2 An Introduction to Guidelines for Satellite Studies of Pavement Performance (Proj. 1-1), 19 p., $1.80

2A Guidelines for Satellite Studies of Pavement Performance, 85 p.+9 figs., 26 tables, 4 app., $3.00

3 Improved Criteria for Traffic Signals at Individual Intersections--Interim Report (Proj. 3-5), 36 p., $1.60

4 Non-Chemical Methods of Snow and Ice Control on Highway Structures (Proj. 6-2), 74 p., $3.20

5 Effects of Different Methods of Stockpiling Aggregates—Interim Report (Proj. 10-3), 48 p., $2.00

6 Means of Locating and Communicating with Disabled Vehicles—Interim Report (Proj. 3-4), 56 p. $3.20

7 Comparison of Different Methods of Measuring Pavement Condition—Interim Report (Proj. 1-2), 29 p., $1.80

8 Synthetic Aggregates for Highway Construction (Proj. 4-4), 13 p., $1.00

9 Traffic Surveillance and Means of Communicating with Drivers—Interim Report (Proj. 3-2), 28 p., $1.60

10 Theoretical Analysis of Structural Behavior of Road Test Flexible Pavements (Proj. 1-4), 31 p., $2.80

11 Effect of Control Devices on Traffic Operations—Interim Report (Proj. 3-6), 107 p., $5.80

12 Identification of Aggregates Causing Poor Concrete Performance When Frozen—Interim Report (Proj. 4-3(1)), 47 p., $3.00

13 Running Cost of Motor Vehicles as Affected by Highway Design—Interim Report (Proj. 2-5), 43 p., $2.80

14 Density and Moisture Content Measurements by Nuclear Methods—Interim Report (Proj. 10-5), 32 p., $3.00

15 Identification of Concrete Aggregates Exhibiting Frost Susceptibility—Interim Report (Proj. 4-3(2)), 66 p., $4.00

16 Protective Coatings to Prevent Deterioration of Concrete by Deicing Chemicals (Proj. 6-3), 21 p., $1.60

17 Development of Guidelines for Practical and Realistic Construction Specifications (Proj. 10-1.) 109 p., $6.00

18 Community Consequences of Highway Improvement (Proj. 2-2), 37 p., $2.80

19 Economical and Effective Deicing Agents for Use on Highway Structures (Proj. 6-1), 19 p., $1.20

20 Economic Study of Roadway Lighting (Proj. 5-4), 77 p., $3.20

21 Detecting Variations in Load-Carrying Capacity of Flexible Pavements (Proj. 1-5), 30 p., $1.40

22 Factors Influencing Flexible Pavement Performance (Proj. 1-3(2)), 69 p., $2.60

23 Methods for Reducing Corrosion of Reinforcing Steel (Proj. 6-4), 22 p., $1.40

24 Urban Travel Patterns for Airports, Shopping Centers, and Industrial Plants (Proj. 7-1), 116 p., $5.20

25 Potential Uses of Sonic and Ultrasonic Devices in Highway Construction (Proj. 10-7), 48 p., $2.00

26 Development of Uniform Procedures for Establishing Construction Equipment Rental Rates (Proj. 13-1), 33 p., $1.60

27 Physical Factors Influencing Resistance of Concrete to Deicing Agents (Proj. 6-5), 41 p., $2.00

28 Surveillance Methods and Ways and Means of Communicating with Drivers (Proj. 3-2), 66 p., $2.60

29 Digital-Computer-Controlled Traffic Signal System for a Small City (Proj. 3-2), 82 p., $4.00

30 Extension of AASHO Road Test Performance Concepts (Proj. 1-4(2)), 33 p., $1.60

31 A Review of Transportation Aspects of Land-Use Control (Proj. 8-5), 41 p., $2.00

32 Improved Criteria for Traffic Signals at Individual Intersections (Proj. 3-5), 134 p., $5.00

33 Values of Time Savings of Commercial Vehicles (Proj. 2-4), 74 p., $3.60

34 Evaluation of Construction Control Procedures—Interim Report (Proj. 10-2), 117 p., $5.00

35 Prediction of Flexible Pavement Deflections from Laboratory Repeated-Load Tests (Proj. 1-3(3)), 117 p., $5.00

36 Highway Guardrails—A Review of Current Practice (Proj. 15-1), 33 p., $1.60

37 Tentative Skid-Resistance Requirements for Main Rural Highways (Proj. 1-7), 80 p., $3.60

38 Evaluation of Pavement Joint and Crack Sealing Materials and Practices (Proj. 9-3), 40 p., $2.00

39 Factors Involved in the Design of Asphaltic Pavement Surfaces (Proj. 1-8), 112 p., $5.00

40 Means of Locating Disabled or Stopped Vehicles (Proj. 3-4(1)), 40 p., $2.00

41 Effect of Control Devices on Traffic Operations (Proj. 3-6), 83 p., $3.60

* Highway Research Board Special Report 80

Rep. No.	*Title*
42	Interstate Highway Maintenance Requirements and Unit Maintenance Expenditure Index (Proj. 14-1), 144 p., $5.60
43	Density and Moisture Content Measurements by Nuclear Methods (Proj. 10-5), 38 p., $2.00
44	Traffic Attraction of Rural Outdoor Recreational Areas (Proj. 7-2), 28 p., $1.40
45	Development of Improved Pavement Marking Materials—Laboratory Phase (Proj. 5-5), 24 p., $1.40
46	Effects of Different Methods of Stockpiling and Handling Aggregates (Proj. 10-3), 102 p., $4.60
47	Accident Rates As Related to Design Elements of Rural Highways (Proj. 2-3), 173 p., $6.40
48	Factors and Trends in Trip Lengths (Proj. 7-4), 72 p., $3.20
49	National Survey of Transportation Attitudes and Behavior—Phase I Summary Report (Proj. 20-4), 71 p., $3.20
50	Factors Influencing Safety at Highway-Rail Grade Crossings (Proj. 3-8), 113 p., $5.20
51	Sensing and Communication Between Vehicles (Proj. 3-3), 105 p., $5.00
52	Measurement of Pavement Thickness by Rapid and Nondestructive Methods (Proj. 10-6), 82 p., $3.80
53	Multiple Use of Lands Within Highway Rights-of-Way (Proj. 7-6), 68 p., $3.20
54	Location, Selection, and Maintenance of Highway Guardrail and Median Barriers (Proj. 15-1(2)), 63 p., $2.60

THE NATIONAL ACADEMY OF SCIENCES is a private, honorary organization of more than 700 scientists and engineers elected on the basis of outstanding contributions to knowledge. Established by a Congressional Act of Incorporation signed by President Abraham Lincoln on March 3, 1863, and supported by private and public funds, the Academy works to further science and its use for the general welfare by bringing together the most qualified individuals to deal with scientific and technological problems of broad significance.

Under the terms of its Congressional charter, the Academy is also called upon to act as an official—yet independent—adviser to the Federal Government in any matter of science and technology. This provision accounts for the close ties that have always existed between the Academy and the Government, although the Academy is not a governmental agency and its activities are not limited to those on behalf of the Government.

THE NATIONAL ACADEMY OF ENGINEERING was established on December 5, 1964. On that date the Council of the National Academy of Sciences, under the authority of its Act of Incorporation, adopted Articles of Organization bringing the National Academy of Engineering into being, independent and autonomous in its organization and the election of its members, and closely coordinated with the National Academy of Sciences in its advisory activities. The two Academies join in the furtherance of science and engineering and share the responsibility of advising the Federal Government, upon request, on any subject of science or technology.

THE NATIONAL RESEARCH COUNCIL was organized as an agency of the National Academy of Sciences in 1916, at the request of President Wilson, to enable the broad community of U. S. scientists and engineers to associate their efforts with the limited membership of the Academy in service to science and the nation. Its members, who receive their appointments from the President of the National Academy of Sciences, are drawn from academic, industrial and government organizations throughout the country. The National Research Council serves both Academies in the discharge of their responsibilities.

Supported by private and public contributions, grants, and contracts, and voluntary contributions of time and effort by several thousand of the nation's leading scientists and engineers, the Academies and their Research Council thus work to serve the national interest, to foster the sound development of science and engineering, and to promote their effective application for the benefit of society.

THE DIVISION OF ENGINEERING is one of the eight major Divisions into which the National Research Council is organized for the conduct of its work. Its membership includes representatives of the nation's leading technical societies as well as a number of members-at-large. Its Chairman is appointed by the Council of the Academy of Sciences upon nomination by the Council of the Academy of Engineering.

THE HIGHWAY RESEARCH BOARD, organized November 11, 1920, as an agency of the Division of Engineering, is a cooperative organization of the highway technologists of America operating under the auspices of the National Research Council and with the support of the several highway departments, the Bureau of Public Roads, and many other organizations interested in the development of highway transportation. The purposes of the Board are to encourage research and to provide a national clearinghouse and correlation service for research activities and information on highway administration and technology.

HIGHWAY RESEARCH BOARD
NATIONAL ACADEMY OF SCIENCES—NATIONAL RESEARCH COUNCIL
2101 Constitution Avenue Washington, D. C. 20418

ADDRESS CORRECTION REQUESTED

NON-PROFIT ORG.
U.S. POSTAGE
PAID
WASHINGTON, D.C.
PERMIT NO. 42970