SPECIAL REPORT 114

WELDED HIGHWAY BRIDGES

an analysis of inspection factors

HIGHWAY RESEARCH BOARD

National Research Council National Academy of Sciences National Academy of Engineering

HIGHWAY RESEARCH BOARD

Officers and Members of the Executive Committee
1970

OFFICERS

D. GRANT MICKLE
Chairman

CHARLES E. SHUMATE
First Vice Chairman

ALAN M. VOORHEES
Second Vice Chairman

W. N. CAREY, JR.
Executive Director

Executive Committee

Francis C. Turner, *Federal Highway Administrator, U.S. Department of Transportation* (ex officio)

A. E. Johnson, *Executive Director, American Association of State Highway Officials* (ex officio)

Ernest Weber, *Chairman, Division of Engineering, National Research Council* (ex officio)

David H. Stevens, *Chairman, Maine State Highway Commission* (ex officio, Past Chairman 1968)

Oscar T. Marzke, *Vice President, Fundamental Research, United States Steel Corporation* (ex officio, Past Chairman 1969)

Donald S. Berry, *Department of Civil Engineering, Northwestern University*

Charles A. Blessing, *Director, Detroit City Planning Commission*

Jay W. Brown, *Chairman, Florida Department of Transportation*

J. Douglas Carroll, Jr., *Executive Director, Tri-State Transportation Commission, New York City*

Howard A. Coleman, *Consultant, Missouri Portland Cement Company*

Harmer E. Davis, *Director, Institute of Transportation and Traffic Engineering, University of California*

William L. Garrison, *School of Engineering, University of Pittsburgh*

Sidney Goldin, *Director and Consultant, Witco Chemical Company, New York City*

William J. Hedley, *Consultant, Federal Highway Administration, U.S. Department of Transportation*

George E. Holbrook, *Vice President, E. I. du Pont de Nemours and Company*

Eugene M. Johnson, *President, The Asphalt Institute*

John A. Legarra, *State Highway Engineer and Chief of Division, California Division of Highways*

W. A. McConnell, *Director, Operations Office, Engineering Staff, Ford Motor Company*

John J. McKetta, *Executive Vice Chancellor for Academic Affairs, The University of Texas System*

J. B. McMorran, *Consultant, Troy, New York*

D. Grant Mickle, *President, Highway Users Federation for Safety and Mobility*

Richard L. Peyton, *Assistant State Highway Director, State Highway Commission of Kansas*

Charles E. Shumate, *Executive Director-Chief Engineer, Colorado Department of Highways*

R. G. Stapp, *Superintendent, Wyoming State Highway Commission*

Alan M. Voorhees, *Alan M. Voorhees and Associates, Inc.*

Editorial Staff

Stephen Montgomery
Senior Editor

Beatrice G. Crofoot
Production Manager

The opinions and conclusions expressed in this publication are those of the authors and not necessarily those of the Highway Research Board.

NAS-NAE
OCT 2 6 1971
LIBRARY

SPECIAL REPORT 114

WELDED HIGHWAY BRIDGES

an analysis of inspection factors

NAS-NAE

AUG 17 1970

LIBRARY

Subject Areas

27 Bridge Design
33 Construction
34 General Materials

Highway Research Board • Division of Engineering • National Research Council
National Academy of Sciences • National Academy of Engineering
WASHINGTON, D.C. 1970

Standard Book Number 309-01807-2

Price $2.80

Available from

Highway Research Board
National Academy of Sciences
2101 Constitution Avenue
Washington, D.C. 20418

Department of Materials and Construction

R. L. Peyton (chairman), State Highway Commission of Kansas, Topeka

R. E. Bollen and W. G. Gunderman, Highway Research Board Staff

GENERAL MATERIALS DIVISION

John L. Beaton (chairman), California Division of Highways, Sacramento

Committee on Metals in Highway Structures

Arthur W. Moon (chairman), New York State Department of Transportation, Albany
Philip A. Barnes (secretary), New York State Department of Transportation, Utica

W. C. Anderson
Gordon Cape
S. K. Coburn
Frank Couch
John R. Daesen
T. D. Dismuke
Eric L. Erickson
Edward A. Fenton
E. Ferrence
LaMotte Grover
Richard L. Hartzell
James H. Havens
Gerald J. Hill
Ray I. Lindberg
Thomas A. Lowe
Robert A. Manson
Theodore A. Mowatt
Eric F. Nordlin
Robert A. Norton
J. C. Oliver
Thomas W. Oliver
Robert A. Pege
Robert G. Pike
Joseph W. Pitts
Harry D. Richardson
Melvin Romanoff
Richard K. Sager
W. W. Sanders, Jr.
E. P. Segner, Jr.
Clyde F. Silvus
James E. Stallmeyer
R. F. Stratfull
George J. Verbeck
Frank O. Wood
L. E. Wood

Foreword

During the 1950's, arc welding was used increasingly in the fabrication and erection of highway bridges. Engineers, inspectors, fabricators, and contractors engaged in this work expressed a need for information that had been obtained through research and investigation conducted in both field and shop.

In recognition of this need, the Highway Research Board's Committee on Metals and Welding appointed a special subcommittee to assemble the most authoritative information available on the subject. The intent was to assemble not everything that had been written but only the information and data that would be most frequently used by those who had responsibility for this aspect of bridge construction.

The results of the subcommittee's work were published by the Board in 1959 as Special Report 45. Its purpose was to assist in the full understanding of the problems relating to the fabrication and erection of welded steel structures, in the interpretation of specifications, and in the inspection of the various types of welds to ensure compliance with specifications. The report was also intended to help practitioners interpret the meaning of welded terms and symbols, interpret the requirements of plans and specifications, evaluate the general quality of welding by visual inspection, prevent or correct faulty welds, and appraise defects or imperfections as to whether or not they would impair the strength of the structure.

By the end of the 1960's numerous advances in the processes, procedures, and techniques of arc welding and production of new grades of high-quality structural and alloy steel necessitated revisions to the report published in 1959. This task was undertaken by the Subcommittee on Welding, appointed by the Board's Committee on Metals in Highway Structures (formerly called the Committee on Metals and Welding), and the results of its work are published in this Special Report 114.

In this new edition, particular effort has been made to update the material to conform with current code and specification requirements and also to the technology that has rapidly changed in this field. A new chapter on nondestructive testing has been added. Because the purpose of this new edition is similar to that of the earlier one, it does not cover fully every aspect of welding fabrication. Additional sources of information are given in the Bibliography.

Grateful acknowledgment is made to the British Welding Institute and to the American Welding Society for permission to reproduce information from their publications and to the California Division of Highways for providing many of the photographs of welding defects. Acknowledgment is also made to those who served in 1959 on the Committee on Metals and Welding and those who serve currently on the Committee on Metals in Highway Structures. Special acknowledgment is made of the diligent efforts of the members of the two subcommittees who researched the literature and prepared and revised the materials for the two special reports. Subcommittee members for the 1959 edition included A. W. Moon, chairman, R. B. Alexander, G. Cape, L. G. Grover, I. O. Jahlstrom, G. W. Lamb, and J. F. Wills. Subcommittee members for this current edition include G. J. Hill, chairman, G. Cape, F. Couch, E. A. Fenton, L. Grover, R. L. Hartzell, R. A. Manson, T. A. Mowatt, E. F. Nordlin, R. A. Norton, R. K. Sager, W. W. Sanders, E. P. Segner, C. F. Silvus, and J. E. Stallmeyer.

LaMotte Grover, chairman (1959)
Committee on Metals and Welding
and
A. W. Moon, chairman (1970)
Committee on Metals in Highway Structures

Contents

INTRODUCTION 1

1 DUTIES OF THE WELDING INSPECTOR 3

2 VERIFICATION OF PROCEDURES AND QUALIFICATIONS OF WELDERS 7

3 INTERPRETATION OF DRAWINGS AND SPECIFICATIONS 9

4 WELDING PROCEDURES 10

5 METHODS AND DEVICES FOR FITTING, SHOP ASSEMBLY, AND FIELD ERECTION 27

6 WELDING SEQUENCES 31

7 CONTROL OF DISTORTION 44

8 CORRECTION OF DISTORTION 48

9 DEFECTS IN ARC WELDS IN MILD AND LOW-ALLOY STEELS 52

10 SAFETY AND PROTECTIVE EQUIPMENT 67

11 NONDESTRUCTIVE TESTING 68

BIBLIOGRAPHY 76

GLOSSARY 77

Introduction

The amount of shop welding for fabrication of a welded bridge will range from the welding of a few girder stiffeners, floor expansion devices, and minor details for rolled beam spans to the complete fabrication of girders and trusses from plate material and shapes. The field welding necessary to construct a highway bridge is sometimes but a small part of the total work. In either the shop or the field, however, welding is an important part of the work, often involving the safety of the structure. The necessity for thorough inspection during the preparation of material, fitting at joints, and the welding operations cannot be overemphasized. Inspection of shop welding for some bridges may constitute the major part of the work of a shop inspector. Field welding inspection on many projects may be a large part of the duties of a bridge inspector. Both the shop and field inspection must be carefully and intelligently performed.

The most common welding processes used in bridge construction are manual shielded metal-arc welding with covered metal electrodes and submerged arc welding for carbon and low-alloy steels (ASTM Specifications A 36 and A 588). However, gas metal-arc welding, flux cored arc welding, electroslag welding, and electrogas welding have come into sufficiently extensive use to be included now in the American Welding Society's Specifications for Welded Highway and Railway Bridges (6), referred to subsequently in this report as the AWS Bridge Specifications. These Specifications also provide for the use of several newer structural steels, including high-strength, low-alloy steel and an alloy steel plate material that is quenched and tempered and has high yield strength. The scope clauses of the newer specifications must be read carefully because some of them contain instructions for special provisions relating to welding procedures and to bridge construction in general.

The intent of this report is to amplify and explain interrelated inspection factors that might not be understood fully by an inspector who is not thoroughly experienced in welding. It will help him to understand the meaning of welding terms and symbols and to appreciate the importance of matters such as qualification of welders and the requirements for acceptance of welding procedures. Furthermore, it will tell him how to use various means of inspection, when protective equipment is required, how to make simple weld tests in the field when they are needed, how to interpret the requirements of the plans and specifications with respect to preheating, how to evaluate the general quality of welding from visual inspection, how to prevent or correct faulty welds, how to ensure the proper fit-up of joints, and how to appraise defects or imperfections that may not impair the strength of the structure.

Considerations of practicability and cost have limited the amount of data and information that has been included in this report. An attempt has been made to include only the data that will be used most frequently by an inspector. Some other equally important but more easily understood parts of the welding and material specifications are not treated. Therefore, this report should not be considered as a complete guide covering all information required by the inspector of a welded bridge. A list of references used in this report and other materials compose a Bibliography included to indicate sources of information that may be of interest or may be needed in unusual cases. Manuals and specifications published by the American Welding Society will be especially helpful.

As in any type of construction work, the welding inspector should be careful not to impose arbitrary requirements that are not based on specification provisions or other reliable and proven information and data pertaining to good workmanship. He must discriminate between minor imperfections of little consequence and more serious defects that really detract from the quality of the finished structure or will jeopardize its behavior in subsequent service. In doing this, he will strengthen his position when insisting that important requirements be met.

Welding folklore is full of traditional superstitions and old wives' tales based on erroneous hypotheses that were developed in a purely arbitrary manner in the early days of welding. Most of the false beliefs have been disproved in research, where factors believed to be influential have been carefully controlled and their influences evaluated. For example, some welders, welding foremen, and inspectors claim that certain welding techniques, procedures, and sequences of deposition of weld metal in a joint have been devised for the purpose of holding residual stresses to a minimum, although no measurements of residual stresses have been made to substantiate this claim. In fact, recent research has shown that the welding sequence has no effect on the magnitude of residual stresses at welded butt splices in steel beams.

It has sometimes been erroneously assumed that deformations and distortions are caused principally by residual stresses, and that the magnitude of such deformations is an indication of the magnitude of residual stresses. Such distortions are really quite largely the result of changes of dimensions caused by permanent upsetting or shortening of localized areas that have been heated by welding and caused by shrinkage of the heated metal during cooling.

Experience in the control of distortion and weld cracking has shown that in most large weldments it is advisable to weld, in general, from points of maximum restraint toward points of less restraint, such as free edges of plates being joined. The reason for such a provision, however, is not to reduce residual stresses that remain in a weldment after its completion, that are usually of yield point intensity in one direction, and that are found in any rolled steel material as well as at welded joints. Except under very unusual circumstances, they have not been found to exert a significant effect on the capacity of a structure to carry load.

Extensive tests carried out at the University of California involved careful determination of residual stresses by a well-established method to determine the effects of local buildup, sequence of welding, and the direction of welding in making butt welded joints in 8- by 6-ft panels involving 4 plates each. Influences on residual stresses were found to be very complex. The tests disproved many of the arbitrary assumptions and beliefs that had been held. For example, there was no appreciable difference between the residual stresses in 2 of the panels of plating, one of which had been welded by starting at the middle of the group of plates and welding toward the 4 free plate edges, and the other of which was welded by starting at the free edges and welding toward the center of the panel. No significant difference in residual stress intensities or their patterns were found when either submerged-arc welding with a small number of weld passes or manual welding with a much greater number of continuous passes was used.

Proper welding procedures, techniques, and sequences are especially important for the control of distortion and to prevent weld cracking caused by temporary shrinkage stresses. The use of proper welding procedures and techniques must always be maintained to ensure the making of sound welds. Preheat and interpass temperature control are often necessary to prevent cracking. However, in welding some steels, such as the quenched and tempered constructional alloy steels (ASTM Specification A 514), excessive preheat and interpass temperatures can be harmful to the steels. Also, in some unusual cases where joints are welded while surrounded by severe restraint, excessive local preheat can cause rather than prevent cracking. However, correct objectives and not unfounded beliefs should be kept in mind. If the efforts of a welding inspector are directed to the control of residual stresses, he will inevitably become confused and perhaps inadvertently impose requirements that will do more harm than good. If he seeks to control cracking and distortion, the correct objective, he will be able to exercise his judgment rationally. This report attempts to aid him in attaining the goal of sound work, done well.

1

Duties of the Welding Inspector

Before he is assigned to a project, an inspector should have a thorough knowledge of bridge welding and of his duties as an inspector. He should be supplied with a complete set of design and shop drawings, specifications for that contract, records of any previous steel fabrication and inspection on it, a suitable weld gage, protective face shield, tape, scale, magnifying glass of about 10-power, dye penetrant testing kit, marking crayons, and temperature-indicating crayons.

Before actual welding operations on a contract are started, the inspector should confer with the welding foreman and shop superintendent to ensure that they know which procedures and sequences of welding are to be followed, which welders are qualified, which electrodes and materials have been approved for the contract and how these materials should be stored, and what welding equipment is acceptable for use on the contract. There should also be agreement on the methods of nondestructive testing to be used and the welds to be inspected by these methods.

Inspection of welding is similar to inspection of any other work performed during bridge construction. It consists mainly of seeing that the plans and specifications are followed. Before welding is started in a shop or at a field location, the inspector should see that the steel is not bent or injured and has no visible external defects exceeding the tolerances prescribed on the specification. He should ensure that it is prepared and assembled with proper fitting for sound welds and for maintenance of correct dimensions and alignment. He should also ascertain that suitable provisions are made so that the shrinkage during welding can be accommodated without causing distortion or shrinkage cracks. He must be sure that shop jigs and fixtures, erection falsework, and other supporting devices are arranged so that the welder is not unduly restricted in his movements and is able to see the point where he is welding and to hold his electrode in the proper position.

After welding has started, the inspector observes the welding procedures, techniques, and sequences to ensure that the welds meet the requirements of the plans and specifications. The various steps of the welding procedure, especially for multiple pass butt welds, must be performed carefully to ensure that the surfaces are clean where the weld metal is to be deposited, that the weld is being made in accordance with the approved procedures, and that distortion is not becoming serious. All objectionable distortions should be recorded and called to the fabricator's attention even if they do not appear serious enough to require correction. If the fabricator does not correct these distortions, the engineer should be notified before the work advances so far that the correction is difficult.

The inspector should refer to the engineer the decisions that he is not authorized to make, that he is not capable of making because of his experience and knowledge of engineering and welding theory, or that he thinks would affect the function of any part of the structure in an important way. He should convey the engineer's interpretations of the plans to the fabricator.

A welding inspector should have enough welding experience to be able to differentiate satisfactory and poor welding techniques on sight and to recognize and identify satisfactory welding procedures by description. He should also have enough knowledge of the nondestructive testing (NDT) methods, techniques, and procedures to inspect bridge welds and to know when to call for and how to use the results of such nondestructive tests to guide the repair of discovered defects.

The following checklist is suggested for use as a general guide in making welding inspections in the shop or in the field. The actual steps and their exact sequence will depend on the type of bridge, the method of erection, and the qualifications of the welders

who are to do the work. The checklist pertains particularly to welding and related operations and does not include all of the items that should be checked.

Prior to Welding

1. At the fabricating plant, check the mill test reports on the base metal for conformance with the specifications with regard to mechanical properties and chemical properties to the extent that they are specified. Develop a workable system for identifying the heat number of each piece of steel that is used in contract fabrication and recording its location in the structure. Obtain from the fabricator, if necessary, the shipping records, storage locations, and scheduling for each piece of steel that he intends to use in connection with the assigned contract. Examine each piece of steel as it is received at the shop or construction site to see that it has no uncorrected defects, kinks, or bends, which exceed the tolerances prescribed in the specifications, resulting from improper handling while in the mill or shop or in transit from mill to shop or shop to construction site.

2. Check the records or other evidence of welders' qualifications and investigate the continuity of their work since the date of qualification tests. Have requalification or supplementary check tests made of a welder's ability, if needed.

3. Ensure that the welding procedures and sequences are agreed to and understood by the inspector, the contractor, the foreman, and the welders performing the work. Make sure that the contractor has proper instructions regarding the number and type of procedure qualification tests required and that such tests are satisfactorily performed and recorded. Post the welding procedure data, such as amperage, voltage, and travel speed, at each welding machine.

4. Make a general examination of the structural steel and give particular attention to the quality of fabrication, including accuracy of plate edge preparation, that would affect control over welding. Require any necessary correction to be made before fitting of welded joints is done. Check the appearance and dimensions of shop welds and make sure that no welding has been done previously at unspecified locations. Record and call to the fabricator's attention any unspecified welding. Notify also the engineer so that he may specify corrective measures.

5. Check the fitting of joints that are to be welded, including dimensions of root face, angle of bevel, cleanliness, match marks, alignment of the parts to be joined, and uniformity and size of root openings. Recheck root faces and angles of bevel because trimming and rebeveling of plate edges is done sometimes during fitting. Check the prepared edges of the weld joints for evidence of possible undesirable internal defects such as laminations in the steel plate. Make dimensional checks of all critical measurements to assure a proper fit in the field.

6. Check the jigs, clamping, and precambering arrangements used in the fabrication assembly setup for adequacy. Make sure that tack welds are made by qualified welders and that the welds are small, smooth, and of specified quality. See that runoff or extension bars or plates are in place to ensure complete welding beyond the edges of the plates.

At Start of and During Welding

1. During inclement weather, see that suitable windbreaks or shields are provided and that welding is not done on surfaces that are wet or exposed to rain or snow. Check temperature of steel at start of and during welding to determine if the specified preheat and interpass temperature requirements are being observed. Use temperature-indicating crayons or other equivalent means to check these temperatures.

2. Check to make sure that the correct types and sizes of electrodes are available and that they are dried properly to prevent porosity in the final welds, especially if low-hydrogen electrodes are specified. If electrodes and fluxes have been stored improperly or exposed to humidity in excess of the tolerances prescribed in the specifications, require that they be reconditioned as prescribed by the specifications before being used unless the exposure is so great that reconditioning and use are forbidden by the specification.

3. Observe the technique and performance of each welder, at suitable intervals, to be sure that the approved welding procedures and suitable techniques are being used to conform to the requirements of the applicable specifications. At important joints, especially if some unusual condition warrants special attention, inspect multiple pass welds at more than one stage of progress. Arrange for the welder or the foreman to notify the inspector when such inspections at various stages are to be made.

4. Require all welding to be done by the approved procedures and sequences and make sure that electrodes are used with suitable currents and polarity and in positions for which the electrodes are intended to be used. Report any unusual or excessive distortion during welding and take corrective measures agreed to by the engineer and the fabricator to hold distortion and locked-in stresses to a minimum.

5. Require that the arc be struck only in the groove or other area on which metal is to be deposited and not at random on the base metal outside of the prepared joint, because arc strikes cause physical and metallurgical stress risers that can and often result in fatigue failures. Do not permit indiscriminate welding of ground bars, clips, and ties. Have approval for such welding given only by the engineer and only when unavoidable and done with the utmost care to eliminate re-entrants and to minimize restraint particularly in high-tension areas. When steel ground bars are used instead of ground clamps to carry the welding current to the base metal, make sure that the ground bars are carefully welded to the base metal at a runoff tab or a nonstress-carrying member without undercutting, so that, when removed, they leave no defects that would constitute notch effects or unsightly scars on the base metal.

6. Inspect root passes with special care because it is very important that the first welding deposited in the root of a multiple pass weld be made properly. Closely examine the root pass in important groove welds, such as butt welds in flanges and webs, to make sure that it has been made properly and is free from cracks.

7. Require the root pass and every subsequent weld pass to be cleaned by the use of a wire brush and chipping hammer to remove slag thoroughly between weld passes and to avoid inclusions, before the next succeeding weld pass is made. Have defects and substandard workmanship in any weld pass removed by chipping or gouging before subsequent passes of metal are deposited. Do not permit, however, peening or consolidating of weld metal by hammering without the special approval of the engineer. Do not permit under any circumstances peening on root passes or final surface passes of a weld. Under conditions of very severe restraint, minimize weld cracking by other more acceptable techniques, such as using a cascade buildup sequence, and avoid any interruptions in the welding of a critical joint other than those necessary to change electrodes and quickly clean the slag from a layer before the next one is deposited.

8. Take particular care not to create re-entrants or local areas with high residual stresses in highly stressed parts of principal members. Where beam flanges do not match well at butt welded splices, require that the weld metal be deposited in such a way as to provide a smooth transition between the parts being joined. Be certain that temporary fitting aids, such as plates and angles, are not applied at highly stressed locations and that temporary tack welds are not placed transverse to the direction of stress in main members.

9. Check occasionally to make sure that the welds are of proper size and length, are being made in the proper location to conform to the drawings, and are performed in such a manner as to produce weld metal conforming to the requirements of the specifications. To determine whether the weld metal is being deposited in such a manner as to penetrate well into the root of a joint without producing excessive slag inclusions or porosity, conduct a field test by making a T-joint with a fillet weld on only one side of the stem

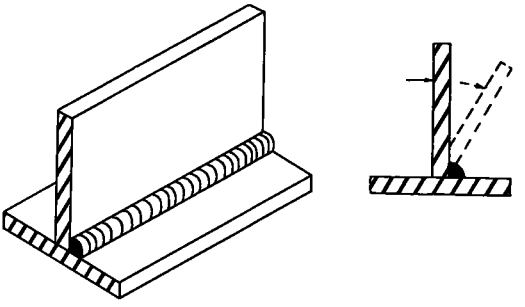

Figure 1. Fillet weld break test.

of the T; this joint can be broken open easily for visual examination, as shown in Figure 1. If welds are to be ground smooth and flush for any reason, have grinding done so that grinding marks are not left transverse to the direction of the main stress in a member. Check to make sure that welds are not being overground so as to produce a "dished" surface. Require that the ends of welds be ground smooth on removal of the runoff tabs.

10. Identify with paint each splice of an important member with the symbol of the welder doing the work, but do not steel stamp this identification on the member. If two welders work on such a splice, show the symbol of each and record in writing the work each man performed.

During Welding

Chapter 9 includes information that should be helpful to an inspector in preventing the occurrence of defects in arc welds in mild and low-alloy steels during welding and in correcting them if they do occur.

After Welding

1. Require welds to be cleaned of slag so that they can be given a thorough final examination. Be sure that the surfaces of the welds are reasonably smooth and of suitable contour without evidence of undercut, overlap, excessive convexity, insufficient throat or leg size, unfilled craters at the ends of welds, or other defects in excess of the limits prescribed by the specifications. Refer to photographs in Chapter 9 for the appearance of welds containing these various kinds of defects. Have all scars and defects, such as undercutting or remnant portions of tack welds and other scars that are left after the removal of temporary fitting and erection clips, corrected to be within the tolerances specified for the quality of the steel.

2. Make certain that the required radiographic, ultrasonic, magnetic-particle, or dye-penetrant tests are performed as specified. Check to see that the weld surfaces and adjacent plate surfaces are in satisfactory condition for the NDT process to be used.

3. If the specifications require certain qualifications for NDT equipment or for operators, check records or obtain evidence of acceptable qualifications. If there are no specific requirements, refer the matter to the engineer so that he may specify what tests are necessary to ensure the adequacy of the testing equipment.

4. Check the performance of NDT operators at frequent intervals to see that approved procedures are being used, that all weld joints to be tested are examined in accordance with specified requirements, and that results are properly recorded and identified.

5. Make certain that rejected welds are properly identified and marked for repair and that defect locations at the welds are clearly marked. Observe the excavation of defects to make sure that each defect is completely removed. For crack defects, use magnetic-particle tests to verify that no part of the defect remains. Require that repaired welds be inspected by the specified NDT method.

6. Check visually after blast-cleaning for weld surface defects and general pickup such as grinding welds, where required, grinding edges, and cleaning holes. In any event, make a final visual inspection check prior to painting.

7. If welds are not blast-cleaned prior to painting, require that all welded areas be neutralized with a solvent that will not interfere with the painting.

8. Check the loading, blocking, and handling of the welded members to avoid distortion or structural damage en route to the job site. Do not permit indiscriminate welding of shipping braces and lugs to the members.

2

Verification of Procedures and Qualifications of Welders

PROCEDURES

Shop drawings and design plans should clearly show any special features that are of critical importance to welding procedures and sequences. Sometimes, however, the details of these special features are not clearly shown, and sometimes, even if they are, existing conditions make it impossible to obtain satisfactory results by following them. In these situations, revised procedures must be established. If the joint to be welded is simple and conditions are normal, some parts of the welding procedure may be varied according to logic and economics within the limits prescribed by the specifications. If the joint to be welded is complicated and subject to severe biaxial shrinkage stresses during welding, variations in the parts of the welding procedure may be much more limited.

The design office may request that welding procedures and sequences be developed as part of the work on the project, and, if so, arrangements will have to be made if the contractor is to provide any assistance. The development and evaluation of special welding procedures are very costly and should be undertaken only in extraordinary cases.

The procedure and sequence for welding important or unusual joints, such as splices in very large girders, should be predetermined, if possible, and shown on the shop drawings or design plans. When this is not possible and the procedure and sequence are determined in the field, they should be described on the permanent record or as-built plans for future reference.

Because of their nature, some provisions of standardized welding procedures cannot be altered under any circumstances. Other provisions may be altered somewhat beyond the limits prescribed in the specifications if the acceptability of such changes is verified by means of procedure qualification tests.

QUALIFICATIONS OF WELDERS

The skill of the welder greatly affects the quality of the welding. The inspector should have evidence that the welder is qualified for the work that he is to do. This evidence should indicate the authority that gave the qualifying tests, the kinds of tests given, and, if the welder has a restricted qualification, the positions of the welds that he is qualified to make. The inspector should make sure that the authority administering the qualification tests to the welder is approved by the engineer.

Usually the specifications will permit a welder who is qualified in a more difficult welding position, such as vertical or overhead fillet welds, to perform welding in less difficult positions, such as flat and horizontal fillet welds. In certain localities, some of the available welders may have experience and be capable of producing high-quality welds in only one or two positions or only on certain types of joints. Moreover, new welders receive a part of their training in production work after having received preliminary training in welding schools or shop classes and passed qualification tests that may restrict the kind of welding they are to do. Therefore, some specifications and plans require, explicitly or implicitly, that the welder be qualified with respect to the quality required of the welding that he is to do. For example, a welder may be classified as being capable of making overhead welds in relatively unimportant joints but not be classified as being capable of making overhead welds in the more important joints.

In all cases, the evidence or records of the welder's qualifications should be reviewed by the inspector before welding is started to ascertain that he is qualified to do the welding that is to be assigned to him. If the welder has a restricted qualification,

he should be permitted to work only on the types of welds and positions of welding for which he has been qualified.

A welder who has qualification evidence may perform unsatisfactorily or may be forced for physical or other reasons to suspend his welding employment. The specifications usually require that a welder who has not been employed in the process of welding for which he has been qualified for a certain period, such as 3 months, must be requalified. If a welder's work appears to be below the requirements of the specifications, the inspector should first administer a simple field test, such as the T-joint test mentioned in Chapter 1. If the welder's ability still appears doubtful, the specifications usually indicate that complete requalification may be required.

Generally, the operators of automatic welding equipment must have the same qualifications as those of manual welders.

All qualification tests should be administered in conformance with the requirements of the pertinent welding specifications. The American Welding Society has published complete details of the qualification tests (6).

3
Interpretation of Drawings and Specifications

Although plans and specifications should have been thoroughly checked and usually are complete by the time a project has reached the construction stage, there is always a possibility that they have omissions or dimensional errors. Therefore, they should be checked to see that sufficient and correct information is given to complete the work properly.

The plans and specifications cannot always predict and cover clearly some conditions such as injury to the steel in handling and transportation, the effect of unusual weather conditions, and the effect of method of assembly or erection. The inspector should evaluate the effect of any such unusual conditions on the quality of the welding and reach an agreement with the contractor with regard to any necessary corrections or changes that should be made.

If the plans and specifications do not include complete information regarding the welding procedures and sequences for making important joints such as those in splices of beams or plate girders or those that may be subjected to an unusual amount of restraint during welding if the most suitable procedures and sequences are not used, additional detailed provisions may have to be developed and agreed to. In some welding processes that are permitted, the AWS Bridge Specifications do not contain complete essentials for a prequalified welding procedure as they do for shielded metal-arc welding. In such cases, the contractor must make procedure qualification tests, unless he has evidence that his proposed procedures have been qualified previously under acceptable supervision and inspection.

For various reasons, plans for a structure must sometimes be changed after construction work has started. In addition, the removal of material or parts of a structure and their replacement may alter welding conditions. In such cases, the inspector should analyze the conditions carefully to make sure that, if they affect the suitability of the welding procedures or sequences, proper revisions are agreed to in advance of the start of the welding on that portion of the structure. It may be necessary for him to refer such matters to the engineer for advice and guidance.

The workmanship clauses of welding specifications usually include information that can be used in interpreting drawings and in determining suitable dimensional tolerances for weld grooves and for the finished work. When inaccuracies in preparation of plate edges and in fitting at welded joints result in weld-groove dimensions that vary from those shown on the approved detail drawings by more than the specified workmanship tolerances, the matter must be referred to the engineer for approval or correction.

Parts to be joined by fillet welds should in no event be separated by more than $^3/_{16}$ in. If the separation is $^1/_{16}$ in. or greater, the leg of the fillet weld should be increased by the amount of the separation. However, the separation between faying (contact) surfaces of lap joints, or between a backing strip or structure and the plate surfaces of a butt joint, should in no case be greater than $^1/_{16}$ in.

The use of fillers should be prohibited, except as specified on the drawings or as approved by the engineer and installed in accordance with the requirements of the specifications that pertain to the use of fillers in splices. Otherwise, a filler might be used in such a way that it would be called on to transfer stress in a manner for which it is inadequate, and the joint might thereby be weakened.

4

Welding Procedures

The inspector of welded construction must determine that the welding procedures being used conform to the requirements and objectives of the specifications and are suitable for conditions that exist during the welding. The factors requiring attention are considered under the following general headings: (a) temperature and atmospheric effects, (b) base metal, (c) electrodes for manual welding, (d) electrodes and fluxes for automatic and semiautomatic welding, (e) choice of electrode classification, (f) welding procedures and their qualifications, and (g) alteration of procedures by qualification tests.

Although the effects of some departures from correct welding procedures will be evident during inspection immediately after welding, others will not be. The inspector should make sufficient observations of the welding operations to satisfy himself that approved procedures are being followed. The data included in this chapter are based on practical experience and on the provisions of various recognized welding specifications.

TEMPERATURE AND ATMOSPHERIC EFFECTS

Comfort of Welder

Structural specifications usually require that no welding be done when the ambient temperature is below 0 F because the discomfort of the welder and the impedance of his movements and dexterity by bulky clothing will result in poor workmanship. Welding is also prohibited in locations exposed to high wind because of its adverse effects on the welder and on the arc stability. Welding can be reliably done, however, in both cold and wind if the welder is suitably clothed and protected.

Temperature of Base Metal

The specifications also require that no welding be done when the temperature of the base metal is less than 32 F, even in cases where no preheat is specified. This requirement is based mainly on the fact that the welded joint cools more rapidly when the base metal is cold. When quenched and tempered alloy steel is used, maximum as well as minimum values must be imposed for preheat and interpass temperatures. This is discussed more fully later in this chapter.

It is especially important that base metal surfaces be thoroughly dry where weld metal is to be deposited by shielded metal-arc welding with low-hydrogen electrodes or by submerged arc welding. Further, the AWS Bridge Specifications require all mill scales to be removed from surfaces on which flange-to-web welds are to be made.

Several adjustments to a cold welding machine may be required while it is warming up so that a proper flow of current is obtained to suit the work and the electrode. When machines are cold, the decreased resistance permits greater-than-normal flow of current. During the warming period, the resistance to current flow increases with increasing temperatures. As the machines are used, the generated heat increases the resistance and causes a decrease in the output of welding current.

Electrodes and Granular Flux

Electrodes and flux are little affected by atmospheric temperatures, but they are affected by atmospheric humidity. They may pick up moisture from the atmosphere, and if the moisture is excessive, it will adversely affect the quality of the weld.

When excessive moisture is present, the water is broken down into its components, hydrogen and oxygen, in the intensely hot arc. The hydrogen is then in an atomic form,

and some of it will be readily absorbed in the hot molten metal and adjacent base metal. As the metal cools, most of the hydrogen escapes; but some of it may be retained in parts of the lattice structure of the steel, which may become supersaturated with hydrogen, particularly when the cooling rate is relatively high. It is believed that, on further cooling, this hydrogen reverts to molecular hydrogen under extremely high pressure. Internal stresses resulting from transformation, superimposed on weld shrinkage stresses, combine to stress the metal further during the latter stages of cooling. Consequently, underbead cracking may occur in the adjacent base metal or in the weld metal. Fractured surfaces of tension-test specimens exhibit small defects called fish-eyes at points where tiny hydrogen-filled voids existed. To preclude cracking, which might cause initiation of fracture, specifications provide special requirements for storage of electrodes and flux, for drying electrodes with low-hydrogen coatings if they have been exposed to a humid atmosphere, and for rejecting electrodes that have been wet. Flux fused in submerged arc welding may not be reclaimed and reused. These provisions are discussed later in this chapter.

Applied Heat

In this section and the rest of the sections in this chapter, the discussions pertain particularly to ordinary structural carbon steel. When quenched and tempered steel is involved, some statements may need to be modified.

When steel is heated to high temperatures, as in welding, metallurgical changes occur in the weld metal and the heat-affected zones. These changes must be taken into consideration in setting up welding procedures. Welding involves the fusion of metals, which in the case of steel occurs at a temperature of about 2,800 F. The thermal cycle produces significant changes in the grain structure of the steel, and therefore in its strength, ductility, hardness, and other properties.

At 120 F or somewhat higher, most structural steel materials are tougher than they are at 70 F and a great deal tougher than they are at comparatively low outdoor winter temperatures. This is one reason for use of preheat when cold-forming or welding of steel is to be done. Peening should not be done at very low temperatures, but there is also a maximum temperature above which peening can be detrimental. Research has shown that if cold work, such as peening, is done in temperatures between 400 and 900 F (known as the blue brittle range) or somewhat lower, the notch toughness or true ductility of structural steel material is lowered sometimes quite drastically. Therefore, unless any necessary bending, forming, peening, or other work of steel is done at a forging temperature, these operations should be carried out at warm or moderately hot temperatures no higher than about 200 F.

If steel is heated at a stress-relieving temperature from about 1,100 to 1,250 F, its ductility is increased and its yield point is decreased. If the steel material is subjected to stress at such temperatures, plastic flow will occur. Therefore, residual stresses may be reduced greatly by thermal stress relief in a furnace.

When a weldment is heated to such a stress-relieving temperature, the residual stresses may be reduced to an intensity of only 15 percent or less of their initial intensity in the as-welded condition, depending on the temperature, how long the weldment is held at that temperature, and the rate at which it is subsequently cooled. The longitudinal residual stresses caused by welding may reach an intensity of about 50,000 psi. If the weldment is reheated to a uniform temperature of about 1,200 F, the yield point of structural carbon steel will be lowered to about 10,000 to 17,000 psi. Consequently, an original residual stress of 50,000 psi may be reduced quite rapidly to the yield point that corresponds to the temperature of 1,200 F. Holding this temperature for one hour per inch of thickness (the usual requirement for stress relieving) will further reduce the residual stress, as a result of continued plastic flow, to perhaps 4,000 psi or less. Full benefits from such a heat treatment are obtained by allowing the assembly to cool slowly and uniformly in the furnace to about 600 F, or even as low as 200 F if the assembly is complex.

As steel is heated to temperatures above the stress-relieving range, various changes occur in its crystalline structure and its properties, depending on its chemistry, the

temperature to which it is heated, how long it is held at that temperature, whether or not it has received prior cold work or special heat treatment, and how rapidly it is cooled after being heated. The behavior of structural steel under such circumstances has been considered in determining the provisions for welding procedures that are prescribed in the specifications. If use is made of steel materials of higher carbon content or relatively high alloy contents, as compared with the structural steel materials covered by the AWS Bridge Specifications, it may be necessary to prescribe changes in the provisions for workmanship and welding procedures. These provisions should be based on an adequate knowledge of the metallurgical behavior of the steel material involved. Such detailed information is beyond the scope of this report, and only a few general facts are included in this discussion.

When steel is heated above its critical or transformation temperature, its grain size begins to enlarge, which results in a decrease in strength and ductility. The exact transformation temperature of the steel depends on its chemistry; for ordinary structural steel, it is near 1,600 F. The degree of grain-size enlargement depends on the temperature to which the steel has been heated, and how long it is before the steel cools again down through the transformation temperature. During welding, the steel reaches a temperature of 2,800 F or higher. Therefore, there is an opportunity for enlargement of grain size.

A single pass weld, such as a fillet weld, has a cast structure with relatively large grain size. However, it possesses good mechanical properties, largely because the carbon content of the weld metal is quite low and because it is a highly refined metal when welding is done properly. In multiple pass welds made without excessive thickness of layers, the deposition of each succeeding pass reheats the previous pass or layer of weld metal and thus improves its ductility.

Rate of Cooling

The rate at which a weld or a piece of steel is cooled exerts an important influence on its strength, hardness, ductility, and other properties. In practice, one need not be concerned about a welded joint cooling too slowly. If a welded joint cools too rapidly, however, the material may become relatively hard and brittle; and the metal may crack under the forces exerted by the weld shrinkage, especially if the joint is subjected to severe restraint against shrinkage.

When a piece of steel is heated to a high temperature and is then sprayed with water or immersed in water or oil to rapidly reduce its temperature, it is said to be quenched. When the base metal or parts of a jig adjacent to a welded joint are very cold, they can cause a somewhat similar quenching action. Consequently, the material of the joint hardens or tends to harden to a degree that depends on its carbon and alloy content and on the severity of the quenching.

A slower rate of cooling provides good strength and suitable grain structure without excessive hardening. For example, if a piece of ordinary structural steel or a steel forging or casting is heated to just above its transformation temperature and is held at that temperature for awhile and then allowed to cool in still air, it develops these desirable properties and is said to be in the normalized condition.

Plates and rolled shapes are sometimes specified to be supplied in the normalized condition for decks of bridges subjected to very cold winter temperatures. The rate of cooling involved in properly controlled finishing operations in the steel mill results in excellent properties for the structural steel material. Weldments are seldom given such a normalizing treatment because (a) it is not necessary in the case of bridge structures, and (b) when an assembly is raised to the normalizing temperature, the yield point of the steel becomes so low that to maintain the original geometry or shape of the structure and to avoid serious distortion in the furnace become most difficult.

A heat treatment similar to normalizing is actually accomplished to some degree during most welding operations. The weld metal and adjacent base metal are heated well above the transformation temperature during welding, and in most cases the metal cools at a moderate rate. Even the first bead of a multiple-layer weld deposited on cold thick material, and thus chilled rapidly, is reheated by the deposition of the next

layer of welding. Following this, the reheated metal will cool at only a moderately rapid rate. The thickness of each layer is important, and in manual welding should not be greater than an eighth of an inch. Otherwise, the entire thickness of the layer will not be reheated sufficiently by the subsequent welding to bring it up to a normalizing temperature.

Carbon Content

The chemistry of the steel, especially the carbon content, will determine the amount of undesirable hardening that may occur as a result of very rapid cooling or quenching from a temperature above the transformation range of the steel material. The greater the carbon content, the higher will be the hardness. The tensile strength of steel is roughly a function of its hardness. The strength of structural steel may be expressed roughly as 500 times the Brinell hardness number. Increased hardness tends to make the steel less ductile and more brittle, especially when cooled at the rapid rates involved in making small weld passes on heavy material. Therefore, there is a limit to the permissible carbon content for a structural steel material that is to be welded.

In the structural steel plate material of ASTM Specification A 36, carbon is limited to a maximum of 0.25 to 0.29 percent by ladle analysis and 0.29 to 0.33 by check analysis, depending on the thickness of the material. The higher percentage of this range is close to the practical limits for welds having characteristics suitable for structural work. The carbon content of steel must be increased somewhat as thickness increases in order to meet production economy and strength requirements. Moreover, welds on thick material cool faster after welding than welds on thin material. Therefore, some means must be provided to ensure that the weld and heat-affected zone hardness do not exceed reasonable limits and that the welded joint will not tend to develop shrinkage cracks. This is why preheat and the use of low-hydrogen electrodes are required for the welding of relatively thick material.

Practical means are available for reducing hardness when it becomes necessary to do so. The rate of cooling after welding may be retarded by the use of preheating, or after welding the work may be given a stress-relief heat treatment in a furnace. Although stress relieving at 1,100 to 1,200 F will reduce any excessive hardness to acceptable levels, this kind of heat treatment is not usually practical for bridge structures or their members. Further, such subsequent heat treatment will not remove shrinkage cracks that may have occurred during rapid cooling of welded joints. The most practical method for preventing excessive hardness and shrinkage cracks is to use preheat when excessive cooling rates would otherwise occur.

Preheating

The heating of materials both prior to and during the welding operation reduces the rate of cooling, with the result that hardness can be controlled at an acceptable level. Table 1 gives the requirements of the AWS Bridge Specifications of 1969 for preheat and interpass temperatures for welding various structural materials of various thicknesses. One should proceed with caution in adopting structural steel materials other than those tabulated. It may be necessary to use higher preheat and interpass temperatures, depending on the chemistry and heat treatment, if any. In any event, the welding procedures for such steels should be specially qualified.

Preheating and controlling interpass temperature usually consist of raising the temperature of the work and maintaining this temperature about that specified so that, after welding, the deposited weld metal will cool at a sufficiently slow rate to ensure that excessive hardening does not occur. This may be accomplished in a satisfactory manner by any one of the following methods.

1. Place the work in a furnance and raise the temperature of the entire mass up to the desired level. This is seldom done in structural or bridge work.
2. Raise the temperature of a band of metal 6 to 12 in. wide on each side of the joint to the desired temperature by heating with gas flames, induction heating, or some other means.

TABLE 1

MINIMUM PREHEAT AND INTERPASS TEMPERATURE

Welding Process	ASTM Specification	Grade	Temperature, F, by Thickness of Thickest Part at Point of Welding			
			¾ in and under	Over ¾ to 1½ in	Over 1½ to 2½ in	Over 2½ in
Shielded metal-arc with other than low-hydrogen electrodes	A 36		None[a]	150	225	300
	A 53	B	None[a]	150	225	300
	A 375		None[a]	150	225	300
	A 500		None[a]	150	225	300
	A 501		None[a]	150	225	300
	A 529		None[a]	150	225	300
	A 570	D, E	None[a]	150	225	300
Shielded metal-arc with low-hydrogen electrodes, Submerged arc, Gas metal-arc, or Flux cored arc	A 36		None[a]	70	150	225
	A 242	Weldable	None[a]	70	150	225
	A 375		None[a]	70	150	225
	A 441		None[a]	70	150	225
	A 529		None[a]	70	150	225
	A 570	D, E	None[a]	70	150	225
	A 572	42, 45, 50	None[a]	70	150	225
	A 588		None[a]	70	150	225
	A 572	55, 60, 65	70	150	225	300
Shielded metal-arc with low-hydrogen electrodes, Gas metal-arc, or Flux cored arc	A 514		50	125	175	225
Submerged arc, carbon or alloy steel wire, neutral flux	A 514		50	125	175	225
Submerged arc, carbon steel wire, alloy flux	A 514		50	200	300	400

[a]When the base metal temperature is below 32 F, preheat the base metal to at least 70 F and maintain this minimum temperature during welding

Note Welding shall not be done when the ambient temperature is lower than 0 F When the base metal is below the temperature listed for the welding process being used and the thickness of material being welded, it shall be preheated (except as otherwise provided) in such manner that the surface of the parts on which welo metal is being deposited are at or above the specified minimum temperature for a distance equal to the thickness of the part being welded, but not less than 3 in , both laterally and in advance of the welding Preheat and interpass temperatures must be sufficient to prevent crack formation Temperature above the minimum shown may be required for highly restrained weld For A 514 steel, the maximum preheat and interpass temperature shall not exceed 400 F for thickness up to 1½ in inclusive and 450 F for greater thicknesses

3. Raise the temperature of a band of metal about 6 to 12 in. wide and about 2 ft long on each side of the joint, and then weld by following a cascading or block sequence so that each of one or more preceding passes will be covered immediately by the deposition of the hot weld metal of a subsequent pass, thus building up and maintaining enough heat at each point to prevent an excessive rate of cooling.

Measurement of temperature may be done easily by means of temperature-indicating crayons or pellets that will melt at a known temperature. A high degree of accuracy is not usually required for welded bridges and buildings. If temperature is to be roughly determined in the field and no facilities for doing so are available, the information given in Table 2 should be helpful. More accurate control may be needed, however, to preclude excessive temperatures for A-514 steel (see note to Table 1).

Except for quenched and tempered steels, judgment has to be exercised in determining requirements for preheating under various conditions. The minimum preheat and interpass temperature tables in this report and the AWS Bridge Specifications (6) are quite thorough guides, but they can only provide landmarks about which an inspector can orient his judgment. It would be desirable to have a chart or preferably a table, in the case of specifications, that would prescribe intermediate degrees of minimum preheat and interpass temperatures for thicknesses of material so that, if the base metal is at a suitable temperature to preclude excessive rates of cooling, no additional preheat would have to be added.

TABLE 2

GUIDES FOR ESTIMATING TEMPERATURES IN THE FIELD

Temperature, F	Guide
140	The bare hand may be held in firm contact for a maximum of 10 sec
212	Water will boil
400	Soft wood will char

Immediate Post-Heating

Another method for preventing excessive cool rate in a welding joint is to

TABLE 3

HOLDING TIME FOR STRESS-RELIEVING OF WELDED VESSELS

Metal Temperature, F	Holding Time, hr per in of Thickness	Metal Temperature, F	Holding Time, hr per in of Thickness
1,100	1	950	5
1,050	2	900	10
1,000	3		

post-heat immediately following the welding before the joint has cooled very much. This is usually more costly and less convenient than preheating. Research has indicated that preheating is at least equally as effective as post-heating and apparently somewhat more reliable for preventing cracking or loss of notch toughness caused by excessive cooling rates. Therefore, post-heating is not used much in structural work.

Stress-Relief Heat Treatment

Stress-relief heat treatment is seldom required for structural weldments. The specifications make provisions for stress relief, however, because some contract plans or specifications require it. Large welded pedestals, bearing shoes, and rockers for piers and abutments may require stress relief to provide dimensional stability during and after machining. The assembly must be adequately supported during stress relieving. The temperature of the assembly should be maintained uniformly through the furnace during heating and cooling so that no 2 points on the assembly will differ by more than 100 F at any time. When a mean temperature range between 1,100 and 1,200 F (a maximum of 1,100 F for A-514 steel) has been reached, the temperature of the assembly is held within that range for 1 hour per inch of thickness of the thickest part. When the assembly has cooled to 600 F, it may be removed from the furnace and allowed to cool in still air, unless cooling in the furnace to a lower temperature is required to prevent distortion.

Although it is preferable to stress relieve at 1,000 to 1,100 F, under certain circumstances the attainment of a temperature of 1,100 to 1,200 F may be impractical. Alternative provisions are therefore provided by the AWS Bridge Specifications (Table 3). Stress relieving of A-514 steel weldments is not generally required unless dimensional stability during machining is the objective. The results of notch-toughness tests show that post-weld heat treatment of A-514 weldments may impair toughness and may result in grain coarsening and intergranular cracking.

BASE METAL

ASTM Specification A 36 has now replaced specifications for older ordinary carbon structural steel. The chemistry of this steel has been developed to provide better weldability and improved notch toughness, as compared to the previous A-7 steel, chiefly by limiting the carbon content and by prescribing ranges of manganese content that will result in a higher and more favorable manganese-to-carbon ratio. The chemistry specified for plate material and shapes is given in Table 4. For bars and bar shapes, the permissible carbon runs somewhat higher and the manganese somewhat lower. If base metals other than A-36 steel are to be used, the scope clauses of the specifications should be carefully read because they sometimes contain important statements regarding weldability or notch toughness. Even A-36 steel is sometimes specified to be silicon killed fine grain practice to ensure improved notch toughness. The AWS Bridge Specifications do not include the 3 grades of A-572 steel of highest strength. In some ASTM specifications for structural steel, various types or grades are tabulated with varying chemical compositions that represent the products furnished by various producers. If the designer prefers the chemistry of some of these grades or types, he can designate one or more grades or types as acceptable.

TABLE 4

CHEMICAL REQUIREMENTS FOR A-36 STEEL

Thickness, in	Analysis	Allowable Percentage					
		C[a]	Mn	P[a]	S[a]	Si	Cu[b]
Plates							
¾ and under	Ladle	0 25	—	0 04	0 05	—	0 20
	Check	0 29	—	0 05	0 063	—	0 18
Over ¼ to 1½	Ladle	0 25	0 80 to 1 20	0 04	0 05	—	0 20
	Check	0 29	0 75 to 1 25	0 05	0 063	—	0 18
Over 1½ to 2½	Ladle	0 26	0 80 to 1 20	0 04	0 05	0 15 to 0 30	0 20
	Check	0 30	0 75 to 1 25	0 05	0 063	0 13 to 0 33	0 18
Over 2½ to 4	Ladle	0 27	0 85 to 1 20	0 04	0 050	0 15 to 0 30	0 20
	Check	0 31	0 80 to 1 25	0 05	0 063	0 13 to 0 33	0 18
Over 4	Ladle	0 29	0 85 to 1 20	0 04	0 050	0.15 to 0 30	0 20
	Check	0 33	0 80 to 1 25	0 05	0 063	0 13 to 0 33	0 18
Shapes[c]							
All	Ladle	0.26	—	0 04	0 05	—	0 20
	Check	0 30	—	0 05	0 063	—	0 18

[a]Maximum [b]Minimum when copper steel is specified
[c]Silicon content of 0 15 to 0 30 percent is required for shapes over 426 lb/ft

ELECTRODES FOR MANUAL WELDING

Classification

Electrodes for manual welding are divided into classes by the AWS (7), and each manufacturer must state the classification into which each of his electrode types falls. This has considerably simplified the choice of electrodes for various uses because the classification numbering system for the mild steel electrodes is quite simple. The first 2 numbers refer to tensile strength, the second 2 numbers refer to usability. Thus, in an electrode classification number E6010, E refers to electric arc-welding, 60 refers to a minimum tensile strength of 60,000 psi for the deposited weld metal, and 10 refers to the type of coating and resulting usability.

The tensile strength of the deposited weld metal varies in different classifications of covered electrodes from a minimum of 60,000 psi to 120,000 psi. For the welding of structural carbon steel for bridges, however, mild steel arc-welding electrodes classed in the E60 and E70 series are commonly accepted as providing sufficient tensile strength and ductility to meet the requirement of full-strength joint development. Some electrodes within these groups are more suitable than others. A comparison is given in Table 5.

TABLE 5

CHARACTERISTICS OF COVERED ELECTRODES FOR ARC WELDING OF MILD STEEL

Electrode Classification	General Type of Coating	Welding Position	Type of Current[a]	Quality of Weld Metal
E6010	High-cellulose sodium	All	DCRP	High
E6011	High-cellulose potassium	All	AC or DCRP	High
E6012	High-titania sodium	All	DCSP or AC	Medium high
E6013	High-titania potassium	All	AC or DCSP	Medium high
E7014	Iron powder, titania	All	AC or DC	Medium high
E7015	Low-hydrogen sodium	All	DCRP	Excellent
E7016	Low-hydrogen potassium	All	AC or DCRP	Excellent
E7018	Iron powder, low hydrogen	All	AC or DCRP	Excellent
E6020	High-iron oxide	H-fillets Flat	AC or DCSP AC or DC	High
E7024	Iron powder, titania	H-fillets and flat	AC or DC	Medium high
E6027	Iron powder, iron oxide	H-fillets Flat	AC or DCSP AC or DC	High
E7028	Iron powder, low hydrogen	H-fillets and flat	AC or DCRP	Excellent

[a]Electrodes usable with ac are usually usable with dc also

Current Ranges

Suitable ranges of welding current vary with the type of electrodes, the diameter of the core wire, the position of welding, the thickness of material, and other joint characteristics. A current too low may cause poor fusion and inadequate penetration, gas and slag inclusions, and poor appearance of weld surface. A current too high may cause excessive spatter, undercut, overlap, and excessive penetration or melting through the base metal at the root of the joint. It may also cause localized distortion. Welding settings can usually be used only as a rather rough guide unless they have been calibrated or allowances are made for variations in characteristics and length of welding cable leads, and even then imperfect connections or splices can exert an important influence. An experienced welder can readily adjust a welding machine to produce the proper output of current at the arc because while he is welding he can tell whether the current is proper. An experienced welding inspector should also be able to judge welding conditions in a similar manner. If he lacks this experience, he may use the welding current ranges given in Table 6 as a guide to determining whether the actual welding current, as measured by means of an ammeter or tong meter, is suitable.

Arc Voltage

Arc voltage is related directly to arc length, which must be controlled within relatively narrow limits. Excessive arc length should always be avoided, particularly while using low-hydrogen electrodes, when the arc must be maintained at the shortest possible length without actually dipping the end of the electrode into the molten pool. Longer arc length can result in gross porosity.

Storage and Drying

Excessive moisture in the coatings on the electrodes will adversely affect the quality of the weld because of the hydrogen that is derived from this moisture during welding. The moisture in the coatings may be absorbed from the atmosphere or combined as water of crystallization in the constitutents of the coating. If electrodes are not properly baked, moisture could be present as a residual after manufacturing. Reliable producers of electrodes, however, bake them after extrusion, generally at the maximum temperature that the coating will stand without risk of damage or deterioration. The electrodes are then packaged in containers that provide at least some protection from absorption of moisture from the air. Packaged electrodes should be stored in a dry warm room and loose electrodes should be stored in drying bins that are kept at a minimum temperature of 250 F.

Low-hydrogen electrodes have coverings that are low in hydrogen-producing constitutents, and special precautions are taken in their manufacturing and packaging to

TABLE 6

TYPICAL CURRENT RANGES FOR MILD STEEL ELECTRODES

Electrode Diameter (in.)	Current Range, amp, by Electrode Classification								
	E6010 E6011	E6012	E6013	E6020	E6027	E7014	E7015 E7016	E7018	E7024 E7028
1/16	—	20 to 40	20 to 40	—	—	—	—	—	—
5/64	—	25 to 60	25 to 60	—	—	—	—	—	—
3/32	40 to 80	35 to 85	45 to 90	—	—	80 to 125	65 to 110	70 to 100	100 to 145[a]
1/8	75 to 125	80 to 140	80 to 130	100 to 150	125 to 185	110 to 160	100 to 150	115 to 165	140 to 190
5/32	110 to 170	110 to 190	105 to 180	130 to 190	160 to 240	150 to 210	140 to 200	150 to 220	180 to 250
3/16	140 to 215	140 to 240	150 to 230	175 to 250	210 to 300	200 to 275	180 to 255	200 to 275	230 to 305
7/32	170 to 250	200 to 320	210 to 300	225 to 310	250 to 350	260 to 340	240 to 320	260 to 340	275 to 365
1/4	210 to 320	250 to 400	250 to 350	275 to 375	300 to 420	330 to 415	300 to 390	315 to 400	335 to 430
5/16	275 to 425	300 to 500	320 to 430	340 to 450	375 to 475	390 to 500	375 to 475	375 to 470	400 to 525[a]

[a]These values do not apply to the E7028 class

Note These current ranges are satisfactory for most electrode classes For welding vertically upward, currents near the lower limit of the range are generally used

maintain a low content of free and combined moisture. If they absorb any appreciable amount of moisture from the atmosphere, they no longer function as low-hydrogen electrodes. If low-hydrogen electrodes of the E70 series have not been shipped in sound hermetically sealed containers or have been left exposed to the atmosphere for than 4 hours (or for more than 1 hour when the relative humidity is 75 percent or greater), they must be dried by heating to a temperature between 450 and 500 F for at least 2 hours to ensure proper functioning. Electrodes that have become wet are not permitted to be used for welding. More stringent requirements and much higher redrying temperatures are prescribed by the AWS Bridge Specifications for low-hydrogen electrodes in the classes of higher strengths.

ELECTRODE AND FLUX FOR AUTOMATIC AND SEMIAUTOMATIC WELDING

AWS specifications are now available for the following electrodes and fluxes used in automatic and semiautomatic welding: bare mild steel electrodes and fluxes for submerged arc welding (8), mild steel electrodes for gas-metal arc welding (9), and mild steel electrodes for flux cored arc welding (10). The American Society for Testing and Materials (ASTM) has now released all responsibility for electrode specifications to AWS and, consequently, the former ASTM designations have been dropped. The AWS Bridge Specifications require conformance to these filler metal specifications where they are applicable.

As of the publication of this Report and of the AWS Bridge Specifications of 1969, the AWS specifications for electrodes for the various automatic and semiautomatic welding processes did not include specifications for low-alloy steel electrodes or even for mild steel electrodes for electroslag and electrogas welding. The AWS Bridge Specifications, however, include provisions for the demonstration of specified mechanical properties of low-alloy weld metal with tensile strength levels of 80,000, 90,000, 100,000, and 110,000 psi for submerged arc, gas metal-arc, and flux cored arc welding. These properties include tensile strength, yield strength, elongation in 2 in., and a required 20 ft-lb Charpy V-notch impact strength at 0 F.

In the absence of any standard AWS electrode specifications for electroslag and electrogas welding, the AWS Bridge Specifications include test requirements to demonstrate specified requirements for tensile strength, yield strength, and elongation in 2 in. of weld metal for welding various thicknesses of the various base metals. The AWS Bridge Specifications make provisions for cleanliness and dryness of flux for submerged arc welding and for electroslag welding, and for redrying at 250 F for 1 hour in case the flux has not remained in unopened and undamaged packages prior to the time it is placed in the dispensing system of the welding machines. Flux that is fused in welding or that has been wet is not permitted to be reclaimed and used.

After a coil of electrode wire for gas metal-arc welding, for flux cored arc welding, or for electroslag or electrogas welding has been removed from its original package, it must be protected or stored so that its characteristics and welding properties are not impaired. Wire that is rusty may not be used. Consumable guide tubes must be clean and dry.

CHOICE OF ELECTRODE CLASSIFICATION

Most specifications permit the use of non low-hydrogen electrodes for the welding of structural carbon steels in thicknesses no greater than 1 in.; but for thicknesses between ¾ and 1 in., a preheat of 150 F is required. When a low-hydrogen welding process, either manual, semiautomatic, or automatic, is used for these thicknesses, a minimum base metal temperature of 70 F is required. Therefore, in many cases, it will be expedient to use low-hydrogen electrodes or welding processes for all bridge work and thus simplify control and inspection.

Likewise, although electrodes with tensile strength levels of 60,000 psi are permitted in welding A-500, grade A, base metal, it may often be expedient, when very high strength steels such as A-514 are not involved, to simply specify by a special supplement or by a general note on the plans appropriate specific classifications of low-hydrogen electrodes with tensile strength levels of 70,000 psi or electrode-flux combi-

nations that are to be used throughout the contract work. The specific classification should be determined on the basis of design requirements for impact strength in some cases and tensile properties.

When A-514 steel base metal, quenched and tempered, is used and especially when thicknesses of 2½ in. or more or less are involved along with lower strength base metals, the designation of suitable classifications of electrodes becomes rather complex. Because design considerations are involved in the choice, the classifications to be used should be indicated on the design drawings and on the shop drawings.

The bridge designer may have to obtain information from several parts of the AWS Bridge Specifications to determine the electrode requirements for various base metals. Tables 1 and 7 will provide most of the information needed. The designer may also find in the AWS Bridge Specifications (6, Table 1) the strength level of the electrode that should be specified for a given welded joint in a "matching" base metal to be consistent with the allowable unit stresses in the welds. The electrode requirements for electrogas and electroslag welding are covered in a separate part of the AWS Bridge Specifications (6, Article 422, Part V, Section 4).

The filler metal requirements given in Table 7 are intended to ensure only that the tensile strength of the welded joint will be high enough to develop the full tensile strength of the base metal. The appropriate specific electrode classification and flux, if involved, for a particular application, must be determined by the designer on the basis of the design requirements, including the requirements with regard to ductility and, in some cases, low-temperature impact resistance on notch toughness.

Some of the AWS specifications for electrodes carry no mechanical property requirements, other than those for tensile strength, and are not intended for the welding of members of bridges. Therefore, it is not sufficient for the designer to require only that the electrodes conform to a certain AWS specification. He must also designate the appropriate specific classification of electrode to be used for each application. To do this, he must consult the electrode specification tables that state the requirements of each classification with regard to mechanical properties, impact properties, and tests.

TABLE 7

FILLER METAL REQUIREMENTS FOR COMPLETE PENETRATION BUTT WELDS

Welding Process[a, b]	Base Metal[c] (ASTM Specification)	AWS Specification	Classification		
			Electrode	Flux	Combination
Shielded metal-arc	A 36, A 500, A 501	A 5 1, A 5 5	E60xx, E70xx[d]		
	A 441, A 572 grades 42 through 50,				
	A 588[d, e]	A 5 1, A 5 5	E70xx[f]		
	A 514	A 5 5	E110xx[f]		
Submerged arc	A 36, A 500, A 501	A 5 17		F6x	F7x-Exxx
	A 441, A 572 grades 42 through 50,				
	A 588[d, e]	A 5 17			F7x-Exxx
	A 514	—		F110	
Gas metal-arc	A 36, A 500, A 501	A 5 18	E70X-x, E70U-1		
	A 441, A 572 grades 42 through 50,				
	A 588[d, e]	A 5 18	E70S-x, E70U-1		
	A 514	—	E110S		
Flux cored arc	A 36, A 500, A 501	A 5 20	E60T-x, E70T-x[g]		
	A 441, A 572 grades 42 through 50,				
	A 588[d, e]	A 5 20	E70T-x[g]		
	A 514	—	E110T		

[a]When welds are to be stress relieved the deposited weld metal shall not exceed 0 05 percent vanadium

[b]See AWS Bridge Specifications (6, Article 422) for electroslag and electrogas weld metal requirements

[c]In joints involving base metals of different yield points or strength filler metal applicable to the lower strength base metal may be used

[d]Only low hydrogen electrodes shall be used for welding A 36 steel more than 1 in thick

[e]For architectural exposed bare unpainted applications, the deposited weld metal shall have similar atmospheric corrosion resistance and coloring characteristics as the base metal used The steel producer's recommendation shall be followed

[f]Low hydrogen classifications

[g]Except E70T 2 and E70T 3

Note Use of same type filler metal having next higher mechanical properties as listed in AWS Specification is permitted

It would seem to be inappropriate to designate classifications of filler metal that carry special low-temperature impact requirements for welding base metals that cannot reasonably be expected to provide comparable properties or characteristics. Some of the newer ASTM specifications for structural steel materials that might not normally be expected to provide such low-temperature notch toughness or impact properties carry statements in their scope clauses advising the user that supplementary provisions may be added, such as the requirement that A-36 steel be silicon killed fine grain practice or the special requirements for A-572 steel that may be negotiated between the purchaser and the producer.

WELDING PROCEDURES AND THEIR QUALIFICATION

Shielded Metal-Arc Welding

Various clauses of the AWS Bridge Specifications relating to the proportions of groove welds and to workmanship, technique, electrodes, and procedures for the shielded metal-arc welding process constitute complete prequalified welding procedures for that process. The AWS Bridge Specifications also contain the requirements for the various base metals and the mild steel (7) or the low-alloy steel (11) covered arc-welding electrodes used. The Specifications for electrodes contain tables of welding current ranges for the various sizes and classes of covered electrodes (Table 6). If the contractor's proposed welding procedures for the shielded metal-arc welding process conform in all respects to the provisions in the Specifications, it is not necessary for him to perform the welding procedure qualification tests of the AWS Bridge Specifications (6, Appendix D).

Submerged Arc Welding

The various clauses of the AWS Bridge Specifications relating to submerged arc welding also constitute almost complete prequalified welding procedures for welding the various approved base metals. They must be supplemented, however, by certain prescribed tests made by the contractor.

If a certain type of joint requires specific root penetration that cannot be checked by visual inspection during the welding, the contractor is required to make a sample joint and macroetched cross section to demonstrate that the welding procedure proposed for use will attain the required root penetration and fusion. Alternatively, the engineer, at his discretion, may accept a radiograph of such a test joint or evidence on record.

The general requirements of the specification for submerged arc welding procedures are not suitable in all respects for welding A-514 steel materials. It is recommended in the AWS Bridge Specifications that the recommendations of the supplier of the A-514 steel material be followed with respect to maximum permissible heat input and preheat combinations, which must include the additional heat input produced in simultaneous welding on 2 sides of a common member, for example, joining the web of a girder to one of its flanges. Some bridge engineers may be reluctant to accept recommendations from a commercial supplier of materials in lieu of procedure qualification. The recommendations of a responsible research and development department of the producer of the A-514 steel being used, however, would surely merit consideration.

Tests will also be required for the acceptance of electrode and flux combinations for welding high-strength low-alloy base metals. AWS has not yet published a specification for high-strength low-alloy electrodes and flux for submerged arc welding. When the specification is published, a certification from the manufacturer that these materials conform to the specification requirements should be acceptable in the same way that such certifications are commonly accepted by bridge engineers where AWS electrode specifications are already in force.

The welding procedure clauses of the AWS Bridge Specifications for submerged arc welding cover the use of both single and multiple electrodes.

The AWS Bridge Specifications require that neither the depth nor the maximum width, in cross section, of the molten and solidified mold metal of each pass (sometimes

called the weld nugget) shall exceed the width at the surface of the weld pass. The long experience on which this requirement is based shows that when this provision is violated there is a strong probability that ingot-type cracking will result because of internal shrinkage during cooling. The engineer may waive this requirement if testing to his satisfaction has been done to demonstrate that the welding procedure producing this shape of weld deposit does not result in cracking. In determining what constitutes satisfactory test evidence, the engineer should consider that a single demonstration could hardly be deemed sufficient because the weld might be on the threshold of cracking, and a second or third demonstration might result in cracking. Also, the restraint against shrinkage of a weld in an actual structure may be considerably greater than that of a weld in a conventional test plate.

As a precaution against cracking, the AWS Bridge Specifications (6, Article 414) further provide that the maximum welding current for making a pass with a single electrode in a groove weld, which has fusion to both faces or sides of the groove, shall be 600 amp except that the surface layer may be made using a higher current. Likewise, in depositing a fillet weld where the included dihedral angle is 90 deg even for the surface pass, the maximum current permitted is 1,000 amp.

The corresponding limitations stated in the specifications for welding current in making groove welds with multiple electrodes are (a) 700 amp for any single electrode or for any parallel electrodes when making a root pass that does not fill the groove in a groove having no root opening; (b) 750 amp for any single electrode or 900 amp for any parallel electrode (electrically in parallel) when making the root layer in a groove having steel backing or a spacer bar; and (c) 1,000 amp for any single electrode or 1,200 amp for any parallel electrode when making all other passes except the final or surface layer. No limitation is specified for the final or surface layer.

For making a fillet weld with a parallel electrode, the maximum permitted current is 1,200 amp.

The engineer may require that a sample joint having the same cross section as the joint to be used in construction and a length of at least 1 ft be made by the identical welding procedure that is proposed for use in construction. A macroetched cross section of this welded joint is then prepared to demonstrate that the cross-sectional shape of the weld nugget meets the specification requirements, that the weld is free from cracks, that there is complete fusion with adjacent base metal and weld metal, that there are no depressions or undue undercutting, and that the initial or intermediate passes have no excessive concavity, which might result in cracking, especially in roots of joints under restraint.

The AWS Bridge Specifications define acceptable means for sealing roots of groove or fillet welds to prevent melting through. They provide also that multiple-arc welds may be made in these roots by using a combination of gas metal-arc welding followed by multiple submerged arcs, provided that the arc of the gas metal-arc welding precedes the first submerged arc by at least 15 in. In some cases, multiple gas metal-arc welding arcs have been used for this purpose.

For submerged arc welding of single pass grooves the AWS Bridge Specifications provide that the engineer may choose not to follow the requirements given in Table 1 for preheat and interpass temperatures. Instead, he may permit the preheat and interpass temperature requirements to be established by special procedure qualification tests described in the Specifications and involving the determination of Vickers hardness numbers.

Experience has shown that it is especially important in submerged arc welding to provide clean and thoroughly dry surfaces where the welding is to be done. All mill scale must be removed from surfaces on which flange-to-web welds are to be made by submerged arc weldings or with low-hydrogen electrodes. It is often necessary to carry a heating flame just ahead of the submerged arc welding head.

Gas Metal-Arc and Flux Cored Arc Welding

Although the gas metal-arc and flux cored arc welding processes have been used for quite a number of years in structural fabrications, the Structural Welding Committee

of the American Welding Society, which prepares the AWS Bridge Specifications, has necessarily devoted most of its time to matters that have been demanding attention for a longer period of time. These include developing complete procedures for submerged arc welding with multiple electrodes. The Committee has not yet prepared prequalified welding procedures, including prequalified welded joint details, for gas metal-arc welding and flux cored arc welding, although practices for using these processes have become quite uniformly established in many steel fabricating shops.

Until prequalified procedures are prepared for these processes, each user must prepare a proposed procedure specification and qualify each procedure to be used, according to the requirements of the AWS Bridge Specifications (6, Appendix D). For each joint to be used in construction, the full details of the welding procedures must be defined in the procedure specification. The engineer may accept evidence of previous qualification instead of that from tests made under his supervision. The AWS Bridge Specifications contain some specific workmanship and technique requirements that relate to procedures for gas metal-arc welding and flux cored arc welding and that, presumably, must be enforced without change, regardless of whether a contractor wishes to alter them by procedure qualification.

Electroslag and Electrogas Welding

The requirements for qualification of procedures for electroslag and electrogas welding are similar to those that have been described for gas metal-arc and flux cored arc welding. The American Welding Society, however, does not yet have standard specifications for filler metal (electrodes, flux, and shielding gas) even for welding structural carbon or mild steel by these processes. Therefore, the filler metal proposed for use, as well as the welding procedures, must be qualified in accordance with the provisions of the AWS Bridge Specifications (6, Appendix D). When required by the contract plans and specifications, impact tests must be included in the welding procedure qualification and made in accordance with the provisions of the AWS Bridge Specifications (6, Appendix K). The engineer may accept evidence of previous qualifications and tests.

The AWS Bridge Specifications prohibit the use of the electroslag and electrogas processes for welding special heat-treated steels, such as A-514, because the heat input is so great that it would likely annul or degrade the properties that are produced by the special quenching and tempering in the steel-making procedure.

Provisions are made in the AWS Bridge Specifications regarding condition of electrodes, dew point of shielding gases, dryness and cleanliness of flux, and its packaging and storage. There are also a number of specific requirements relating to welding procedures and conditions during welding. These provisions are presumably not subject to alteration by means of procedure qualification.

One rather unique provision is made with regard to these 2 welding processes. The welding must be started in such a manner that sufficient heat buildup is permitted for complete fusion of the weld metal to the groove faces of the joint; and welds, stopped at any point in the length of the joint and restarted after a delay of more than one minute, must be examined at that point by NTD methods to determine whether full fusion has been accomplished. The welds must be repaired, if necessary, in compliance with the AWS Bridge Specifications (6, Articles 307 and 308).

Stud Welding

The 1969 edition of the AWS Bridge Specifications contains quite extensive provisions for the installation and inspection of steel studs welded to steel; for connecting members and connection devices to concrete, such as concrete anchors and shear connectors in composite steel-concrete construction; and for fastening members to other members or appurtenances. Mechanical test properties are specified for the steel material of the studs. Tests prescribed for the qualification of stud bases, or stud tip at welding end, are to be carried out by the manufacturer, who must furnish through the contractor a certification of the test data and also a description of the stud and arc shield when requested by the engineer.

Quality control tests to be made in the field are prescribed to demonstrate that the procedure of stud welding is effective and adequate. Requirements are prescribed for visual inspection and testing in bending by striking with a hammer and also for torque testing threaded studs. For critical structural connections, the engineer may designate more tests or tests other than those prescribed.

ALTERATION OF PROCEDURES BY QUALIFICATION TESTS

The concept of prequalified welding procedures in the AWS Bridge Specifications is based on the various clauses of the workmanship, technique, electrode, and welding procedure provisions of the Specifications. Since this concept was introduced in the Specifications, there has been some lack of agreement among the committee members who wrote them and also among those who use them with regard to just which provisions are subject to change by means of the special welding procedure qualifications tests of the Specifications (6, Appendix D). It is agreed that some of the provisions surely cannot be changed by procedure qualifications, but there is not full agreement as to just which provisions fall in this category.

One might be led erroneously to presume that only the provisions for manual shielded metal-arc welding (6, Article 409) and those for submerged arc welding (6, Articles 414 and 415) are subject to change by procedure qualification tests. One might further presume that all of the provisions of these articles are subject to change by procedure qualification tests. It is evident from various statements in the Specifications that such blanket presumptions would be wrong. For example, Articles 223 and 501 make it obvious that the intent of the Committee is that even some of the details for the design of new bridges in Section 2 are subject to change. Surely some of the proportions of grooves that are detailed in Section 2 (6, Figure 216) may be changed to some extent, at least, by procedure qualification tests.

On the other hand, although it is indicated in Article 223 that joint details may depart from the details given in Article 224, paragraphs b through e, when proper qualification tests are made, it is evident that most of the requirements in these paragraphs are related to stress distribution as influenced by arrangement and proportions of fillet welds with reference to the base metal parts that are joined. For example, the minimum size of fillet weld for various thicknesses of base metal parts joined, as specified in Article 224, paragraph b, is not altogether a matter of sensitivity to cracking, which would be influenced by welding procedure. It is also related to stress distribution. Apart from whether a fillet weld can be expected to be sound or not, there is a minimum appropriate size to be used in joining a given thickness of steel material, just as there is a minimum size of rivet that can be expected to function properly in transferring stresses among base metal parts of a given thickness.

Likewise, it is obvious that Article 224, paragraph e, is based on stress distribution that has been shown by tests to result in higher than average stress at the ends of longitudinal fillet welds, i.e., parallel to the direction of stress.

Tests have also demonstrated that, apart from the non-uniform distribution of stress in longitudinal fillet welds, there are geometric stress concentrations at the ends of both transverse and longitudinal fillet welds. Also, experience and tests have shown that in some groups of welds or rivets, such as in the shear connections at ends of beams or stringers, the actual direction, distribution, and concentration of stress is such that a tendency for a progressive failure is produced along the length of the joint once the failure has started. This occurs as tearing or cracking in fillet welds.

For these reasons, the AWS Bridge Specifications have carried, for at least 33 years, requirements for the ends of fillet welds to be "returned" or carried continuously and full size around corners at the ends of such welds. Originally, this requirement pertained properly to the ends of all fillet welds, whether transverse or longitudinal and whether or not they were proportioned to withstand repeated stress.

It is interesting to note also that Article 224, paragraph a, properly requires that fillet welds made by gas metal-arc or flux cored arc welding meet the requirements of Article 224, paragraphs b through e, and also be qualified as provided in Article 502. This would seem to recognize that these requirements should not be subject to change by procedure qualification.

It seems evident also that some of the requirements relating to prequalified procedures for manual shielded metal-arc welding and submerged arc welding (6, Articles 409, 414, and 415) should not be considered to be subject to change by means of qualification tests.

It will undoubtedly be very difficult and require quite a long time for the Committee to resolve matters of this kind. In the meantime, it is incumbent on the engineer to determine whether any particular provision or requirement that is proposed for alteration can or cannot be changed by procedure qualification tests. Article 502 provides that the qualification of welding procedures shall be done to the satisfaction of the engineer. The following discussion may be helpful in determining what changes might be permitted by procedure qualification.

If it is proposed to use somewhat larger sizes of electrodes than those permitted by the AWS Bridge Specifications, the engineer might permit such a change, subject to procedure qualification tests to verify that sound and adequate welds can be made with the larger electrodes, at least for some particular application. In addition, the engineer might appropriately require some kind of demonstration that the welders, who are to use this procedure, can make good welds with the proposed larger electrodes.

Because details of groove design or preparation of edges for groove welds are considered as part of a complete welding procedure, changes in these details may be permitted by the engineer if verified by welding procedure qualification tests. This is implied in most specifications. Without special qualification, the details could be varied only within the limits indicated in the specifications.

Experience has shown that, when the included angles, root faces, and root openings fall within the limits shown on the standardized details and described in the specifications, sound welds can be made with adequate penetration and fusion when other requirements of the specifications are followed. If it is proposed to alter the dimensions of the grooves beyond the prescribed limits, the contractor is required to prove that his proposed revised procedure will result in sound welds.

Limitation on Weld Metal Deposition

The maximum size of fillet welds to be made in one pass and the maximum thickness of layers for both fillet and groove welds are established by the AWS Bridge Specifications as part of the standardized welding procedure to provide good weld quality and to prevent the making of comparatively deep and narrow weld deposits that might have a tendency to develop ingot-type cracks during cooling. These provisions are tempered somewhat by the necessity for permitting greater thicknesses for root passes to ensure proper penetration, to prevent cracking, and to avoid difficulty in manipulating the electrode.

Any proposed departure from these provisions would have to be established by procedure qualification. One of the considerations involved in prescribing maximum thicknesses of layers is the general quality of the weld metal and its susceptibility to being refined by the heat from subsequent passes, apart from the consideration of avoiding layers having such thicknesses that they might tend to include slag or entrap gas. Therefore, before having any proposed changes of this kind qualified by procedure qualification tests, the inspector should check with the engineer to make sure that the changes when qualified will be acceptable from general considerations.

It is recommended that the width of any weld bead deposited in the flat or overhead position not exceed a width equal to $3\frac{1}{2}$ core-wire diameters. Because of the nature of the manipulation in vertical position welding, there is no need to establish a limit to the width of weaving for this position.

Inalterable Provisions of the AWS Bridge Specifications

Because of their very nature, some provisions of the AWS Bridge Specifications that might be considered part of welding procedures should not be altered. For example, in the welding processes, the cleaning of previously deposited layers and any necessary cleaning of base metal adjacent to weld joints should always be done to remove any material that might adversely affect the quality of the welding. Experience has

shown that in most cases the slag not removed from a previously deposited layer before the next successive bead is applied may be trapped in the weld. Likewise, experience has demonstrated the advisability of gouging the root of a weld from the second side of the groove to ensure full fusion into sound weld metal of the first side that was welded.

If metallurgical considerations are involved in prescribing specification requirements for welding procedures, there may be cases where such provisions should not be altered even though procedure qualification tests indicate that sound welds without obvious defects can be made by a proposed revised procedure.

Design Considerations for Welded Joints

Under no circumstances should butt joints be used that are not fully welded throughout their full cross section because high concentrations of stress occur at interior voids. Even though a butt joint, for example, is not stressed sufficiently to utilize the full allowable strength of a complete penetration weld, such stress concentrations may be high enough to make the behavior of an incomplete penetration joint unpredictable.

For the same reason, groove welds made by welding entirely from one side are not usually permitted in bridge construction unless the welding is completely fused to an approved backing material or is used in nonstress carrying members. Even in the latter case, the preparation of the joint and the welding technique must be such that substantially complete penetration is provided. Joints welded from both sides have the advantage that angular distortion is more easily controlled.

Although incomplete penetration groove welds have been used at corner joints of box sections of compression chords of bridges, it is doubtful that such welds can be used safely in tension members, even if the stress is comparatively low. Fractures in structures have been attributed to cracks in such longitudinal, incomplete penetration groove welds.

Intermittent groove welds should not be permitted for bridge construction because of the stress concentrations that occur at the ends of their increments and because experience shows that it is difficult to make intermittent groove welds without serious defects. Intermittent fillet welds are permitted only for connecting stiffeners to the webs of beams of girders; they are seldom used in bridge construction.

Edge or corner joints made with bead welds should be prohibited. Even though such a joint may not carry any calculated stress, it may actually be located in such a position as to participate in stress, either longitudinally or transversely. Thin weld sections of this kind are likely to crack, and the direction of propagation of a crack is difficult to predict.

Table 8 gives the minimum size of fillet weld to be used on any thickness of material as provided in the AWS Bridge Specifications for a joint involving only fillet welds, rather than a combination of fillet and groove welds. An exception to this provision is that the fillet weld size need not exceed the thickness of the thinner part joined unless a larger size is required by calculated stress. It is important to realize that, when the minimum size of fillet weld for a given thickness of material is so large that it must be deposited in more than one pass, a cascade type of build-up sequence may have to be used in depositing the weld to prevent the root pass from cracking before subsequent passes are deposited.

The restriction on the maximum size of fillet weld that may be used along the edge of material thicker than 1/4 in. is based mainly on the difficulty, from a practical viewpoint, of depositing along such an edge a fillet weld that will actually have an effective size equal to the thickness of the material. When a fillet weld equal in size to the thickness of the ma-

TABLE 8

MINIMUM ALLOWABLE FILLET WELD SIZE FOR VARIOUS BASE METAL THICKNESSES

Material Thickness, in	Minimum Size of Fillet Weld, in	Material Thickness, in	Minimum Size of Fillet Weld, in
1/2 and under	3/16	Over 1 1/2 to 2 1/4	3/8
Over 1/2 to 3/4	1/4	Over 2 1/4 to 6	1/2
Over 3/4 to 1 1/2	5/16	Over 6	5/8

terial is used along such an edge of material thicker than ¼ in., a special technique is required by the AWS Bridge Specifications to ensure that the effective size of the fillet weld is equal to the thickness of the material.

The AWS Bridge Specifications contain special provisions under which butt welds in parts of equal thickness may be computed for the allowable unit stresses permitted, even under severe fatigue loading. Although comparatively minor surface irregularities and internal defects, such as entrapped slag and gas pockets, are known to reduce fatigue resistance somewhat, their effect on strength under substantially static loading is of little, if any, consequence. When finished smooth and flush with the base material on all surfaces and when established as sound by radiographic or ultrasonic inspection, butt welds, even when subjected to fatigue, are accorded the same allowable unit stresses as those for the base metal at the joint. The excess weld metal or convexity at the surface of the joint may not be removed by chipping unless the chipping is followed by grinding in the direction of applied stress so that a smooth surface is produced free from depressions and substantially flush with the base metal. Parts of unequal thickness must be transmitted as provided in the Specifications (6, Article 221, paragraph c).

Another commonly specified requirement, which has resulted from design considerations and distribution of stress, is the provision that the minimum effective length of a fillet weld shall be 4 times its size but in no case less than 1½ in. Likewise, there is a provision for making a gradual transition between 2 parts of a butt joint of unequal width or thickness usually required to be at a slope of not less than 1 in 2½, and a requirement that extension or run-off bars be used for the start and completion of butt welds, which are free at each end, but that such run-off bars be removed subsequently and the edges ground smooth. These provisions are made in consideration of the fact that the resistance of a member is reduced more severely in a dynamically loaded structure than in a statically loaded structure by abrupt changes in section and defects at the surface and edges of such members. Provisions of this kind should not be altered under any circumstances. Welding procedure qualification tests do not demonstrate the effects of notch-like details on impact strength or fatigue resistance.

5
Methods and Devices for Fitting, Shop Assembly, and Field Erection

Fabricators and builders of various kinds of welded structures and large assemblies have become experienced in the use of welding and have developed methods whereby the fitting and holding of parts in proper position and alignment do not require the punching and drilling of holes in main material for assembly or erection bolts. The use of devices that eliminate holes, which are not desirable for structural reasons, may not increase the cost of the work and may even reduce costs and time of fabrication and erection. Sometimes holes for erection bolt shown on shop drawings were used; but as fitters gained experience, they developed easier and quicker methods that did not require the use of holes even when provided.

The variety of special fitting devices that have been developed and used for welded structures has been limited only by the ingenuity and imagination of the fitters doing this work. Many of these devices have been found to be suitable for various conditions and have come into more or less standardized use. Others have been developed for some particular operation and find little use otherwise. Quite often a workman or a foreman takes a good deal of pride in developing some device of this kind and takes a special interest in making it work efficiently, whereas another workman may not think very highly of it, possibly because he did not develop it himself.

For this reason and because the contractor is responsible for the results obtained by using these devices to provide and maintain proper fitting, position, and alignment and to safely support the work, the developments of suitable and efficient jigs, fixtures, and fitting devices is properly a function of the contractor. The inspector should not attempt to dictate use of any particular device or impose arbitrary requirements for its use.

Nevertheless, the inspector should have the privilege of reviewing the methods proposed by the contractor to make sure that they will not prevent adequate fulfillment of the requirements of the approved welding procedures and sequences and the requirements pertaining to quality of the workmanship. The inspector should be knowledgeable as to the location and direction of the tack welds that accompany these fitting aids. Temporary tack welds should not be placed in areas of high stress or transverse to the direction of the flow of stress in the member. This applies even if the tacks are removed and ground flush. If the proposed methods will not accomplish this, the inspector will be in a position to offer practical constructive suggestions for accomplishing the intent of the specifications if he is familiar with what the objectives are in using such devices and how some of them function to attain these objectives.

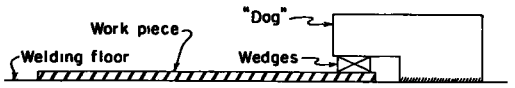

Figure 2 Dog and wedge device

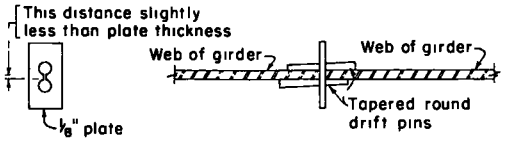

Figure 3 Slotted spacers and wedges

The devices must be adequate to bring parts into proper position and alignment and to hold them securely. In addition, they must not impose so much restraint against weld shrinkage that weld cracking might result. On the other hand, they may be required to provide a considerable amount of restraint in order to hold parts in proper position and prevent distortion. For example, a dog and wedge device (Fig. 2)

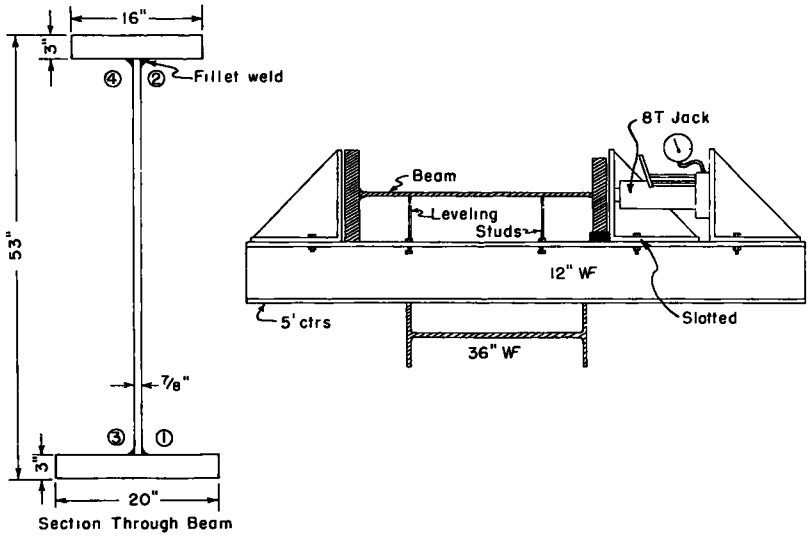

Figure 4. Frame used in welding girder (tilted 35 deg from horizontal during welding)

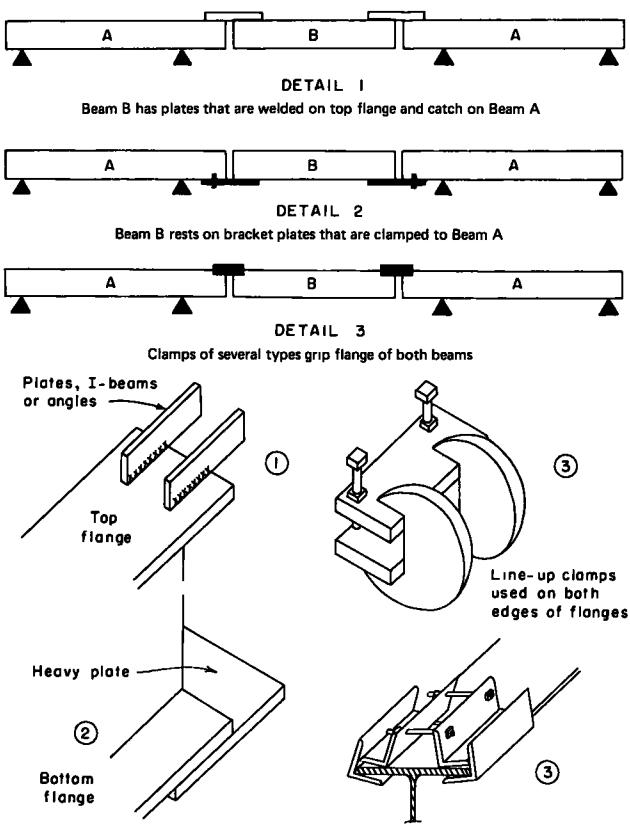

Figure 5 Details of methods used by contractors to support beams during erection

can be made to exert a great deal of force normal to the surface of the plating that is to be dogged down to a welding floor or to some other support without exerting excessive restraint against a slight amount of movement in the direction parallel to the surface of the plating.

To be efficient, such devices should be quick-acting. Devices using bolts, clamp screws, turnbuckles, and other threaded parts are useful and may provide the best solution in some cases, but turning up a nut or screw takes more time than driving a wedge or tapered pin or operating some device with a toggle action. In the shop, and perhaps in the field also, air or hydraulic jacks or pistons can be used to bring parts rapidly into correct position.

The inspector should provide assistance, encouragement, and cooperation to an appropriate extent in the development of efficient jigs, fixtures, and positioning and fitting devices in the shop and in the field. Any method that will bring parts together rapidly into proper position and hold them that way without inter-

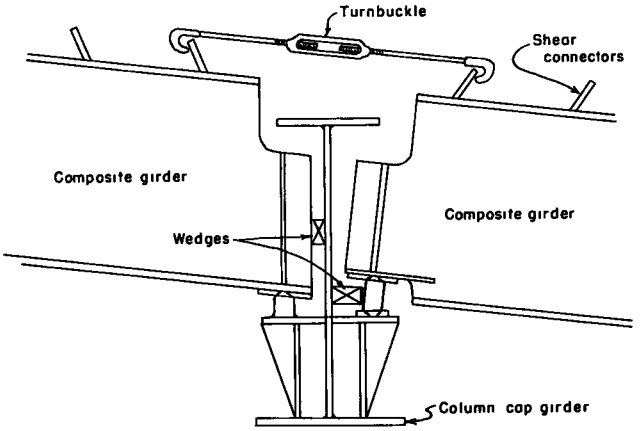

Figure 6 Longitudinal adjustment of girders.

fering with the welding operations or that will quickly rotate parts in some kind of a shop positioner to provide the most efficient position for welding will tend to make fitting and proper welding easier and, therefore, to facilitate good workmanship.

Methods that require readjusting devices are not as preferable as those that prefabricate with sufficient accuracy and provide positive stops or rigid points of contact in a jig against which the parts of the weldment can be brought to bear to get them into correct position and alignment. However, this may not be possible in erection and in the shop assembly of large weldments. Sometimes extra stock of material may have to be provided on some edges adjacent to the last joint to be welded so that, after shrinkage from prior welding has occurred, the edges can be trimmed for proper fitting. Also, adjustment for an accumulation of minor errors in fabrication sometimes may have to be made in a similar manner. Rolling mill tolerances in shapes may result in minor misalignment for which compensation must be made with the use of adjustable devices.

When the fitting devices can be made comparatively few in number and simple in operation, they are less likely to interfere with welding operations or to restrict

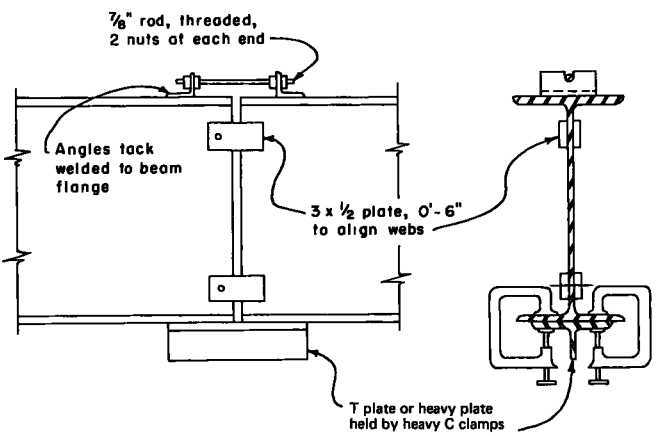

Figure 7 Erection support for floating end of beam.

clearances for welding. Sometimes a device may be made to serve more than one purpose. For example, the slotted spacers and wedges or tapered pins shown in Figure 3 are used to align 2 plate edges at a butt joint, such as one in the web of a girder, and at the same time they provide the proper spacing at the root of the groove while the parts are tack-welded together thus ensuring correct root spacing after tack welding. However, these spacers must be driven out before the welding in the root of the groove is carried too close to them or they will be held so tightly by the weld shrinkage forces that they will have to be remvoed by oxygen cutting or chipping. This kind of removal must be done carefully to prevent the root and the walls of the groove from receiving damage that would encourage the occurrence of weld defects.

Figures 4, 5, 6, and 7 show a number of devices that have been used by contractors for welded bridge construction to facilitate proper fitting, assembly, and erection. The details shown in Figure 5 illustrate some of the methods that various contractors use to support the beams during erection of steel. These supports must permit adjustment vertically so that beams of different depths may be assembled with a common centerline.

6

Welding Sequences

The main objective of a welding sequence is to control distortion and to eliminate weld cracking by preventing excessive restraint against weld shrinkage. The broad category known as welding sequence can be divided into 2 subclassifications. One is the build-up sequence or order of deposition in which various beads or layers of weld metal are deposited in a welded joint; it includes welding methods such as backstep, skip, cascade, and block, The other is the sequence in which various welded joints in an assembly are to be made to balance the deposition of weld metal or to control the effects of weld shrinkage in other ways.

Use of a proper build-up sequence will help to control distortion by distributing heat properly along a welded joint and by controlling the degree of concentration of heat. It will also influence the amount of restraint against weld shrinkage. The sequence in which various joints are welded will also influence the amount of restraint against shrinkage. Thus, the amount of expansion and contraction of weld metal and base metal may be controlled to some extent.

Complete elimination of restraint against shrinkage is impossible. In many cases moderate restraint is used intentionally to control distortion and to maintain parts in correct shape and alignment. Often such moderate restraint is provided by using a welding sequence that will keep the weld shrinkage forces balanced, for example, by following a symmetrical system of depositing weld metal in a symmetrical assembly. Use of a symmetrical sequence of deposition applies not only to a single joint but also to the sequence of depositing various joints in built-up sections and in a structure or welded assembly as a whole.

Often the control of distortion may possibly be facilitated in design by balancing the amount of welding symmetrically about the neutral axis of a built-up member. If this is impossible, distortion sometimes may still be controlled quite well by adopting an asymmetrical order of deposition that will compensate.

Residual stresses will be set up in steel material by any manufacturing or fabricating process, including the rolling of shapes and plates in a steel mill. This rolling involves the heating of steel and its subsequent cooling under any conditions except those that permit very slow cooling under controlled conditions. Therefore, it is impossible to weld a structure without creating residual stresses. The effects of various operations, such as heating and cooling, and the effects of using various sequences of welding exert complex influences on residual stresses. However, they can be near yield point intensity in one direction. Because these effects are complex and are virtually impossible to control so that their influence on residual stresses can be predicted, any attempt to exercise such control is likely to produce unforeseen results. The effect of temporary shrinkage forces can usually be controlled in such a manner that distortion is minimized and weld cracking prevented. The objectives should be kept in mind. A subsequent discussion of control of distortion and correction of distortion presents some of the fundamental characteristics of expansion and contraction during welding or localized heating. These fundamental characteristics should be kept in mind during the planning of a welding sequence.

Fillet and groove welding on bridge girders in the shop is now most commonly done by automatic or semiautomatic welding using either submerged arc or gas metal-arc CO_2 or a combination of these processes. However, the use of other processes is also possible.

The use of automatic or semiautomatic welding has been facilitated by an increase in the use of material positioning devices. Other installations utilize manipulators or side-beam or track-mounted carriages to position the welding equipment. Both single-

and multiple-electrode equipment is used. Multiple-electrode welding equipment permits faster welding speeds. However, efficient material handling must be associated with fast welding speeds for maximum economy, and the set-up and handling time for multiple-electode welding is often much greater than actual welding time. Therefore, fast welding speeds are only part of a program to obtain high production rates and low costs.

The welding sequences that minimize their operating expenses are selected by most of the fabricators, who undertake welded bridge construction for fabricating welded girders. They then rely on the inspector and the engineer to tell them how to prevent distortion and excessive camber loss. The factors involved in preventing these difficulties are discussed in the following paragraphs.

Welded bridge erection is geared toward handling the largest possible lengths in the field. Shop assembly rather than field assembly is the most economical approach. Consequently, welding in the field is held to a minimum. Various types of fit-up clamps and clips are often used instead of erection bolts at the field splices to help in the fitting of the girders before welding.

Field splices as well as shop splices of built-up plate girders are best made in one plane. Proper welding sequence is of fundamental importance when making a girder splice. In one sequence, after the fit-up has been made, the web should be partially welded. The flanges are then welded, followed by the completion of the web weld. This procedure minimizes distortion and buckling of the web. Other sequences have been used successfully when proper welding procedures are followed. Coped holes are sometimes used at the ends of the web splices to facilitate welding of the flange splices. It is important that cope holes be cut to a smooth radius.

Field welding of items such as diaphragms, floor beams, and stringers must proceed as closely as possible behind the fitting so that shrinkage stresses do not accumulate. Here, as before, a planned welding sequence is important to minimize distortion and excessive amounts of residual tensile stresses.

BUILD-UP SEQUENCE

Various build-up sequences or orders of depositing weld beads and weld layers in a joint may be used to control distortion and prevent cracking.

A backstep sequence (Fig. 8) produces throughout the length of a long welded joint a distribution of heat that will prevent an accumulation of shrinkage effects as the welding progresses. Backstepping will often prevent warping or buckling that is likely to occur in relatively thin plating when welding is continuous in one direction. Backstepping will also overcome the tendency of a welded joint made transversely across a member to create a small deflection in the member if welding is carried continuously in one direction. A good example is the backstepping of a vertical butt weld in the field splice of a welded beam, as shown in Figure 8, where the first increment is deposited in the uppermost segment of the joint while the welding is actually in an upward direction, and each increment is deposited along the length of the butt weld in a general downward direction while the welding is in an upward direction. This prevents creating a sagging deflection in the girder at the location of the web splice.

A cascade build-up sequence is shown in Figure 9. The purpose of this sequence is to get a successive bead of weld metal deposited over a previously deposited bead,

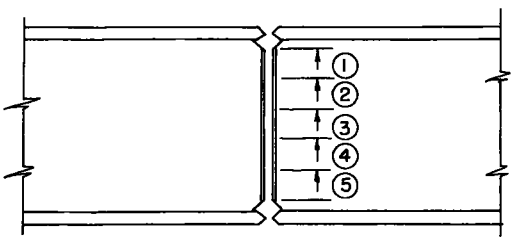

Figure 8. Backstep welding sequence

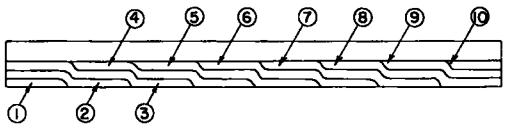

Figure 9 Cascade welding sequence.

such as a root pass, before the previous pass has cooled very much. Butt welds or fillet welds made in relatively thick material, especially in base metal comparatively cold, may cause a root pass to crack if a cascade sequence is not used. Under conditions of very severe restraint and rapid cooling caused by cold temperature of the base metal, it may be necessary to continue the use of a cascade build-up sequence until the weld has been completed to full size.

Most welding specifications include provisions for a minimum size of weld that can be used on any given thickness of material. This is required partly from the same considerations that prescribe the minimum size of rivet or bolt that can be used in a given thickness of material; i.e., a smaller size would not provide suitable stress distribution and would be impractical. However, there is another important reason for specifying minimum sizes of welds for given thicknesses of material. This is to prevent the depositing of such a small bead of weld metal that it would cool too fast and its cross-sectional area would not be sufficient to resist shrinkage forces during cooling. When the minimum size of fillet weld specified for a given thickness of material is governed entirely by this latter consideration, the same minimum size specified should apply equally well to the minimum size of root pass in a fillet weld unless a cascade build-up sequence is employed. With the exception of some vertical welds, for which a larger size of fillet weld is permitted to be made in one pass, use of the cascade sequence will often be the correct sequence for making multiple pass welds on thick material. Extra care must be exercised in cleaning to provide slag-free welds in both cascade and block welding.

A skip-welding or wandering sequence is one in which an increment of welding is deposited and then one or more segments of the length of the joint are skipped for the time being. Then another increment of welding is deposited and one or more segments of spaces skipped, and so on. Later, after the first increment has cooled at least somewhat, another series of weld increments is deposited either adjacent to the increments first deposited or, if several spaces have been skipped, midway between the increments of the first series. This routine is continued until the entire length of the joint has been welded. The objective of this sequence is to keep the heat of welding distributed more uniformly along the length of the joint rather than to allow it to become more concentrated as it would if the welding were done continuously and progressively along the length of the joint. This sequence is usually employed for the purpose of controlling distortion that would otherwise be sufficient to be objectionable. When this sequence is used for making a multiple-pass weld, the succeeding layers or beads following the root pass are usually deposited in the same manner in each layer of the weld, but the ends of the segments or increments are staggered in successive layers or passes.

Another build-up sequence that has been used sometimes, very much for the same purpose as the cascade sequence, is the block-welding sequence (Fig. 10). Each section of segment of the complete weld of full throat thickness is built up in blocks spaced uniformly along the length of the joint, leaving intermediate spaces in which other blocks are deposited subsequently, following somewhat the same order as previously described for a skip-welding or wandering sequence. Stepped ends must be provided on the blocks of welding, as shown in Figure 10, to prevent all of the points of stopping and restarting of welding from occurring one above the other, which might result in an accumulation of defects all at one point in a weld. The ends of the blocks must be cleaned very carefully, and any defective end craters or starting portions of the layers of the block must be removed.

The build-up sequence has been used principally for welding armor plate or other high-alloy steels to prevent the cracking of root passes and to control the amount and distribution of heat that may be quite important for some steels. There appears to be no reason for using this sequence in structural work for the welding of ordinary structural grades of carbon steel or low-alloy

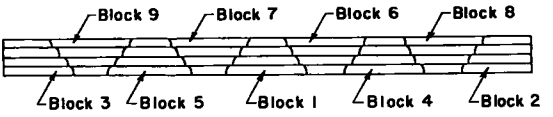

Figure 10 Block welding sequence.

steel. If some expedient of this kind is necessary for this work, the cascade sequence usually will be at least equally as effective and easier to control properly. The important requirement is to get subsequent weld passes deposited over previous passes while they are still hot and before they have an opportunity to crack. Uniform preheating over quite a wide area in the general vicinity of a joint may help to prevent cracking. Local preheating should not be used without a careful analysis of its effect. Under conditions of very severe restraint, such as the welding of a comparatively small insert plate into a panel of plating, the use of localized preheat can produce an adverse effect when the shrinkage of the preheated part is added to the shrinkage at the welded joint.

Another expedient that may be used under relatively severe conditions to prevent cracking and also may be very helpful in eliminating lateral deflections or warping is to weld from the middle of a joint toward the ends of the joint where there is less restraint, for example, at the free edges of plating. It is preferable to carry along the welding in an outward direction from the middle of the joint simultaneously in both directions. This may be accomplished by employing two welders who weld in opposite directions, or one welder who alternates his welding first in one direction and then in the other direction to maintain symmetry of deposition.

Likewise, when a comparatively thick groove weld is made in a butt joint (butt weld), the welding from one side of the plating must not be carried too far ahead of the welding from the other side of the plating, unless the plate edges are clamped or weighted down or otherwise restrained from developing angular distortion about the neutral longitudinal axis of the butt weld. When single-V butt welds, with or without a backing strip, are made, some kind of restraint such as that mentioned usually must be provided to prevent angular distortion.

In connection with the balancing of the deposition of weld metal about a neutral axis of a weld or member, it should be kept in mind that deposition of an equal amount on the second side will not necessarily produce a sufficient counteracting influence in most cases to correct any deformation, such as angular distortion, that has been produced by the welding from the first side. Therefore, somewhat more welding must usually be deposited from the second side than was previously deposited from the first side before the return and continuation on the first side. After these first two steps have been carried out from opposite sides of the joint, enough resistance to distortion has usually been provided that conditions are not as critical from there on. However, the best advantage is usually achieved in each successive further step if the deposition of weld metal is carried on each side far enough to build a somewhat greater total amount on that side than the total deposited, up to that point, on the opposite side of the joint. Applying this principle to the making of a double-V butt weld, one would deposit a lesser number of passes of welding when the first welding is done in the root from the first side than when the second welding is done from the opposite side of the joint.

SEQUENCE OF WELDING JOINTS IN AN ASSEMBLY

Balancing of the deposition of weld metal to prevent distortion is applied in planning a sequence of welding various joints in an assembly and also in the build-up sequence for a welded joint. Some assemblies will be almost perfectly symmetrical after they have been completed, but the neutral axis of the parts actually being welded at one point in the sequence of welding may have a different neutral axis at that particular time unless the parts are all held together in some way (for example, by very heavy and extensive tack welding) to make them act virtually as an integral assembly during all of the welding. Tack welding of a complete assembly in advance may be advisable for a comparatively small weldment, but it may result in distortion or even weld cracking in larger subassemblies. In a large assembly, such as the complete deck system of girders, floor beams, and stringers of a complete span or large section of a span, complete tacking together of parts quite a distance in advance of the production welding can result in an accumulation of shrinkage that will finally produce quite large and objectionable distortions, such as lateral bowing of floor beams. One must apply the idea of balancing the deposition of weld metal, therefore, with due caution and regard for the extent of the joining together of various parts at the time any part of the welding is being done.

At one time, engineers in charge of welded construction sometimes prescribed the use of elaborate roller supports or other devices to almost entirely eliminate restraint against weld shrinkage at important joints, such as field splices in large welded girders. These expedients were likely prompted by a false belief that even a moderate amount of restraint would create objectionably high residual stresses. In addition, welding processes and procedures were not very well developed at that time.

Experience has proved that such elaborate provisions are not necessary to prevent weld cracking. Severe restraint can create sizable residual stresses of the "reaction" type, as opposed to locally balanced residual stresses. However, such severe degrees of restraint are seldom, if ever, encountered in practical construction. Such reaction-type residual stresses can be produced in a laboratory, for example, by making a butt weld between two very short lengths of plating with the outer ends securely anchored to a heavy rigid base. In this case, transverse residual stress across the butt weld might approach yield point intensity. If the plates were several feet in width, in the direction of the joint, longitudinal residual stresses in the butt weld might also be about yield point intensity. In certain of these cases, residual stresses might cause premature deformations that would contribute to instability.

For these reasons, the practical objectives in planning a welding sequence are to control distortion and to prevent the cracking of a weld during cooling while it is subjected to shrinkage under comparatively severe restraint. An improper welding sequence might require the use of special procedures, at considerable extra cost, to prevent weld cracking.

Usually the principal objective of a welding sequence will be to control distortion. In a large part of the welding for bridge construction, proper support and clamping to hold parts in correct shape and alignment will prevent distortion without the need for working out a special welding sequence. The more complex conditions of larger welded assemblies, such as the deck system of a bridge, require that a suitable welding sequence be determined in advance. The various joints and connections should be welded in a sequence that will permit relatively free shrinkage for each joint or connection in an assembly of this kind if that shrinkage would be additive to subsequent shrinkage of other parts and result in an objectionable accumulation of loss of dimension or, perhaps finally, would exert enough force on some other member to distort it seriously.

The effect of the sequence of welding in a large section of the deck system of a bridge is illustrated in more detail in an example of a deck system composed of 2 main girders or trusses with floor beams and with stringers fitted between and directly connected to the floor beams by rigid welded connections rather than by flexible-type connections such as a pair of framing angles.

If the floor beams were welded to the main girders or trusses in advance of the welding of the stringers to the floor beams, the welding of stringer connections in the first panel would result in shrinkage forces that tend to bow the floor beam laterally toward this panel. The welding of this first group of stringer connections would not likely produce enough bowing in the floor beam to be noticeable or objectionable. With all of the floor beams welded in place in advance, however, the shrinkage would accumulate during the welding of each of the successive panels of stringers to the floor beam. Finally the shrinkage would accumulate to such an extent that it would produce a very pronounced bowing in the end floor beam of a long section of deck.

On the other hand, if the lengths of the stringers were detailed correctly to allow a small amount for weld shrinkage at their connections to the floor beams, and if the welding of each floor beam to the main girders or trusses were delayed until connections have been welded to it from the stringers in the panel behind it, there would be neither an appreciable bowing of any of the floor beams nor any accumulation of loss of dimension that would prevent the floor beams from being fitted at the proper locations for their connections to the main girders. Also, because a slight amount of restraint may exist because of the friction of clamps or other devices that hold parts temporarily in position during erection, the welding should preferably be started in the middle of a large section of bridge deck of this kind and allowed to progress simultaneously or alternately in each direction toward the ends of the section or span being welded.

When stringers are supported on the top flanges of floor beams, the shrinkage from the fillet welds that attach the stringers to the floor beams usually is not enough to produce any substantial effect on the lengths of the stringers or floor beams. If the stringers are made continuous, however, all stringer splices in any panel should be made before the section of stringers being added is welded to the floor beams ahead in order that the shrinkage from the splice welding will not exert a pull on the floor beams. The making of any field splices in the main girders should obviously be done in advance, at least before the welding of the deck system progresses to the location of the splice.

To hold the amount of shrinkage at any direct welded splice or connection to a minimum requires that the parts be fitted accurately at these connections or splices. A root spacing at any point greater than that called for by the approved welding procedure will have a tendency to increase the amount of shrinkage and loss of dimension across such a joint. If errors in fabrication have resulted in excessive widths of some of the grooves for butt welds, one of the abutting beveled edges may have to be build up with weld metal to reduce the root spacing before welding is started on the joint.

One of the best examples of applying a sequence of welding in bridge construction to avoid both distortion and weld cracking is to make a splice in a rolled beam or built-up girder or in the elements of a built-in girder. Shop splices of girders are usually made by welding the splices in the flange plates and in the web plate before they are assembled to make up the girder and while the plates on either side of the butt weld are free to move independently. Making shop or field splices in rolled beams and field splices in built-up girders requires a more carefully planned sequence of welding. Likewise, very long sections of welded girders assembled in the shop in order to reduce the number of field splices may require that one or two shop splices be made between prefabricated girder sections.

In making a splice in a rolled section or a field splice in a built-up girder, the first step is to tack weld the abutting sections together securely after they have been aligned and spaced properly. An arrangement of tack welds that is used frequently is shown in Figure 11. The tack welds should be made substantial enough to prevent their cracking, but not so extensive that the restraint offered by them will cause a tendency toward distortion or weld cracking. They should be made in such a way that they will conform to all requirements of the specifications so that they can be incorporated subsequently into the final welding. However, if any tack welds are not made properly and have cracks or other defects, they should be removed and replaced before the final welding progresses to them.

The AWS Bridge Specifications provide that for long built-up girders a limited number of shop splices may be made between partial-length subsections in which the web and flanges have been assembled and welded together in advance. Sometimes it is desirable that the complete girder be turned over between the various steps of the welding of such a shop splice in order that all of the welding may be done in the flat position. In these cases, the abutting sections at the splice must be held together and in alignment with sufficiently substantial tack welds to prevent cracking of part of the permanent splice welding while the girder is being turned over.

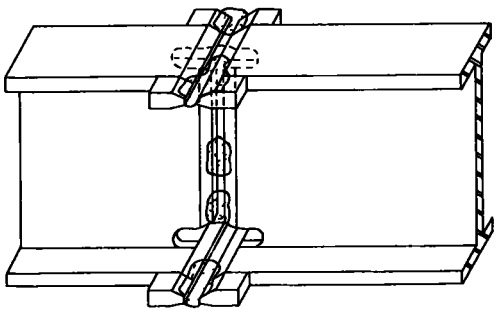

Figure 11. Typical arrangement of tack welds in splicing a girder

Experience indicates that the sequence in which the splice welds of the elements of a beam are made can be very critical with respect to avoiding shrinkage cracks under conditions usually prevailing in construction work.

An excessive loss of time caused by extra handling or caused by having welders move from one point of welding to another

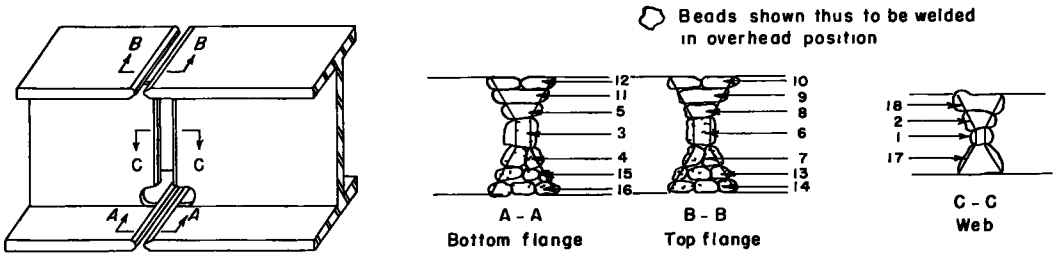

Figure 12. Sequence for welding field splice in heavy beam. Root of initial weld is gouged or chipped to sound metal before second side is welded

point occurs frequently in the making of splices in rolled steel beams or comparatively small plate girders. Often an expedient to prevent this is to complete the welding of the web splice before starting to weld the flange splices. The AWS Bridge Specifications provide that web splices shall be welded before flange splices unless otherwise approved by the engineer. Splices in such members have been welded successfully using other sequences. This provision of the Specifications has been construed as indicating that weld cracking is prevented best by at least starting the web splice first (Fig. 12). This conforms to the general principle of starting the welding in the middle of a joint or splice and progressing outward toward free edges or surfaces. If the flange splices were welded first, they would provide a good deal of restraint both above and below the joint in the web during its welding. Restraint is avoided by expanding flanges with sufficient heat over sufficient length to equal the expected shrinkage in the web weld.

Experience has shown that when conditions are critical, as during cold weather, or when comparatively great thicknesses of material are involved, weld cracking may result under such conditions of restraint. In this connection, experience with the propagation of cracks indicates that a crack in the web of a girder is likely to be just as serious as one in the flange.

If the web splice is completely welded in advance of the flange splices in the splicing of a comparatively large girder, experience has shown that the shrinkage forces from the flange welds can cause unsightly buckling in the web, which may exceed the tolerances for flatness prescribed by the AWS Bridge Specifications. Therefore, the sequence of making the splice must be modified so that a part of the web splice welding is delayed until a large part of the flange splice welding has been completed.

At one time designers of welded girders involving splices were quite strongly inclined to follow precedents of riveted construction and require the splices in the web and the two flanges to be staggered. Patterns of fracturing from tests of welded girders to destruction show that there is no tendency for a fracture to follow welded joints. Therefore, the usual practice now is to make the field splices in the elements of a built-up welded girder all in the same vertical plane. The work is thus facilitated and, therefore, a somewhat higher quality of workmanship is likely provided. If, however, the design plans and the approved working drawings show such splices to be staggered and if they must be made that way, a length of the welded joint between the web and flanges of each girder must be omitted, temporarily, between the location of each flange splice and the location of the web splice. These unfinished portions of the flange-to-web joints should then be completed as the last operation of making the welded splice. Otherwise, the web splice would obviously be under restraint from the flanges while it is being welded and, in the case of a deep girder with a thin web, the web might be buckled somewhat as a result of the shrinkage of the welding in the flange splices.

There has been considerable controversy as to whether coped holes should be provided at the ends of web splices, immediately adjacent to flange splices, as shown in Figure 11. These holes have been used for two reasons. First, they facilitate the making of sound welds in the flange splices because without them there is no good access

for depositing sound metal from the side of the flange plate adjacent to the web. Second, unless special care is exercised in making the web splice welds without the coped holes, end defects are likely to remain at the ends of welds where the web joins the flange. When the copes are provided, they are first made somewhat smaller than their final size. When the butt weld of the web splice has been completed, then the coped holes are enlarged to their final size and, in doing this, the defective end portions of the web splice are removed.

An alternative method of preparing ends of beams and making butt welded splices was developed in connection with low-temperature drop-hammer impact tests at Columbia University for the Structural Steel Committee of the Welding Research Council. This method permits sound welded splices to be made without the provision of the holes in the webs, as shown in Figure 13. The preparation for welding, shown at the top of the figure, is as follows:

1. Bevel ends of beam sections. A single-V butt weld is used for flange and/or web thicknes of $\frac{7}{8}$ in. or less. The groove should be on inner side of flanges when single-V is used. A double-V preparation is used for flange and/or web thickness greater than $\frac{7}{8}$ in., and the double-V is made unsymmetrical if necessary to provide a depth of not less than $\frac{3}{4}$ in. for the V-groove facing the inside of the flange.
2. Accurately align beam sections and tack together leaving $\frac{1}{8}$-in. root opening.
3. Install run-off tabs at the 4 ends of the flange butts.

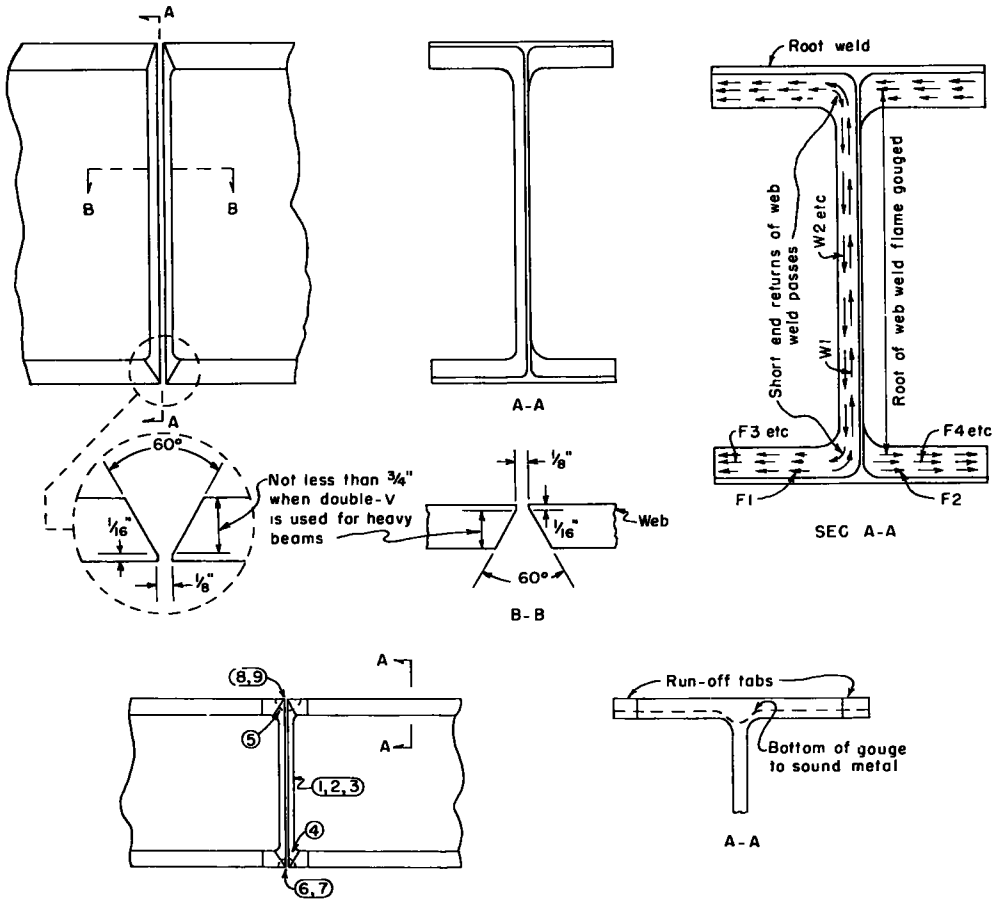

Figure 13 Edge preparation and sequence for shop welding by butt welds for splicing rolled beams without coped holes.

The welding sequence for shop splices, shown at the bottom of the picture, is as follows:

1. Position beam with web horizontal and V-groove upward, and weld beveled side of web, or the side with deeper groove when double-V is used.
2. Turn beam over; gouge back side of web weld to sound metal.
3. Weld back side of web.
4. Turn beam with web vertical and weld inside of lower flange.
5. Turn beam with other flange down and weld inside of second flange.
6. Gouge outside of first flange to sound metal. The gouges are made from the outside (Section A-A) and should be very deep to remove defects.
7. Weld outside of first flange.
8. Turn beam over and gouge outside of second flange to sound metal. Gouges are made from the outside (Section A-A) and should be very deep to remove defects.
9. Weld outside of first flange.
10. Remove run-off tabs and grind edges of flange butts smooth.

Even with this arrangement, the final welding on the outside surfaces of the flanges has to be preceded by deep oxygen gouging, deeper than to the mid-thickness of the flanges, in the portions of the flanges directly opposite the web to remove slag and porosity.

A modification of this procedure, shown in Figure 14, has been used in some state highway bridge construction work. One should be aware, however, that low temperatures, high strain rates, and notches are used to induce a metal to a brittle fracture so that its static strength in the presence of a notch at ambient temperature can be evaluated. In the presence of a crack caused by fatigue, restraint, stress, corrosion, strain aging, or hydrogen embrittlement, the static strength of carbon steels is governed by temperature and diminishes sharply at low temperatures. In the absence of a crack or defect, the static strength of carbon steels is governed by section area and increases gradually as the temperature is lowered. Hence, using low temperature impact tests of whole sections to compare the engineering properties of ideal beam splices with and without cope holes is difficult to justify technically in view of the quality of splices available in normal practice. In most beam failures, fractures were initiated by fatigue cracks that originated and grew from defects at the juncture of the web and flange or in the flange under the web. Welding splices without copes increases the possibility of incurring such defects by at least one order of magnitude.

Severe impact tests made at comparatively low temperatures have indicated substantially better performance of beams that were carefully welded by the aforementioned sequence, which eliminated the holes in the web. However, this sequence and procedure involve additional cost. If quite careful control is not exercised and serious defects are permitted to remain in the flanges, the results of using this method are likely to be inferior to the results of the method using the coped holes.

The shape of coped holes shown in Figure 12 is one that has been used rather extensively in Europe. The most common American practice has been to make these coped holes of a semicircular shape, with the diameter of the semicircle in the plane of the inner face of the flange. There seems to be no evidence from research or experience

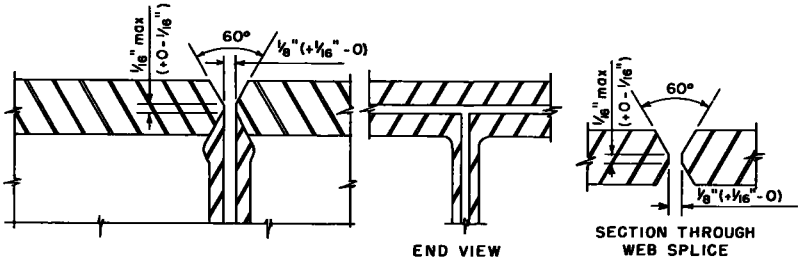

Figure 14. Modified procedure for preparing beam ends and butt welding splices

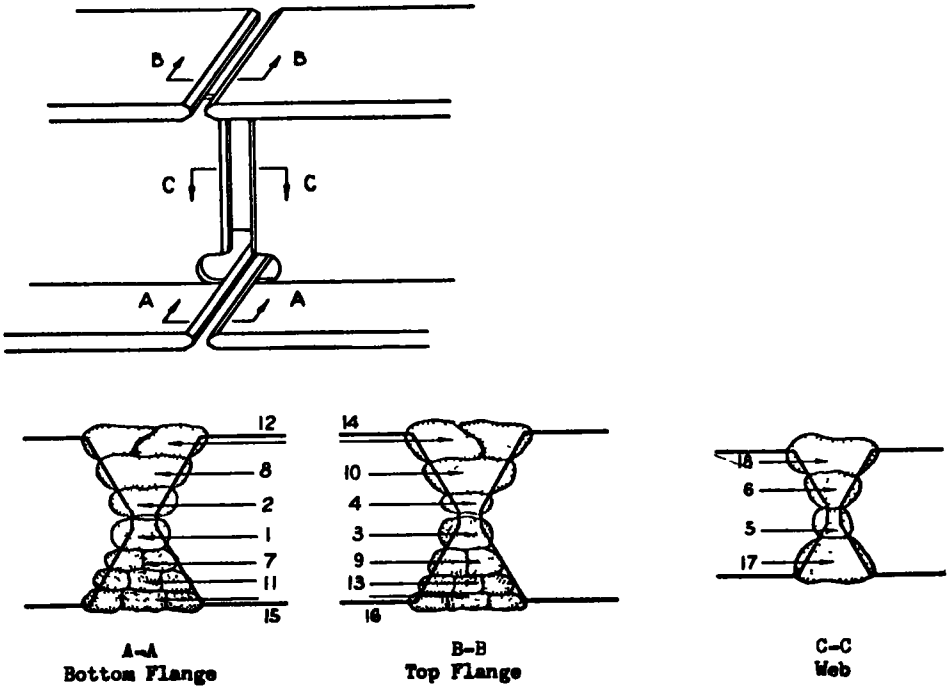

Figure 15 Sequence for welding splice in heavy beam with heavy flanges.

to indicate any superiority for either one of these shapes. The low-temperature impact strength or resistance to brittle fracture would be decreased appreciably by either kind of stress raiser (coped holes or sizable internal weld defects), and likewise the fatigue resistance would no doubt be reduced somewhat although probably not enough to be of significance in a highway bridge. Defects that constitute sharp-notch effects in the extreme fibers or surfaces of a member seem to be more influential in reducing fatigue resistance than internal defects.

During the making of a splice in a beam or girder, the shrinkage forces should be balanced in such a way that a vertical sag or hump is not created at the location of the splice. In a field web splice, this involves backstepping; that is, progressing downward along the length of the web joint but depositing each increment with an upward direction of travel. In a shop splice, welding can be started in the middle of the web and carried alternately or simultaneously in both directions toward the edge of the web plate.

In flange field splices, the welding is done alternately on one flange and then the other. In the interest of practicality, more than one pass or layer of welding is deposited in one flange by the welder before he moves to the other flange. This procedure can be used to a reasonable extent to reduce costs without excessive distortion. Figure 12 shows a typical example of a welding sequence that can be used to make a splice; passes 1 and 2 are placed in the web, the flanges are then completed, and the web is finished last. Other procedures, particularly in deep girders with heavy flanges, start the welding on the flanges and continue until the web gap closes to approximately ⅛ in. At that time the web is completed with a balanced welding sequence as shown in Figure 15, where passes 1 and 2 may be put in the top flange and 3 and 4 in the bottom flange.

When the web splice is welded first, the web plate must be prevented from buckling during shrinkage of flange splice welds. An expedient for doing this is to heat the web in the immediate region of the web weld just prior to and during the welding of the flanges

so that the web weld can shrink along with the flange welds. This may be particularly helpful where the splices in the flanges and the web are staggered (Fig. 16), especially in comparatively light deep girders. When this method is used, an attempt should be made to assemble the parts in such a way that, after the web has been heated, the root spacing of the flange weld grooves will be correct.

Another expedient that can be used is simply to tack weld the vertical web stiffness in place on either side of the splice and to defer the final complete welding of these two stiffeners or pairs of stiffeners until all of the splice welding has been completed. The final welding of these web stiffeners will then assist in pulling out any slight buckle remaining in the web plate.

In making splices in large rolled steel beams or in built-up girders, some fabricators and erectors have preferred to deposit several passes in each of the flanges before starting the welding in the web splice. This procedure has been approved by some state highway departments. When this is done, some states require that both flanges be preheated locally and kept hot, in the vicinity of the web splice, until several passes have been made in the web splice weld. This preheating is done so that the flanges will contract at the same time the web weld is shrinking and that severe restraint that might result in cracking at the web weld is thereby avoided.

After the welding of a beam or girder splice has once been started, the safest practice is to continue it without interruption until the entire splice has been completed, including the web and both flanges.

Following an improper welding sequence can create conditions that make proper fitting of some of the members difficult or impossible at welded splices or connections. The important point to remember is that weld shrinkage cannot be avoided; however, a sequence can be used that will minimize distortion and buckling in the finished girder or beam. An example of this, shown in Figure 17, is a bridge with 4 lines of main beams or girders spaced apart and held in correct position by several lines of transverse diaphragms in each span or section of the deck of the bridge. If the diaphragms were all welded to the main girders prior to the fitting at the splices in the main girders, minor

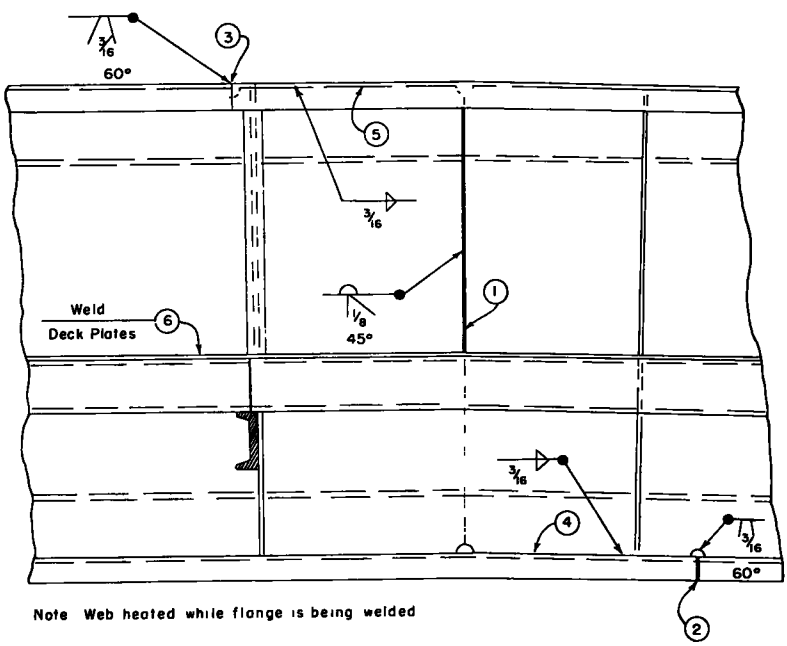

Figure 16 Sequence for welding splice in girder of pedestrian overhead bridge

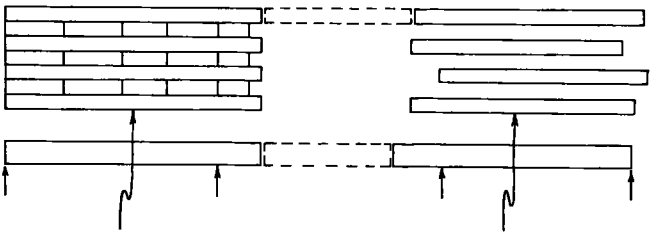

Figure 17. Sequence for welding four main girders separated by transverse diaphragms

unavoidable inaccuracies in fabrication would make it difficult or impossible to fit the joints properly at the splices of the main girders.

Figure 18 shows a sequence for assembly welding of a light truss. This sequence involves the symmetrical welding of various joints starting at the middle of the truss, progressing in both directions toward the ends, and making connections to the top and bottom chords at the same time at any panel point. Prior to assembly, all gussets and separators are welded in the chord members. Likewise, all separators are welded in the posts and diagonals so that the individual members can shrink during welding before they are assembled to make up the truss. Inasmuch as the web members are welded to gusset plates that project out from the chord members, the matter of a welding sequence is not as critical as it might be if the web members were welded directly to the chord members. Therefore, all of the welding on one side of a truss can be completed, in the interests of practicality, before the truss is turned over for the other side to be welded in a similar manner.

Departures may also be made from an ideal welding sequence without resulting in objectionable distortion under other conditions such as where the amount of welding and the accompanying shrinkage forces are relatively small as compared with the stiffness of parts available to resist the shrinkage forces, or where substantial welding fixtures are used to prevent parts from bowing. Also, when a welding procedure involving relatively high rates of heat input and relatively high rates of travel speed is used, the heat is maintained more concentrated along the line of the joint. If the material is not too thick (for example, a relatively thin web of a girder in which web-to-flange welds are being made), the welding heat on one side of the web will penetrate rather well through the thickness of the material. Because the flange is restrained by a substantial fixture from "cocking" or twisting with respect to the plane of the web and because the heat penetrates quite well through the thickness of the web, the welding can be carried from one end of the girder to the other on one side of the web before welding is started from the other side of the web.

This is quite commonly done with good results in the shop fabrication of built-up girders where enough duplication is involved to make it practical to construct suitable jigs and fixtures and, perhaps, positioning devices to fit the parts together accurately, hold them securely in the proper relative position during welding, and rotate or tilt the girder section into the most advantageous position for rapid, flat position welding. A typical fixture of this kind is shown in Figure 4. The cross section of a heavy girder in that figure indicates that each of the 4 fillet welds could be made complete, one at a time, in the sequence indicated and still produce a completed beam free of distortion.

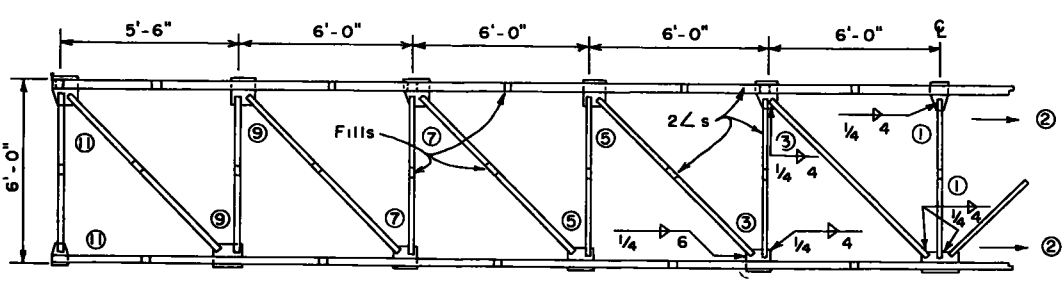

Figure 18. Sequence for joint welding light truss

The welding in this case was done by the submerged arc welding process. Specifications commonly require that when the base metal is more than 2 in. thick it must be preheated to at least 100 F. The entire girder or its flange plates need not be preheated in advance of the beginning of welding operations. The preheat is applied locally and progressively immediately ahead of the arc by means of a heating or welding torch. Temperature-indicating crayons or pellets are usually used during the adjusting of the heating torch so that it will provide the desired amount of preheat temperature in the metal, while traveling at the same speed as that to be used for the arc welding that follows immediately behind. Whether the correct preheat temperature has been produced is determined by making marks on the steel material or placing pellets on it immediately after the flame has passed the location where the preheat temperature is to be ascertained, but not until the torch has proceeded far enough that the flame will not wash back over the crayon marks or pellets. When an A-514 steel is considered for use, it should be made the subject of a special investigation for the complete control of temperature during welding.

7
Control of Distortion

Although some of the distortions in welded structures are caused by dimensional errors in fabrication and other general features of improper workmanship, which would cause distortion in any type of structure, some distortion results from the effects of expansion, upsetting, and contraction of heated metal that occur during the welding operations and soon afterward. Therefore, to exercise control over such distortion and to apply suitable methods for correcting any distortion that does occur, one should have an understanding of the effects of applying heat to steel material.

These effects of expansion, upsetting, and contraction caused by localized application of heat can be illustrated by the behavior of a bar of metal (Fig. 19) on which heat is applied locally either by welding or by an oxyacetylene heating torch as it is applied sometimes in the removal of distortion. The portion of metal to which heat is being applied is surrounded by rigid cooler metal, which restrains the heated portion and prevents it from expanding freely. Therefore, the heated metal is upset and becomes shorter but a little thicker because the volume of the heated metal remains substantially constant. As local heat is applied, the heated portion will expand somewhat before it is upset, and the temporary increase in length of the fibers on the heated side of the neutral axis of the bar will cause it to bend (convex upward if the heat is applied on the upper side of the bar). As a result of the shortening of fibers caused by the upsetting, however, subsequent contraction during cooling will produce a final bending or alignment, which in this case is convex downward. If suitable heat is applied in a subsequent operation from the opposite side of the bar, obviously the bar can be straightened to its original alignment. Of course, when weld metal is added, as in arc welding, at the localized area shown in Figure 19, the shrinkage of the weld metal on cooling is additive to the shrinkage of the base metal during cooling.

Another effect of expansion, upsetting, and contraction is the tendency for warping or buckling in a panel of plating to which heat has been applied by welding along one or more of the 4 edges of the panel. Figure 20 shows a panel of plating between the top and bottom flanges of a girder and vertical stiffeners. Because all 4 boundaries are "shrunk" or reduced in length by welding and there is no compensating shrinkage along a horizontal or vertical axis through the middle of the panel or plating, each of these axes will be longer than the 2 edges of the panel that are parallel to it. Obviously, this will tend to cause buckling or warping in the panel.

Computations involving the coefficient of expansion of steel and its yield point at various elevated temperatures can show that the heating of one portion of a member to a temperature not much more than 200 F above adjacent portions can cause permanent distortions of the kind described. However, because such a sharp temperature gradient

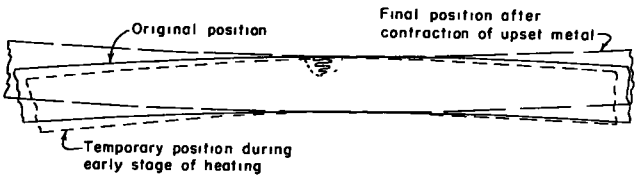

Figure 19 Expansion, upsetting, and contraction of locally heated bar.

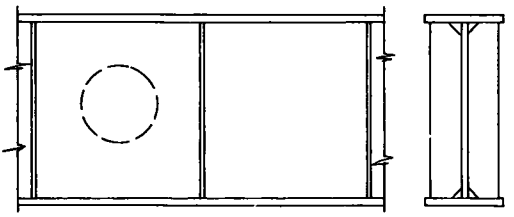

Figure 20 Panel of plating between top and bottom girder flanges.

is impossible to produce in the steel material so that one portion would be 200 F hotter than another portion immediately adjacent to it, a temperature differential of at least 300 or 400 F must be produced to cause appreciable upsetting of localized heated areas in the manner described.

During cooling from quite a high temperature and while the heated member is still at such a high temperature that its yield point is very low, the contraction forces will likewise cause the hot metal to undergo some stretching that will compensate for part of the upsetting. Therefore, the permanent distortion occurs largely after the heated metal has cooled to a temperature of only a few hundred deg F, especially if the part or member that has received the localized heat is clamped or otherwise restrained. Although some manifestation of these phenomena is inevitable, the degree of distortion can usually be controlled by various means so that it will not be objectionable and, in many cases, will hardly be perceptible.

Distortion occurs in all weldments but can vary widely in degree depending on heat input, welding methods, and sequence. Distortion can be roughly divided into 3 common classes: angular, longitudinal bowing, and buckling.

Angular distortion is defined as the angular change in the relative position of members extending from a weld area, for example, on stiffener-to-web weld. Angular distortion, in general, is decreased (a) by using the minimum amount of weld metal required to gain the desired joint strength, (b) by depositing the weld metal in the fewest possible number of layers, (c) by avoiding as much as possible the weld profile with the very narrow root and the wide face, (d) by balancing the amount of weld metal about the neutral axis of the joint, and (e) by presetting the members at a slight angle opposite to that expected to develop as a result of welding.

Longitudinal distortion is controlled by balancing welds about the neutral axis of the member. When welds of unequal size must be made at uneven distances from the neutral axis, the opposing stresses should be balanced first by depositing welds closest to the neutral axis and then by making the welds that are farther away from the neutral axis smaller in size. Prebending or cambering the member in a bow opposite to that which will develop from welding often is a practical recourse. It is well to remember that the hot side will finally become the short side.

Buckling occurs in a thin sheet often during welding but not in a heavy plate. The buckling is caused by the well-known inability of laterally unsupported sheet to resist compressive stress without buckling (column failure). Compressive shrinkage stress in regions near the weld accounts for the buckling. Wandering sequence is a corrective for this type of distortion. Making the welds alternately on opposite sides of a part instead of making all of them in a strict succession, often will reduce distortion. The distortion of the weld on the opposite side may neutralize the distortion created by the first weld. Furthermore, when welding is resumed on the first side, the temperature will have fallen and less of the metal will enter the plastic range during subsequent welding.

The advisability of properly balancing the amounts of welding in both design and construction has been discussed in a previous chapter. Also discussed in an earlier chapter is the arrangement of sequences for making various welded joints in an assembly so that relatively free shrinkage can occur in some parts or members before they are tied into the complete assembly, especially if the assemblies are comparatively large and the shrinkage might accumulate and cause loss of dimension or cause contraction forces to be exerted so that the parts of the assembly are pulled out of shape or proper alignment. The importance of proper fitting of welded joints to provide uniform grooves and correct overall dimensions after shrinkage has taken place has been stressed. It has also been emphasized that while an assembly is being welded it must be supported prop-

erly and held in the correct shape. Otherwise, it will simply be "locked" in an improper shape or alignment by the welding together of the various parts.

When the heat of welding cannot be balanced in a way that will prevent bowing or other types of distortion, a part or member may sometimes have to be presprung or preset sufficiently in the direction opposite to compensate for the anticipated distortion so that the part or member will be properly aligned after welding has been completed and the parts have cooled to uniform temperature.

Sometimes, if the weldment is comparatively large or complex, the entire weldment can be divided into several subassemblies so that comparatively free shrinkage can occur in each subassembly because it has not yet been joined to other parts that would restrain such shrinkage and develop distortion. It may be helpful to visualize the weld shrinkage as taking place about the 3 major axes (X, Y, and Z) of the entire assembly. Then subassemblies can be arranged so that all of the shrinkage along the X-axis will take place independently during one series of welding operations, the shrinkage along the Y-axis can take place during the next series, and the shrinkage along the Z-axis will take place during the final series. Perhaps weld shrinkage will occur only about 2 axes.

For example, when the parts of a large welded pedestal are assembled and welded for the support of bearing shoes or rockers, there may be a bottom bearing plate and a top bearing plate or sole plate with a cratelike assembly of vertical webs and stiffeners in between the 2 plates. If the vertical plates and stiffeners are welded together first, shrinkage in a horizontal direction can be made to occur quite freely between the intersecting vertical webs and stiffeners. Then, when this assembly of vertical webs and stiffeners is welded to the bearing plates, welding can be started at the middle of the bearing plate and made to progress outward in all directions toward the edges so that the shrinkage of this welding will not be unduly restrained.

The effect of preheating has been discussed previously and, although preheating may help to minimize distortion in some cases, care must be exercised in local preheating to make sure that the resulting shrinkage will not add to the shrinkage of the welding and possibly cause worse distortion, or even weld cracking.

Accurate fitting of joints and also a judicious amount of restraint against the shrinkage across a welded joint, such as a butt joint, will help to minimize loss of dimension. With considerable experience based on uniform control of fitting, welding procedures, and sequences, one can sometimes predict overall shrinkage and loss of dimension. Any rules that have been developed for predicting such loss of dimension in any particular fabricating shop, however, have been based largely on that shop's routine procedures and may not apply in another shop. Nevertheless, it is desirable to make the best estimate possible for such loss of dimension in a welded assembly that is quite large. Then, unless a sufficient background of experience exists in that particular kind and size of weldment, it is advisable, even under the best conditions of control, to provide extra stock at final closing joints to permit accurate trimming to length after most of the weld shrinkage has occurred.

Locked-up residual stresses are inevitably created in shapes while they are being rolled and cooled in a steel mill. The introduction of welding heat may possibly release some of these locked-up stresses, with resulting distortion that is difficult, if not impossible, to predict. In such cases, corrective measures must be applied.

Peening of welds is sometimes used to prevent cracking or distortion of heavy weldments. Most specifications prohibit peening of the first pass because of the danger of cracking the weld. Peening of the cover or final pass is prohibited because it interferes with inspection of the surface for cracks and porosity and because peening or working of the weld metal or plate drastically impairs the impact properties of the material. Peening has long been a controversial subject, but the following results of recent investigations have clarified the problem considerably.

1. Peening considerably reduces toughness and impact properties of weld metal in the as-peened condition, but the adverse effect caused by peening will be eliminated by a subsequent covering weld layer.

2. Peening is ineffective in reducing residual stresses unless the last layer is peened after cooling.

3. Peening will reduce distortion, however, it is not the only means of so doing. Preheat, proper welding sequence, and restraint by clip are also ways of controlling distortion.

4. Peening can be used to prevent "lamellar" pull-out, or tearing of the weld from the parent material, by reducing the weld metal shrinkage.

The AWS Bridge Specifications permit peening to be used on intermediate layers for control of shrinkage stresses in thick welds to prevent cracking. It prohibits peening on root or surface layers or in the base material at the edge of the weld. Care must be taken to prevent overlapping or cracking of the weld base or base material.

Sometimes temporary fitting or holding devices used for distortion control can be removed as soon as sufficient weld metal has been deposited to hold parts together firmly. This may be necessary to provide suitable clearances for welding. In other cases, it may be necessary to leave a part or member in a jig or fixture where the welding is done until the part has cooled to almost uniform temperature to prevent distortion during the latter stages of cooling. Temperature differences of little more than 200 F may be sufficient to cause distortion.

At one time clauses in some welding specifications indicated that preheating and post-heating along one side of a welded joint, such as a joint between the web and flange of a girder, might be used to prevent differential contraction between the 2 parts being joined and thereby to reduce residual stress. This seems to have been fallacious reasoning. Carefully controlled research has shown that the residual stress in a butt weld is not altered by preheating plating on one side of the joint in such a way that would minimize differential contraction.

Sometimes preheating can be used to help control distortion. For example, the heat input can be balanced in the making of welded joints that are not symmetrical about the neutral axis of a section by preheating or by heating simultaneously with the welding operation on the opposite side of the neutral axis.

One of the most important things is that distortion control should be exercised over all fabricating, fitting, and erection operations. Simply giving attention to welding operations alone may cause conditions that make such control impossible. Frequently, welding is blamed for distortion caused by improper handling that produces bends or kinks. Likewise, the forcing of a fit in such a way that parts are pulled out of line and then the welding of them together in a distorted condition are actually responsible for the distortion rather than the expansion, upsetting, and contraction at the welded joint. Distortion sometimes results from unbalanced applications of oxyacetylene cutting. For example, if oxyacetylene trimming of one edge of the web plate of a girder is done before and not at the same time of the trimming of the other edge, the web plate may be buckled. Then when the parts are fitted and welded together, the buckling of the web plate, which was really produced by unbalanced application of heat in oxygen cutting, may be blamed erroneously on the effects of welding. Therefore, it is important that operations prior to welding be done properly and in such a way that no conditions are set up that will result in distortion in the final structure.

8
Correction of Distortion

In welded bridge construction, distortion can usually be held within acceptable limits if care is exercised during fabrication and erection operations. Sometimes, however, distortion has not been anticipated and proper steps were not taken to prevent it. Also, there may be some comparatively light members, perhaps with unbalanced welding, for which objectionable distortion is virtually impossible, or at least impractical, to prevent during construction.

If reasonable care is exercised during construction, any distortions experienced in welded bridge construction are likely to be objectionable only from an appearance viewpoint, for example, the appearance of excessive buckling or warping of the webs of plate girders. Seldom is distortion great enough to affect seriously the strength of a main member or another important part of a bridge. However, the function of the member involved and the effect the distortion might have on its structural adequacy should be considered carefully.

Before corrective measures are applied to remove any objectionable distortion, careful analysis should be made to determine the cause. Sometimes the cause of the distortion will have an important bearing on the methods used to correct it. For example, if fitting has been forced between a member that frames into another member perpendicular to it and if this has resulted in lateral bowing of the supporting member, the only effective measure for correction may be to cut the joint and refit the parts correctly. This may involve building up one part, such as a bevel edge for a groove weld, or completely replacing a part with one of suitable length, or cutting a part that is too short back several inches and splicing it with an extension to provide the proper length for fitting to the other part or member involved.

Distortion in the form of bowing or warping caused by expansion, upsetting, and contraction can usually be corrected by the use of external force or the application of heat or a combination of the two methods. Peening has been used occasionally during and after welding operations to control or correct distortion. However, it should only be used for control of distortion when special care can be exercised to prevent damage of the kinds mentioned previously. Because peening of base metal or surface passes of weld metal is prohibited and cannot be done without lowering the notch toughness of the metal, there appear to be no opportunities for using peening safely to correct distortion.

One of the most common methods for removing bending or bowing distortion by means of external force is to straighten a distorted piece in a press such as a "gag-press" or "bulldozer." Force may be applied also by means of jacks, cables, turnbuckles, and other devices. If a member is badly bowed or bent, the amount of bending required to straighten it cold may be enough to cause fracturing or excessive strain hardening. In such cases, unless the member is so badly damaged that it should be discarded, the straightening might be done with parts of the member heated above a red temperature at the point where the bending and consequent stretching of the metal is to be done. This kind of an operation is an example of combining external force with heating.

External force with heating, when it is practical to apply, is usually a more efficient method for removing a considerable amount of bending or bowing distortion than the "flame straightening" or "flame shrinking" method. Care must be exercised in applying any of these methods to members that are carrying stress, particularly when a considerable portion of the member must be heated to what might be called a "forging" temperature. If a part were buckled under compressive stress caused by internally balanced reaction stresses that have resulted from improper fitting or from an accumulation of shrinkage, obviously, the member might buckle worse and perhaps fail if a considerable portion of it were heated to such a degree.

Flame straightening is deliberately applied for controlled shrinkage and should be limited to A-36 or other grades of mild steel only. It is used to shrink specific portions of plates or structural members for the purpose of reversing or correcting existing distortion. The mechanism of the straightening operation is exactly that which occurs during welding and causes distortion. A localized area of metal is usually torch heated to a high temperature. During heating, the localized area must expand, but it is constrained by the colder, stronger surrounding metal. Consequently, the heated area is easily forced to upset. This upsetting manifests itself by bulging at the heated surfaces, but the degree of bulging usually is too small to be easily detected by eye. When the localized area reaches a reasonable red heat, possibly 1,200 to 1,400 F, the heating must be stopped to confine the upsetting to the desired area. Incidentally, some further distortion in the same unwanted direction may appear in the member at this point, but this should be ignored for the moment. The heated area undergoes contraction as it cools, as would be expected.

But, because the upset that results from heating is not equally reversible on cooling, a net shrinkage results that tends to pull the surrounding metal inward. Thus the movement of the member in this direction will be greater than the movement in the opposite, unwanted direction during heating. The effect is more pronounced if the upset area is quenched shortly after heating. Obviously, the final outcome of this thermal exposure is a deliberately applied shrinkage. If the amount of metal in the localized, heated area is properly judged, or if the number of areas of shrinkage are properly estimated, the total shrinkage will produce a controlled distortion. This movement may correct a distortion that occurred earlier in welding or by some unexpected mechanical action. The deliberate, controlled distortion may be used in lieu of a press to bend or shape a member. In many cases, an oxy-fuel torch can do as much straightening or bending on large metal sections as that done by a very large press.

When thermal straightening is applied to a weldment, both the location and the shape of the localized heated area are very important in determining the final movement of the member of the entire structure. Considerable skill in straightening or bending can be developed through experience. The only general rule that can be offered to guide this operation is that the hot side or heated side finally will be the short side.

To prevent undesirable metallurgical effects requires that heating of these areas to very high temperatures be avoided. The AWS Bridge Specifications prohibit heating to over 1,200 F (dull red) for steel such as A-36, A-441, and A-588 and specify a maximum of 1,100 F for 100,000 yield steels of the A-514 classes.

High temperatures should also be avoided in the interests of efficiency because the additional cost of gases and labor required for the excess heating is simply wasted. From the viewpoint of efficiency, the metal being heated in flame-straightening operations need not be raised even to a low-forging temperature or yellow heat. All that is required is to create a few hundred degrees difference in temperature between the area being heated and the surrounding area. Because it is convenient to judge the temperature of metal by its color, the practical criterion is to heat the small area only until one can begin to perceive a dull red color, which will not be more than 1,200 F.

Flame-shrinking operations can be speeded up if the heated area is quenched immediately after the desired temperature has been reached. Frequently, water is sprayed on the area or it is swabbed with wet burlap. This simply cools the heated area and restores its yield-point strength so rapidly that it cannot stretch back under the contraction forces of surrounding material that has been heated to a moderate extent. It does not speed up operations as much as some workmen have supposed. Preferably any kind of quenching should be avoided in conjunction with flame straightening for several reasons. Steel that has been heated close to its critical temperature can be hardened, with a loss of ductility, by rapid quenching. The temperature of steel is difficult to judge by color in bright sunlight, and the heating may have been carried to a somewhat higher temperature than that required for the flame-straightening action to occur. If quenching is used, careful control should be exercised over the entire flame-straightening operation. Most specifications prohibit the use of quenching.

The most effective, as well as the most desirable, pattern for applying the heat is a V-shaped area. As shown in Figure 21, the base or widest part of the V-shaped

pattern is made at the edge of the member where the fibers are to be shortened most by the flame-straightening operation. For instance, if a bar or beam is distorted so that it has a convex upward bow, the fibers on the upper side must be shortened to bring the desired correction. It would appear that the triangle-shaped heats should extend at least to the neutral axis of the member being straightened to be most effective, or perhaps even somewhat beyond the neutral axis, although the results desired can be obtained when the pattern does not extend this far from the edge where the major contraction is to be produced.

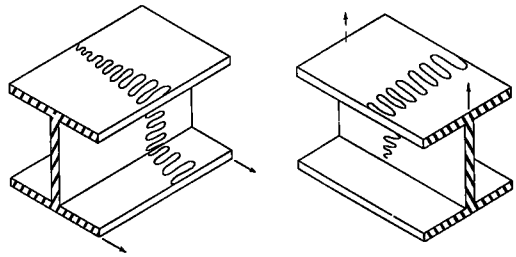

Figure 21. Ideal patterns of heating Arrows show direction of movement of ends of beam during contraction of metal that has been upset during heating.

In the application of the heat, the apex of the triangular pattern is heated and the torch is guided in a zig-zag or weaving manner gradually progressing toward the base of the triangle. Heating several adjacent V-shaped patterns of comparatively narrow width is usually more effective than heating a single wider V-shaped pattern, unless the kink or bend to be removed is very sharp. In that case, the distorted part should be examined carefully to make sure that the sharp kinking has not resulted in at least incipient tearing or excessive cold working, which would indicate that the piece should be rejected or some other method adopted for repairing it.

Buckling distortion can be removed from panels of plating by heating a series of comparatively small spots around the periphery of the plating. The operator should skip around so that the heating of each spot is localized without bringing the whole panel of plating or a large part of it up to a rather high temperature. After the metal has cooled, another series of spots can be heated, if necessary, somewhat nearer the middle of the panel than the first series of spots. Such a heating pattern is shown in Figure 22 (bottom).

If a transverse force or a transverse restraint is applied to a buckled area by means of a jack or temporary stiffeners, heat applied first at the middle of the buckle may be effective. This also may be of advantage where comparatively heavy web plates are to be straightened.

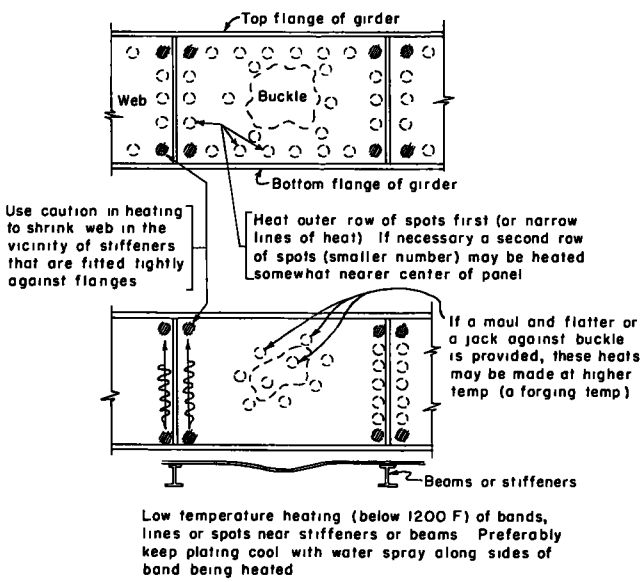

Figure 22 Heating to remove buckling distortion

Figure 22 (top) shows that line heats can be made adjacent to the stiffened edges of the panel of plating; the temperature of the heating is kept considerably lower than that ordinarily used in the flame-straightening operation. The response involved in this latter method is quite similar to that in the low-temperature, stress-relieving method. The procedure has been used for many years to remove buckling distortion from panels of plating, without any consideration being given to the fact that it does reduce residual stresses. The process involved is simply that heat is applied adjacent to a line of welding, such as the welds joining a stiffener to a panel of plating. The heat usually is applied on either side of the stiffener welds in such a manner that it exerts a kind of internal jacking

operation, while the welded joint itself remains at a cooler temperature. This internal jacking force actually stretches the metal longitudinally in the immediate vicinity of the welded joint, thus compensating for the small amount of permanent upsetting and contraction that occurred when the weld was made. Application of this method is shown in Figure 22 (bottom).

Very careful control should be exercised in the application of any of these methods for correcting distortion. In any event, the results should be observed during intermediate stages after the parts have cooled to make sure that the operations are not being carried too far. If they are, the final result could be worse than the initial condition of distortion, and perhaps even of serious consequence.

For certain applications the fabricator is required to furnish stringers and girders to a specified horizontal curvature. The rolled beams or welded plate girders can be fabricated as straight members then curved to a specified horizontal curvature utilizing flame shrinking. This process is generally limited by specification to some minimum radius of curvature but has been used to 300-ft radius for rolled beams and 600-ft radius for plate girders. The member to be curved may be supported with webs placed vertically or laid on their sides to take advantage of the dead load of the member during the heating process. In general, it is not considered worthwhile to lay a member down for heating unless a radius of 1,000 feet or less is required. Curvature measurement must be made while the member is supported with the web vertical.

Heating should be done with large rosebud heating tips (approximately 1 in.) to effectively heat localized areas as quickly as possible to achieve maximum upsetting of the metal. Triangle heating patterns should be used with the base of the triangle at the edge of the flange to be shortened. The apex should be located a fourth of the flange width beyond the intersection of the web and flange but should not extend more than 4 in. beyond the web in any case. For members with specified radii greater than 1,000 ft, the apex may be located over the junction of the web and flange.

The heating should begin at the apex of the triangle and progress slowly toward the base gradually spreading with an included angle of approximately 15 deg. The base of the triangle should not exceed 8 in. regardless of flange width. The heating patterns should be spaced uniformly along the full length of the flanges to produce a uniform circular (not parabolic) curvature. Although this procedure will produce an obvious chord effect, it should produce patterns spaced closely enough to achieve an aesthetically pleasing effect. In other words, several narrow patterns are preferred to a few wide patterns.

The maximum temperature of the spots should not exceed 1,150 F (dull red) as measured with a temper stick. Cooling of the patterns may be accelerated by the use of dry air when the temperature reaches 600 F or less. The use of water or steam or the like is not recommended.

Properly applied, this process allows the fabricator to produce girders or beams to a required curvature at lower material and fabrication costs.

9

Defects in Arc Welds in Mild and Low-Alloy Steels

Control over welding to avoid defects should commence in the design and drafting office, where it should be stressed that details of design must be arranged so that the welds are accessible for the welder to deposit sound metal. As in other kinds of construction, defects may occur now and then despite engineering control. This chapter outlines the cause, significance, prevention, and correction of weld defects.

INCOMPLETE PENETRATION

Description

Incomplete penetration occurs when the weld metal fails to penetrate the root of a joint, or fails to fuse completely with the root faces of the parent plate. As a result, voids or slag inclusions may exist at the root zone of the weld.

Cause and Prevention

Figure 23 shows examples of incomplete penetration. In the single-pass horizontal fillet weld, too large a weld was made in one pass. The lack of penetration or bridging may also have been caused by too large an electrode, insufficient welding current, or a high rate of travel in welding. The submerged arc welds were not centered on the joint.

Effective penetration depends on the use of the correct electrode size in relationship to the form of the joint, the correct welding current, and, in the case of groove welds, suitable joint preparation to allow proper manipulation of the electrode. Accuracy of joint preparation and fit-up are most important and should be as specified.

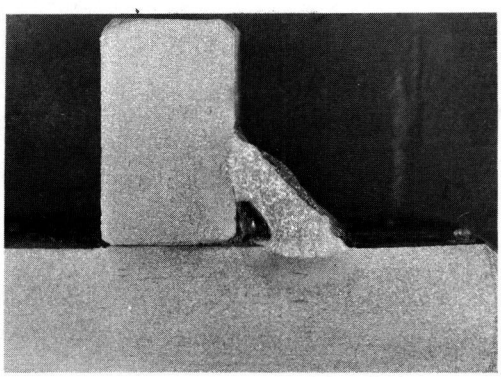

single-pass horizontal fillet weld

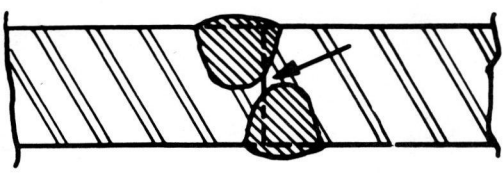

submerged arc welds

Figure 23. Incomplete penetration.

According to the AWS Bridge Specifications, complete penetration in groove welds welded from both sides is obtained by chipping out or gouging the back of the first pass before the root pass on the opposite side of the joint is deposited. The groove thus formed at the back of the joint should expose the sound metal of the first pass and should allow defective manipulation of the electrode and full penetration of the weld metal. Undue chipping or gouging is avoided if the root faces and root opening of prepared joint grooves are maintained within specified limits.

In fillet welds the use of insufficient welding current or too large an electrode may result in lack of penetration at the root. Use of a small electrode does not lead necessarily to improved penetration, however, and the largest size of electrode consistent with proper manipulation and heat-absorbing capacity of the work should always be used. Slag inclusions and cracking are frequently associated with poor

penetration in the root zone of fillet welds. In extreme cases, use of very low welding current may result in a large void being formed by the weld metal bridging the fusion faces.

Where automatic welding is used, care must be taken to set the machine accurately to follow the line of the joint; otherwise, lack of penetration may occur because the welds are offset from the centerline of the joint.

Effect on Strength

Incomplete penetration creates at the root of a weld a local geometric stress concentrator that reduces the fatigue strength of the joint. If very pronounced, this defect will reduce the static-load strength of a joint because of reduced effective throat area.

Correction

Lack of penetration can only be rectified by completely removing the defective portions of the weld and rewelding. Care should be taken that the recess formed by removing the defective metal allows adequate manipulation of the electrode and full penetration of weld metal. The surrounding surfaces should be properly cleaned before rewelding.

LACK OF FUSION

Description

Lack of fusion is a condition in which boundaries of unfused metal exist either between the parent metal and weld metal or between adjacent layers of weld metal. The term should not be confused with lack of penetration.

Cause and Prevention

Figure 24 shows an example of lack of fusion at the weld root and at the toe on the bottom plate of a single-pass fillet weld. Imperfect fusion may result from the presence of foreign matter (such as slag, oxides, mill scale, or other nonmetallic substances) that prevents the underlying metal from reaching fusion temperature. This can be avoided by making certain that the joint is perfectly clean.

Examples of mill scale are shown in Figure 25. Welding over loose mill scale may result in complete lack of fusion or extensive porosity or both because of moisture hydrated in the loose scale. Welds over tight scale may have re-entrants along the weld margin where the tight scale has hindered the wetting action in the weld puddle. Failure to remove scale at the point where 2 plates are joined by a fillet weld will frequently result in the generation of sufficient gas to produce wormholes in the fillet weld.

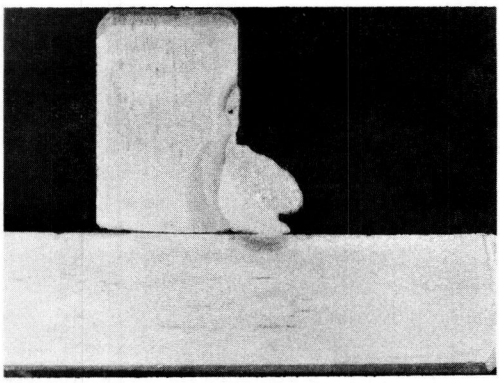

Figure 24. Lack of fusion.

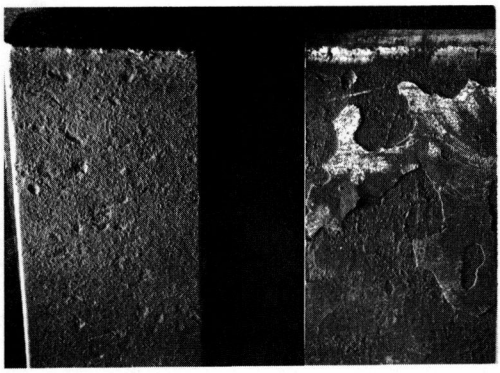

Figure 25. Tight and loose mill scale.

at toes of fillet weld made in flat position

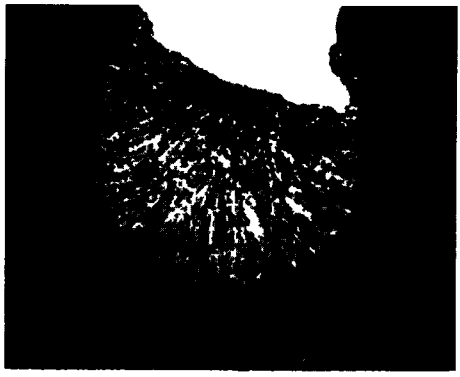

in first pass of multiple pass open square groove weld on a backing strip

Figure 26. Undercut.

In multiple pass welds, careful attention should be given to the removal of slag between the deposition of successive runs. If individual passes have excessively rough surfaces that hinder thorough slag removal, they should be chipped or ground before the deposition of further weld metal.

Also, use of the correct welding current is important in ensuring complete fusion of the weld metal and parent metal. Too low a current or an excessively high current may result in lack of fusion. If the current is too high, the rate of melting of the electrode tends to induce the welder or operator to employ an excessive welding speed, with the result that the weld metal is deposited on underlying metal that has not been heated sufficiently to reach fusion temperature.

Effect on Strength

Lack of fusion reduces the static strength of a joint to some degree and reduces the fatigue strength seriously.

Correction

Lack of fusion can only be rectified by completely removing the defective portions of the weld and rewelding. Care should be taken that the recess formed by removing the defective metal allows adequate manipulation of the electrode and full penetration of weld metal. The surrounding surfaces should be properly cleaned before rewelding.

UNDERCUT

Description

Undercut is the condition in which a local reduction in section of the base metal occurs alongside the weld deposit. The fault generally appears as a groove, either continuous or discontinuous. This condition may occur either on the surface of the base metal at the toes of a weld, or in the fusion faces of multiple pass welds. Figure 26 shows an example of undercutting at the toes of a fillet weld made in a flat position.

Cause and Prevention

Undercutting is most commonly associated with the use of excessive welding current, but it is also caused frequently by the welder's using an unsuitable type of electrode or an incorrect technique such as too rapid a welding speed, excessive side manipulation, too long an arc, or wrong angle of electrode. In certain circumstances the

defect may, however, be caused by the inherent welding characteristics of the electrode. Undercutting is also sometimes associated with the presence of heavy mill scale on the surface of the base metal.

Effect on Strength

The presence of a pronounced degree of undercutting may reduce the fatigue endurance of the joint a good deal and, therefore, should not be permitted. For static loading, however, the presence of very small and intermittent undercutting may usually be disregarded.

Correction

The defect may be rectified by adding further weld metal at the point where undercutting occurs. Deep undercutting should be chipped away before rewelding, particularly if it contains slag because slag will likely prevent complete fusion with the underlying metal. The additional weld metal deposited should conform in shape as nearly as possible to the general contour of the desired weld. When this defect is corrected by depositing a small weld bead, preheat may be necessary, especially for thick material that would cause rapid cooling of the weld deposit.

EDGE OF PLATE MELTED OFF

Description

This is a defect having a deficient weld size and sometimes an unsuitable weld profile. It occurs when the exposed corner of the parent plate is melted away along the length of the weld as a fillet weld is deposited in a lap joint. This results in a reduction of the thickness of the plate at the edge and consequently a deficient effective size of weld (Fig. 27).

Cause and Prevention

The defect may be caused by incorrect manipulation of the electrode or by using an electrode that is too large in relationship to the base metal thickness. A fillet weld is rather difficult to make along the edge of a plate of a size equal to the plate thickness. If a fillet weld is to be applied to the edge of a part, the designer should arrange, where possible, for the size of the weld to be at least $^1/_{16}$ in. less than the plate thickness to avoid melting the exposed corner.

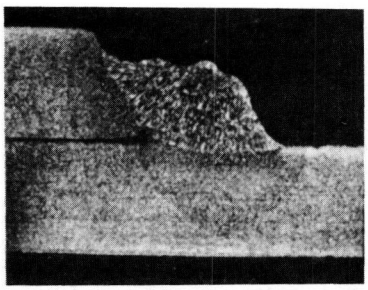

macrosection of faulty joint

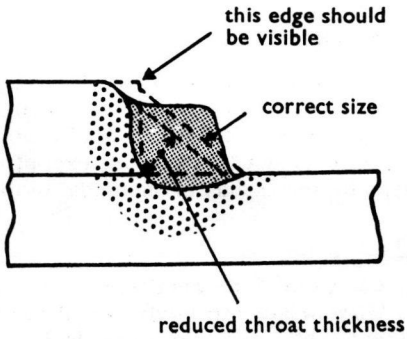

deficient throat of actual weld

Figure 27. Edge of plate melted off at lap joint.

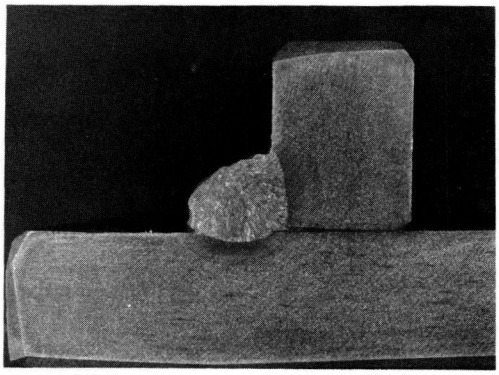

Figure 28. Overlap.

Effect on Strength

The static and fatigue strength of a welded lap joint will be reduced where the defect occurs, inasmuch as the effective throat will be reduced by the melting of the corner of the plate.

Correction

The defect can be rectified by depositing additional runs of weld metal and restoring the throat thickness to the correct size.

OVERLAP

Description

Overlap is an imperfection at a toe of a weld caused by an overflow of weld metal onto the surface of the base metal without fusing to it. An excess of weld metal extends beyond the limits of fusion at the surface of the plate. This condition may exist intermittently, or it may occur continuously along the welded joint. It is more often associated with fillet welds and results in an apparent increase in the size of the fillet weld. Figure 28 shows an example of an overlap defect in a single pass horizontal fillet weld.

Cause and Prevention

The defect frequently arises from an incorrect manipulation of the electrode; for example, in flat or horizontal fillet welding, the use of a wrong electrode angle will allow the weld metal to flow away from the fusion zone. Also, the use of too large an electrode in relationship to the position of welding may be a contributing factor. Overlap may also be caused by an incorrect welding current and arc length and too large a deposit in a single pass.

The welding speed employed should result in adequate fusion at the toes of a weld. Too low a welding speed may result in the weld metal flowing beyond the fusion zone and should be avoided. Too high a current may cause an increased melting rate of the overheated last portion of the electrode.

Single pass fillet welds larger than $^5/_{16}$ in. in leg size and made in the horizontal position tend to sag toward the base and cause overlapping at the toe of the horizontal leg. For horizontal fillet welds larger than $^5/_{16}$ in., more than one run is generally required, the exact number depending on the type of electrode and welding technique used.

Effect on Strength

Structural discontinuities of this kind at the toe of a weld will act as stress raisers and may adversely affect the fatigue strength of the joint. Under severe conditions of fatigue loading, the defect should not be permitted. In statically loaded joints, the effect of overlap may not be serious, except with regard to the effect on the size of the fillet welds. In any event, pronounced overlap should be considered as poor workmanship.

Correction

Overlap can usually be rectified by removing the excess weld metal. Care should be taken to leave a smooth surface and to avoid forming deep grinding marks in the weld or parent metal and also to avoid leaving the surface of the metal in a severely cold-worked condition. If overlap in a fillet weld has been accompanied by sagging of weld metal and reduced effective size, the correction section must be provided by depositing additional weld metal.

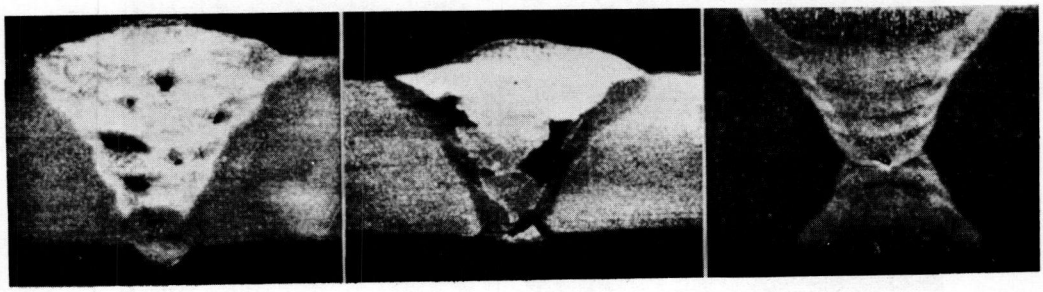

between passes | between passes and at sides of groove | at root of double-V groove weld

Figure 29. Slag inclusions in groove welds.

SLAG INCLUSION

Description

Slag inclusion is a defect in which any nonmetallic matter is included in the weld. In the shielded metal-arc welding process, the usual source of inclusion is the slag formed by the electrode covering. Figure 29 shows sections of welded joints and weld metal containing slag inclusions.

Cause and Prevention

Slag may be forced into the weld metal by the arc during the welding operation, in which case it will generally be finely dispersed throughout the weld and its presence in small amounts is not considered objectionable.

Slag may be trapped in cavities such as those formed by undercutting or even during preceding runs. In this case the inclusions are likely to appear as an elongated line of included slag that may be continuous or discontinuous. In multiple pass welds inclusions may occur as a result of imperfect cleaning of the slag between the deposition of successive runs. In this respect the shape and surface condition of the preceding runs are important.

Although the slag formed by the electrode covering is the chief source of inclusions in a weld, other nonmetallic matter may be included if the fusion faces or surrounding parent plate surfaces are not sufficiently clean. Heavy mill scale, loose rust, dirt and grit, and other substances that might affect the quality of the weld should be removed prior to welding. A slight layer of rust, light oxide film resulting from oxygen cutting, or a coating of linseed oil may usually be disregarded.

In preparing fusion faces, one should take care to leave the surface reasonably smooth and free from irregularities that would interfere with the deposition of the weld or be the cause of slag pockets or voids. Where manual oxygen cutting is employed, the torch should be adequately guided to ensure a smooth edge.

The welding characteristics of the electrode (particularly the viscosity of the slag, which affects the ease of control during welding) constitute an important factor in relationship to inclusions. The molten slag should float freely to the surface of the metal and be easily removable after solidification. Slag removal can generally be accomplished by wire brushing and light chipping. If, however, the weld surface is irregular or excessively convex, chipping or gouging the weld to a smooth surface may be necessary before depositing additional runs.

Slag inclusions are often associated with lack of penetration and, in this respect, full consideration should be given to those factors that are likely to cause poor penetration, that is, the use of too large an electrode, an inadequate welding groove angle, oversize root faces, and incorrect angle of electrode.

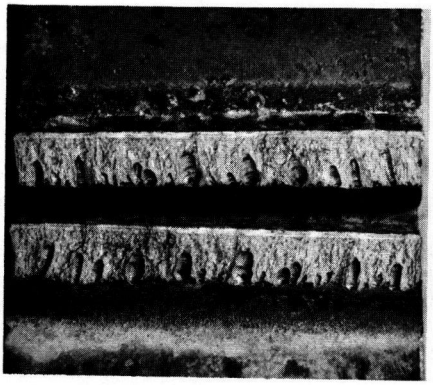

wormholes at root of fillet weld

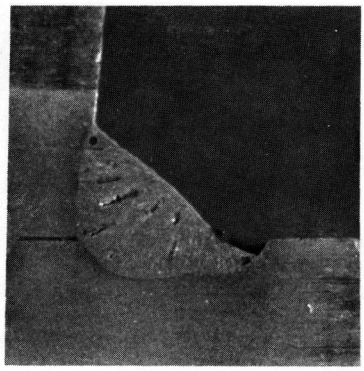

isolated cavities in groove weld

Figure 30. Porosity.

For the initial and intermediate layers of a butt weld, the electrode and its manipulation should provide a deposit with a uniformly flat or slightly concave surface.

Effect on Strength

The strength of a welded joint may be considerably reduced if large irregular inclusions or elongated lines of inclusions are present. These sometimes give rise to radiating hairline cracks. The presence of small, isolated, globular inclusions may not, however, seriously affect the strength of a joint and these normally may be disregarded.

Correction

To rectify welds containing serious slag inclusions requires that the defective portions be removed and rewelded. Care should be taken that the recess formed by removing the defective metal allows adequate manipulation of the electrode and full penetration of weld metal. The surrounding surfaces should be properly cleaned before rewelding.

POROSITY

Description

Porosity is the presence of cavities in the weld metal caused by the entrapment of gas. In general, porosity takes the form of small spherical cavities, either scattered throughout the weld or clustered in local regions. In some cases "wormholes" (Fig. 30), elongated or tubular gas cavities, or "blowholes", large, round, isolated gas cavities, may be present in the weld. These may be partially filled with slag.

Cause and Prevention

The formation of porosity is caused by the entrapment of gas evolved by chemical reaction during the welding process. A number of factors contribute to the occurrence of this defect. The composition of the parent plate and electrode core wire is important, particularly with regard to sulfur content; high sulfur readily promotes the formation of porosity. Excessive moisture content of the electrode covering will also give rise to this defect; stored electrodes must be maintained in a dry condition. If they become affected by dampness but are not otherwise damaged, they should only be used after being dried out in a manner approved by the manufacturer.

Use of too low welding currents, too long or too short arc lengths, or any other factor that promotes too rapid freezing of the weld metal will tend to produce porosity. Increasing the solidification period by using a higher current is sometimes advised; or increasing it by manipulation of the electrode to allow sufficient time for the gases in solution in the weld metal to escape is also advised. Attention should also be given to the condition of the fusion faces, which should be free from moisture, mill scale, or any other material likely to affect the quality of the weld.

Effect on Strength

If the effective load-carrying area of a welded joint is reduced or if serious stress raisers are introduced by the presence of excessive porosity, either blowholes or wormholes, the mechanical properties are likely to be reduced, particularly the fatigue strength.

Correction

Welds containing excessive porosity should be rectified by removing the defective portions of the weld and rewelding. Care should be taken that the recess formed by removing the defective metal allows adequate manipulation of the electrode and full penetration of weld metal. The surrounding surfaces should be properly cleaned before rewelding.

CRACKS

Description

Cracks in welded joints may occur in either the weld metal or the adjacent parent metal. They may occur by tearing while the metal is in a hot plastic condition (hot cracks) or by fracture after the metal has cooled to a lower temperature (cold cracks). Examples of cracks and their classification according to location are shown in Figure 31. Weld metal cracks may generally be classified as longitudinal, transverse, crater, and root cracks starting at defects such as slag inclusions, insufficient penetration, and poor fusion. Longitudinal cracks in a weld may occur as extensions of crater cracks. Base metal cracks normally are situated within the heat-affected zone of the material and may be either longitudinal or toe (adjacent to the edge of a weld), transverse, or underbead. Cracks in parent metal sometimes originate from cracks in the weld.

Cause and Prevention

Weld Metal Cracks—A tendency for weld metal to crack may be aggravated by the chemical composition of the base metal or electrode materials, but the direct cause of weld metal cracking is the localized stress in the joint arising from the shrinkage of the weld metal and the resistance to movement of the parts during welding. Careful consideration should be given, therefore, to the joint conditions and the degree of restraint opposing movement of the parts during weld shrinkage. The sequence of assembly welding should be such that shrinkage is allowed to take place without excessive restraint.

Individual passes, especially initial root passes, should be large enough to withstand shrinkage stresses. This is particularly important for welding heavy plates and sections or under conditions of restraint. Rapid cooling of the weld metal by conductivity and other chilling effects (that is, drafts and low temperature conditions) increases the tendency to cracking.

Poor fitting of parts or incorrect preparation of joints frequently results in poorly fused areas, lack of penetration, or slag inclusions in a weld. Hairline cracks may be initiated from these defects and progress through the depth of the weld. Longitudinal weld metal cracks are more likely to occur in the first layer of a weld than elsewhere. If not cut out and rewelded, they may spread through subsequent layers of weld metal. Cracks of this nature frequently result from unsatisfactory shape or position of the weld deposit. In such cases it may be necessary to change the welding procedure.

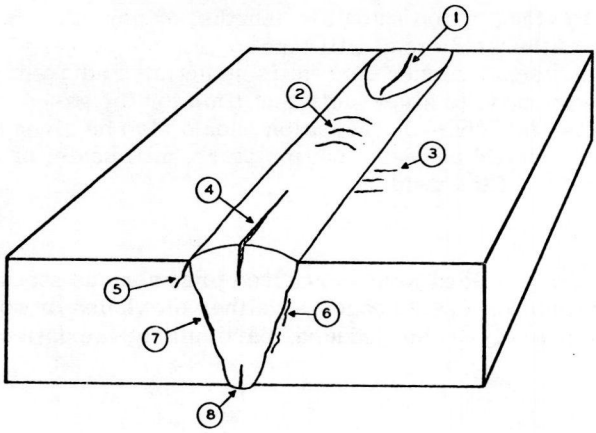

1. Weld metal crater cracking
2. Weld metal transverse cracking
3. Base metal transverse cracking
4. Weld metal longitudinal cracking
5. Base metal toe cracking
6. Base metal underbead cracking
7. Fusion line cracking
8. Weld metal root cracking

Classification of cracking according to location in weldment (3, Vol. II, p. 229)

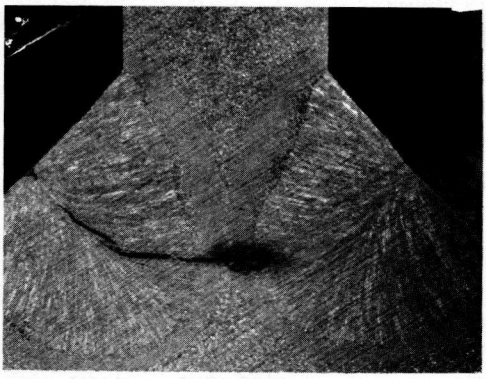

crack in submerged arc deep penetration fillet weld

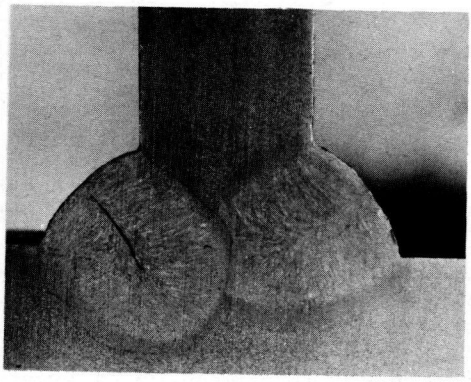

crack in pear-shaped single-pass submerged arc weld deposit

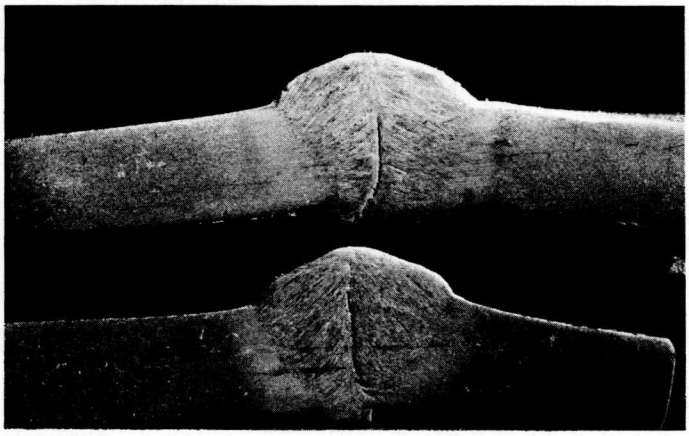

cracks in single-pass square groove welds

crack in inadequate throat of fillet weld

Figure 31. Cracks.

Longitudinal cracks may also occur as an extension of a crater crack; therefore, all weld passes should be completed in such a manner that a deep crater is not left.

When a long continuous pass is made rapidly in a groove weld in thick material and the joint is subjected to severe transverse restraint, this restraint together with the inherent longitudinal restraint can cause transverse cracking as well as longitudinal cracking in the weld. Transverse cracks may extend into the parent plate, particularly if the heat-affected zone has hardened considerably during welding. Hardness and brittleness of the heat-affected zone are factors of prime importance in the problem of cracking, particularly in the case of high-tensile steels. They are more fully discussed in the last part of this section.

Transverse cracks are sometimes hot cracks and may result from hot shortness caused by sulfur, although the sulfur content of most commercial mild steels does not normally affect the weldability of the material. Weld metal cracking may be encountered if excess sulfur is present in the parent plate or electrode core wire. Where suspected, this may be conveniently revealed by taking sulfur prints. Although sulfur and high carbon are probably the elements most commonly objectionable in mild steel from the point of view of good weldability, other elements may occur as impurities and may lead to cracking if excessive amounts are present. Nickel may lead to such cracking if a proper balance of other elements, such as carbon, is not provided.

In automatic welding where the crater produced is of considerable size, extension plates may have to be arranged at the ends of butt welds so that the starting and finishing of the weld passes are clear of the joint. The starting and finishing plates should be the same thickness as the joint material. The minimum dimensions of starting plates should be 6 in. wide by 6 in. long in the direction of the seam. For finishing plates, the corresponding minimum dimensions should be 6 and 9 in. respectively.

The effect of submerged arc and similar welding processes is to open up the joint ahead of the arc. Therefore, the finishing plate must be butt welded to the work pieces at the end of the joint for their full width and thickness to prevent the joint from opening in this manner. Experience has shown that, unless these welds are fully effective, cracking is likely to occur in the joint being welded.

Base Metal Cracking—Although base metal cracking may occur under certain conditions in thick sections of mild steel, it is more particularly associated with high-tensile steels, that is, medium-carbon, low-alloy, and high-alloy steels. Base metal cracks in high-tensile steels are normally situated within the heat-affected and hardened zone of the material and are attributable to the effects of the composition of the base metal, the associated cooling rate after welding, the degree of restraint, and hydrogen. A number of factors influence the cooling rate; these include the thickness of the base metal, the rate of heat input during welding, preheat, and interpass temperature.

The hardenability of the various high-tensile steels differs considerably according to the composition of the material. The following remarks, although holding good to a certain extent for most high-tensile steels, are primarily intended to apply to low-alloy structural steels. They should also be considered, however, in dealing with thick sections of mild steel.

Hardening of the heat-affected zone results from the rapid cooling of the metal after deposition of the weld metal. This hardness increases with the thickness of the plate because of the quicker dissipation of heat and consequently faster cooling. Therefore, the danger of cracking increases with plate thickness, particularly in joints that are highly restrained. The rate of cooling should be retarded sufficiently to avoid formation of an excessively brittle zone and to reduce the rate at which shrinkage stresses are developed.

Hydrogen will usually cause transverse cracks in 110,000 psi tensile weld metal. Use of higher preheat and low-hydrogen filler materials will prevent transverse cracking, unless proper preheat has been employed.

Reduction of the cooling rate can be achieved either by preheating, by immediate post-heating, or by increasing the rate of heat input per unit of weld by means of a suitable procedure. Preheating is usually more convenient than post-heating, and at least as equally as effective. A suitable welding procedure involves the deposition of large weld passes by the use of relatively large electrodes or by vertical upward welding.

Under critical circumstances, multiple pass welds should be so deposited that the heat is maintained in the surrounding plate, with succeeding passes made as soon as possible after the first run. The build-up sequences used to accomplish this are known as cascade and block welding.

In the welding of steels likely to harden, the use of small tack welds must be avoided, especially when preheating cannot be applied. Similarly the striking of arcs on the base metal outside a weld groove or area should be carefully avoided, as local hard spots may result and give rise to the formation of small surface cracks.

Requirements for preheat, interpass temperature, and the use of low-hydrogen electrodes should be applied with good judgment. For example, even though structural carbon steel material of 1-in. thickness is not required to be preheated or welded with low-hydrogen electrodes, one is advised to warm the base metal at least somewhat at the point where welding is to be started when the base metal temperature is near the allowable minimum of 10 F, and perhaps to observe other precautions with respect to welding procedures. For plates more than 1 in. and up to 2 in. thick, 200 F preheat is specified when ordinary electrodes are used, that is, electrodes without low-hydrogen coatings. Obviously, the full 200 F preheat would not be as important when welding $1\frac{1}{16}$-in. plate under little restraint as when welding 2-in. plate at a joint subjected to severe restraint, although the nominal specification requirements are the same for both cases (6, Table 2).

Effect on Strength

The strength of a welded joint, under any conditions of loading, will be seriously reduced by the presence of cracks in a weld, and under no circumstances should such defects be permitted.

Sometimes a minor member or element that does not carry much stress or major responsibility may be welded continuously to a main member, for example, a steel curb or handrail base that is welded to a steel deck plate, which in turn is welded to the top flange of a girder. In such cases, serious defects should be tolerated no more in the minor part or attachment than in the main member. A fracture starting in such a minor attachment can propagate into the main member.

Correction

Weld metal or base metal cracks can only be rectified by removing the defective parts and rewelding. Precautions should be taken to ensure that the cracked portions are removed completely. The removal should extend well beyond the visible extremities of the cracks, and the surrounding surfaces should be properly cleaned and examined before rewelding. A modified welding procedure may be necessary to prevent recurrence of cracking.

INCORRECT WELD SIZE AND PROFILE

Description

Although incorrect weld size is usually thought of as pertaining to undersized welds or to welds of variable size, excessive sizes of fillet welds may be objectionable in some cases, for example, where they may cause distortion. The defects associated with incorrect profile in fillet welds are excessive convexity or concavity, irregularity of the weld face, and unequal leg lengths. Excessive concavity usually is not objectionalbe unless it results in deficient throat dimension. In butt welds, incorrect profile refers to lack of reinforcement, excessive reinforcement, or irregularity of the weld deposit. Lack of reinforcement is a condition in which the weld face lies below the surface of the base metal, and excessive reinforcement is a condition in which weld metal is deposited substantially in excess of the surface convexity required to ensure full throat thickness. Figure 32 shows incorrect weld size and profile for single-V groove welds and fillet welds.

Cause and Prevention

Welds of incorrect size or unsatisfactory profile generally arise from use of a faulty welding procedure and technique or lack of understanding on the part of the welder of the requirements of the plans and specifications.

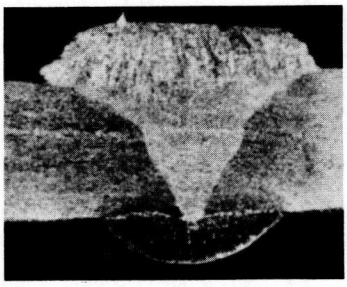

single-V groove weld with excessive reinforcement

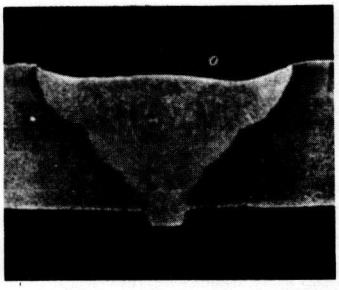

single-V groove weld with insufficient buildup

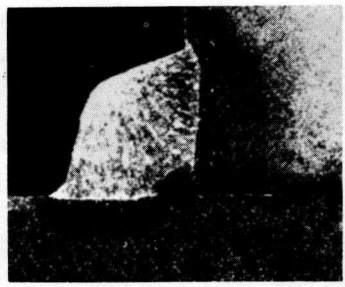

fillet weld with excessive convexity and lack of penetration

fillet weld with excessive concavity and lack of penetration

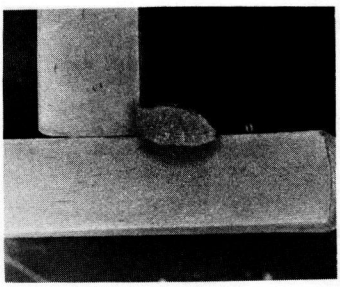

fillet weld with insufficient leg

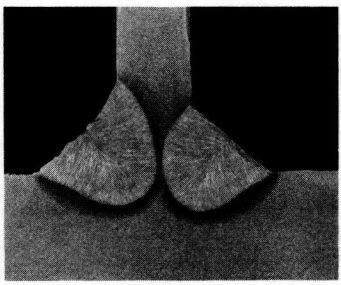

fillet welds with unequal legs

Figure 32. Incorrect weld size and profile.

Excessive convexity or concavity of the weld face may be caused, at least in part, by the welding characteristics of the electrode. These defects are more generally attributable, however, to the use of incorrect welding current, convexity being associated with low current and concavity with high current. The welding position is also a contributory factor.

Fillet welds of unequal leg lengths are generally caused by faulty manipulation of the electrode or incorrect positioning of the work piece when welding is done in the horizontal position. Normally, it is difficult to deposit large single pass fillet welds of consistently equal leg length in the horizontal position because they tend to sag at the base. Horizontal fillet welds larger than $^5/_{16}$ in. should be deposited in more than one pass. Undersize fillet welds will be produced if the effective leg length is reduced by excessive root gaps because of bad fitting up of the parts.

Excessive reinforcement or lack of reinforcement in butt welds is caused by use of an incorrect welding procedure. It should not occur if the joint preparation, electrode size, welding current, number of passes to be made, welding speed, and length of pass per electrode are suitable.

Effect on Strength

Excessive concavity and unequal leg lengths may reduce the throat thickness of fillet welds and in this way also reduce the ultimate strength of the welded joint.

Excessively convex fillet welds may be of equivalent static strength to standard welds. The welding conditions that tend to produce fillets of this shape, however, may also tend to cause other defects, such as lack of penetration and lack of fusion, that will affect

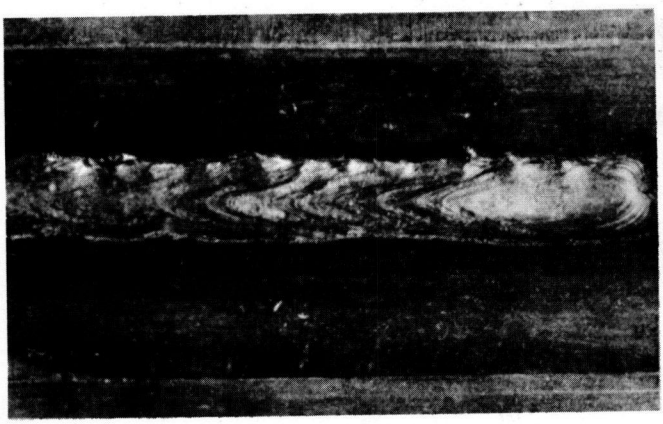

elongated ripples and crater not filled sufficiently

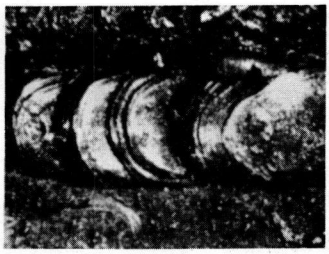

badly shaped ripples

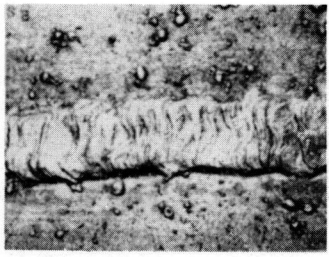

badly shaped ripples

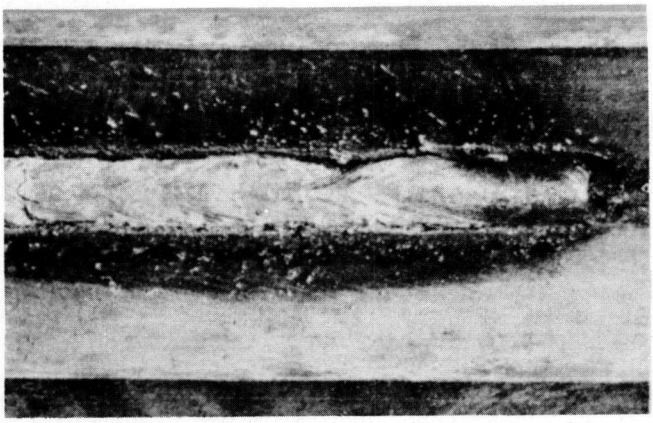

uneven surface, undercut, and crater not filled

surface porosity

Figure 33. Unsatisfactory surface appearance.

the strength of the weld considerably. Excessive convexity may also be associated with overlapping at the toes of a weld. Because of the resulting notch effect and stress concentration, the fatigue strength of a joint will be reduced where these defects are present.

Both lack of reinforcement and excessive reinforcement of butt welds will reduce fatigue strength. Failure to fill the groove completely reduces the static strength of the member.

Correction

Excessive concavity and unequal leg lengths in fillet welds should be rectified by adding weld metal. Excessive convexity is corrected by removing the excess weld metal by chipping and grinding.

Excessive reinforcement in butt welds may be rectified by removing the excess metal. Unfilled grooves can be corrected by adding further weld metal. When these faults are corrected, care should be taken that prior to rewelding the joint is thoroughly de-slagged and is in a clean condition.

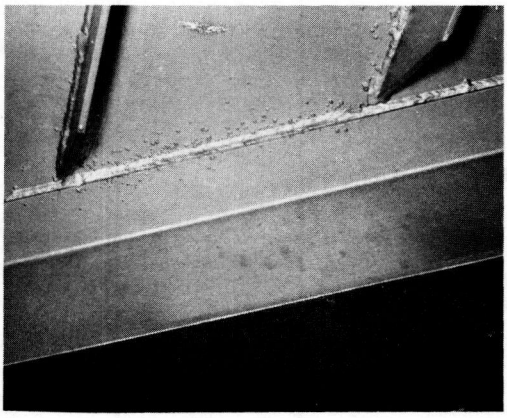

Figure 34. Excessive spatter.

UNSATISFACTORY SURFACE APPEARANCE

Description

Unsatisfactory surface appearance includes a number of faulty conditions distinct from incorrect weld size and profile. Such conditions include excessive surface roughness, surface porosity, visible included slag, unfilled end craters, and faulty junction and fusion at points where welding is interrupted momentarily, for example, by changing electrodes. Various types of unsatisfactory surface appearance are shown in Figure 33.

Cause and Prevention

The formation of a rough or irregular weld surface is caused mainly by the use of incorrect welding procedure and technique, although in certain cases the welding characteristics of the electrode may affect the surface appearance of a weld. In judging the appearance of a weld, one must give due regard to the position in which the weld was made. For example, the surface ripples of a weld made in the vertical position will necessarily be more pronounced than those for a weld made in the flat position or in a horizontal fillet weld.

Accessibility of joints is an important factor. The position of welds in a structure should allow the welder adequate manipulation of the electrode.

Effect on Strength

Under severe fatigue loading conditions, unsatisfactory surface appearances may affect the strength of a joint because they can form local stress raisers and provide sources for initiation of fatigue cracks. In general, however, the static strength of a welded joint will not be adversely affected by surface roughness or by dispersed surface porosity or visible slag.

Correction

Surface roughness, visible included slag, or surface porosity can be rectified by removing the faulty part of the weld deposit and rewelding. The removal of tightly adhering slag (for example, along the toe of a weld) may not require rewelding but only vigorous wire-brushing or light chipping.

EXCESSIVE SPATTER

Description

During the deposition of weld, a spatter of small globular deposits of metal from the electrode may be scattered over the surface of the weld and adjacent parent metal. In some cases, these adhere tightly. The main objection to excessive spatter, as such, is the waste of useful material and the cost of removing the spatter to provide a good appearance and a surface suitable for painting. Excessive spatter, however, may indicate the use of improper procedures or techniques that could cause other, more serious defects. Figure 34 shows an example of excessive spatter and badly shaped weld with paint applied over spatter and spots exposed to corrosion where spatter has dropped off.

Cause and Prevention

Excessive spatter is associated mainly with the use of excessive welding current or too long an arc, although in some cases the welding characteristics of the electrode or

dampness of the electrode covering may contribute to this condition. Frequent interruptions of the arc during welding may also tend to cause more spatter and should be avoided as far as possible.

Effect on Strength

Spatter has no measurable effect on the strength of a welded joint.

Correction

The fault may be rectified by vigorously wire-brushing the spatter deposit from the surface of the plate or by chipping if the spatter tightly adheres.

10
Safety and Protective Equipment

During field welding, particularly, welders, welding operators, and inspectors must work frequently on scaffolding or falsework while their sight is obscured by protective helmets or face shields and their attention is necessarily directed to the actual welding operation. In this precarious position, they must be ever mindful of their personal safety and of the hazards of electrical shock, a major cause of injury from falls.

The inspector should always be safety conscious and should encourage the welders and welding operators to have a similar attitude. The contractor should provide safe and adequate scaffolding, ladders, and falsework wherever necessary. These will also facilitate good workmanship.

All personal protective equipment should conform to the requirements of the applicable codes and specifications. The inspector should require that the contractor enforce the use of approved accessories necessary for the protection and convenience of the welders and welding operators and for the proper and efficient execution of the work. Suitable protection against radiation from the arc must also be maintained by the contractor for persons other than the actual welders, welding operators, and inspectors where arc-welding operations might be viewed within a range harmful to them.

A detailed discussion of safety precautions is not included here because suitable instructions in this regard are readily available elsewhere (12, 13, 14). The importance of following safe practices cannot be overemphasized. Inspectors on welded construction should be provided with comprehensive booklets or publications on safety in welding and cutting. Some of the manufacturers of welding and cutting supplies and equipment have prepared such booklets for distribution. They are usually composed of a quite comprehensive set of rules simply stated, and easily understood by workmen, and usually based on standard provisions for safety as found in recognized codes or standards.

11
Nondestructive Testing

The methods of nondestructive testing applicable to welded highway bridges are radiographic, ultrasonic, magnetic particle, and dye penetrant. Knowledge of the principles and procedures of these methods is essential to ensure that the operators are satisfactorily performing and that test results are correctly interpreted. The information in this chapter provides the inspector with the rudiments of these methods as applied to welded bridge inspection. Further details may be found in the American Welding Society's publications (2) or in other publications on nondestructive testing.

RADIOGRAPHIC INSPECTION

Principles

In radiographic inspection, X-rays or gamma rays are applied with sufficient intensity to penetrate the weld joint under test. Any discontinuity in the joint or variation in thickness of the joint will modify the intensity of the radiation reaching a sensitive film placed on the opposite side of the joint. The pattern of variation in degree of darkening of the film is then interpreted to determine the quality of the weld joint. The exposed and developed film, called a radiograph, becomes a permanent record of the condition of the joint.

Although radiographic inspection will reveal surface discontinuities, the method is primarily used for detection of internal weld defects such as cracks, porosity, slag inclusions, incomplete fusion, and inadequate joint penetration. The detection of a defect depends on its dimension with respect to the direction of radiation. If a thin flat defect is oriented such that the radiation passes through only its smallest dimension, it may be recorded on the radiograph only if this dimension is at least a small percentage of the total thickness of the weld joint.

The most common source of X-rays for industrial radiography is the X-ray tube. This tube consists of an evacuated glass bulb in which is mounted a copper-backed tungsten anode and a tungsten filament cathode. When the cathode, or filament, is heated, it gives off electrons that are accelerated to a high velocity by means of a high voltage. When these electrons strike the anode, or target, X-rays are emitted. The X-rays radiate from the target in all directions, but, because the tube is shielded, the only useful rays are those that radiate through a window in the shield.

Controls over the power source for the X-ray tube are provided so that the desired intensity, penetrating power, and duration of radiation exposure can be obtained. The intensity, or quantity, of radiation depends largely on the current passing through the tube, usually expressed in milliamperes. The penetrating power, or velocity, of the radiation depends on the voltage and wave form applied to the tube. The duration of the exposure is usually controlled by an electric timer.

In industrial uses, the voltage may vary from 50,000 volts to 2 million volts for thicknesses of steel up to 8 in. Beyond that, sources such as the very-high-voltage betatron of from 20 to 30 million electron volts can be used.

Gamma rays for industrial radiography were originally obtained from radium. Today the most common source of gamma rays is a group of artificially generated isotopes that includes cobalt 60, iridium 192, and cesium 137. The energy of these sources compared with that of X-ray reveals that the highest source is cobalt 60, about equivalent to a 2-million-volt X-ray beam, and the lowest is cesium 137, about equivalent to a 250,000-volt beam.

The radiation energy of the isotope sources cannot be controlled like that of X-rays. Each isotope gives off its characteristic radiation at all times. Only the length of exposure time can be varied to suit the thickness of material.

Equipment

The source of radiation best suited for the radiographic inspection of a welded joint in a bridge structure will depend on the thickness of the steel used, and whether the radiographs are to be taken in the shop or in the field.

Equipment for X-rays can be divided into 3 groups based on degree of portability. The most portable are the relatively small tank units, which can be transported by hand and which are suitable for X-raying steel up to 2 in. in thickness. In the second group are the floor units, which are equipped with a wheeled base for movement to any part of a fabricating shop. The tube is usually mounted on some type of boom with swivel joints for maximum maneuverability. These units can be used for steel thicknesses up to 4 in. In the third group is the very-high-voltage equipment that is mounted in a fixed location within the shop and surrounded by a thick-walled concrete enclosure for the protection of personnel. When these installations are used, the pieces to be X-rayed are brought to the unit.

The only equipment required for gamma ray sources is for storage and for placing into position at the weld. The isotopes, which may be in pellet or powder form depending on the material, are enclosed in capsules for protection and ease in handling. The capsules are stored in lead boxes when not in use.

For the low-intensity sources, only a rod or string is needed for removing the capsule from its box and placing it in position at the weld. The usual handling rods allow the operator to keep about 5 ft away from the capsule. The high-intensity sources must be handled by remote control equipment. This may consist of a crank-operated, flexible-cable arrangement by which the capsule can be projected from the storage container into exposure position at the weld.

A recent development is the combination storage and projection device, available in several sizes for isotopes of various intensities. This is a lead-lined enclosure that has a means for changing the location of the isotope within the enclosure from a storage position to a position from which the rays are emitted through an opening to the outside.

For both the X-rays and gamma rays, special film holders are used that have lead foil screens in contact with the film. These screens improve radiographic quality by protecting the film from scattered radiation and by furnishing an intensifying action that reduces exposure time.

In the selection of radiographic equipment, the question often arises as to what the relative advantages and disadvantages of X-ray and gamma ray sources are. The answer to this question depends on the application under consideration. In general, the principal advantages of X-rays are that (a) sensitivity is generally greater, (b) energy can be adjusted for use on a variety of thicknesses of material, (c) radiation can be turned off when not in use, and (d) exposure time is much shorter. The principal advantages of gamma rays are that (a) equipment is more portable, smaller, and easier to position, (b) no electrical power supply or cooling equipment is needed, and (c) first cost is relatively low.

Procedures

Radiographic inspection is accomplished by placing the film, contained in a suitable holder, on one side of a weld joint and then directing a source of radiation toward the film from the opposite side of the joint. One side of the joint should be accessible to a degree that the film holder can be placed as closely as possible against the joint and not more than 1 in. away. On the opposite side there must be enough clearance for positioning the X-ray or gamma ray source. The radiating beam must be aimed accurately at the film through the joint. Distance from the joint will vary. Image sharpness is improved by limiting d/t to 20 in. minimum.

After the film holder has been positioned, the penetrameter, lead identification numbers, and position locator are placed on the joint at the side opposite the film. If X-ray

equipment is used, the next step is to adjust the controls to the settings determined for the thickness of the particular joint under inspection. The equipment is then turned on and continues in operation until shut off automatically by the timer. If gamma ray equipment is used, the isotope capsule is placed in an exposure position, held there for the required length of time depending on the thickness of the joint, and then returned to storage position. As the final step in the procedure, the film holder is removed and sent to the darkroom for processing of the film.

Interpretation of Radiographs

A very important consideration in the interpretation of a radiograph is the procedure or technique used in its preparation. The AWS Bridge Specifications (6) require that all radiographs shall determine quantitatively the size of defects having thickness equal to or greater than 2 percent of the thickness of the thinner of the parts joined by the weld under examination.

The usual method for checking procedures is by use of a penetrameter or thickness gage. The penetrameter as specified by AWS is a thin plaque of metal containing 3 drilled holes of diameters equal to 2T, 3T, and 4T, where T is the penetrameter thickness. Two sizes of penetrameters are specified, 1½ in. by ½ in. for joint thicknesses 2½ in. or less and 2¼ in. by 1 in. for joint thicknesses over 2½ in. The thickness for each size should not be more than 2 percent of the thickness of the plate being radiographed. The material of the penetrameter should be substantially the same as that of the plate being radiographed.

AWS specifies that only 1 penetrameter need be used for radiographs on film less than 10 in. in length, but that at least 2 penetrameters shall be used with film 10 in. or more in length. When 2 are used, they are placed at opposite ends of the exposed length of film, parallel and adjacent to the weld seam. When the weld reinforcement or the backing strip, if one is used, has not been removed, a shim of the same material as the backing strip should be placed under the penetrameter such that the total thickness being radiographed through the penetrameters is the same as the total thickness through the weld, including reinforcement and backing strip.

The technique used in preparing the radiograph is considered to be satisfactory if the smallest hole of the penetrameter is visible on the finished negative.

The density or darkening of the negative is another check on technique. Improper exposure or development can result in negatives that are either very dark or very light and beyond the limits of good readability. As measured on a densitometer, the limits of density for good readability are a low of about 1.5 and a high of about 2.5. In connection with this, it is important to know whether the negatives were made with X-ray or gamma ray equipment. Greater sensitivity is obtained with X-rays and defects show up more sharply.

Before attempting to interpret a radiograph of a welded joint, the engineer should obtain information on the design of the joint, the thickness of the joint members, the welding procedure, and the location of the radiation source and film with respect to the joint. With this information, he can recognize the weld and other parts of the joint area by the variations in density. Defects will show as dark areas as compared with the normal density of the sound metal. Weld reinforcements, backing strips, and spatter, which add to the normal thickness of the weld, will show as lighter areas on the negative.

Defects, such as porosity, slag inclusions, and incomplete penetration, and cracks that have depth perpendicular to the plate surface usually produce images that are fairly obvious. Cracks that run at angles to, or parallel to, the plate surface may show up faintly or not at all. This is the reason that radiographs should be carefully examined under proper viewing conditions.

The American Welding Society has published reproductions of negatives containing images of typical weld defects (2). This publication also contains useful information on the interpretation of radiographs.

MAGNETIC PARTICLE INSPECTION

Principles

In this method of inspection, a magnetic field is set up in the weld under test. If the weld section is uniform, the magnetic field will also be uniform. If there is a sharp change in the section, such as that caused by a defect, local magnetic poles will be formed and a leakage flux will flow across the change in the section or defect. If finely divided magnetic particles are applied to the surface, the particles near the defect will be attracted by the local poles and will build up across the defect. When the surplus particles are removed from the area, the remaining particles will show the pattern of the defect. The maximum pattern is obtained when the path of the flux is normal to the lengthwise dimension of the defect. Subsurface defects, if not too deep, will also cause leakage flux, but the magnetic field will be broader and weaker.

The magnetic field can be set up by several methods. Two of these methods, prod magnetization and yoke magnetization, can be conveniently used on large weldments such as girders or bridge structures.

Prod magnetization is accomplished by passing electric current through the weld area to be examined. The name is derived from the fact that the current is applied to the area by means of electrodes or prods attached to the ends of cables from the power source. As the current flows through the prods and through the weld between the prods, it produces a circular magnetic field around each prod. Because the lines of force around each prod are in opposite directions, they combine to form a magnetic field with a direction normal to a line between the prods.

Three types of electric current are used for prod magnetization. Alternating current is very effective for surface defects but will not penetrate for the detection of subsurface defects. Direct current will detect both surface and subsurface defects. Half-wave rectified alternating current is the most effective for the detection of surface and subsurface defects when the inspection is made with dry magnetic particles. This type of current causes the particles to pulsate, which aids in the formation of defect patterns. An experienced operator can detect defects at a depth in the order of $^3/_8$ in.

Yoke magnetization is accomplished by making the area under test a part of a magnetic circuit. The yoke, which may be either an electromagnet or a permanent magnet, is placed so as to straddle the weld causing the magnetic lines of force to pass through the weld in a direction normal to the longitudinal axis.

Equipment

The magnetic particle inspection method requires 2 main items of equipment: a source of magnetizing current or flux, and a means for applying and removing the magnetic particles.

For field inspection of bridge structures, the equipment must necessarily be readily portable. One of the most compact units available is a hand-held electromagnet yoke kit. This is a C-shaped yoke of soft magnetic material around which is wound a coil carrying the magnetizing current. It operates on 110 volts ac or on a 12-volt automotive battery. In use, the yoke is placed so that it straddles the weld under test. It is primarily intended for detection of surface cracks.

For prod magnetization, a number of units of various capacities and sizes up to 3,000 amp are available. For the inspection of heavy weldments, such as bridge components, a unit that will supply 600 to 800 amp at a prod spacing of 6 to 8 in. is recommended. Where the test area may be some distance from the magnetizing power source, as in field inspection, allowance must be made for the drop in output due to the length of the leads. A heavy-duty unit with a nominal rating of 3,000 amp may have an output at the prods of only 800 amp if the leads are about 100 ft in length.

The best method for applying the magnetic particle powder is by means of a specially designed mechanical powder blower. The powder is applied to the test area by air pressure through a hand-operated gun. When sufficient powder has been released, the operation of the trigger will shut off the powder but allow the flow of a light stream of air for removing the excess powder.

Procedure

The magnetic particle inspection procedure consists of 4 operations: (a) preparing the area to be inspected, (b) setting up the magnetic field, (c) applying the magnetic particles, and (d) removing the excess particles and interpreting the remaining pattern.

The surface of a weld to be inspected should be cleaned of any dirt, grease, oil, or water. In addition, it is sometimes necessary to grind smooth any sharp crevices or overlaps on the weld surface where the powder might collect mechanically and interfere with the magnetic pattern.

For prod magnetization, the 2 prods are placed about 6 to 8 in. apart along the longitudinal axis of the weld seam, either directly on the seam or adjacent to it. The current is prevented from arcing at the point of contact by being turned on and off by means of a switch while the prods are held firmly in place. For welds of less than 6 in. in length, it may be necessary to reduce the current to avoid too heavy an accumulation of powder because of the close spacing of the prods. The magnetic particles are applied to the weld while the current is flowing. The particles are not forcibly applied but are allowed to float down to the weld surface so that they are free to be influenced by the magnetic leakage fields and form patterns. While the current is still flowing, the excess powder around the pattern is removed by a light stream of air from a blower, bulb, or air hose. This must be done very carefully if the pattern indicates the possibility of a defect below the surface.

The prods are normally located on the longitudinal axis of the weld because it is in this direction that most defects occur. If transverse defects are suspected, the prods are placed at 90 deg to the longitudinal axis and the procedure is repeated.

This inspection method is commonly performed by a 2-man team: An experienced operator holds one prod, applies the powder, and interprets the pattern while a helper holds the second prod. A permanent magnet leech may be used to hold one prod, making this a 1-man operation.

With the yoke method of magnetization, the axis of the yoke is placed at 90 deg to the longitudinal axis of the weld. This allows the magnetic field to pass around the yoke and across the weld in a complete circuit. The application and removal of the powder are the same as those with the prod method.

It is often desirable to make a record of defect patterns for future reference. The simplest record is a sketch of the area showing the location and extent of the pattern. Others are photographs or the powder pattern itself lifted and transferred to a record sheet by the use of transparent adhesive tape.

Interpretation

The correct interpretation of defect indications is very important whether magnetic particle inspection or some other method of nondestructive testing is used. Magnetic particle indications are generally grouped into 3 classes: surface defects, subsurface defects, and nonrelevant magnetic conditions.

Surface defects produce sharp, distinct patterns that are held tightly to the surface of the weld by the magnetic flux. Defects that can be detected at the surface include cracks, incomplete fusion, and undercut. Subsurface defects produce broad (depending on depth), fuzzy indications that are generally easier to remove under the action of the air stream. Subsurface defects that can be detected include cracks, slag inclusions, incomplete fusion, and inadequate joint penetration.

In fillet welds, the normal plate separation at the root will frequently show as a broad indication for the full length of the weld. In a T-joint, however, when the design calls for 100 percent penetration, any such indication would be classed as a defect. Because this broad indication may mask any sharp surface indications, the inspector is advised to reinspect the weld with alternating current to check for surface defects.

Two types of nonrelevant indications are occasionally found on weldments. One is a rather broad indication that builds up along the edge of the weld bead. This indication is caused by a change in permeability in the zone that is affected by the heat of welding. The other indication is caused by the collecting of the powder in rough grooves or by other irregularities on the surface of the weld bead.

DYE PENETRANT INSPECTION

Principles

Dye penetrant inspection is a relatively simple process. First, a colored liquid penetrant is applied to the surfaces of a part. It is permitted to remain on the part for a period of time, during which it penetrates into any defects that are open at the surface. After the penetrating period, the excess penetrant that remains on the surface is removed. Then the developer, a light-colored, powdered absorbent material, is applied to the surface. This material acts as a blotter and draws out a portion of the penetrant that had previously seeped into the defect. As the penetrant is drawn out, it diffuses into the coating of developer, forming a colored indication against the light background of the developer.

This process was originally developed for the inspection of nonmagnetic materials, such as aluminum, as a parallel to the magnetic particle process for surface inspection.

Equipment

The equipment for dye-penetrant inspection is relatively simple and inexpensive. All that is needed is a set of the inspection solutions and a supply of wiping cloths.

The inspection kits offered commercially contain the cleaner, penetrant, and developer solutions, all in pressure spray cans and packed in a toolbox-type carrying container. The penetrant has a bright red color and the developer is white, providing a good contrast.

Procedure

When this process is used, the preparation of the area to be inspected is very important. All surfaces must be cleaned of dirt, rust, scale, grease, oil, paint, and welding flux and spatter. If cleaning is inadequate, the penetrant cannot enter the defect openings on the surface or the poor surface condition may cause false indications to appear.

After the surface is cleaned, the penetrant is sprayed on and allowed to remain for a penetration time of at least 20 min. Any penetrant remaining on the surface is then removed and the developer is applied. Large defects or openings will show up immediately, finer defects after a short time. Other things being equal, the time for an indication to develop is inversely proportional to the volume of the discontinuity.

Interpretation

The interpretation of the results from the use of this method requires relatively little experience or training. Surface defects that can be readily detected in welds are cracks, lack of fusion, and porosity.

Cracks and lack of fusion usually show up as a continuous line of penetration indication. The width and brightness of color depend on the volume of the crack. A crack that does not reach the surface for its entire length may produce an intermittent line indication. Porosity at the weld surface will show up as small red dots. Where weak indications are obtained, the area should be cleaned and the procedure repeated to eliminate the possibility of faulty technique.

One good way to estimate the depth of a defect is by the persistence of the indication. If it reappears after the developer has been removed and reapplied, there must be a reservoir of penetrant present, indicating a deep defect.

ULTRASONIC INSPECTION

Principles

In ultrasonic inspection, a beam of acoustic energy at ultrasonic frequencies is directed into the specimen under test, and any energy reflected from discontinuities within the specimen is indicated by suitable instrumentation. This ultrasonic beam travels with little loss through homogeneous material but is intercepted and reflected

by discontinuities within a material similar to the way in which light is reflected from a smooth surface.

The ultrasonic beam is applied to the material under inspection through a transducer connected to an electrical generating circuit. The transducer consists of a small piezoelectric element enclosed in a protective case. The piezoelectric element, or crystal, converts electrical energy into mechanical energy and vice versa. A couplant, such as glycerine or oil, is used to transfer the mechanical energy from the transducer to the surface of the material. The beam is sent in intermittent pulses such that the transducer has time to receive all or any part of the beam energy reflected from a discontinuity in the material. The reflected mechanical energy, converted to electrical energy at the transducer, is passed through an amplifier and produces a vertical trace on the screen of a cathode ray tube.

When the face of the piezoelectric element is parallel with the surface of the material being tested, the technique is called straight-beam testing. When the face of the element is at an angle to the surface of the material, the technique is called angle-beam testing or shear-wave testing.

In angle-beam testing, the ultrasonic beam passes into the material at an angle and is divided into a longitudinal wave and a shear wave, each traveling at a different refraction angle. For the inspection of butt welds in plate, the angle of incidence of the entering beam can be set so that the shear wave will travel in a direction generally parallel to the surface of the plate but will, at the same time, be reflected back and forth between the plate surfaces. This beam will be reflected back to the transducer along the same path if it is intercepted by defects in the weld. The amount of energy reflected will depend on the orientation of the reflecting areas of the defect with the direction of the beam.

Most ultrasonic test instruments can be calibrated so that the height of the indication on the cathode-ray tube is a measure of the reflected energy and the horizontal position of the indication is a measure of the distance traveled by the reflected energy. From the horizontal position of the indication, the location of a defect within the weld can be accurately determined.

Equipment

Portable, ultrasonic, flaw-detecting instruments of convenient size and weight are available for bridge inspection. These units can be hand carried and will operate from line voltage or from a self-contained battery, and thus are suitable for either shop or field use.

For ultrasonic testing in accordance with the AWS Bridge Specifications, the equipment must have, in addition to the normal controls for sensitivity and horizontal displacement, a gain control calibrated in discrete steps of one or two decibels.

Transducers are available in a variety of sizes, but for angle-beam testing of bridge welds the widths and heights are generally between $^3/_8$-in. minimum and 1-in. maximum. Transducer angles of 70, 60, and 45 deg are generally specified for butt-weld testing.

Calibration blocks are an essential part of the equipment for ultrasonic testing. The generally accepted standard is the block approved by the International Institute of Welding. Calibration blocks of other designs are available and may be used if permitted by the applicable specifications.

Procedure

The detailed ultrasonic testing procedure for welds in highway bridges is usually prescribed by the applicable specifications. A typical procedure is included in the AWS Bridge Specifications. The procedure involves the calibration of the equipment so that sensitivity is at a specified level and beam travel is suitable for the thickness of welded plate to be inspected. The calibration is usually required before testing starts and at frequent intervals during testing.

Prior to the inspection of a weld with an angle-beam transducer, the plate adjacent to the weld through which the beam will pass must be examined for any lamellar discontinuities that could interfere with the beam travel. This testing is done with a

straight-beam transducer. A first step in the testing is cleaning dirt, loose scale, and weld spatter from the area to be traversed with the transducer. A couplant of the type prescribed in the specification is then applied to the area. The transducer is placed against the plate and moved over the prepared area while the cathode-ray-tube screen is observed for indications of defects. The plate is inspected for lamellar discontinuities by the transducer being moved directly over the area to be inspected. For angle-beam inspection of welds, the transducer is moved in a zig-zag pattern along an area adjacent and parallel to the weld.

Interpretation

When the ultrasonic inspection of structural welds is done in accordance with the AWS Bridge Specifications or any other specification that requires a sensitivity level or decibel rating for defect indications, the interpretation of the indication as to type of defect is not necessary for rejection or acceptance. However, knowledge of the type of defect can be very useful to shop personnel, and the experienced operator in ultrasonic testing can usually supply this information.

Bibliography

1. Construction Inspection of Welded Steel Bridges. Texas Highway Department, Austin, 1956.
2. Welding Inspection, 2nd Ed. American Welding Society, New York, 1968.
3. Welding Handbook, 6th Ed. American Welding Society, New York, 5 vols., 1969.
4. Procedure Handbook, 11th Ed. Lincoln Electric Co., Cleveland, 1957.
5. Welding Manual. U.S. Bureau of Reclamation, 1953.
6. Specifications for Welded Highway and Railway Bridges. American Welding Society, D2.0, 1969.
7. Filler Metal Specifications for Mild Steel Covered Arc-Welding Electrodes. American Welding Society, New York, A5.1, 1969.
8. Filler Metal Specifications for Bare Mild Steel Electrodes and Fluxes for Submerged Arc Welding. American Welding Society, New York, A5.17, 1969.
9. Filler Metal Specifications for Mild Steel Electrodes for Gas Metal-Arc Welding. American Welding Society, New York, A5.18, 1969.
10. Filler Metal Specifications for Mild Steel Electrodes for Flux-Cored Arc Welding. American Welding Society, New York, A5.20, 1969.
11. Filler Metal Specifications for Low-Alloy Steel Covered Arc-Welding Electrodes. American Welding Society, New York, A5.5, 1969.
12. Safety in Welding and Cutting. American Welding Society, New York, USA Standard Z49.1, 1967.
13. Recommended Safe Practices for Gas-Shielded Arc Welding. American Welding Society, New York, A6.1, 1966.
14. Safe Practices for Installation and Operation of Oxyacetylene Welding and Cutting Equipment. International Acetylene Association.
15. Terms and Definitions. American Welding Society, New York, A3.0, 1969.

Glossary

The following definitions are in accord with those of the American Welding Society (15) except those for the terms followed by an asterisk. Standard welding symbols are shown in Figure 35, and the use of these symbols on structural drawings is shown in Figure 36.

A

air carbon-arc gouging.* An application of air carbon-arc cutting wherein a groove or a grooved chamfer or bevel is formed when metal is melted by the heat or an arc between a carbon electrode and the work while an air stream is used to remove the molten metal and otherwise facilitate control of the operation—used sometimes for removing weld defects and for back-gouging the root of a groove weld after one side of the groove has been welded, preparatory to welding the other side. Also called arc-air gouging.

arc cutting. A cutting process wherein the severing or removal of metals is effected by melting with the heat of an arc between an electrode and the base metal.

arc welding. A welding process wherein coalescence is produced by heating with an arc or arcs with or without the application of pressure and with or without the use of filler metal.

arc-welding lead. See electrode lead.

automatic welding. Welding with equipment that performs the entire welding operation without constant observation and adjustment of the controls by an operator and that may or may not perform the loading and unloading of the work. Also called machine welding.

B

backing. Material (as metal, weld metal, asbestos, carbon, granular flux, gas) backing up the joint during welding to facilitate obtaining a sound weld at the root.

backing filler material. Filler metal in the form of a ring, strip, or consumable insert fused in a single welded joint.

backing strip. Backing in the form of a strip.

backing weld. Backing in the form of a weld.

backstep sequence. A longitudinal sequence wherein the weld bead increments are deposited in the direction opposite to the progress of welding the joint.

bare electrode. A filler metal electrode, used in arc welding, consisting of a metal wire with no coating other than that incidental to the drawing of the wire.

base metal. The metal to be welded, soldered, or cut.

bead weld. See surfacing weld.

block sequence. A combined longitudinal and build-up sequence for a continuous multiple pass weld wherein separated lengths are completely or partially built up in cross section before intervening lengths are deposited.

build-up sequence. The order in which the weld beads of a multiple pass weld are deposited with respect to the cross section of the joint.

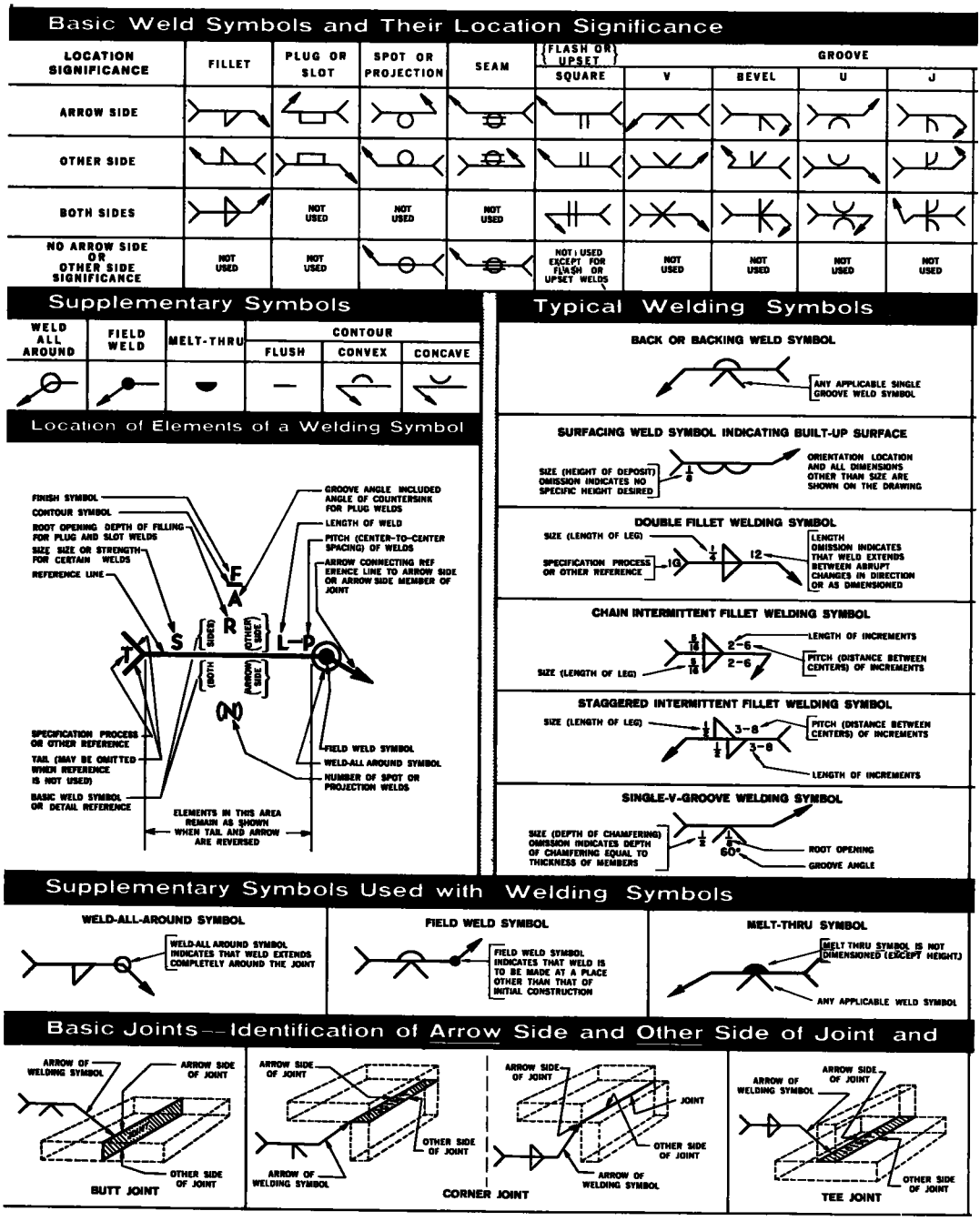

Figure 35. Standard welding symbols.

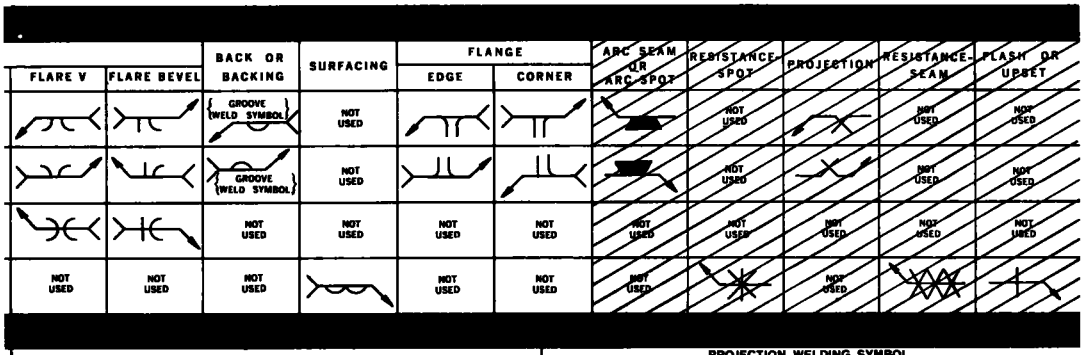

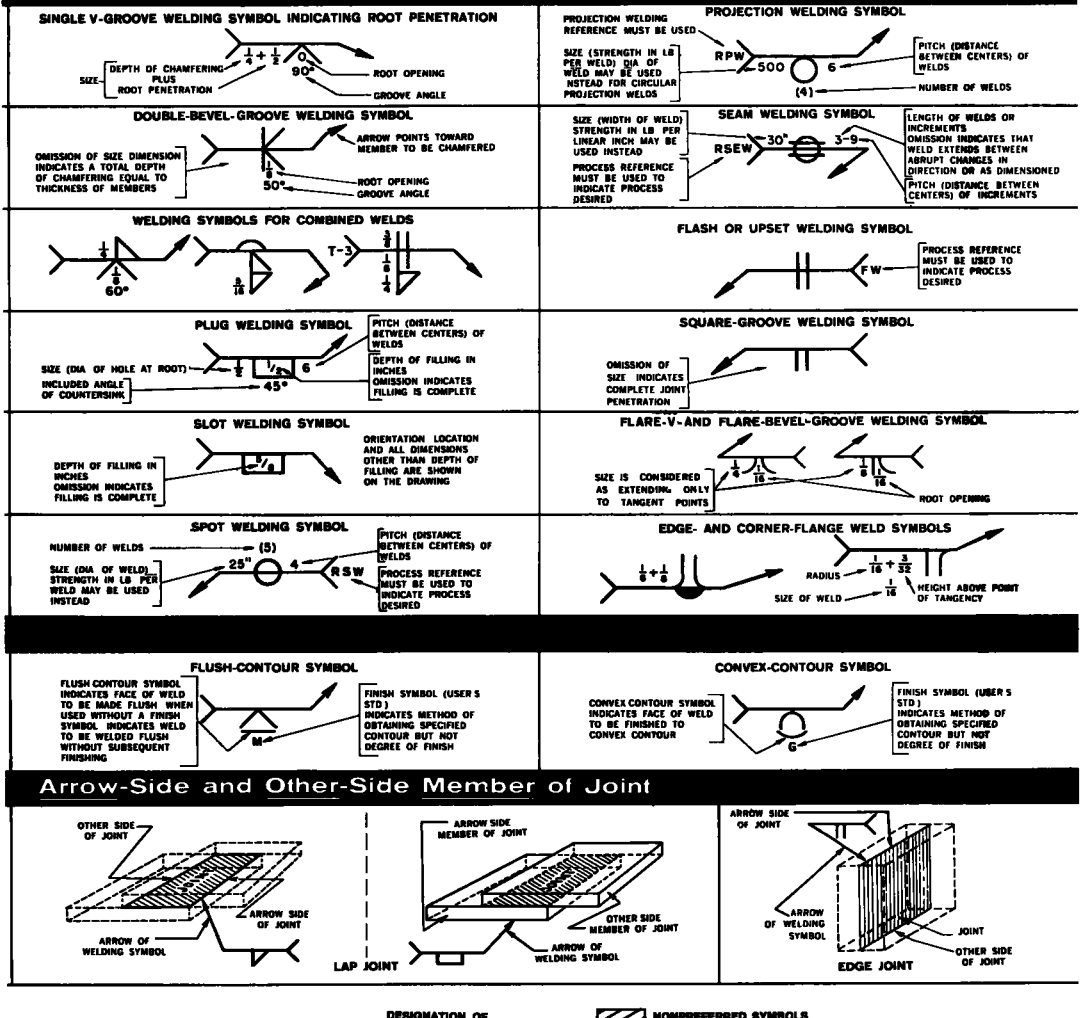

DESIGNATION OF CUTTING PROCESSES BY LETTERS

AAC	Air Carbon Arc Cutting
AC	Arc Cutting
AOC	Oxygen Arc Cutting
CAC	Carbon Arc Cutting
FOC	Chemical Flux Cutting
MAC	Metal Arc Cutting
OC	Oxygen Cutting
PAC	Plasma Arc Cutting
POC	Metal Powder Cutting

NONPREFERRED SYMBOLS

USE PREFERRED SYMBOL WITH PROCESS REFERENCE IN THE TAIL

Copyright 1968 by the
AMERICAN WELDING SOCIETY
345 East 47th Street New York N Y 10017

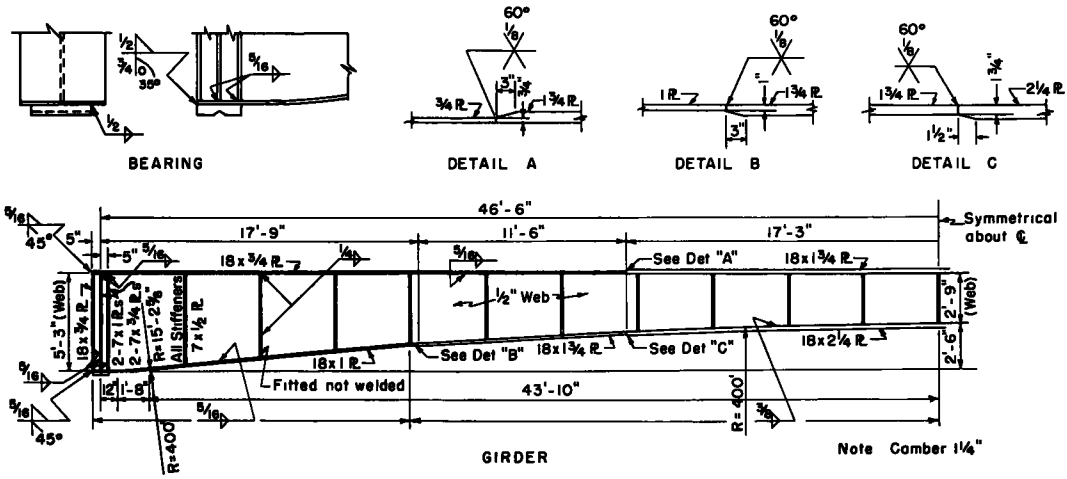

Figure 36 Use of welding symbols on structural drawing.

butt joint. A joint between 2 members lying approximately in the same plane.

butt weld. A weld in a butt joint.

C

cascade sequence. A combined longitudinal and build-up sequence wherein weld beads are deposited in overlapping layers.

chain intermittent-fillet welding. Two lines of intermittent-fillet welding on a joint wherein the fillet weld increments in one line are approximately opposite to those in the other line.

concave fillet weld. A fillet weld having a concave face.

consumable guide electroslag welding. A method of electroslag welding wherein filler metal is supplied by an electrode and its guiding member.

continuous weld.* A weld that extends without interruption for its entire length.

convex fillet weld. A fillet weld having a convex face.

covered electrode. A filler metal electrode, used in arc welding, consisting of a metal core wire with a relatively thick covering that provides the molten metal protection from the atmosphere, improves the properties of the weld metal, and stabilizes the arc.

crater. An arc-welding depression at the termination of a weld bead or in the weld pool beneath the electrode.

D

depth of fusion. The distance that fusion extends into the base metal or previous pass from the surface melted during welding.

E

effective length of weld. The length of weld throughout which the correctly proportioned cross section exists—in a curved weld, measured along the centerline of the throat.

electrode lead. The electrical conductor between the source of arc-welding current and the electrode holder. Also called arc-welding lead and work lead.

electrogas welding. A method of gas metal-arc welding or flux cored arc welding wherein an external gas is supplied and molding shoes confine the molten weld metal for vertical-position welding.

electroslag welding. A welding process wherein coalescence is produced by molten slag that melts the filler metal and the surfaces of the work to be welded, that moves along the full cross section of the joint and shields the weld pool as welding progresses, and that is maintained molten by its resistance to electric current passing between the electrode and the work.

F

face of weld. The exposed surface of a weld, on the side from which welding was done.

faying surface. The surface of a member that is in contact or in close proximity with another member to which it is to be joined.

filler metal. The metal to be added in making a welded, brazed, or soldered joint.

fillet weld. A weld of approximately triangular cross section joining 2 surfaces approximately at right angles to each other in a lap joint, corner joint, or T-joint.

flat position. The position of welding wherein welding is performed from the upper side of the joint and the face of the weld is approximately horizontal.

flux cored arc welding. An arc-welding process wherein coalescence is produced by heating with an arc between a continuous filler metal (consumable) electrode and the work, shielding is obtained from a flux contained within the electrode, and additional shielding may or may not be obtained from an externally supplied gas or gas mixture.

G

gas metal-arc welding. An arc-welding process wherein coalescence is produced by heating with an arc between a continuous filler metal (consumable) electrode and the work, and shielding is obtained entirely from an externally supplied gas or gas mixture. Some methods called MIG or CO_2 welding.

gas pocket. A cavity caused by entrapped gas.

gas tungsten-arc welding. An arc-welding process wherein coalescence is produced by heating with an arc between a single tungsten (nonconsumable) electrode and the work, shielding is obtained from a gas or gas mixture, pressure may or may not be used, and filler metal may or may not be used. Sometimes called TIG welding.

groove weld. A weld made in the groove between 2 members to be joined: The most common standard types of groove welds are square, single-V, single-bevel, single-U, single-J, double-V, double-bevel, double-U, and double-J.

ground connection. The connection of the electrode lead to the work.

ground lead. See electrode lead.

H

horizontal position, fillet weld. The position of welding wherein welding is performed on the upper side of an approximately horizontal surface and against an approximately vertical surface.

horizontal position, groove weld. The position of welding wherein the axis of the weld lies in an approximately horizontal plane and the face of the weld lies in an approximately vertical plane.

I

inert-gas metal-arc welding. See gas metal-arc welding.

intermittent welding. A weld wherein the continuity is broken up by recurring unwelded spaces.

interpass temperature. In a multiple pass weld, the temperature (minimum or maximum, as specified) of the deposited weld metal before the next pass is started.

J

joint penetration. The minimum depth a groove weld extends from its face into a joint, exclusive of reinforcement.

L

layer. A stratum of weld metal, consisting of one or more weld beads.

leg of a fillet weld. The distance from the root of the joint to the toe of the fillet weld.

M

machine welding. See automatic welding.

manual welding. Welding wherein the entire welding operation is performed and controlled by hand.

metal-arc welding. See shielded metal-arc welding, submerged arc welding, gas metal-arc welding, flux cored arc welding, gas tungsten-arc welding, and stud welding.

N

notch effect.* The result of a notchlike detail of design, an abrupt change of contour or section, or of a defect or imperfection in workmanship that causes high local concentration of stress and constraint against ductile action, thereby affecting structural behavior adversely: Notch effects are especially detrimental to fatigue or impact strength and to resistance to brittle fracture.

O

overhead position. The position of welding wherein welding is performed from the side of the joint.

overlap.* Protrusion of weld metal beyond the toe of the weld.

oxygen cutting.* A group of cutting processes wherein the severing of metals is effected by means of the chemical reaction of oxygen at elevated temperatures with the metal being cut and the necessary temperature is maintained with the help of gas flames obtained from the combustion of a suitable gas (as acetylene) with oxygen. Sometimes improperly called gas cutting or burning.

oxygen gouging.* An application of oxygen cutting wherein a groove or a grooved chamfer or bevel is formed—used sometimes to remove weld defects and for back-gouging the root of a groove weld after one side of the groove has been welded, preparatory to welding the other side.

P

pass. A single longitudinal progression of a welding operation along a joint or weld deposit: The result of a pass is a weld bead.

peening. The mechanical working of metals by means of impact blows.

penetration. See joint penetration and root penetration.

plug weld. A circular weld made in one member of a lap or T-joint member to the other through a hole that may or may not have parallel walls and that may be partially or completely filled with weld metal. A fillet-welded hole or a spot weld should not be construed as conforming to this definition.

porosity. Gas pockets or voids in metal.

position of welding. See flat, horizontal, overhead, or vertical position.

preheating. The application of heat to the base metal prior to a welding or cutting operation.

R

reverse polarity. The arrangement of direct-current arc-welding leads wherein the work is the negative pole and the electrode is the positive pole of the welding arc.

root of joint. That portion of a joint to be welded where the members approach closest to each other: In cross section the root of joint may be either a point, a line, or an area.

root of weld. The points, as shown in cross section, at which the back of the weld intersects the base metal surfaces.

root opening. The separation between the members to be joined, at the root of the joint.

root penetration. The depth a groove weld extends into the root of a joint measured on the centerline of the root cross section.

S

seal weld. Any weld designed primarily to provide a specific degree of tightness against leakage.

semiautomatic arc welding. Arc welding with the filler metal feed controlled mechanically and the advance of the welding controlled manually.

shielded metal-arc welding. An arc-welding process wherein coalescence is produced by heating with an arc between a covered metal electrode and the work, shielding is obtained from decomposition of the electrode covering, pressure is not used, and filler metal is obtained from the electrode.

size of groove weld. The joint penetration or the depth of chamfering plus the root penetration when specified.

size of fillet weld. For equal leg fillet welds, the leg length of the largest isosceles right triangle that can be inscribed within the fillet-weld cross section.

skip sequence. See wandering sequence.

slag inclusion. Nonmetallic solid material entrapped in weld metal or between weld metal and base metal.

slot weld. A weld made in an elongated hole in one member of a lap or T-joint joining that member to that portion of the surface of the other member that is exposed through the hole that may be open at one end and may be partially or completely filled with weld metal. A fillet-welded slot should not be construed as conforming to this definition.

spatter. In arc and gas welding, the metal particles that are expelled during welding and that do not form a part of the weld.

staggered intermittent-fillet welding. Two lines of intermittent-fillet welding on a joint wherein the fillet weld increments in one line are staggered with respect to those in the other line.

straight polarity. The arrangement of direct current arc-welding leads wherein the work is the positive pole and the electrode is the negative pole of the welding arc.

stress. Internally balanced stress, resulting from thermal or mechanical conditions or treatment, that remains in a structure or member after all fabrication has been completed and the part has cooled to a uniform temperature.

stud welding. An arc-welding process wherein coalescence is produced by heating with an arc drawn between a metal stud, or similar part, and the other work part until the surfaces to be joined are properly heated when they are brought together under pressure, partial shielding may be obtained by the use of a ceramic ferrule surrounding the stud, and shielding gas or flux may or may not be used.

submerged arc welding. An arc-welding process wherein coalescence is produced by heating with an arc or arcs between a bare metal electrode or electrodes and the work, the arc is shielded by a blanket of granular fusible material on the work, pressure is not used, and filler metal is obtained from the electrode and sometimes from a supplementary welding rod.

surfacing weld. A type of weld composed of one or more weave beads deposited on an unbroken surface to obtain desired properties or dimensions (Fig. 14). Also called bead weld.

T

tack weld. A weld made to hold parts of a weldment in proper alignment until the final welds are made.

throat of fillet weld, theoretical. The distance from the beginning of the root of the joint perpendicular to the hypotenuse of the largest right triangle that can be inscribed within the fillet weld cross section.

throat of fillet weld, actual. The shortest distance from the root of a fillet weld to its face.

U

underbead crack. A crack in the heat-affected zone generally not extending to the surface of the base metal.

undercut. A groove melted into the base metal adjacent to the toe of a weld and left unfilled by weld metal.

V

vertical position. The position of welding wherein the axis is approximately vertical.

W

wandering sequence. A longitudinal sequence wherein the weld-bead increments are deposited at random. Also called skip sequence.

weave bead. A type of weld bead made with transverse oscillation.

weaving.* The deposition of weave beads.

weld. A localized coalescence of metal wherein coalescence is produced either by heating to suitable temperatures, with or without the application of pressure, or by the application of pressure alone and with or without the use of filler metal that either has a melting point approximately the same as the base metals or has a melting point below that of the base metals but above 800 F.

weldability. The capacity of a metal to be welded under the fabrication conditions imposed into a specific, suitably designed structure and to perform satisfactorily in the intended service.

welding rod. A form of filler metal used for welding or brazing wherein the filler metal does not conduct the electrical current.

weld metal. That portion of a weld that has been melted during welding.

welder. One who is capable of performing a manual or semiautomatic welding operation. Sometimes used erroneously to denote a welding machine.

welding operator. One who operates a machine or automatic welding equipment.

welding procedure. The detailed methods and practices, including all joint welding procedures, involved in the production of a weldment.

welding sequence. The order of making the welds in a weldment.

welding technique. The details of a welding operation that, within the limitations of a prescribed joint welding procedure, are controlled by the welder or welding operator.

weldment. An assembly whose component parts are joined by welding.

work connection. The connection of the electrode lead to the work.

work lead. See electrode lead.

THE NATIONAL ACADEMY OF SCIENCES is a private, honorary organization of more than 700 scientists and engineers elected on the basis of outstanding contributions to knowledge. Established by a Congressional Act of Incorporation signed by Abraham Lincoln on March 3, 1863, and supported by private and public funds, the Academy works to further science and its use for the general welfare by bringing together the most qualified individuals to deal with scientific and technological problems of broad significance.

Under the terms of its Congressional charter, the Academy is also called upon to act as an official—yet independent—adviser to the Federal Government in any matter of science and technology. This provision accounts for the close ties that have always existed between the Academy and the Government, although the Academy is not a governmental agency and its activities are not limited to those on behalf of the Government.

The NATIONAL ACADEMY OF ENGINEERING was established on December 5, 1964. On that date the Council of the National Academy of Sciences, under the authority of its Act of Incorporation, adopted Articles of Organization bringing the National Academy of Engineering into being, independent and autonomous in its organization and the election of its members, and closely coordinated with the National Academy of Sciences in its advisory activities. The two Academies join in the furtherance of science and engineering and share the responsibility of advising the Federal Government, upon request, on any subject of science or technology.

The NATIONAL RESEARCH COUNCIL was organized as an agency of the National Academy of Sciences in 1916, at the request of President Wilson, to enable the broad community of U.S. scientists and engineers to associate their efforts with the limited membership of the Academy in service to science and the nation. Its members, who receive their appointments from the President of the National Academy of Sciences, are drawn from academic, industrial, and government organizations throughout the country. The National Research Council serves both Academies in the discharge of their responsibilities.

Supported by private and public contributions, grants, and contracts, and voluntary contributions of time and effort by several thousand of the nation's leading scientists and engineers, the Academies and their Research Council thus work to serve the national interest, to foster the sound development of science and engineering, and to promote their effective application for the benefit of society.

The DIVISION OF ENGINEERING is one of the eight major Divisions into which the National Research Council is organized for the conduct of its work. Its membership includes representatives of the nation's leading technical societies as well as a number of members-at-large. Its Chairman is appointed by the Council of the Academy of Sciences upon nomination by the Council of the Academy of Engineering.

The HIGHWAY RESEARCH BOARD, an agency of the Division of Engineering, was established November 11, 1920, as a cooperative organization of the highway technologists of America operating under the auspices of the National Research Council and with the support of the several highway departments, the Bureau of Public Roads, and many other organizations interested in the development of transportation. The purpose of the Board is to advance knowledge concerning the nature and performance of transportation systems, through the stimulation of research and dissemination of information derived therefrom.

HIGHWAY RESEARCH BOARD
NATIONAL ACADEMY OF SCIENCES—NATIONAL RESEARCH COUNCIL
2101 Constitution Avenue Washington, D. C. 20418

ADDRESS CORRECTION REQUESTED

NON-PROFIT O
U.S. POSTAG
PAID
WASHINGTON,
PERMIT NO. 42

003901
LIBRARIAN
NATL ACADEMY SCIENCES
P.O. STOP 44

HIGHWAY
RESEARCH
BOARD

SPECIAL
REPORTS
110-116

TE7
.N3