bridge replacements with precast concrete panels

Mrinmay Biswas, Jerome S. B. Iffland, and Russell E. Schofield
URS/Madigan-Praeger, Inc., and
Anthony E. Gregory
New York State Thruway Authority

Methods of replacing existing distressed bridge deck slabs with precast concrete panels are presented. The general nature of the problem is explored, and the nature of force transfer in a bridge deck system is examined. The various methods of connection between adjacent slab panels and between the slab and stringer are then developed on a rational basis. Eight types of slab-stringer connections are detailed. Many of these would develop composite action. Some connections are welded, and others are bolted. Several types of shear connectors are used. A construction method is suggested that (a) presents a rehabilitated structure that is compatible in strength to the original, (b) provides rapid construction that causes minimal interference to normal traffic, and (c) allows full traffic capacity to be maintained during peak periods.

•Distress of cast-in-place concrete bridge decks is a widespread problem. The nature and severity of the problem and the difficulty of obtaining a satisfactory solution are recognized by various highway agencies. A rapid, structurally sound, and economic method of replacing distressed bridge decks is needed for all highway systems.

It is generally recognized that any viable method of rapid bridge deck replacement should make use of prefabricated units. The three major requisites considered for development of the proposed bridge deck replacement system are as follows:

1. The finished structure should be compatible in strength to the original;
2. Construction should be rapid and should cause minimal interference with the normal traffic; and
3. Full traffic capacity should be maintained during peak periods.

With these conditions as guidelines, the New York State Thruway Authority initiated a program of research and development, which included prototype construction. The research included a comprehensive review and evaluation of available methods of industrialized bridge deck construction that use prefabricated components (1-8). The results of this evaluation are not included, but the connection details presented reflect this research. This paper summarizes the results of the research and development program up to the beginning of the prototype construction.

NATURE OF THE PROBLEM

A typical bridge is shown in Figure 1. The bridge has horizontal and vertical curves,

Figure 1. Typical bridge span.

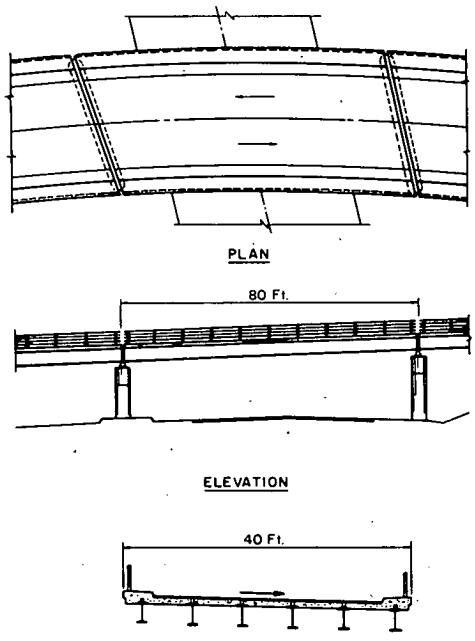

Figure 2. Basic types of load transfer in bridge deck and stringer system.

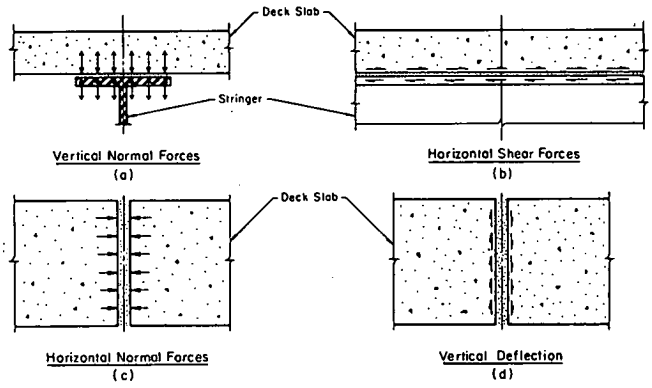

Figure 3. Transverse slab joints: (a) type F-F and (b) type M-F.

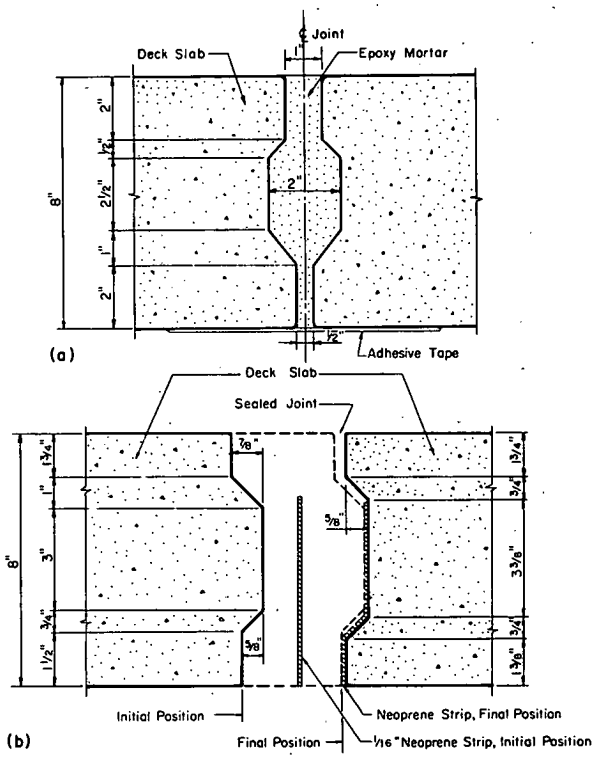

Figure 4. Connection system designations.

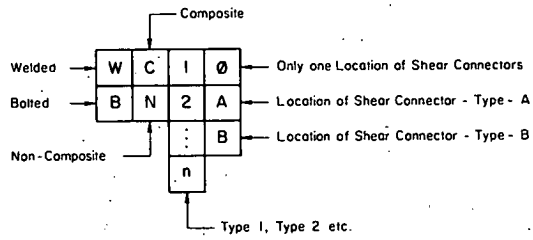

a skewed span, and a super-elevated roadway. The deck-stringer action is composite. Presumably traffic cannot be removed from the bridge during the reconstruction period. There are three distinct but interrelated problem areas: (a) developing a structurally suitable deck replacement system, (b) finding a safe, fast, and economical method of removing the existing deck slab, and (c) developing a construction procedure that causes the least interference to the traffic both on the bridge and under the bridge, which could be a roadway, a railway, or a waterway.

The greatest structural difficulty is to achieve proper matching, contacts, and connections among the various elements. Given normal tolerances of manufacturing, prefabrication, and construction and the realities of existing conditions, components do not fit together the way they are designed to. Moreover, if the existing deck is composite, it is probable that the replacement deck will also have to act compositely, especially inasmuch as the loading on many bridges might have increased since their construction. Requirements for composite action and construction time constraints impose further difficulty in developing a proper deck and stringer connection system.

Understanding the nature and basic mechanics of load transfer in the deck and stringer system would help us develop replacement methods on a systematic and rational basis. Types of load transfer are shown in Figure 2. The dotted area shown between two elements is a hypothetical force transfer medium. Any device used must be able to duplicate its function. The following load transfers are required.

Vertical normal forces [Fig. 2(a)] must be transferred between the slab and the top of the stringer. This is a basic type of transfer required for composite and noncomposite decks. The dead load and the wheel loads taken by the slab must be transmitted vertically down to the stringer (heavy arrow heads). Vertical upward forces caused by the negative reaction from the slab, which is continuous over several stringers in the transverse direction of the bridge, also have to be transmitted (light arrow heads). A general holding down action is also required to avoid lifting up and bouncing of the slab.

Horizontal shear forces [Fig. 2(b)] must be transferred between the bottom of slab and top of stringer. This is required mainly for composite action. Forces due to braking and wind also have to be transferred. Because the force transfer media [Fig. 2(a) and 2(b)] are placed in the same location, i.e., between the slab and stringer, they must be compatible.

Horizontal normal forces [Fig. 2(c)] must be transferred at the transverse joint between two adjacent precast slabs. This is required for composite action only. By virtue of this force transfer, the precast slab will be effective as the compression flange of the composite deck-stringer system.

Vertical deflection [Fig. 2(d)] compatibility must be maintained at the transverse joint between the two adjacent precast slabs. This is required for both composite and noncomposite action to provide a proper riding quality and to maintain the integrity of the wearing surface. Transfer of bending moment is not necessary. Therefore, the empirical AASHO formulas for longitudinal bending moment in the slab need not be used for design of these slabs. Force transfer media [Fig. 2(c) and 2(d)] must be compatible.

PROPOSED SLAB AND STRINGER CONNECTION METHODS

A series of slab and stringer connection methods have been developed for composite and noncomposite action, and these meet the requirements stipulated previously.

General Features

Transverse Joint—Two types of transverse joints are shown in Figure 3. Joint type F-F

Figure 5. Types of deck slab-stringer connections.

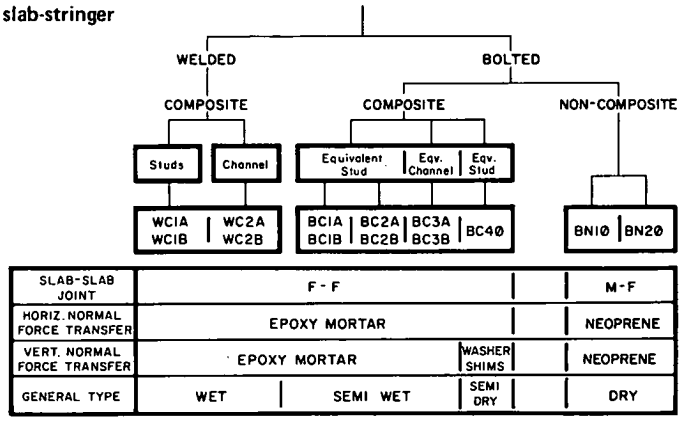

Figure 6. Connection type WC1A.

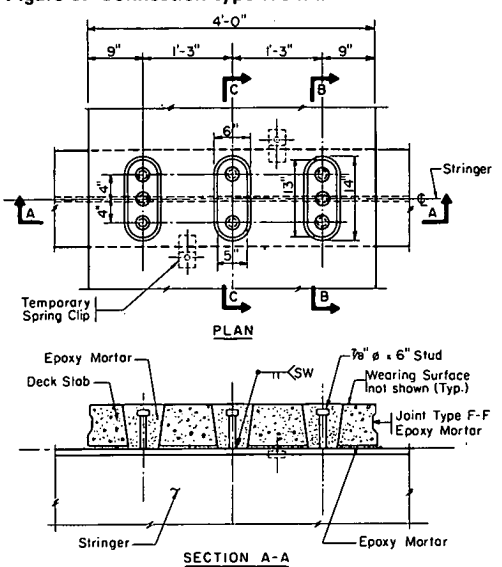

Figure 7. Connection types WC1A and WC1B.

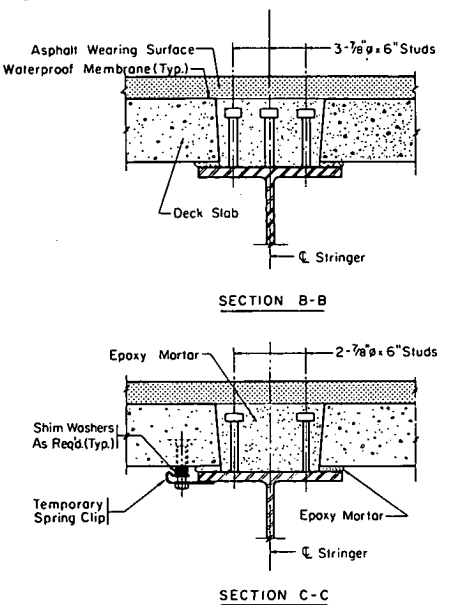

Figure 8. Connection type WC1B.

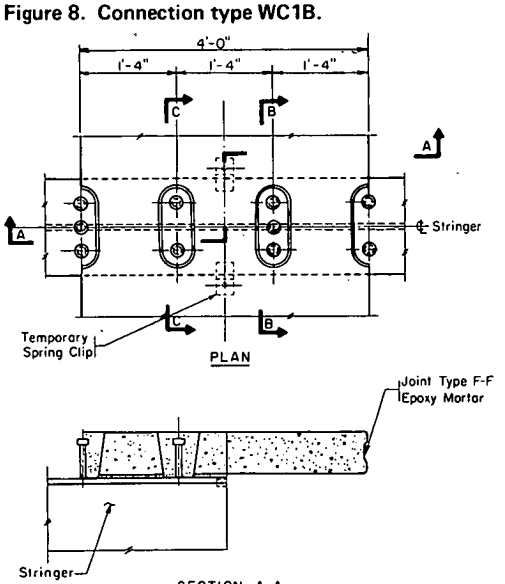

Figure 9. Connection type WC2A.

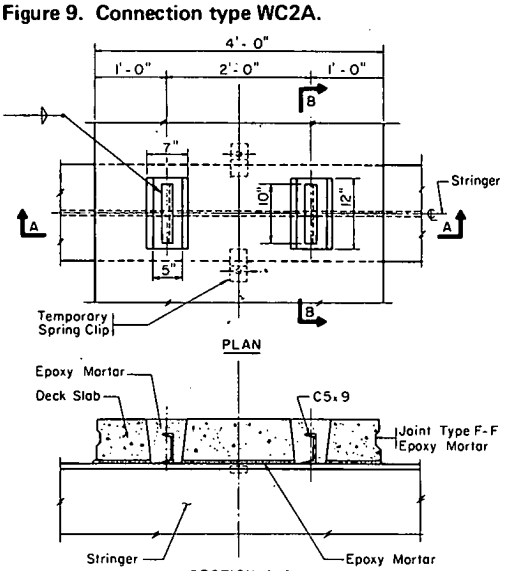

is suggested for all composite decks. Adjacent slabs are placed side by side as shown. Half-inch spacers can be used. Adhesive tape is applied to the bottom of the joint. Epoxy mortar is poured from the wider opening at the top and is allowed to seek its own level and set. Joint type M-F is suggested for noncomposite deck. This detail can be used with or without the use of posttensioning in the longitudinal direction of the bridge.

Connection Types and Designation—Over the years, the welded stud and welded channel shape have become the standard shear connectors used in cast-in-place composite deck construction. Because the precast deck is expected to duplicate the action of a cast-in-place deck, it would be logical to consider details that make use of these proven shear connectors. Systematic modification of these shear connectors results in other types of connection systems. Because horizontal shear transfer through the shear connectors plays a key role, the connection types are designated on the basis of the method of fastening these connectors to the stringer and the type of connectors. The principle used in designating the connection system is shown in Figure 4. The various proposed methods of deck slab stringer connection are shown in Figure 5. The designations will be evident as the various types of connections are explained below.

It was desired to develop a completely dry composite system. This, however, has not been achieved. A completely dry system is available for noncomposite deck only.

Slab-Stringer Connections

Type WC1A—This type of connection is a welded composite connection using field-welded studs. The essential features of this system are shown in Figures 6 and 7. The top of the stringer is accurately marked to position the studs to fit the tapered pockets in the slab, and the studs are welded in place. (Number of shear studs per 4-ft width can easily be varied, if required by design.) The top of the stringer is then thickly "buttered" with a nonflowing or gel type of epoxy mortar. The precast deck slab is then lowered on the stringer, next to an adjacent deck slab that has been placed before. The slab presses down on the epoxy mortar. The temporary clips are bolted to fasten the slab to the stringer, and the transverse joint is taped. The stud pockets and transverse joint are filled with poured-in epoxy mortar.

Construction proceeds to the next slab as the epoxy sets in the previous one. A completed deck will transmit all the joint forces mentioned earlier. Although the epoxy mortar pressed between the deck and the stringer is capable of transmitting horizontal shear, this is not relied on, and the shear studs are designed to take mechanically the full horizontal shear. Also, the tapered pockets provide the hold down force. This construction method is common to many of the connection types mentioned later.

Type WC1B—This is a variation of the previous method and is shown in Figure 8. Here, the stud lines are shifted in the longitudinal direction of the stringer. Two stud lines are placed at the transverse joint, resulting in an increased effective area of the slab in the transverse direction, which may be desirable.

This type of variation of type B from type A, by shifting the studs in the longitudinal direction of the stringer, is common to several of the methods of connections (Fig. 5) and will not be described in detail for all the applicable cases.

Type WC2A—This is a welded composite connection type 2-A that uses field-welded channels (Figs. 9 and 10). In certain cases a field fillet weld may be more reliable than the stud weld. Type WC2B is shown in Figure 11. Type WC2A is recommended over the type WC2B because, in the former, there are at least two connectors within the width of the precast slab.

Type BC1A—This is a bolted composite connection type 1-A (Figs. 12 and 13). The

Figure 10. Connection types WC2A and WC2B.

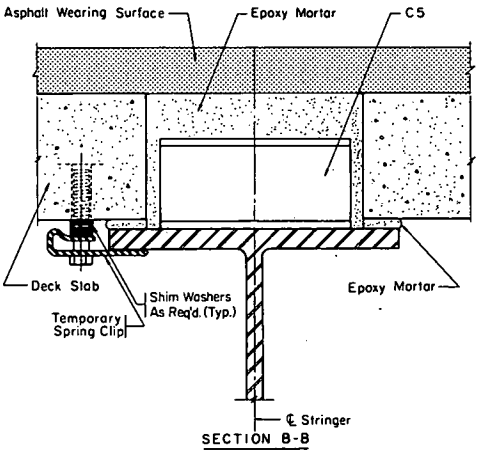

Figure 11. Connection type WC2B.

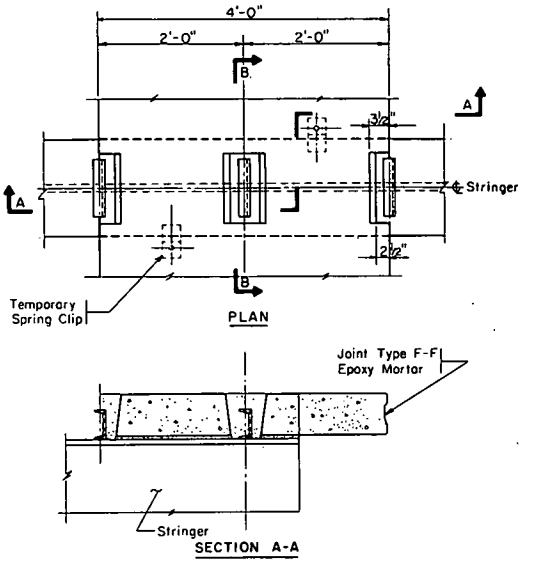

Figure 12. Connection type BC1A.

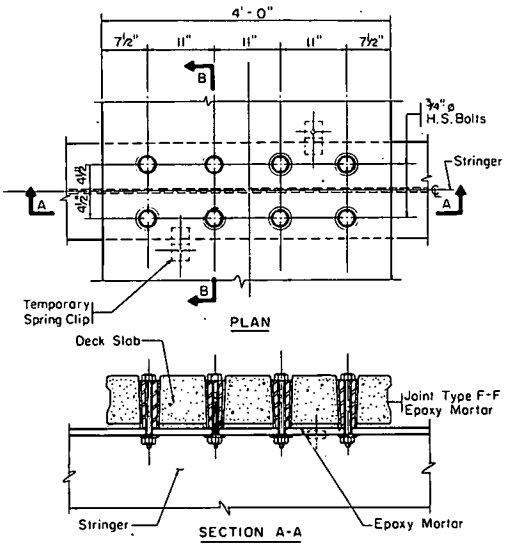

Figure 13. Connection types BC1A and BC1B.

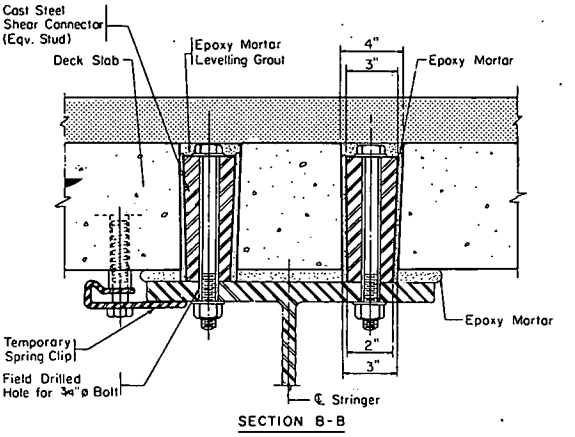

Figure 14. Connection types BC2A and BC2B.

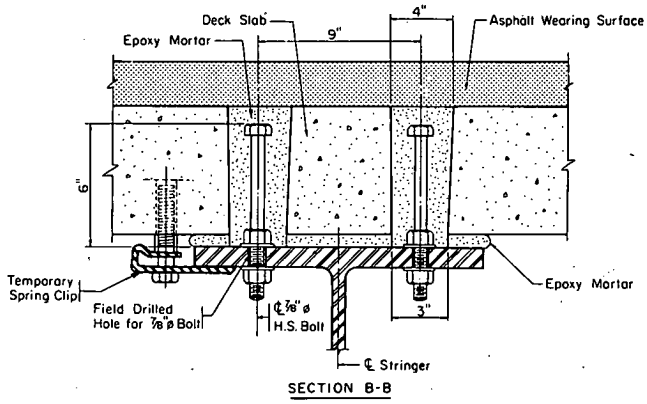

Figure 15. Connection type BC3A.

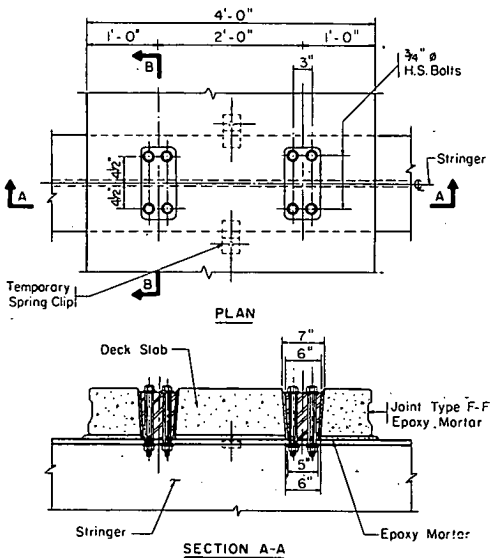

Figure 16. Connection types BC3A and BC3B.

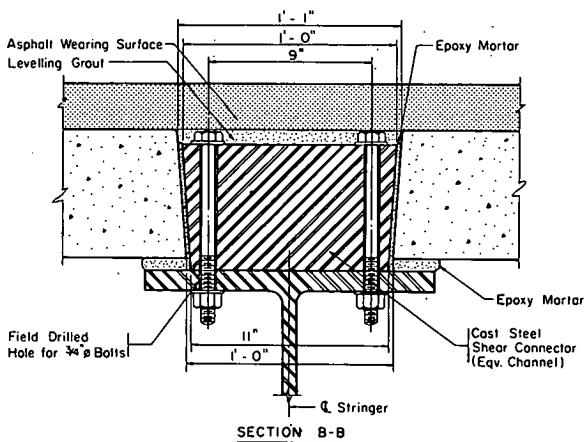

holes in the top flange of the stringer are drilled in the field. The tapered bushing types of cast steel shear connectors are "buttered" at the exterior surface with a thick epoxy mortar and are pushed down into the tapered pocket in the precast deck slab. A high-strength steel bolt fastens the bushing to the stringer flange. The assembly effectively acts as a shear stud. Type BC1B (not shown) is recommended over type BC1A.

Type BC2A—Type BC2A is similar to type BC1A and is shown in Figure 14. The bushing is not used. The high-strength bolt itself with two nuts serves as the shear connector (9). The tapered pocket in the precast slab is filled with poured-in-place epoxy mortar. Type BC2B (not shown) is recommended over type BC2A.

Type BC3A—This is the bolted equivalent of the welded channel shear connector and is shown in Figures 15 and 16. The construction procedure is similar to that of type BC1A. Type BC3A is recommended over type BC3B (not shown).

Type BC40—For type BC40 the connection between the slab and stringer is completely dry (Fig. 17). The pipe sleeves with top and bottom plates are integrally cast with the slab. The holes in the stringer flange are drilled after the slab is in place. The space between the slab and the stringer, if any, is snugly filled with shim washers. The slab is then tied down with high-strength bolts.

Type BN10—This is a slightly modified version of a method originally developed at Purdue University (3) and later used in two Indiana bridges. The system is noncomposite (Fig. 18). Use of pressed-down epoxy mortar is suggested. If the rail clips are tack-welded to the stringer flange, the precast slabs would have to be posttensioned in the longitudinal direction of the bridge in order to hold the slabs together.

Type BN20—This bolted noncomposite connection (Fig. 19) is suggested as an alternate to type BN10. In detail, it is similar to type BC40. Fewer bolts are used, and the bottom plate attached to the pipe sleeves is not needed. Use of interference-body bolt will eliminate the need of posttensioning the precast slabs in the longitudinal direction of the bridge, as used in the Purdue tests and the Indiana bridges. Neoprene shims are used to keep the system completely dry; epoxy mortar can be used if desired.

SEQUENCE AND METHOD OF CONSTRUCTION

The proposed method and sequence of construction are shown in Figures 20 through 27.

During most of the construction, traffic could be maintained at least in one lane. During peak periods, construction could be stopped to maintain two full lanes of traffic. The bridge will also be open during any peak period when construction is adjourned.

The key to the proposed construction method is a movable hinged plate assembly shown in Figures 28 and 29. The elements of the assembly can be prefabricated, brought to the site in parts, and assembled at site before construction begins. The hinge plate assembly can be used as standard equipment in deck replacement construction of several bridges.

With the method described, the time of shipping the precast deck slabs to the site, removing the existing deck slab, and placing the new slab can be scheduled to result in optimum use of manpower, material, and time available and to cause the least interference to the traffic.

PROTOTYPE CONSTRUCTION

Plans for bridge deck replacement using the results of the research and development

Figure 17. Connection type BC40.

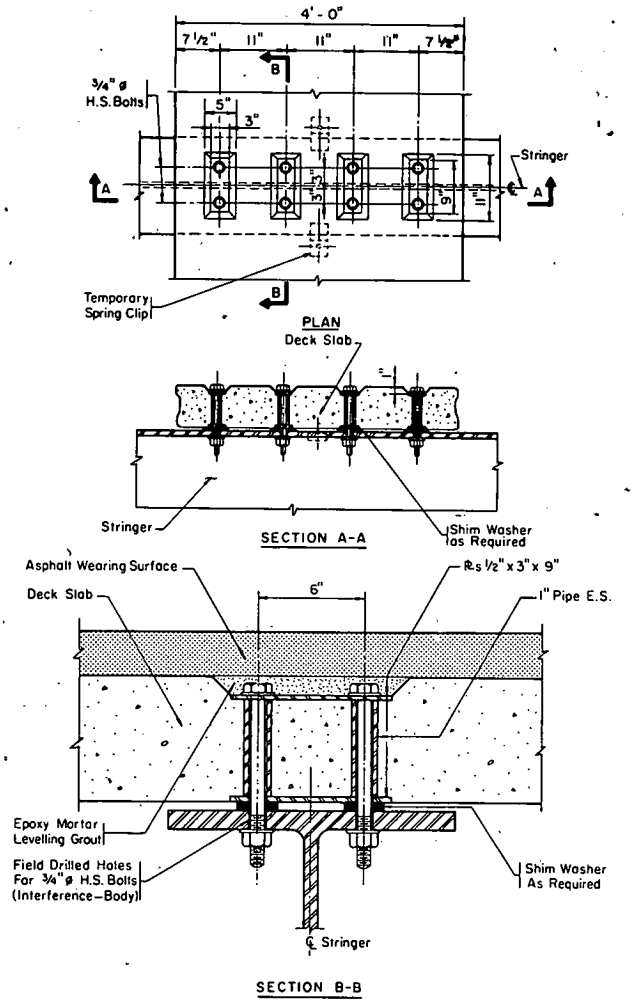

Figure 18. Connection type BN10 (modified Indiana version).

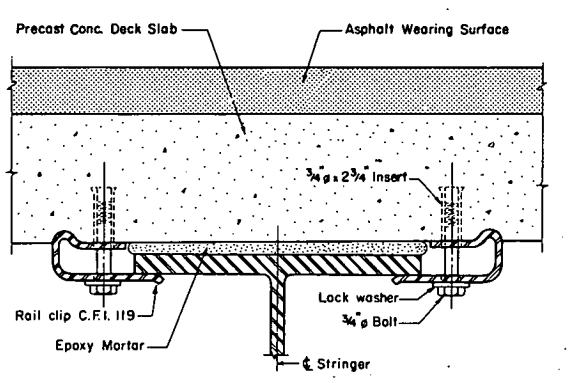

Figure 19. Connection type BN20.

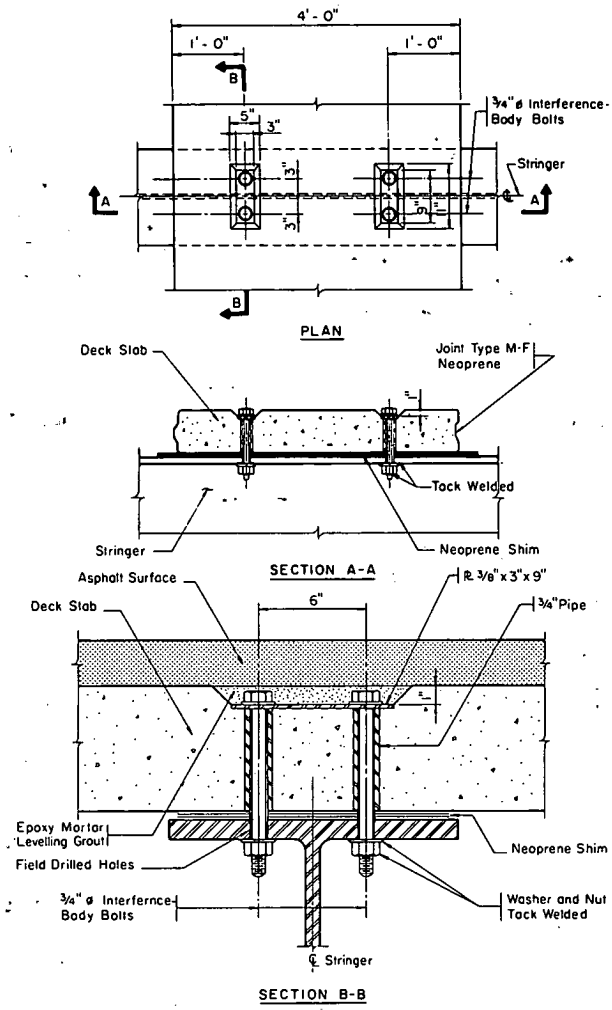

Figure 20. Typical two-lane bridge deck slab.

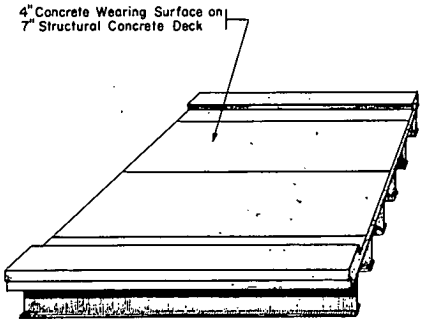

Figure 21. Hinged plates in place.

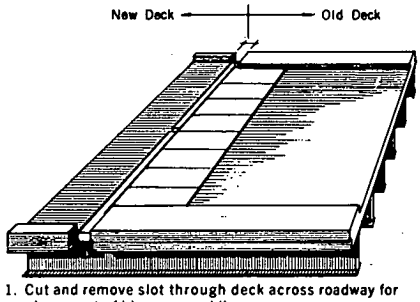

1. Cut and remove slot through deck across roadway for placement of hinge assemblies.
2. Install hinge assemblies and deck plates. Attach plates at hinge and rest other end on old deck.

Figure 22. Deck removal.

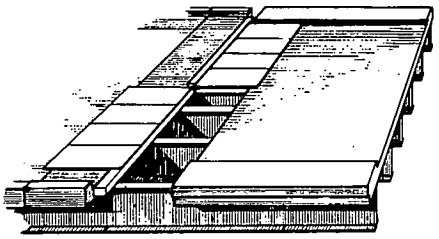

3. Maintain traffic on one lane during work period.
4. Remove length of deck under plates, opening individual plates as required.

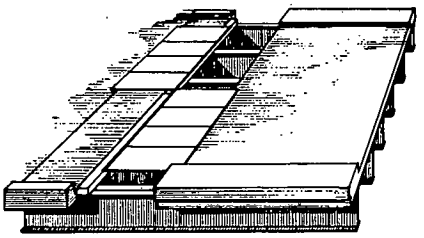

5. Shift traffic to opposite lane.
6. Remove remainder of deck.

Figure 23. Maintenance of traffic during construction.

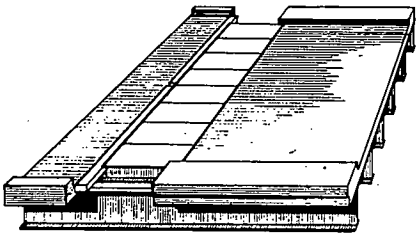

7. During peak traffic hours and when construction is suspended maintain traffic across open deck with steel plates in closed condition.

Figure 24 Replacement deck inserted.

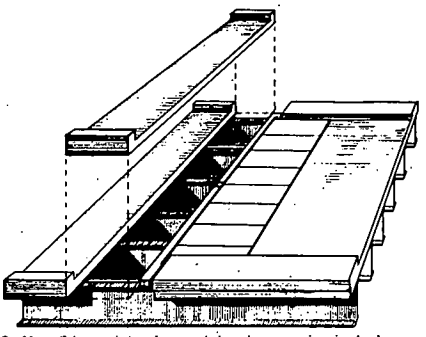

8. Move hinge plates forward, leaving opening in deck. Half length of assembly can be moved at a time to maintain traffic.
9. Prepare the surfaces as required for the connection method to be used. Shear connectors can be attached to stringers and epoxy mortar can be buttered on the top of the stringers at this stage. Traffic can be maintained on one lane by turning the plates over by 180°.
10. Drop in replacement slab unit.

Figure 25. Replacement deck unit connected.

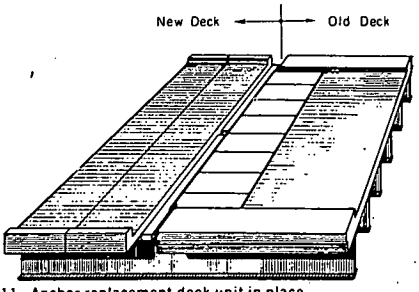

11. Anchor replacement deck unit in place.
12. Install shear connectors. Complete the deck to stringer connection and the transverse joint.

Figure 26. After one section of deck is completed, the process is repeated.

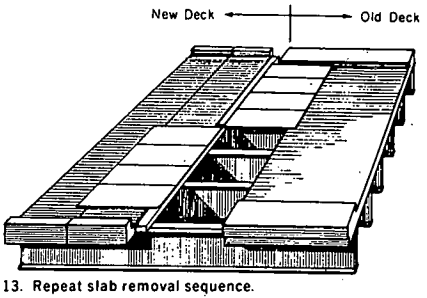

13. Repeat slab removal sequence.

Figure 27. Finishing of completed deck replacement.

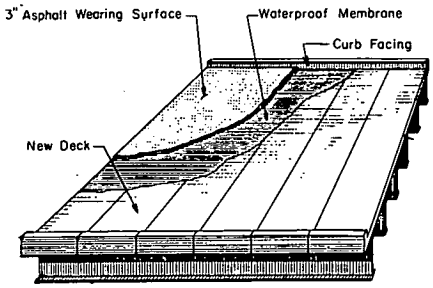

14. Add finishing accessories when weather permits.

Figure 28. Hinge plate assembly.

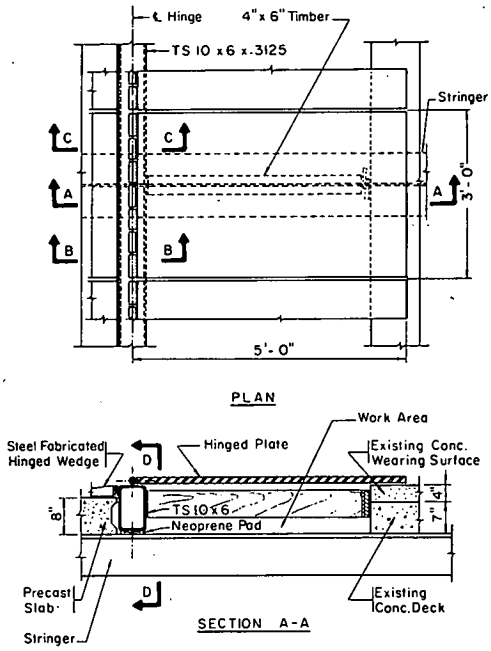

Figure 29. Hinge plate details.

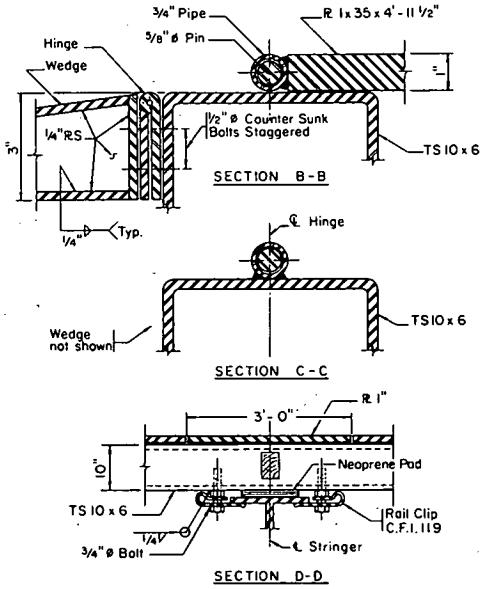

are in progress at the New York State Thruway Authority. Contract plans have been developed for one span of a straight, square bridge to be used as a prototype to test several of the various types of connections developed and the general method and sequence of construction. In connection with this work, tests of the epoxy mortar were conducted to evaluate shrinkage properties, ability to set under vibratory loads, and stud pull-out resistances.

In addition, contract plans are being developed for a second prototype bridge similar to the one shown in Figure 1. This prototype will introduce the problems of skew and curvature. On the basis of these prototype construction projects, it is anticipated that a standard method applicable to most of the New York State Thruway bridges can be established.

ACKNOWLEDGMENT

The research and development program is being executed under the direction of John P. Pendleton, chief engineer of New York State Thruway Authority, and John A. Tiesler, executive director of New York State Thruway Authority.

REFERENCES

1. Quick Repair System Tried. Michigan Roads and Construction, Vol. 68, No. 14, May 1971, p. 4.
2. System Building for Bridges. HRB Spec. Rept. 132, 1972.
3. Gutzwiller, M. J., Lee, R. H., and Scholer, C. F. Precast, Prestressed Concrete for Bridge Decks. HRB Spec. Rept. 116, 1970, pp. 30-41.
4. North, M. T. A Literature Survey on the Prefabrication of Short Span Bridges. Virginia Highway Research Council report, Aug. 1969.
5. Zuk, W. Industrialized Bridge Building. Constructor, Vol. 53, No. 4, April 1971, pp. 32-37.
6. Zuk, W. Prefabricated Highways. Proc. ASCE, Jour. Transportation Engineering, Vol. 98, No. TE2, May 1972.
7. URS/Madigan-Praeger, Inc. Highway Structures Design Handbook. Vol. I, Draft Chapter I/13: Box Girder Bridges. Unpublished report prepared for United States Steel Corp., Jan. 1967.
8. Kavanagh, T. C. Box Girder Bridge Design. Engineering Jour., American Institute of Steel Construction, Vol. 4, No. 3, July 1967, pp. 100-106.
9. Marshall W. T., and Banerjee, H. K. An Experimental Study of the Use of High Strength Friction Grip Bolts as Shear Connectors in Composite Beams. Structural Engineer, Vol. 49, No. 4, April 1971, pp. 171-178.