At the Transport and Road Research Laboratory, lighting research is concerned with both vehicle and roadway lighting. Work is under way to establish the relationship between road light levels and accidents. The research involves extensive measurements of light levels and detailed recording of accident data. These will be supplemented by the findings of studies of near accidents (conflicts) recorded at specific sites, which should indicate the effectiveness of both conventional and experimental lighting schemes. Nighttime driving is particularly difficult on wet roads, and therefore a photometric evaluation of all types of surfaces both wet and dry is being undertaken to provide physical measurements relating to the problem. Vehicle lighting research is mainly concerned with the investigation of headlight glare-reducing techniques. These include the possible use of dimmed headlight beams as presence indicators in lighted areas, median glare screens, and special low-glare head lamps. A study of the merits of the low-beam head lamp patterns developed in Europe and in the United Kingdom and the United States revealed little overall advantage for either, but showed that there was a considerable problem resulting from head lamp misaim due to vehicle loading. This problem is being tackled by the development of head lamp self-leveling systems.

LIGHTING RESEARCH AT THE U.K. TRANSPORT AND ROAD RESEARCH LABORATORY

Alexander Irving and J. Stuart Yerrell,
U.K. Transport and Road Research Laboratory, Crowthorne, Berkshire

In the United Kingdom, vehicle and roadway lighting is regarded primarily as a safety problem rather than as an aspect of traffic engineering. Thus the priorities in both research and application are dictated by the accident situation.

Some 30 percent of all personal injury accidents take place at night (87,644 out of a total of 264,453 in 1972). Since nighttime traffic is about a quarter of the total, this means an overall night accident rate about 1.3 times that of the day rate. Three-quarters of all night accidents occur on lighted roads, and about three-quarters of these are on roads lighted to the highest standard. An analysis of weather conditions has shown that the combination of wet roads and darkness gives the worst accident figures. Against this background the lighting research at the Transport and Road Research Laboratory (TRRL) falls into the categories discussed below.

EFFECT OF LIGHTING

Overall, studies have shown that installing roadway lighting effects a 30 percent reduction in the number of night accidents and a parallel reduction in accident severity. Some studies have discriminated between road types; for example, a recent British study showed a 50 percent accident reduction on 115-km/h trunk roads, and the current program to light motorways should achieve a comparable reduction. The motorway blanket speed limit is 115 km/h. Studies such as those of Turner (1) and Box (2) have attempted to relate accident rates to lighting levels, an area of vital importance for future lighting policy.

In March 1974 TRRL placed a $442,000 contract with a large commercial lighting firm to collect photometric data from actual roadway installations; those data will then be related to accidents at those locations. The opening phases of the work will use

conventional instruments and measuring techniques, but new ways of acquiring and processing the large amounts of data that this sort of work generates will be explored and developed.

An essential part of the research is the development of a mobile laboratory that will travel through the streets and continuously record significant factors such as roadway luminance in the driver's field of view. Initially the lighting quality criteria of the International Commission on Illumination (CIE) will be used (luminance level, uniformity, glare level); the contract is for 4 years and includes the development of both basic measurements and a method of assessing them.

CONFLICT STUDIES

The insensitivity of global accident figures to specific safety measures has led to the search for other objective measures with which to assess safety in particular circumstances. The basic problem can be summed up as a lack of sufficient numbers of accidents occurring at experimental sites. Preliminary laboratory experiments in which driver judgment and behavior were measured demonstrated the difficulties of interpreting specific results as a function of lighting levels or whatever and pointed to the even more difficult task of carrying out similar tests on real roads. A promising method of tackling the problem is to use conflicts (near accidents) observed in real road conditions.

Conflicts can be characterized as sharp, evasive traffic maneuvers. Most conflicts are resolved by one or more of the vehicles involved taking successful evasive action. Conflict recordings enable the frequency of occurrence of accidents to be predicted. Conflict data accrue much more quickly than accident data: Roughly 10 hours of conflict observation will give data comparable to 3 years of accident data. [Conflicts studied at a rural junction showed a spatial and temporal distribution positively correlated with accidents, Spearman rank order coefficients being 0.93 and 0.87 respectively (3)].

The situation leading to the conflict can be studied in detail after it has been recorded with suitable movie or television equipment. Tests have shown that adequate records may be obtained under most roadway lighting levels by using modern low-level films and cameras. In the planned research conflicts at junctions will be observed under different lighting conditions, including experimental lighting.

ROAD SURFACE CHARACTERISTICS

In 1970 a reappraisal of the British Standard Code of Practice for Street Lighting for Traffic Routes (4) was commenced, and particular attention was paid to the relationship of the code specifications to proposals made by the CIE (5). This work sparked a renewed interest by British street lighting engineers in the classification of road surface characteristics to be used in designing lighting installations. As a result, TRRL undertook a survey of the reflection characteristics of British roads.

The work comprised a survey made in cooperation with a Dutch firm to compare British and Dutch techniques for measuring luminance and reflection characteristics by taking sample measurements at a number of sites under various types of installation (6). The main findings are that the installations designed to the present British Code CP1004 gave luminance values that satisfactorily meet the CIE recommendations: The mean luminance levels of 82 percent of measurements were above the lower recommended minimum of 1 cd/m^2, and 43 percent were above the upper recommended minimum of 2 cd/m^2. The uniformity recommendation that the minimum local luminance should be not less than 0.4 of the mean level was met by 71 percent of the installations.

Reflection characteristics were recorded in different areas of the country on different surfaces with different textures at different times of the year. Such variability makes the design of the optimum lighting installations extremely difficult. The survey

gave some indication of the problem. However, a more detailed study of surfaces is being made in accordance with current CIE research recommendations. An apparatus is being constructed to record the complete reflection characteristics of a variety of road types; road samples will be subjected to traffic wear and will be examined under both wet and dry conditions. The data will be used for the prediction of the lighting performance of standard and unconventional lighting systems.

The reflection characteristics of wet roads need to be investigated further, and recommendations for surface texture requirements need to be formulated to improve uniformity of luminance. It is fortunate that the requirements for surface texture for all aspects of the wet-weather problem are compatible. For improvements in skid resistance and day and night visibility, all evidence points toward the need for macroscopically rougher textures. Additionally, the requirements for skid resistance demand a degree of harshness on a microscopic scale to maintain an acceptable level of performance. The requirement for road surfaces at night to have suitable texture to reflect light diffusely in wet weather demands both harshness and angularity of projections in the surface.

ROAD LIGHTING HARDWARE

Despite the beneficial effects of lighting, lighting supports are responsible for more than 5,000 personal injury accidents per year. Moving the lighting columns farther back from the road may reduce the risk of collision; however, this can only be done to a limited extent if maximum lighting efficiency is to be maintained. A breakaway lamp column has been designed for use on high-speed rural and semi-urban roads (7). The column breaks away just above the root when struck by a vehicle. The small impact produced by this type of column reduces the severity of injuries to passengers and damage to the vehicle.

The breakaway mechanism (Fig. 1) consists of a special slip joint by which the shaft of the column is attached to the root mechanism. Flanges welded to the shaft and root sections are clamped together by high-tensile steel bolts located in four 60-deg V-shaped notches in the outside edges of the flanges. The bolts are retained in the V-notches by a thin steel gasket between the flanges.

When the column is struck by a vehicle (contact is usually made 0.4 to 0.5 m above ground level), the shaft moves parallel to the root flange causing the bolts to tear the gasket. The bolts on the side away from the impact are carried away by the upper flange, and those on the impact side are retained in the V-slots of the lower flange. The shaft is thus released from the root section, and the lower end is propelled forward by the vehicle.

At collision speeds of more than about 50 km/h the shaft rotates about a point above the vehicle, allowing it to pass underneath. The final position of the shaft is such that it should not cause a hazard to following vehicles. The action is shown in Figure 2. At impact speeds of less than 50 km/h there is a risk that the shaft of the column will fall on the vehicle. To reduce damage to the vehicle and possible injury to passengers in these circumstances requires that the shaft of the column be as light as possible. Lightweight thin steel columns for 10- and 12-m mounting heights have therefore been designed.

Experience in the use of such columns has been gained from installation of 449 columns in five locations for which detailed accident records were kept. From experience to date it appears that the increased initial cost of breakaway lighting columns is more than offset by the savings in accident costs due to the reduction in accident severity.

The installations discussed so far were designed for roadside use. There is, however, a growing use of lighting on motorways and other high-speed roads where conditions are somewhat different. Columns located in medians are cheaper and more effective than those installed on the roadside. Using breakaway columns in such a position could be dangerous, for if struck they would fall into fast moving traffic in the opposite carriageway. The use of hard columns protected by safety fences also presents difficulties because of the lack of space on most median strips.

Figure 1. Details of breakaway joint in lighting column.

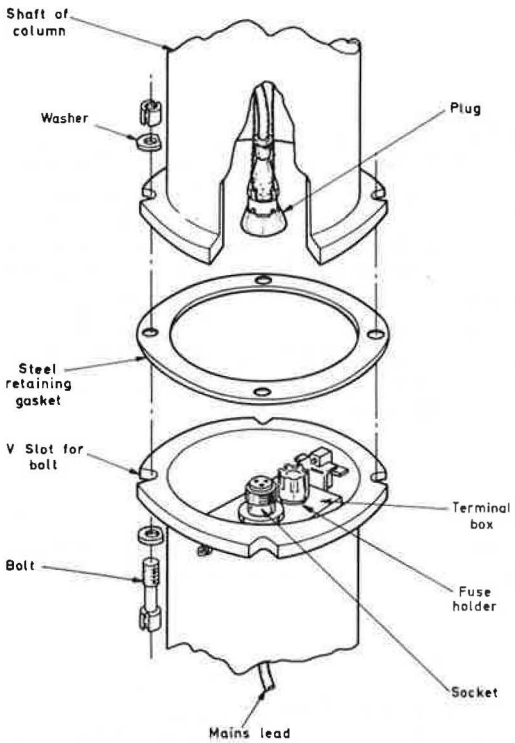

Figure 2. Column breaking away after impact.

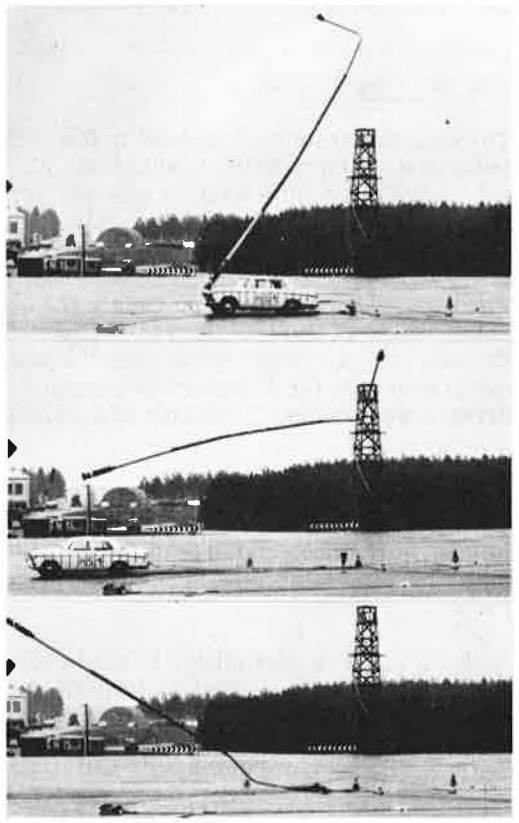

The solution developed at TRRL is to site breakaway columns with their bases set inside a double-sided tensioned-beam safety fence that is set on a single line of posts. The important feature of the design is that the tops of the columns are tied together by a wire rope. This prevents the column from falling once the base has sheared but allows it to be pushed aside. Impact tests at 113 km/h and at an angle of 20 deg proved that the system performed adequately.

The system was proved sufficiently to experiment on 1.5 km of two-lane dual carriageway. The columns were 12 m high at 50-m centers, each carrying double 3-m brackets, conventional sodium lanterns, and control gear. The top column connection was made with a 7-mm diameter steel wire rope clamped to the column. At the ends of the complete installation the cable was terminated at rigid columns and tensioned; these hard columns were protected by substantial safety fences. The bases of the breakaway columns were set between a double-sided steel W-section safety fence mounted on wooden posts. So far the experimental section has not been struck, but arrangements have been made to record the details of all accidents involving the installation.

VEHICLE LIGHTING IN LIGHTED AREAS

Like many other countries, the United Kingdom wants to determine the optimum lighting for vehicles traveling in lighted areas. It is generally accepted that dipped headlights are too glaring, and present sidelights are too inconspicuous. What

seems to be required is an intermediate or city light. TRRL favors the technique of dimming the dipped beam and, based on experiments using a manual system in 1966, an automatic system has been developed.

The Dim-Dip System

The dim-dip system, proposed in the early 1960s, simply incorporated an additional relay and resistor in the headlighting circuit of the vehicle. When the sidelight switch was operated and the ignition was on, between 6 and 8 V were applied to the low-beam headlights by use of a series resistance in the normal 12-V supply. This gave a dimmed intensity of about 10 percent of the normal beam. Full intensity could be selected by use of the normal switch position. Although the system was trouble-free and simple to use, when and where it should be used were entirely at the discretion of the driver. Inasmuch as use of the system was recommended for certain street lighting conditions, an obvious measure would be to sign the vehicle lighting to be used, but at present this is not practicable for a number of reasons. Thus there would always be a danger that drivers would select inappropriate lighting configurations.

The Fully Automatic System

In view of the shortcomings of the driver-controlled system mentioned above, an automatic headlight dimming system was developed. The system requirements were as follows:

1. It must be insensitive to the headlights of other vehicles;
2. It must give a variable level of dimming ranging from full intensity under very poor or no street lighting to full dimming under highest level street lighting;
3. It must dim at a slow rate but brighten up at a fast rate (e.g., when a driver suddenly enters an unlighted area); and
4. It must not dim the lights under conditions such as daylight fog.

The prototype device satisfies these requirements by responding only to the illumination coming from street lights (8). This is based on the fact that superimposed in all light emanating from street lamps is a fluctuating component due to the main supply frequency. In the United Kingdom, the fundamental frequency is 50 Hz resulting in a 100-Hz component. The device, therefore, detects the amplitude of the 100-Hz component in the light and adjusts the headlight intensity to its inverse magnitude.

The actual equipment comprises the following sections:

1. Photodetector and tuned ac amplifier—A silicon photodetector is coupled to a simple two-stage ac amplifier whose response is tuned to 100 Hz. The amplifier output is substantially zero when the cell receives steady illumination no matter what its strength.
2. Memory circuit—Because the headlight intensity is to be proportional to the amplitude of the ac amplifier output, it is necessary to prevent minor fluctuations of the signal causing a constant flickering of the light. This is achieved by providing a degree of signal integration.
3. Headlight intensity-modulating circuit—The variation in headlight intensity is achieved by using a square wave modulated supply and varying the mark-space ratio of the wave according to the output of the integrator circuit.

Units are being produced so that a controlled trial can be conducted in Central London.

VEHICLE LIGHTING TO REDUCE GLARE

Recent research on vehicle lighting (other than that described above) has been concentrated on vehicle headlights and has not included signaling and presence lights.

The object of any headlight system is to provide adequate illumination of the road scene ahead while creating minimum glare to other road users, particularly oncoming drivers. Thus the intensity pattern of the meeting (low) beams has been designed to emit as little light as possible above the horizontal, particularly on the driver's side of the road. Within this general design two distinctive beam patterns have been evolved. In Britain and North America a light pattern with a graduated cutoff but fairly high intensity on the near side has been adopted (Fig. 3a). In continental Europe, designers have concentrated on reducing glare as much as possible, resulting in a beam pattern that has a sharp cutoff shaped to allow illumination over relatively long distances on the near side (Fig. 3b).

Both beam patterns have their proponents and opponents. However, a series of controlled experiments together with field surveys in Britain and in continental Europe (9) has shown little to recommend one beam over the other.

Field Surveys

Surveys were made of actual head lamp intensities on roads where the two types were in common use. To assess the European beam, surveys were made in Belgium, Holland, Germany, and France. Four sites in Britain were used to record the Anglo-American beams. Intensity measurements were made on dual carriageways (divided highways) (a) toward the near side 60 m in front of the vehicle and (b) in the direction that would have caused glare to an oncoming driver about 60 m away had the road been a typical two-way single carriageway. The measuring equipment was stationed in the median (Fig. 4).

The results shown in Figure 5 indicate that glare intensities from the European beams were typically half those of the Anglo-American beams, but still much higher than expected from the photometric requirements of the beam. The illumination values of the two types were similar, and seeing distances were found to be comparable with the two systems. However, a typical European driver would be at a disadvantage in a population of Anglo-American beams, and, correspondingly, a British driver would have the advantage in a population of European beams.

Seeing Distance Measurements

With opposing cars using low beams in different meeting situations, the distances at which an object could be recognized were recorded. The object had a luminance factor of 0.07, was 0.45 m high, and had a recognizable shape. The speed of approach to the object was always 48 km/h. On lighted roads comparisons were made on straight sections only, whereas on unlighted roads comparisons were made on straight, curved, and undulating layouts. Results given in Table 1 show that the degree to which either beam can reveal an object depends on road layout and transverse location of the object on the road. On unlighted roads Anglo-American beams give greater recognition distances for near-side objects, whereas European beams reveal off-side objects at greater distances. Overall, there is no advantage of one type of beam over the other.

Detailed analysis of the results also showed that the speed of a vehicle bore no relation to the light output of its low beams and that whatever the country drivers were driving well outside the range of their lamps. This confirms the well-recognized view that, despite recent advances in head lamp technology, present low beams are inadequate for safe and comfortable night driving at today's speeds.

Figure 3. (a) Anglo-American and (b) European beam patterns.

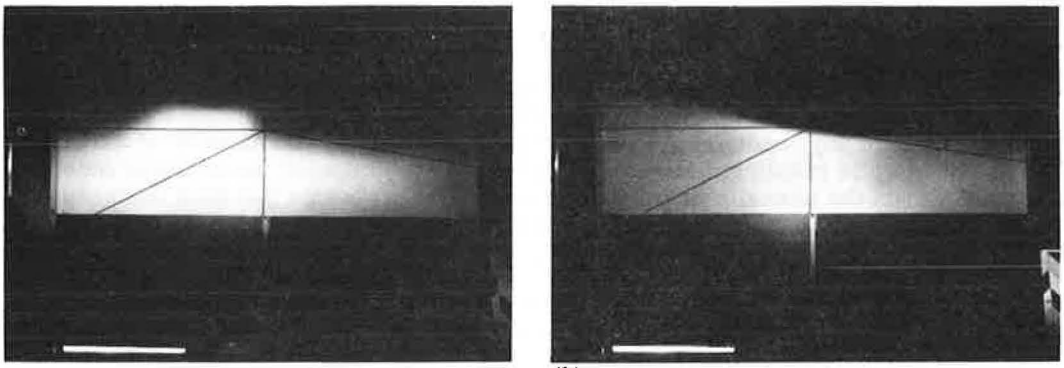

(a) (b)

Figure 4. Layout of the test sites.

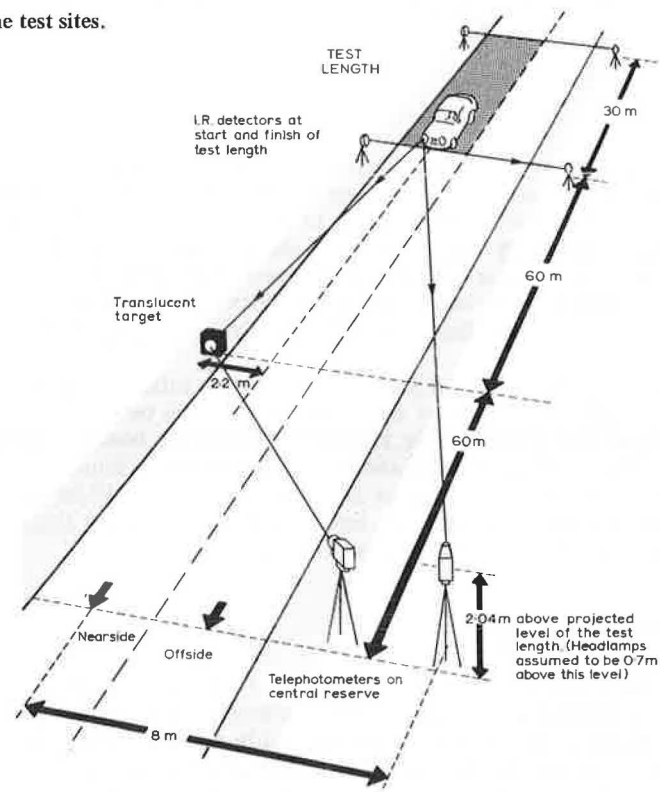

Figure 5. Distribution of headlight intensities in the illumination and glare directions.

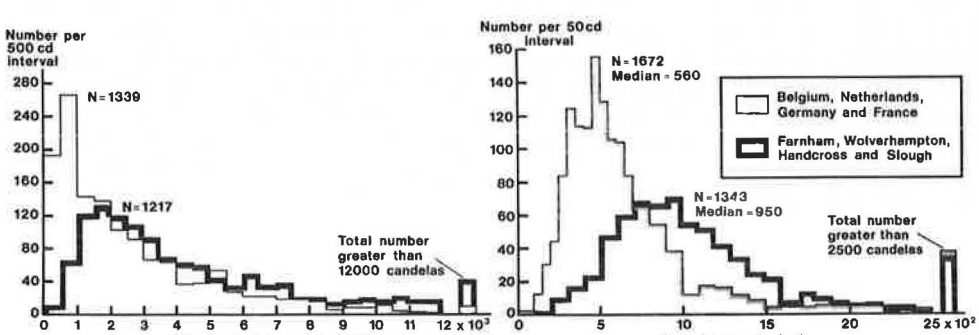

SELF-LEVELING HEAD LAMPS

One result of the extensive tests of the Anglo-American and European beam patterns reported above was that the finer points of the beam design tend to be nullified in practice by variations in aim, cleanliness, and so on. A roadside survey (10) in Britian showed that there was a need for some correction of lamp aim to compensate for vehicle loading (30 percent of vehicles were tilted up by more than ½ deg and 7 percent by more than 1 deg), and simple systems have been devised to achieve this (11).

The problem has been solved by pivoting the head lamps in their mountings and making them tilt to compensate for vehicle body movements. The correction signal (and driving force) comes from the movements of the vehicle wheels relative to the body. A French company developed a hydraulic system, and a British organization has developed an even simpler mechanical system. Both systems have been fitted to TRRL vehicles and tested for leveling response to static loads in all positions within the car and the response to movement of the front and rear wheel pairs at various low frequencies.

Both hydraulic and mechanical systems corrected well for static loads. Figure 6 shows the angle through which the head lamp tilted for various angles of body tilt. The 45-deg diagonal represents perfect compensation, and it can be seen that both systems gave good results for rear loading. The poorer results for front loading were simply a matter of the system sensitivity and could be compensated for by adjustments.

The system received some criticism because the head lamp beams seemed to be divorced from the vertical movements of the vehicle. However, such criticism would probably disappear with use. The incorporation of a self-leveling system into mass-produced vehicles at the production stage, used in conjunction with modern high-performance headlights, would contribute to the reduction of glare due to lamp misaim caused by vehicle loading.

POLARIZED LIGHT

In general, reducing glare caused by fixed headlight beams also reduces illumination; the history of head lamp development may be seen as a continual search for adequate road illumination without causing intolerable glare. Polarized headlighting systems, which first became a practical possibility following Land's invention of sheet polarizers in the late 1920s, are once more being investigated. The United Kingdom is participating in a project of the Organisation for Economic Co-operation and Development that could lead to a large cooperative international test. The technical problems are well on the way to a final solution, the unknown areas being those of driver behavior, public opinion, and practical implementation.

OTHER SYSTEMS

The polarized light system is a cooperative system that requires all vehicles to be equipped if the full benefits are to be achieved. There are alternative systems worthy of consideration. The Lucas company in Britain has developed a self-regulating head lamp (12), known as the Autosensa, that provides the user with improved seeing distances without demanding his action to reduce glare to the opposing driver by lowering his beam. This and other devices and ideas on scanning and producing flexible beam patterns are being considered at TRRL. However, all ideas examined so far have been complicated and expensive and have not shown any worthwhile advantage over the modern well-designed sealed-beam head lamp unit.

ANTIGLARE FENCES

On motorways and other divided highways glare problems may be greatly reduced by the

Table 1. Seeing distances (in meters) with Anglo-American and European head lamps.

Road	Near-Side Object			Off-Side Object		
	Anglo-American Beam	European Beam	Percentage Increase	Anglo-American Beam	European Beam	Percentage Increase
Lighted	217.7	225.0	3.3[a]	145.4	152.0	4.5
Unlighted						
Straight	51.4	50.4	-1.9	22.1	24.8	12.7[a]
Left curve	37.5	32.6	-13.0[a]	40.9	40.9	0
Right curve	25.8	27.6	6.5	15.6	21.8	39.7[a]
Bottom of hill	26.5	26.8	1.1	16.8	16.7	-0.6
Top of hill	48.5	42.3	-12.8[a]	23.7	24.6	3.8

[a]Significant change.

Figure 6. Head lamp tilts of self-leveling systems.

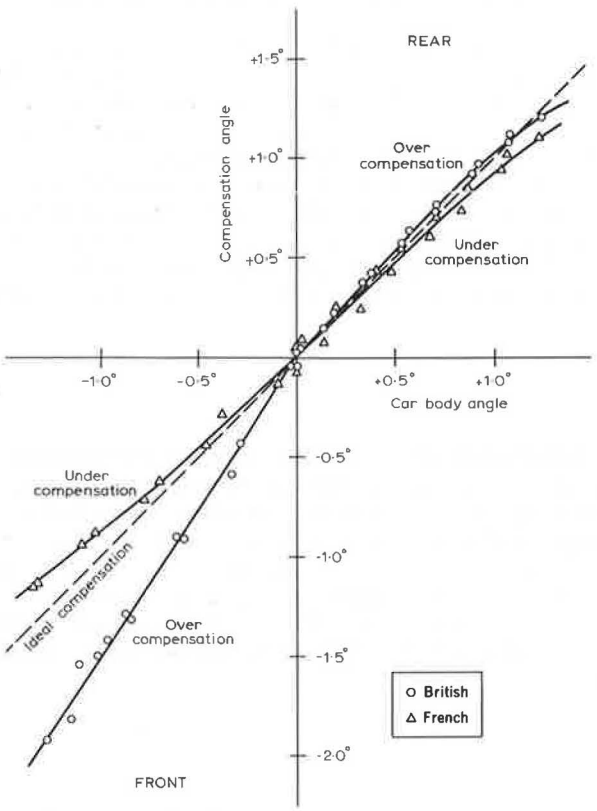

Figure 7. Experimental antiglare fence.

Figure 8. Close-up of attachment of vanes to tensioned safety fence.

provision of a fence or other structure in the median that intercepts light from the opposing headlights. Such a structure need not be solid; it is sufficient if it cuts off the light up to a given angle from the straight ahead direction, leaving the view directly across the road relatively unobscured.

The height of a screening structure above the road need only be 1.75 m above the road in order to provide adequate protection in 98 percent of the meeting situations. Any type of structure that satisfies the particular geometrical requirements will suffice if it also meets the necessary requirements for strength, wind loading, fatigue, cost, and appearance. A wide variety of materials from shrubs to expanded metal panels have been used for antiglare screens.

The benefits of antiglare screens were assessed by installing a fence of the vane type on 19.5 km of the M6 motorway. This particular type of fence was recommended as the most acceptable environmentally by the British Landscape Advisory Committee.

The general appearance of the fence is shown in Figure 7, and Figure 8 shows a close-up of the attachment of the vanes to the tensioned safety fence. Figure 8 also illustrates how the visibility across the motorway is relatively unaffected by the presence of the vanes.

Accident rates recorded on the fenced section will be compared with those occurring on lengths of lighted motorway. The experiment could also be regarded as being a field trial of the effects of glare on accident rate, albeit under the best motorway driving conditions.

REFLECTORIZATION AND EDGE MARKING

Lighting research inevitably spills over into other areas. The effectiveness of reflectorized materials is one example and one that is highly relevant in the United Kingdom now that parking without lights is permitted in lighted urban areas. Another area is the effectiveness of pavement edge markings; a study of accident records is under way to see whether there is a significant safety benefit from edge marking as distinct from a general improvement in driving comfort and amenity.

CONCLUSION

In lighted areas it is possible to achieve technically almost any reasonable level and quality of lighting, at least in dry weather. The debate centers around the economic justification for different levels and thus the need for more evidence on the link between lighting and safety.

In unlighted areas the situation is somewhat different; the technical barriers are still of paramount importance (even a fully polarized headlight system cannot compare in general terms with a lighted highway), and the driving force for improvements in this area may well have to be amenity as much as safety.

ACKNOWLEDGMENT

Any views expressed in this paper are not necessarily those of the Department of the Environment. This is reproduced by permission of Her Majesty's Stationery Office.

REFERENCES

1. P. C. Box. Comparison of Accidents and Illumination. Highway Research Record 416, 1972, pp. 1-9.
2. H. Turner. The Influence of Road Lighting on Traffic Safety and Service. Proc., Australian Road Research Board, Vol. 1, 1962.

3. B. R. Spicer. A Study of Traffic Conflicts at Six Intersections. U.K. Department of the Environment, TRRL Rept. LR 551, 1973.
4. British Standard Code of Practice CP 1004: Parts 1 and 2. British Standards Institution, 1963.
5. International Recommendations for the Lighting of Public Thoroughfares. International Commission on Illumination, CIE Document 12.
6. E. Sabey. Road Surface Reflection Characteristics. U.K. Department of the Environment, TRRL Rept. LR 490, 1972.
7. A. E. Walker. Field Experience of Breakaway Lighting Columns. U.K. Department of the Environment, TRRL Rept. 660, 1974.
8. J. S. Yerrell. The Automatic Dimming of Headlights in Lit Streets. Lighting Research and Technology, Vol. 5, No. 3, 1973, pp. 162.
9. J. S. Yerrell. Headlamp Intensities in Europe and Britain. U.K. Department of the Environment, TRRL Rept. LR 383, 1971.
10. H. J. Hignett. Vehicle Loading and Headlight Aim. U.K. Department of the Environment, TRRL Rept. LR 329, 1970.
11. J. S. Yerrell. The Performance of Two Self-Levelling Headlamp Systems. U.K. Department of the Environment, TRRL Rept. LR 378, 1971.
12. H. V. Hicks. A Fresh Approach to an Idea for Seeing at Night. Presented at Automotive Engineering Congress, Detroit, Jan. 1970.

Before the need for fixed roadway lighting can be determined, driver visual needs must be identified. This paper first discusses driver performance on the levels of positional, situational, and navigational tasks and relates these levels to visual information needs. Field studies were conducted to refine the visual needs and to determine the pattern and frequency of needs on both controlled- and non-controlled-access facilities. The results of these field studies are presented. The responses of study teams consisting of four professionals and four lay drivers are outlined, and generalizations were drawn from their questionnaire responses.

FIXED ILLUMINATION AS A FUNCTION OF DRIVER NEEDS

Ned E. Walton,
Texas Transportation Institute, Texas A&M University

One of the most important characteristics of the twentieth century is the extent to which the automobile has provided mobility. The effect on society created by this mass mobility has yet to be fully understood. One effect, however, is apparent: Highway engineers are faced with the challenge of providing a safe and efficient system of streets and highways.

An analysis of highway accident statistics suggests that the highway engineering profession has not yet met this challenge for nighttime conditions. The night accident rate exceeds the day accident rate, and the fatality rate at night is two to three times that of the daytime fatality rate (23). A number of factors, including differences between the day and night driving population in terms of age, sex, amount of fatigue, and percentage of drinking drivers, contribute to the higher night rates.

It is generally concluded, however, that the absence of a good visual environment at night is one of the primary reasons for the higher rates. This conclusion is supported by research that showed decreases in night accidents and fatality rates after fixed roadway lighting was installed (6, 10, 23).

Fixed roadway lighting probably offers the most comprehensive means of correcting poor night visual environments. When properly applied, roadway lighting can provide quick, accurate, and comfortable seeing conditions for the night driver and can result in an overall improvement in highway accident statistics.

Although the state of the art in roadway lighting has progressed dramatically in the last few decades, shortcomings still exist. Roadway lighting design processes do not fully address themselves to the function that lighting is to serve. Currently there is no process for roadway lighting design that adequately relates to the visual needs of the driver. Lighting needs are specified in terms of traffic volumes, accident experience, and characteristics of abutting property, usually defined as commercial, industrial, or residential. These factors in turn serve as warranting conditions. Design criteria are specified in terms of lighting a roadway surface rather than in terms of providing an environment suitable to the driver. Priorities for lighting installations are normally based on accident experience, traffic volume, or political influences.

Ideally, the design process should be based on requirements of the visual environment. If roadway lighting is to improve the driver's visual environment, a method must be established for determining the driver's needs. When these conditions can be specified, it will be possible to rationally consider requirements for a suitable visual environment that can be provided by fixed roadway lighting. The requirements of the night driving visual environment must also be identified, and these, in turn, must be systematically studied so that design procedures can be developed that will assist the designer in meeting these requirements through roadway lighting.