Japanese Experience With Highway Noise and Noise Abatement Measures

Teruki Kitamura and Yasumasa Torii, Japan Highway Public Corporation

Japan's economic growth since the 1950s has increased transportation demand, and a nationwide highway system is now being constructed. One of the main issues regarding highway improvement is to harmonize highway construction with its surrounding environment. This report describes the Japanese experience with noise abatement measures, including the use of absorptive and reflective barriers, shelters, plantings, and buffer zones. Because of the high population density and much mountainous country, use of alternative routes has proved extremely difficult. Cost comparison studies indicate that both on-highway (barriers) and off-highway (building insulation) noise abatement measures should be used for effectiveness and economy.

Rapid development of the Japanese economy since the latter half of the 1950s has dramatically increased automobile traffic. In 1973, approximately 70 percent of all freight and 52 percent of all passengers were carried by motor vehicles. Registered vehicles increased from 3.4 million in 1960 to 24.6 million in 1974. However, length of paved highway per vehicle has not kept pace with this growth. At the end of 1974, Japan had 12.4 m of highway per vehicle; the United States had 24.0 m/vehicle, nearly twice as many.

To deal with this increased demand, we have devoted our efforts to developing a nationwide highway network by implementing several 5-year road improvement programs, which include improvements to national highways, prefectural and municipal roads, and expressways. This rapid growth of motor vehicle traffic has also enlarged market areas, increased mobility, raised the standard of living, and had other impacts on society and the urban environment.

In the course of this economic development, population and socioeconomic activities have concentrated in the urban areas, precipitating increased congestion and traffic accidents. This, in turn, has brought about a deterioration in the urban environment. In the rural areas, highway construction has often led to the destruction of the natural environment. The adverse effects of the automobile (exhaust fumes, noise, vibration) and the highways (separation of local areas and communities, sunshine obstruction, environmental damage) have been observed and have turned many against the automobile and highway construction.

Thus, the most serious problem facing Japan now and in the future is combining economic growth and environmental harmony while developing an affluent society and a congenial environment. In this report, we present some examples of highway impact in Japan, emphasizing noise and noise abatement measures.

BACKGROUND OF ENVIRONMENTAL PROBLEMS IN JAPAN

The government has attempted to harmonize highway construction with the environment

by formulating laws and regulations setting environmental quality standards regarding noise and air pollution. Table 1 gives the noise level standards.

When construction of a new highway is begun, future noise levels are estimated by highway authorities such as the Japan Highway Public Corporation based on the projected traffic volume generated by the new highway. Residents involved are shown countermeasures that will be used if necessary to achieve the environmental quality standard for areas facing highways (Table 1). However, they insist that the highway authority either meet the environmental quality set for residential areas (area A in Table 1) or preserve the present state of the environment. Thus, in many places throughout Japan, highway construction is deadlocked and not expected to advance.

A common saying in Japan is, "Agree in principle but question particular points." Applied to highway construction, highway construction is approved in general but disapproved in or around a particular community. The government realizes the necessity of highway construction and is prepared to provide buffer zones, noise barriers with absorptive structures, and shelters to abate noise. To cope with exhaust emissions, traffic control and regulation of overloaded vehicles are enforced, though effective measures have not yet been worked out. Compensation for radio-TV wave disruption and sunshine obstruction has been established, and provision of insulation measures, such as the improvement of window structures, has been adopted.

HIGHWAY AUTHORITY RESPONSE

Measurement and Estimation of Noise

As previously stated, the basic goal of the highway authority regarding noise pollution is to achieve the environmental quality standards for areas facing highways (Table 1). Route location and structure design of a proposed highway are determined based on that standard. The noise level of existing highways is measured by a standardized method (Z8731 of the Japanese Industrial Standards).

To forecast future noise levels of a proposed highway, empirically derived models, analytical models, and simulation models have been developed. Most commonly used is an analytical model for which the Japan Highway Public Corporation employs a modified version of an equation developed by the Japan Acoustics Academy.

$$L_{50} = L_w - 8 - 20 \log 1 + 10 \log \pi \frac{1}{d} \tanh\left(2\pi \frac{1}{d}\right) + d2 + i$$

where

L_{50} = medium noise level, dBA;
L_w = power noise level of 1 vehicle, dBA;
1 = distance between the center of traffic lanes and sound receiving point, m;
d = headway, m;
d2 = correction factor for diffraction of line source; and
i = correction factor to adjust the difference between calculated and measured noise levels, mainly the difference due to the effect of surface characteristics.

A noise model experiment is conducted to estimate noise levels under a complicated highway structure, along the roadside or at a particular location. A nonecho room at the Japan Highway Public Corporation makes it possible to estimate the noise levels of an expressway under various conditions by using a typical cross section. At the same time, the scale model is used to evaluate the effectiveness of various noise abatement measures.

Noise Abatement Measures

The Environmental Quality Standard Related to Noise states that comprehensive measures to reduce noise and achieve the standard are necessary. Measures to be employed are not restricted to the highway itself but include improvement of automobiles, promotion of urban redevelopment, traffic control and regulation, and intensifying traffic enforcement. To date, these measures have not been fully implemented, resulting in some residential complaints.

Although the countermeasures discussed below have been provided by the highway authorities, they are, of themselves, insufficient to deal with the problem. Three highway corporations have recently requested 7 transportation-related industries, such as automobile manufacturers, tire manufacturers, trucking and bus service industries, to develop their own noise abatement measures.

Proposed Highways

Highway authorities pay careful attention to ensure that proposed highways are coordinated with land use plans and other public works programs. However, solutions through route alternatives are difficult in Japan because the density of residential districts, which are widely distributed in the inhabitable areas, is high. Schools, hospitals, and other facilities that require quiet are regarded as important control points, and efforts are made to keep the route as distant from them as possible.

If the highway must pass through a residential area, noise abatement levees, barriers, plantings, or shelters are used to supplement highway alignment and structure in order to conform to land use patterns and the need for quiet. Noise abatement measures of facilities are designed to accommodate 10-year traffic volume projections. If estimation is difficult, design or construction or both are done to facilitate any future remedial work that may be necessary.

In September 1974, the Standard Related to the Acquisition and Operation of Right-of-Way to Preserve Highway Environment was established. Applicable where a trunk road with 4 or more lanes is newly built or improved, the standard recognizes the necessity to preserve the natural environment adjacent to the road. The width specified for the area to be taken as part of the right-of-way is 10 m from the edge of the roadway along both sides. If heavy night traffic is anticipated, the width is expanded to 20 m. The area thus obtained is to be used and properly maintained as a space for plantings and noise barriers and can be used when necessary for sidewalks, bikeways, or roads excluding through traffic.

Highways in Operation

For highways in operation, noise barriers are the most commonly used remedial measures. A few sections exist, however, where a shelter is planned or considered in response to complaints from residents adjacent to the highway. Although research on barriers as a means of noise abatement has just begun in Japan and no design criterion has yet been established, the Japan Highway Public Corporation has developed a tentative standard in which design load, positioning of barriers, height, lengths, and property of materials used are specified.

Two types of noise barriers are employed: reflective and absorptive. Both are expected to have an attenuation effect because of the diffraction of sound. The question of which is to be used is dependent on other external factors.

A reflective panel is used where the reflective effect of the barrier is deemed negligible, i.e., where only one side of the highway needs to be protected and no houses are located on the other. Otherwise, absorptive barriers are used. A typical cross section of each of the noise barriers is shown in Figure 1; attenuation effects are shown in Figure 2.

Where noise barriers are used in a continuous line, importance is attached to using

plantings and barrier design both to preserve the aesthetics of the surrounding environment outside the highway and to diminish any feeling of being closed in within the highway. Figure 3 shows such a barrier design.

Traffic Control and Regulations

If the noise abatement measures for existing highways are insufficient to control noise, traffic control, based on consultation with the Public Safety Commission and the police, may be used. Among the measures to be taken are restriction of traffic volume and speed, lane designations, and the regulation of overloaded heavy vehicles.

Although restriction of overall traffic for noise control is difficult, regulations specifying type of vehicle and the time of day for their use are in effect in some urban areas. On multilane roads and streets in urban areas, experimental traffic regulations require large vehicles, considered to be the noisiest, to drive on the innermost lane, increasing their distance from adjacent buildings. Regulation of overloaded large vehicles is facilitated since all expressways in Japan are toll roads. Loadometers are placed at most of the toll barriers, and weigh meters are stationed at strategic locations to aid in enforcement of load regulations.

Speed control has also been used in an attempt to control noise emissions. On a toll road operated by the Japan Highway Public Corporation in suburban Tokyo, the speed limit of 80 km/h was reduced to 60 km/h. On a section of the Metropolitan Expressway in Tokyo, the speed limit was reduced from 60 km/h to 50 km/h, and a movement is under way to have the reduced speed limit applied to the complete expressway. On the intercity expressways, we have been asked by the police to lower the current speed limit on one section in response to residential complaints regarding highway noise.

Examples of Noise Abatement Measures

Highways in Operation

As of June 1975, the Japan Highway Public Corporation operated approximately 1600 km of expressway, of which 79 km (as of March 1975) have noise barriers in place. In fiscal year 1975, an additional 40 km will be protected with noise abatement barriers. However, there exists approximately an additional 150 km where neighboring residents are complaining about highway noise. Plans are to provide additional noise abatement measures, mainly barriers, according to a 3-part priority system based on roadside conditions. Of the noise barriers installed in fiscal 1973, 43 percent were absorptive and 57 percent were reflective; 38 percent were on bridges and viaducts, 58 percent were on embankments, and 4 percent were on cuts; and 90 percent of the absorptive barriers were on bridges and viaducts and 92 percent of the reflective barriers were on earthwork sections.

Highways Under Construction and Planning

Recognizing the necessity and importance of coordinating highway construction at the planning stage with neighboring housing developments, we have worked out a method to deal with noise pollution. In the event a housing development is planned adjacent to a proposed highway, every effort is made to coordinate and adjust plans to reduce noise levels. Among measures considered are to provide an adequately wide green belt or buffer zone and to install noise abatement measures, if necessary. Possibilities also include rearrangement or improved structural design of housing. Noise abatement procedures for proposed highways are illustrated by 2 highway construction projects.

The first project is a section of an expressway in suburban Tokyo, where the process of deciding on highway structure and noise abatement measures took approximately 3½ years. Both the expressway and a city street bisected a residential district. Al-

Table 1. Environmental quality standard related to noise.

Item	Noise Level (dBa) Daytime	Morning and Evening	Nighttime
Area			
AA-hospitals and similar facilities	≤45	≤40	≤35
A-residential	≤50	≤45	≤40
B-mostly residential, some commercial and industrial	≤60	≤55	≤50
Areas facing highways			
≤2 lanes in area A	≤55	≤50	≤45
>2 lanes in area A	≤60	≤55	≤50
≤2 lanes in area B	≤65	≤60	≤55
>2 lanes in area B	≤65	≤65	≤60

Figure 1. Cross section of noise barriers.

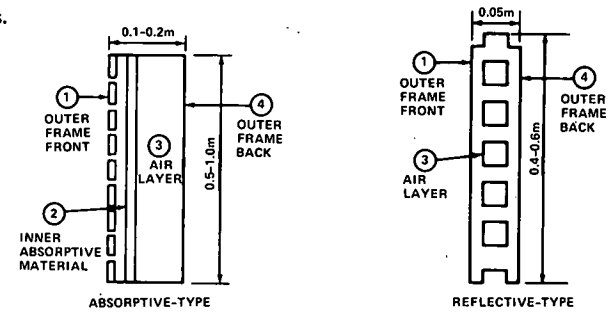

Figure 2. Effect of noise barriers on both sides of 6-lane highway.

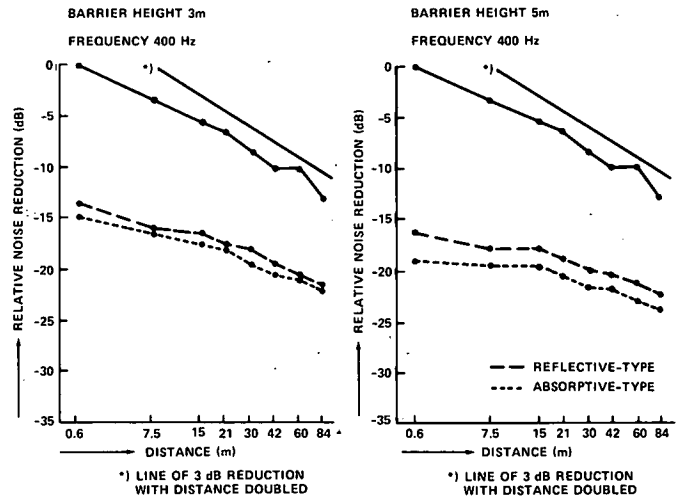

Figure 3. Example of aesthetically well-designed noise barrier.

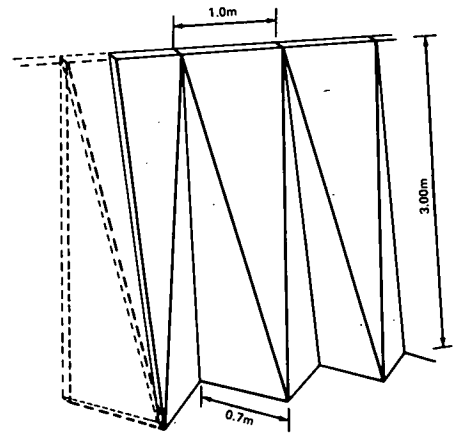

though the highway programs had been established when the housing development plan was under consideration, insufficient information was given tenants regarding the proposed highway. Later, when we explained the expressway construction project to the residents, a considerable amount of hostility was aroused. Four different measures to preserve the environment around the housing complex were proposed and closely examined: noise barriers, a highly elevated viaduct, a tunnel, and a highway with a shelter.

The shelter plan, with a length of 245 m, was finally adopted on the condition that it would not adversely affect adjacent areas (Figure 4). A steel structure with double walls, the shelter is lined with absorptive panels to increase the noise attenuation effect. Compliance with the environmental quality standards was demonstrated by a scale model of the shelter equipped with noise barriers at the approach sections. From a highway structural-design aspect, however, the section is undesirable, for it aggravates the highway environment within, poses potential hazards in the event of accidents and fire, and causes pollution problems at and around the mouth.

The length of the second project, mostly a cut section, is approximately 1000 m and provides an example of well-coordinated planning of highways and housing developments. In the area where residential houses were planned, the Japan Highway Public Corporation purchased 20 m of additional right-of-way, measured from the shoulder, to be used for noise barriers and also to be planted with trees. A service road and low-rise houses are planned by the housing corporation in areas adjacent to the planted zone. Medium-height buildings, which rise above the noise barriers, are to be located as far from the highway as possible (Figures 5 and 6).

Cost Estimate of Noise Abatement Measures

Comparisons were made on the basis of effectiveness, total cost, and allocation of costs between the provision of facilities separately and in combination. The underlying premise of the study was that noise reduction down to 60 dBA could be attained by measures taken on the highway, and further reduction to 50 dBA should be attained by insulating the houses.

The cost of noise abatement measures on the Tomei (Tokyo-Nagoya) and the Meishim (Nahoya-Kobe) expressways, 540 km in length and now open to traffic, was estimated by drawing noise contours on aerial photos. A comparison of the estimated costs gave the following results:

1. To achieve exterior noise levels of 50 dBA at night by using highway measures only would cost $1830 million;
2. To achieve exterior noise levels of 60 dBA at night by using highway measures only would cost $197 million;
3. To achieve exterior noise levels of 50 dBA or interior noise levels of 40 dBA at night by using highway and roadside measures would cost $362 million; and
4. To achieve exterior noise levels of 60 dBA or interior noise levels of 50 dBA at night by using highway and roadside measures would cost $97 million.

In this cost estimate, measures taken on the highway for reducing noise included providing barriers of 3 and 5 m in height and a shelter. Measures taken off the highway to further reduce noise included insulating houses (along part of the roadway, some houses were replaced). Calculations of cost were based on a classification of roadside developments into ordinary residential housing, medium height and higher buildings, hospitals and schools, and factories and warehouses.

The estimate assumes that the cost of insulating the houses will be borne by the highway authority. To date, however, agreement has not been reached as to whether the exact form of payment will be compensation of loss, damage reparation, or a subsidy. Not in effect yet, the final decision will lead to a revision of related laws.

From this, it can be seen that noise reduction brought about by focusing solely on the highway is considerably more expensive than measures that combine both the highway and housing.

Figure 4. Plan of the Karasuyama-Kita housing complex along the Chuo Expressway.

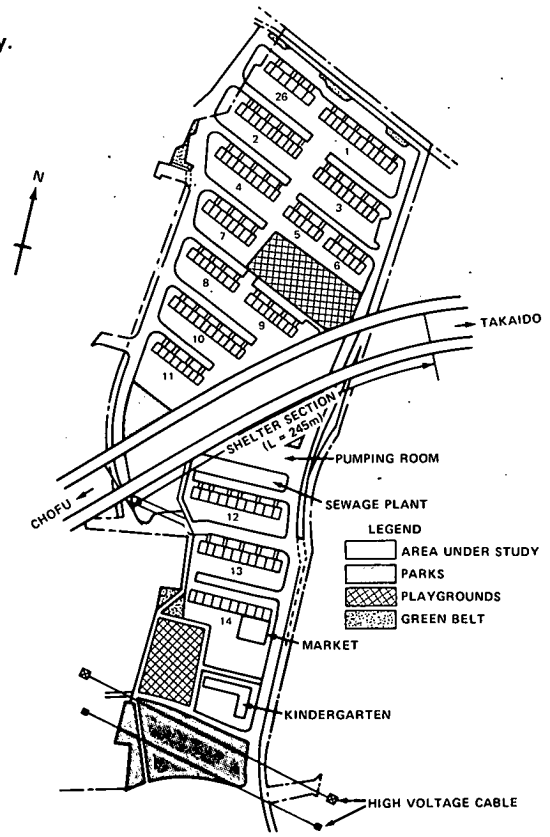

Figure 5. Plan of the Kawatsuru housing complex along the Kan-etsu Expressway.

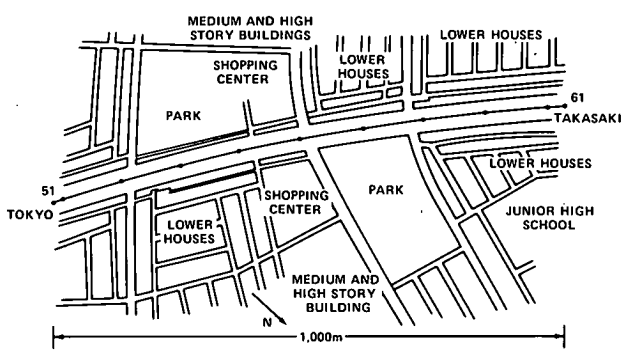

Figure 6. Typical cross section of the Kan-etsu Expressway near the Kawatsuru.

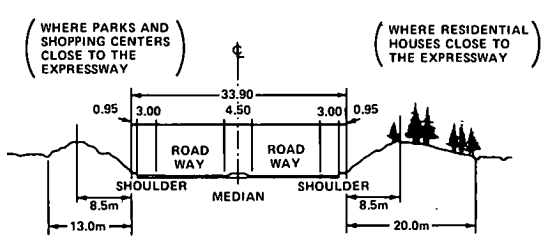

CONCLUSION

Land for transportation use in Japan is quite restricted since the total amount of land available is limited, a portion of it is mountainous, and land requirements for socio-economic activities are increasing. At the same time, however, improvement of the functionally systematized highway networks is essential to ensure the continuance of these activities. The main issue regarding highway improvement then becomes one of harmonizing highway construction with its surrounding environment, both urban and natural.

This description of noise abatement measures in Japan emphasized the experience of the expressways. Noise abatement measures are extremely expensive if they focus solely on the highways. Measures must include not only improvement of the highway structure itself but also coordination with neighboring land use plans, insulation of residential houses, traffic control and regulation, and improvement of automobiles. Efforts should also be made to use the buffer zone, legally established to be taken as part of the right-of-way, to preserve the environment and aesthetics.