The Effects of Highway Design Standards on Snow and Ice Control Operations

Robert A. Hogan, New Hampshire Department of Public Works and Highways

Despite the many technological improvements of modern highways, there are new projects being designed and constructed with insufficient recognition of maintenance problems, especially those involving snow and ice control. The complications of urbanization, increased traffic, greater variation in vehicle size, initial cost restraints or considerations and ecological considerations have forced designers away from "the basics" thereby compromising highway safety. The hazards created by snow melt are explored and remedies suggested to either eliminate or substantially alleviate these and other problems to provide for greater safety and reduce maintenance costs. Methods are also offered on various techniques to obtain greater recognition by designers and constructors of the maintenance aspects of highway engineering thereby averting costly revision after maintenance becomes responsible for new highway sections.

There is no doubt in the minds of any highway engineer, regardless of the phase of specialization, that safety is a primary objective in providing modern highway facilities. However, many projects are still designed and constructed with insufficient recognition of the maintenance aspects, particularly in the area of snow and ice control, and have a direct bearing on safety.

Obviously, icing can least of all be tolerated on curves and interchanges, especially at ramp intersections with cross roads controlled by stop signs or traffic signals. The problem of snow melt which creates a wet pavement condition during the day can become treacherous glare ice at night. Maintenance personnel are cognizant of the potential hazard and take necessary precautions to alleviate these conditions. Such action takes a great amount of effort and is extremely costly in terms of manpower, equipment and materials year after year.

The additional cost of salting and/or sanding these trouble spots over a short period of time would more than pay for the increased construction cost of preventative measures, and most importantly, a much safer highway would be provided.

Maintenance engineers must impress upon designers to become more aware of this problem and implement designs to eliminate, or at least substantially alleviate, these hazardous situations. It will not be easy particularly in view of the fact that highway geometrics are now greatly influenced by environmental and political pressures more so than basic engineering decisions. Administrators are forcing designers to minimize costs thereby imposing another restraint, which in actuality is false economy.

The only solution is to begin a concentrated campaign calling these problems to the attention of administrators, as well as design and construction people.

First, let's take a brief look at some of these problems and suggested remedies.

Bridges

The design of bridge decks on banked curves for the most part have a cross section with a straight line grade from curb to curb with sidewalks sloped downward toward the pavement. (See Figure 1.) Snow plowing operations produce windrows of snow on the sidewalks or catwalks creating a snow melt problem until the snow is either physically removed or completely melts from the high side of bridges. Normally roadway cross sections are designed with a break in shoulder slope on the high side of banked curves such that snow melt runoff remains on the shoulder running along the snow windrow to suitable outlet. There appears to be no reason why screeds cannot be set to construct a similar cross section on bridge decks as on roadway sections. These screeds are set to establish a crown on bridges located on tangents and with relatively minor adaptations the proper cross section can be provided on superelevated bridges as shown in Figure 2. Bridge drains located so plows can easily keep them clear are necessary to capture the snow melt.

Many people feel that deicing chemicals are major contributors to the deterioration of bridge decks and support structures, and with the flexibility built into modern bridges, this is probably true. However, the suggested design criteria would reduce the number of saltings by as much as one half in many areas of the country.

Figure 1

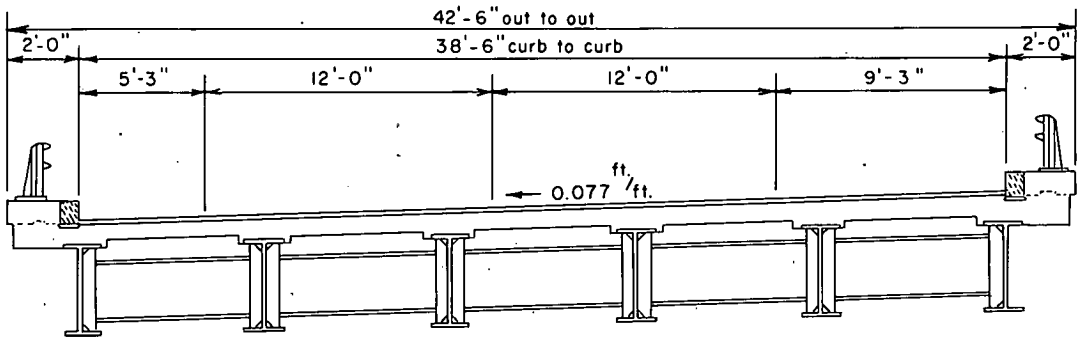

Figure 2

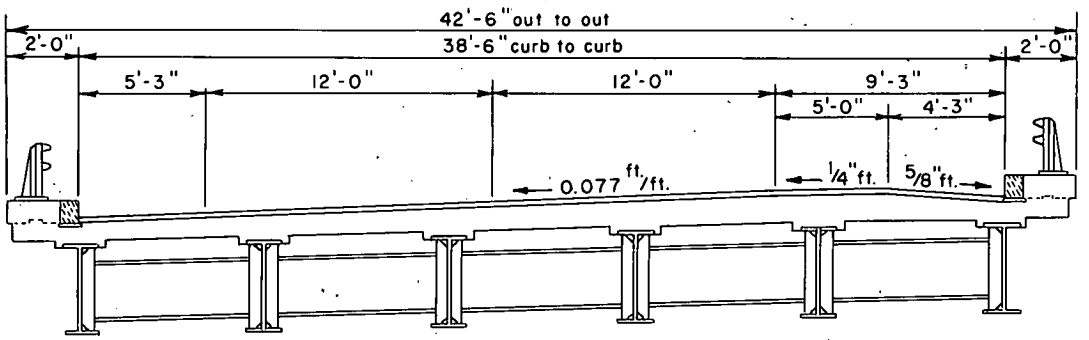

Although there is strong support for salt use to provide safe travel conditions following winter storms, heavy and needless seasoning with salt does not preserve bridges like it does many food products.

Several states have recently issued new design instructions adopting these basic recommendations and the Federal Highway Administration is becoming interested in this issue. All highway agencies in the nation's snow belt should implement these new design standards immediately.

A desirable remedy to many problems would be "getting back to basics" by keeping as many bridges on tangent sections as possible. In rural areas this can be more readily accomplished. High property values and other major control points in urban and suburban areas justify bridges on curves, but the ramifications must be considered.

Additional width of bridges would allow snow to be plowed onto the shoulder for temporary storage without the danger of pushing it onto pavements below. Such widening would also accommodate traffic more readily when deck replacement or other maintenance activity on bridges requiring lane closure is performed.

Channelized Intersections

Channelization creates many problems for maintenance forces during and following snow storms. Considerable non-productive dead heading occurs to return to clear slip ramps unless dangerous backing movements are attempted. Often plow operators are tempted to back up a hundred feet or so to avoid a trip of several miles to return. Unfortunately, the temptation is great and frequently plow units back into vehicles in the blind spot directly behind creating further delay and expense.

Many of the raised islands are definitely obstacles during a blizzard condition and periods of drifting, even if well marked with winter delineation.

These same barriers, whether directional, for lane separation or merely provided for placement of traffic control devices, contribute to sheet icing of adjacent pavements long after the storm is over unless proper grading and adequate drainage structures or systems are provided during the construction or subsequent improvement. All too often these improvements must be made by maintenance personnel at great expense for the highway organization, disruption to highway users, and criticism from the public.

Median Crossovers

Additional deadheading results from the lack of or improperly located median crossovers for use by snow removal equipment and emergency vehicles. In rural areas the use of crossovers can be used in a relatively safe manner, however, urban sections require special attention due to restrictions on right of way width, median barrier systems, the complexities of design, and safety considerations.

Medians and Gore Areas

Certainly in rural areas where wide median separation between opposing lanes is provided, drainage can be easily controlled with depressed medians and drainage systems. Likewise gore areas between mainline and ramps can be depressed and graded to facilitate drainage during periods of snow melt to prevent pavement icing on the mainline and ramps.

However, where narrow medians, with or without barriers, are required such as in urban areas and some mountainous terrain, the median is usually higher than the adjoining pavements (as shown in Figure 3) contributing significantly to the snow melt problem. The development of slotted culverts has offered a partial method in disposing of median snow melt, however, heavy frozen snow prevents capturing all run-off in the concept shown in Figure 4. Perhaps installation of slotted culverts along the pavement adjacent to the median barrier may provide a better solution although lack of cover and use of abrasives may involve expensive maintenance. By double crowning both pavements and installing ample drainage facilities as shown in Figure 5, a far safer highway can and should be provided with standard maintenance.

Interchanges

The complexities of directional type interchanges as well as interchanges of the non-standard variety (other than clover leaf, diamond, etc.) contribute to extra dead heading and extra equipment requirements. The complex elevated interchanges in urban and congested areas present especially difficult problems for winter maintenance operations as the result of narrow rights of way, superelevation, and transportation facilities and occupancy beneath them. (1)

Appurtenances

Guard rail, bridge rails, signing, delineation, and other elevated appurtenances can cause drifting and limit snow storage. Unfortunately, there are no simple solutions to many of these problems. The general discontinuance of cable guard rail by solid W-section beam rail has created many snow fences, although elevated highways with flatter slopes in recent years have been very helpful in reducing drifts and hopefully a high profile will continue to be used for this purpose. The opportunity for rectifying these problems offers a considerable challenge.

Despite many substantial improvements in recent years, even today many maintenance people will readily agree with a statement that appeared in one of the first maintenance studies back in the early sixties which stated: "From the beginning of highway maintenance, its heritage has included taking care of problems unknowingly and neglectfully perpetuated by design and construction engineers." (2)

In so agreeing, however, maintenance people are indicting themselves for failing to sound the alarm as well as design and construction people in perpetuating errors.

How can maintenance engineers impress upon designers to become aware of snow and ice control problems and implement designs to eliminate, or at least substantially alleviate, these problems? It's a difficult task, but not insurmountable. We cannot sit back and remain silent. Perseverance and imagination will be necessary. The establishment of an understanding must be instilled in the highway field and within our own organizations of the existence and magnitude of maintenance problems, and an atmosphere developed whereby our recommendations are given greater consideration.

Such an undertaking requires a diplomatic approach, but in the interest of safety and minimizing the cost of operations and costly premature reconstruction, the need to work toward such a goal is mandatory.

Although a thorough training program for young engineers exposing them to all major phases of highway engineering including maintenance would be most desirable, such a method would take considerable time and may not be attainable in many organizations. It is therefore suggested that maintenance input be brought into the pre-design stage by whatever methods will accomplish the objective. Post construction reviews with design and construction personnel can be used to point out deficiencies and problems which hopefully will be recognized and corrected in future designs. (3)

Invitations to designers to accompany plow operators from the initial call for a storm to the final clean up, seminars including training films, etc. can be used to produce desired results. Take the chief bridge and road design engineers for a ride on a beautiful early spring day and show them the melting snow windrows producing wet pavements and the salting and sanding crews treating the wet areas in the late afternoon to prevent sheet icing after the sun sets.

Figure 3

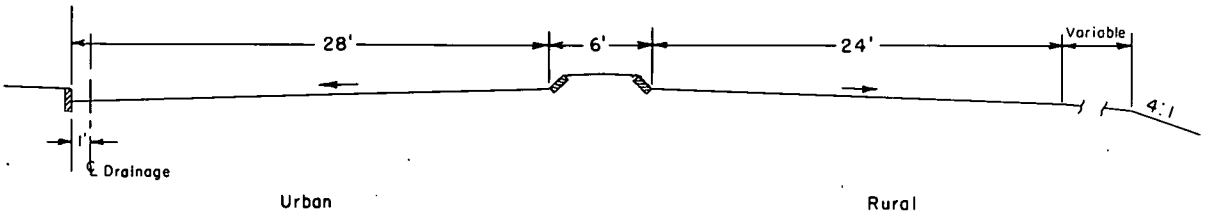

Figure 4

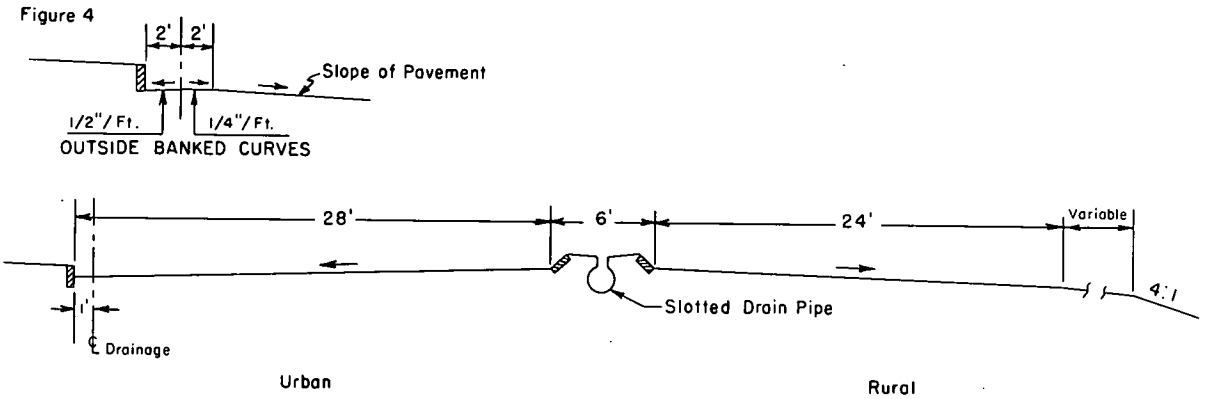

Figure 5

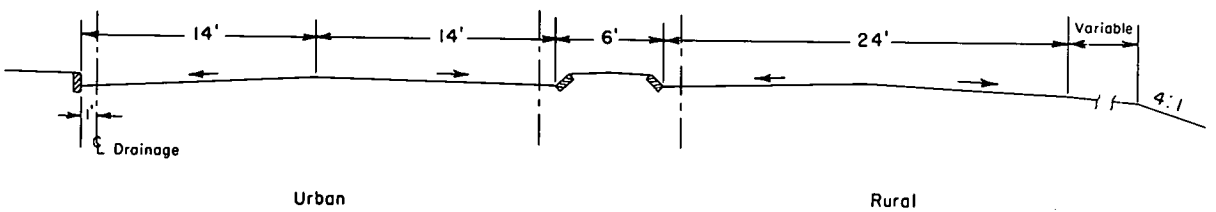

In any event a sincere and conserted attempt should be made to optimize the maintenance effort by initiating all highway personnel, administrators through laborers, and obtaining their assistance in achieving the safest highway systems that authorized funding will allow.

In any procedure adopted, what should be our objective as maintenance people? The first is obvious; the adoption of designs to provide safety and long life with a minimum of maintenance and of construction procedures that insure the attainment of design objective and preclude early failure of components. The second, and not so obvious and perhaps more difficult of attainment, is the inclusion of positive aids to maintenance. Some of the items that have been suggested previously include improving cross section on bridges, provision of crossovers on limited access sections for maintenance as well as police and emergency vehicles, the provision of access to all portions of interchanges to permit full utilization of equipment, the provision of parking spaces for maintenance equipment on long structures with movable spans to eliminate blocking lanes, the provision of adequate widths in medians with barriers requiring maintenance so equipment can be parked clear of traffic lanes and numerous others. In general urban projects require particular attention since it is in these areas where many of the special problems arise due to restrictions on right of way widths and complexities of design and it is here that maintenance is difficult and costly to perform due to high traffic volumes.

In summary, we need to establish positive channels with design and construction people so that the problems being encountered by maintenance can be brought to their attention in a climate of understanding that will insure consideration of these problems by the other divisions. Of the methods currently being used, post-construction review appears the most functional approach and it should work best when an adequate check list is used to insure consideration of all components of the completed facility.

Today the name of the game is to achieve high skid resistance. To achieve the highest possible skid resistance following a winter storm is to obtain a bare dry pavement as quickly as possible following cessation of each storm.

With sovereign immunity becoming a historic memory in many states, legal actions against governmental agencies rapidly are gaining in popularity and courts are awarding large settlements thereby further promoting perpetuation of this cycle, it behooves all highway officials to recognize the implications of the snow melt and other maintenance problems and take appropriate actions to rectify them in the planning, design and construction phases.

References

1. L. G. Byrd. Snow Removal and Ice Control Techniques at Interchanges. NHCRP, Report 127, 1971.

2. AASHO Committee on Maintenance and Equipment. Report by Subcommittee on the Practices of Design and Construction as to their Effects on Maintenance, 1966.

3. Robert W. Sweet. How Design Helps Maintenance. American Highway Magazine, April 1964, p. 7.