Models for Freeway Corridor Analysis

ADOLF D. MAY

This paper has two major themes: (a) to describe existing traffic simulation models and their applications in freeway corridor analysis and (b) to demonstrate the need for integration of research, education, and implementation activities as a key for the enhancement of simulation modeling practice. The overall objective of this paper is to provide a state-of-the-art document on freeway corridor models and to encourage researchers and practitioners to work closer together in simulation modeling. The paper also includes an extensive bibliography, which is an attempt to include all published papers that describe the development and application of available freeway corridor models.

FREEWAY CORRIDOR MODELS

After a brief review of earlier models for freeway corridor analysis, five families of currently available models are described. Particular emphasis is given to the historical development of the models and to real-life applications. The five families of models are CORQ, FREQ, INTRAS, MACK, and SCOT.

Early Models

Hsu and Munjal provide a good starting point for this paper with their paper on freeway digital simulation models (1). Their paper identified and reviewed 15 simulation models associated with various aspects of freeway vehicular traffic, and the models are compared against a baseline of eight desirable model features. Space here does not permit a description of these 15 models and the reader is referred to the Hsu-Munjal paper. The identified models were

1. Arizona Transportation and Traffic Institute Traffic Simulation Model (2),
2. Midwest Research Institute Freeway Simulation Model (3,4),
3. Midwest Research Institute Mountainous Terrain Model (5),
4. Northwestern University Lane-Changing Model (6),
5. Sinha Freeway Simulation Model (7,8),
6. Connecticut Department of Transportation Expressway Simulation Model (9),
7. Texas Transportation Institute Freeway Merging Model (10),
8. System Development Corporation Diamond Interchange Model (11),
9. System Development Corporation Freeway Simulation Model (12),
10. Mikhalkin Freeway Simulation Model (13),
11. Georgia Model (15),
12. SCOT Corridor Model (14,16-18),
13. Priority Lane Model (19,20),
14. Aggregate Variable Models (21), and
15. Aerospace Corporation Freeway Simulation Model (22).

These earlier models in many cases were forerunners of later models described in the following sections. For example, Lieberman and Bullen used model 4 in the development of the INTRAS model, while model 12 was the early version in the SCOT model family. Model 13 was an early priority-lane version in the FREQ model family, and model 14 was the early version in the MACK model family.

The CORQ-CORCON Model Family

The CORQ model developed by Yagar during the period 1969-1976 and the related CORCON model developed by Easa and Allen during the period 1971-1978 are the two models in this model family. In addition to their development, these models have been applied in Ottawa, San Francisco, and Toronto by the developers. An illustration of the chronological development of the CORQ-CORCON family of models is shown in Figure 1.

Yagar began work on the CORQ model as part of his dissertation at the University of California (23). He incorporated dynamic traffic assignment and queuing in order to model the time-varying nature of peak demands (24). By 1972, the CORQ model was completed. Incorporated in it were a number of traffic-specific factors such as the sharing of capacity at the merge of an on-ramp and freeway. In 1972-1973, it was applied to the eastbound corridor serving Ottawa for the morning peak period (25). The most comprehensive description of the current CORQ model is contained in Yagar (26). Descriptions of the assignment procedure model summary (27,28) and some required theoretical modeling details have also been published.

The CORQ model predicts flows and queues in a road corridor and combines the techniques of dynamic traffic assignment, emulation of queue spillback, ramp control strategies, combines iterative and incremental assignment, and determination of mutually dependent capacities (29).

The CORQ model was applied in two geographic areas and results have been published. A number of strategies for staggered work-hour programs were tested in selected corridors in San Francisco and

Figure 1. Chronological development and application of CORQ/CORCON model family.

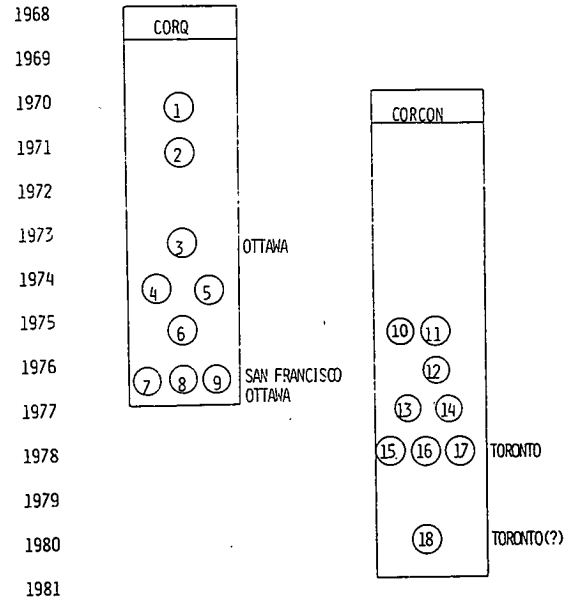

Ottawa (30). The effects of these staggered work-hour strategies were evaluated with the CORQ model, and potential savings in total travel time were predicted. The model was also applied to a portion of the Ottawa Queensway Corridor to predict the effects of some alternative traffic control schemes designed to relieve congested conditions (31). Strategies tested included off-ramp closures that had the greatest single effect on total network travel time.

Turning to the second model in this family, the CORCON model, Easa began work on the model as part of his thesis at McMaster University (32). During the period 1976-1978, Easa and Allen added several modifications to the model and applied the modified version to a freeway corridor (33-38).

The CORCON model is an analytical procedure for predicting traffic volumes, queuing conditions, and travel times in a freeway corridor. Traffic demand can vary over time and is assigned to a freeway and surrounding arterial street network. The minimum path algorithm can incorporate turn prohibitions. A major characteristic of the CORCON model is its link-node representation that simplifies network representation by allowing more than one directional roadway link to have common upstream and downstream nodes and automatically avoid illogical paths in the network.

The CORCON model was applied to Queen Elizabeth Way freeway corridor in southwest Toronto in order to predict traffic operating characteristics in the corridor network before and after entry control. A significant data collection-reduction and model calibration-validation effort was undertaken. The diversion parameter and the origin-destination (O-D) demand patterns were calibrated for the after-control period, and the CORCON procedure was validated by comparing the predicted and the observed conditions for the before control period. It was reported that the CORCON model would soon be used to assess the impact of a proposed freeway control project on the Highway 401 bypass route in metropolitan Toronto (38). A more detailed discussion of the use of the CORCON model for evaluating TSM-type strategies has been published (39). A 1980 report noted that a project was under way (1979-1981) to apply the CORCON model (and FREQ and FREFLO models) to problems in freeway corridor traffic management (40).

The FREQ Model Family

Demand-supply modeling efforts for freeway corridor operating environments were initiated in 1968 at the University of California when a California Department of Transportation (Caltrans) research project required the evaluation of alternatives for improving 140 miles of the existing San Francisco Bay Area freeway system. The system was too extensive and the alternative improvements too numerous to consider manual analysis. This first model called FREQ or FREQ1 was developed and was a forerunner of a family of models that now have reached a seventh-level version (41). An illustration of the chronological development of the FREQ model family is shown in Figure 2.

The FREQ2 and FREQ3 models were extensions and refinements of the earlier model, with particular attention being directed to shock-wave analysis, computer efficiency, and output format (42,43). The PRIFRE model was developed for the evaluation of priority lanes on freeways (44).

By the early 1970s, the need for decision models, those that incorporated simulation and optimization submodels, was recognized. Three models in this family were developed (FREQ3CP, FREQ3D, and FREQ3C) and incorporated priority entry control, design improvement, and normal entry control optimization submodels, respectively (45-47). An on-line version of the FREQ3C model was developed and called the FRESCOT model (48). One of the significant results of this work was the development of a technique for generating synthetic O-D tables from on-ramp and off-ramp counts.

As the modeling effort continued, greater attention was given to the surrounding street system (CORQ1C model) (49), impact assessment (FREQ4CP model) (50), and traveler demand responses (FREQ5CP and FREQ6T models) (51,52). The most recently developed FREQ models in use today are the FREQ6PE and FREQ6PL models (52,53). The FREQ7PE model is undergoing final testing and is planned for distribution in 1981 (54).

The FREQ6PE model is a macroscopic decision model of a freeway corridor and is used primarily for the evaluation of priority entry and normal entry control on a directional freeway (52). The model can also be used for evaluating design improvements with or without freeway entry control. The model predicts a time stream of impacts and traveler responses due to the interaction between ramp control strategy and traveler responses. The impact assessment includes travel time, fuel, emissions, and noise; demand forecasting includes spatial and modal traveler responses in increments during the first year of operation.

The FREQ6PL model is a macroscopic model of a freeway corridor and used primarily for the evaluation of reserving lane(s) on freeways for carpools and/or buses (53). The model can also be used for evaluating design improvements with or without priority operation. The user selects the priority lane(s), design configuration, priority cut-off level, and time duration of priority operations. The model automatically modifies the demand and supply sides of the model and predicts a time stream of impacts and traveler responses. The impact assessment includes travel time, fuel, emissions, and facility costs; demand forecasting also includes spatial and modal traveler responses in increments during the first year of operation.

Figure 2. Chronological development and applications of FREQ model family.

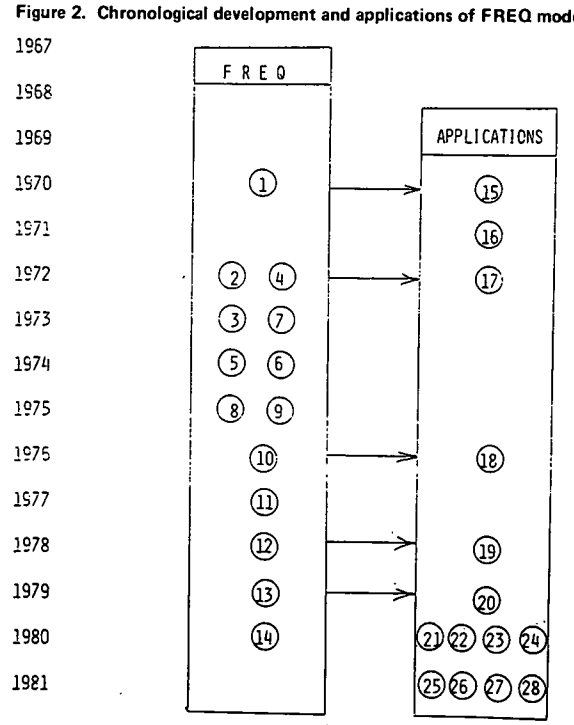

Table 1. Selected examples of FREQ model applications.

Year	Principal Investigator	Description	Site	FREQ Model	Description	Ref. No.
1970	Allen	University of California	Oakland Bay Bridge	3	Evaluate design and control alternatives	55
1971	Aidoo	University of California	I-80, Berkeley	3	Evaluate design and control alternatives	56
1972	Capelle	Voorhees	I-90, Cleveland	PRIFRE	Determine feasibility of priority lanes	57
1976	Gabard	French government	Nord RTE, Paris	3C	Evaluation of access control	58
1978	Ritch	Texas A&M	I-10, Houston	3CP	Projected future operations improvements	59
1978	English	Texas Department of Transportation	US59, Houston	3CP	Compared operations and design improvements	60
1979	Schneider	University of Washington	I-80, Berkeley	GRAF	Developed graphical output	61
1980	Michalopoulos	University of Minnesota	I-394, Minneapolis	6PE/6PL	Design and control strategy evaluation	62
1980	Immers	Delft University	A-12, Hague	4CP	Measured impacts of design and operations	63
1980	White	New Zealand government	North Freeway, Auckland	3CP	Develop and evaluate ramp control plan	64
1980	Anderson	CALTRANS	I-10, Los Angeles	6PE	Estimated metering impacts on city streets	65
1981	Torres	JFT Associates	RTE 11, Los Angeles	6PE/6PL	Evaluated fuel conservation stretegies	69
1981	Meyer	Colorado Department of Transportation	I-25, Denver	6PE	Analysis of optimized metering and geometrics	66
1981	Howard	Bartholomew	I-95, Miami	6PE/6PL	Evaluated feasibility of TSM techniques	67
1981	Deakin	Lockner	I-95, Miami	6PE	Determined feasibility of ramp metering	67
1981	Berg	Parsons	I-5, Seattle	6PE	Evaluation of TSM-type strategies	68
1981	O'Neill	Washington Department of Transportation	I-495, Seattle	6PE/6PL	Priority lane evaluation	68

Figure 3. Chronological development and applications of INTRAS model.

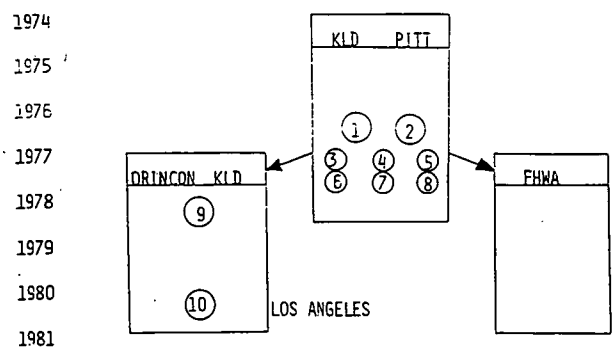

The FREQ models have been applied by a number of investigators analyzing freeway corridor traffic. Time and space limitations permit only the presentation of a sample of model applications and then only a brief description of highlights of selected applications. These applications are identified and described in Table 1.

The INTRAS Model

The INTRAS model is a stochastic, microscopic model especially developed for studying freeway incidents. INTRAS stands for INtegrated TRAffic Simulation and is a vehicle-specific time-stepping simulation designed to realistically represent traffic and traffic control in a freeway and surrounding surface street environment. The model development and/or applications have occurred in at least four organizations since work began in 1975. An illustration of the chronological development and application of the INTRAS model is shown in Figure 3 and the following description is keyed to this illustration.

A program of major emphasis was undertaken by FHWA that included the design, programming, calibration, validation, and demonstration of a computer simulation model for the evaluation of incident detection strategies. The project had six major tasks and included the adaptation of the UTCS-1 network simulation model for freeway applications, validation of candidate components, programming the simulation model, validation and refinement of the simulation model, validation of incident detection algorithms, and application of the simulation model.

Four interim reports were prepared (70-73). At the end of the project in mid-1977, a final report in four volumes was submitted to FHWA (74-77). The four volumes dealt with program design, parameter calibration and freeway dynamics component development (74); users manual (75); validation and application (76); and program documentation (77).

Two parallel activities have been undertaken since 1977 with the INTRAS model. FHWA staff have been reviewing the submitted project reports and have undertaken a series of investigations with the INTRAS model in anticipation that it will be released soon to operating agencies. The other activity is one undertaken by the ORINCON Corporation in which both the INTRAS and MACK models were used to evaluate freeway ramp control strategies under incident situations.

The ORINCON study for FHWA was undertaken during 1978-1980 and KLD Associates was the subcontractor responsible for production runs with the INTRAS model. ORINCON Corporation prepared an initial report (78) that compared the INTRAS and MACK models and then a final report (79) that described the project including the use of the INTRAS model.

The MACK Model Family

The MACK model and its later versions are deterministic, macroscopic models that basically consist of a set of conservation equations and a corresponding set of dynamic speed-density equations. Payne and associates began work in the late 1960s and models in this family include MACK I, MACK II, MACK III, FREFLO, and TRAFLO. The model development and/or application have occurred in at least 10 organizations. An illustration of the chronological development and application of the MACK model family is shown in Figure 4 and the following description is keyed to this illustration.

The MACK I model was developed at the University of Southern California and applied to the Hollywood Freeway in Los Angeles for evaluation of ramp control under incident and recurring congestion conditions (80-85). Detailed instructions for its use and an indication of its capabilities were well documented (86).

The MACK II model was developed at ORINCON and was compared with the INTRAS model (87,88). A new equilibrium speed-density relationship and a structural change in the dynamic-speed relationship that involved the parameters were introduced. The MACK II and INTRAS models were applied to a segment of the Shirley Highway with incident-free and incident

Figure 4. Chronological development and applications of MACK model family.

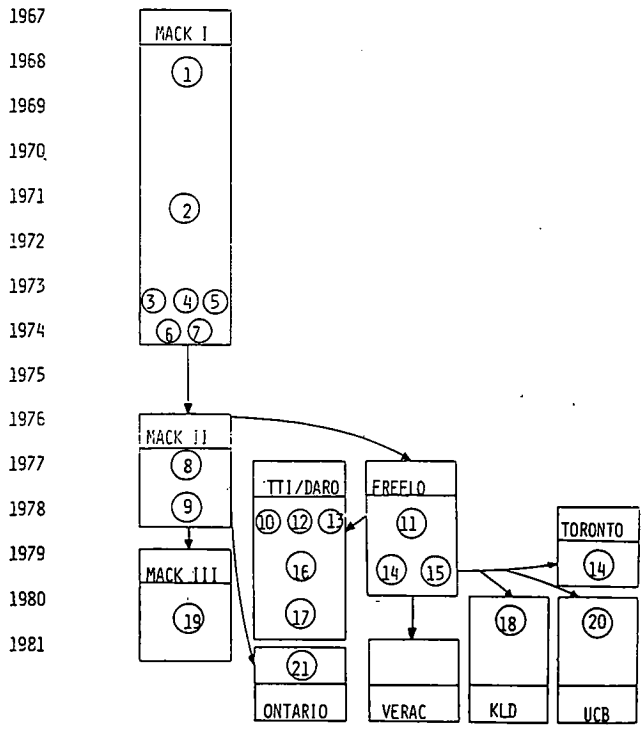

scenarios. The authors recommended that MACK II be adopted for the purpose of making preliminary evaluations of control strategies for responding to incidents based on the qualitative agreement between MACK II and INTRAS results and the 100-fold cost factor between execution of the MACK and INTRAS models.

The FREFLO model was developed by Payne at ESSCOR and was a successor to the MACK II model. The FREFLO model was designed to provide a basic model, perform input data diagnostics, represent incidents, model on-ramps, control time of day, represent surveillance, represent two traffic-responsive metering schemes, provide standard measures of travel and travel time, include fuel consumption, and include pollution emissions (93). A user's guide and program documentation were prepared (90). The last published paper by Payne about the FREFLO model was a review of the model with particular attention given to critical modeling issues that significantly affect the functioning of the model or that are otherwise of interest and have yet to be explored (94). Further investigation was proposed and included the form of the continuum model, parameter values for v and T, explanation of roll waves, congestion phenomena, modeling of merge areas, and equilibrium speed-density relationships.

A continuation of an earlier NCHRP project, entitled Guidelines for Design and Operation of Ramp Control Systems, was initiated in 1977 and a final report draft was prepared in January 1980 (96). The major objective of the study was to prepare specific guidelines for determining the feasibility of ramp control and, if feasible, to identify which mode of ramp control is appropriate: pretimed, local actuated, or system. The initial research plan called for the determination of the incremented benefits of the various control models from successive field trials of each mode at selected freeway sites. After due consideration, it was determined that the use of a freeway simulation model provided the best research approach. The FREFLO model was selected and 153 simulation runs were used. Numerous technical memoranda were prepared and include plans for simulation runs (89), MACK acceptance tests (91), FREFLO acceptance tests (92), and FREFLO baseline scenarios (95).

Koble continued the work of Payne at ORINCON in using the MACK model (unofficially called MACK III) and the INTRAS model to evaluate freeway ramp control strategies under incident situations. The project was sponsored by FHWA and began in early 1978; a final report was submitted in April 1980 (98). The MACK III model was modified to handle incidents and simulate a variety of ramp control strategies. Several hundred simulation runs were made and the MACK III model was the key analytical tool employed along with the INTRAS model.

Hauer and Hurdle of the University of Toronto were selected as discussors of Payne's paper on the FREFLO model and their discussion and the author's closure were published at the end of the paper (93). The discussors applied the FREFLO model to a simple freeway example with no ramps and a bottleneck in the middle. They hypothesized expected traffic results. Computer outputs did not provide anticipated results. Hauer and Hurdle pointed out the difficulties encountered and speculated about possible explanations. Payne, in his closure, reviewed the previous successful uses of FREFLO and stressed the importance of selecting appropriate model parameters. Particular attention was drawn to the nominal capacity parameters and their relationship to the traditional concept of roadway capacity.

Lieberman and Andrews described the TRAFLO model, which is a software system, programmed in FORTRAN, and which consists of five component models that interface with one another to form an integrated system (97). The freeway traffic simulation model included in TRAFLO is an extension and refinement of the earlier MACK model. In addition to the refinements to the FREFLO model described earlier, another extension allows buses, carpools, automobiles, and trucks to be distinguishable as three vehicle types. As of 1980, the TRAFLO program had been completed and was undergoing in-house testing by FHWA personnel.

The Institute of Transportation Studies, under sponsorship of the Caltrans with the cooperation of FHWA, began an on-line freeway entry control research project in late 1979. The project consists of two phases. In phase I, selected control strategies are to be evaluated through the use of a freeway simulation model applied to a specific site. In phase II, the most promising control strategies are to be evaluated in the field at the specific site. The first working paper was directed toward the selection of site, model, and candidate strategies (99). The FREFLO model was selected for use in this project because of the dynamic nature of the model and the anticipated short control intervals. The FREFLO model has been modified to simulate more realistically congested flow conditions, to enhance user ease in interpreting model outputs, and to permit the evaluation of fixed-time, local-responsive, system-responsive control, and other control strategies. A phase I report is expected in 1981.

Derzko, Ugge, and Case prepared an informal paper in which they reported the evaluation of two dynamic freeway flow models by using field data from the Queen Elizabeth Way in Ontario, Canada (100). The MACK II model and one of Phillips kinetic models were the two dynamic models evaluated. The preliminary results of their investigation indicated the models both exhibited instabilities in their behavior and did not track their real road data correctly.

Work with the FREFLO model continues on at least

Figure 5. Chronological development and applications of SCOT model family.

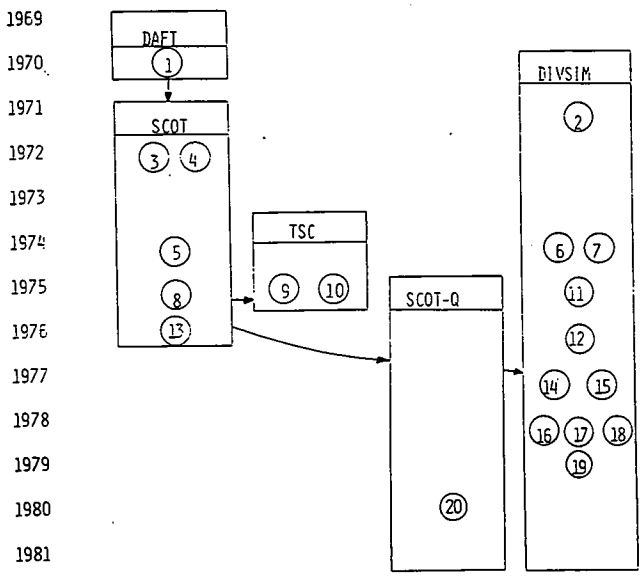

three fronts. The FREFLO model will continue to be an integral part of the TRAFLO model system. The Institute of Transportation Studies continues its freeway entry control project and is using a model based on the FREFLO model. And finally, Payne at VERAC is currently under contract to FHWA to calibrate, validate, and refine as necessary the FREFLO model.

The SCOT Model Family

For purposes of this paper, the DAFT, SCOT, SCOT-Q, and DIVSIM models are classified as members of the SCOT family of models. Work began in this modeling effort in the late 1960s and continues today. The initial work on this family of models was undertaken by Lieberman and associates at KLD. Researchers at Sperry also worked on this family of models and recently integrated the more advanced SCOT-Q model into their DIVSIM model. The following highlights the development and applications of this family of models (see Figure 5).

The DAFT model was the first model developed in this family and is a macroscopic simulation of traffic along a network of freeways, ramps, and arteries. Lieberman developed this model and first applied it to a portion of the Central Expressway north of Dallas (101). In the model the vehicles are grouped into platoons and move along the freeway according to a specified speed-density relation. Along the nonfreeway links, the platoons travel at specified free-flow speed and are delayed at the downstream end of links based on g/c ratios and approach volumes. Input data include O-D demands that may vary with time. The model includes a minimum travel cost algorithm and hence produces a dynamic assignment of traffic as a by-product of the simulation.

Lieberman and associates then created the SCOT model, which represented an evolutionary development based on combining the freeway portion of the previously described DAFT model and the UTCS-1 model for urban street networks (103,104). While the freeway traffic is modeled macroscopically in essentially the same manner as the DAFT model, the urban street network is modeled microscopically in essentially the same manner as the UTCS-1 model. A key design element of the SCOT model is the interface features between the macroscopic and microscopic characteristics of the two submodels. The traffic demands may be entered into the model either in the form of turning movements at each node or O-D volumes. The model was developed as a means of testing real-time control policies for an entire corridor: freeway ramps, frontage roads, and adjoining feeder and parallel arterials.

During 1973-1976, two parallel efforts were undertaken that involved the SCOT model. The first of these two efforts was undertaken by KLD and was directed toward developing user and program documentation manuals for the SCOT model. The other effort was undertaken by the Transportation Systems Center (TSC) and was directed toward the application and evaluation of the SCOT model. KLD, under contract to TSC, prepared a plan for data acquisition, data reduction, model calibration, and model validation (105). This was followed by the preparation of user and program documentation manuals (108,113).

TSC applied the SCOT model to the central business district of Minneapolis (109) and to a 1.2-mile test network of the Dallas North Central Expressway (110). In the Minneapolis application, the SCOT model was used to predict the effect on bus service and general traffic performance of implementing candidate bus priority strategies. The SCOT model was calibrated to current peak-hour traffic conditions within an urban street grid representative of the central business district of Minneapolis. In the Dallas North Central Expressway study, the SCOT model was calibrated and validated. Tests showed no significant differences between field and simulation results for the basic parameters of traffic speed, flow, and saturation. A demonstration of the O-D traffic assignment capability of the model indicated that the minimum time-path criteria used have not been conclusively shown to be the correct criteria for traffic assignment.

Sometime in 1976, a new effort was directed toward the development of the SCOT-Q model. The initial work on SCOT-Q was undertaken by KLD, which essentially adopted the SDC approach to the NETSIM portion of the SCOT model (120). A larger time-step was employed and, with some simplifying assumptions, the SCOT-Q model had a faster running time than the SCOT model for simulation. The SCOT-Q model was used by Sperry to aid in assessing the feasibility of an Integrated Motorist Information System (IMIS) for the Northern Long Island (N.Y.) corridor. Phase I (feasibility) of this FHWA-sponsored project, entitled Integrated Motorist Information System Feasibility and Design Study, was completed in 1977 (114). A series of more than 130 computer runs was made, and the SCOT-Q model reduced running time by 50 percent compared with the SCOT model.

In Phase II, Sperry developed a generalized IMIS feasibility methodology and, to validate the methodology, applied an enlarged version of the SCOT to a freeway corridor just east of downtown Los Angeles (118). The simulation was calibrated to the test corridor by using special data collected for that purpose. The enlarged SCOT model was used to test three scenarios: recurrent congestion situation without control, incident situation without control, and controlled response to minimize major congestion.

Phase III is planned to result in the final design for IMIS in the Northern Long Island Corridor.

In a parallel effort, Sperry researchers worked on a FHWA-sponsored project concerned with the development of traffic logic for freeway corridor control (116,119). This effort included development of DIVSIM, a corridor optimization program embedded in the SCOT simulation. The optimization portion of this program was termed DIVERT and is intended as

Figure 6. Educational and implementation activities with freeway corridor models.

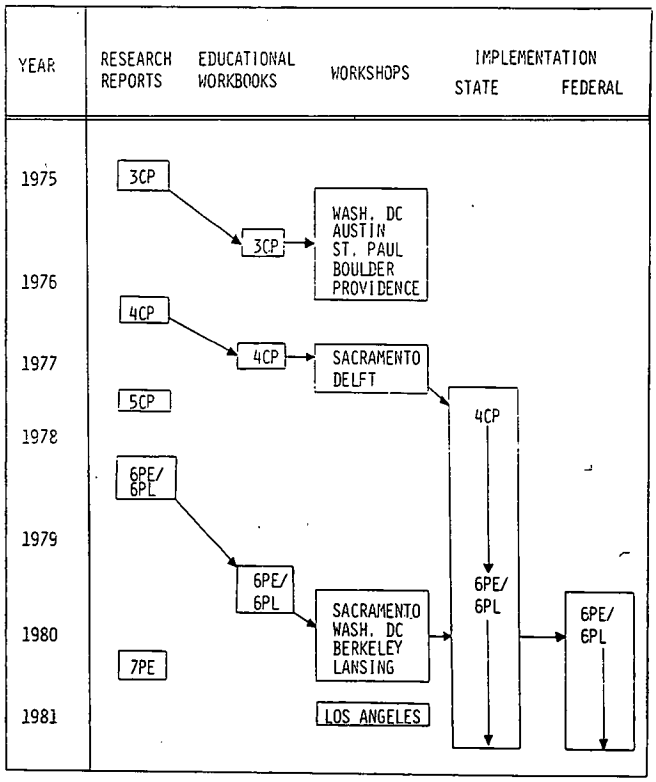

the real-time version of the DIVSIM corridor optimization algorithm.

In a parallel effort, researchers at Sperry began work on another family of models in the early 1970s when they developed a simulation model of a system that balances vehicular flow between two parallel routes through the use of real-time surveillance and variable signing control (102). The model was a hydrodynamic macroscopic model, employed shock-wave analysis, and was designed considering the type of roadway and signing in use on the New Jersey Turnpike.

Sperry researchers continued the development of this model on a FHWA-sponsored project, entitled Diversion of Intercity Traffic at a Single Point, with application to the Harbor Tunnel Thruway and I-695 Bypass Route in Baltimore. A final report (106), simulation model description (107), and several technical papers (111,112) resulted from this effort. The simulation model was named the STAR model and provided a multiple roadway-freeway simulation capability. It essentially consisted of two major components: a hydrodynamic traffic flow model and a traffic diversion model. The resulting optimized policies have been incorporated into the design for a practical real-time alternate routing system applicable to the Baltimore site.

THE NEW FRONTIER--MODEL APPLICATIONS

Greater use of existing simulation models and the relevant development of future simulation models require a major educational and implementation support effort today. The developers of simulation models have an important role to play, in fact a major responsibility for such activities. As Lieberman has pointed out, "While the development of simulation models can hardly be considered an activity which has reached its full potential, we are nevertheless making a transition from a period of intensive model development to one of intensive application" (121). This section describes the educational and implementation support effort undertaken in regard to the FREQ family of models. The purpose is to demonstrate the need for such efforts and to encourage others to become involved with similar efforts with this and other freeway corridor models. Such educational and implementation activities are shown in Figure 6.

Limited educational and implementation support activities with the FREQ model were undertaken before 1975. The model had been applied by the developers and had been used by a consultant in one research effort concerned with establishing guidelines for priority lanes on freeways. Almost all effort was devoted to extending and refining the model, and there was little interest shown by others in using the model.

By 1975, the FREQ3CP model had been developed with sponsorship from FHWA. At the same time, there was a growing awareness to encourage travel by carpool and bus by preferential treatment on highway facilities. Because of this awareness, the model's capabilities, and the recognition for training, FHWA sponsored the development of a FREQ3CP instructor and student workbook (122), the conduct of five workshops, and the distribution of computer program and sample input-output listings.

The FREQ3CP model became a part of the FHWA's BACKPAC computer program system and, while formal implementation support for the model was not available, these workshops stimulated extensive model use in several cities including Houston, Minneapolis, Boston, and Denver. In late 1976, the FREQ4CP program became available and a new workbook was prepared (123).

The FREQ model developers and Caltrans recognized a need for implementation support beyond the workshop and entered into an agreement in which Caltrans professionals could continuously seek advice and assistance from the FREQ developers. The implementation support activities began in 1977 and have been in continuous operation since that time. Assistance includes a wide variety of activities such as

1. Placing FREQ model on Caltrans computer facilities and continuous update for use from district terminals;
2. Phone conversations to advise on preparation of input data, problems with unsuccessful runs, and interpretation of output results;
3. Review of input data sets and output results, initially through mail and now on-line through a terminal facility at the university;
4. Field visits to district offices for personal discussion with model users and brief presentations of current status of models;
5. Preparation of additional documentation for model users as users deem necessary;
6. Individual or team instruction at the university for model users on critically timed projects;
7. Formal workshops on basic theories incorporated in model and also on model usage; and
8. Extension and refinement of model due to user need and feedback.

By the beginning of 1979, the model had been applied in selected districts of the Marysville, San Francisco, Los Angeles, and San Diego areas.

In late 1978, the FREQ6PE and FREQ6PL models became available and, because they included many significant improvements over earlier versions, a series of workshops was proposed. The implementation activities continued with Caltrans with the FREQ6PE and FREQ6PL models replacing the FREQ4CP model.

Conversations began with FHWA representatives to work toward an educational and implementation support program at the national level patterned after the Caltrans experience.

The technical assistance phase began immediately after a series of workshops and was patterned after the Caltrans support activities. Inquiries on the order of 3-5 per week were received and responses varied from direct answer to computer runs on our computer facilities. Means for periodic communications with all model users were recognized and FREQ/TRANSYT bulletins were published in August 1980, December 1980, and April 1981. The bulletin is distributed to approximately 250 readers and includes responses to frequently asked questions, lists of model users, new and novel applications, and programming errors and improvements.

Three user exchange conferences were held: one for FREQ model users and two for TRANSYT model users. Both Caltrans and FHWA-sponsored implementation support projects are continuing.

In summary, attention has been drawn to the need for improved and extended simulation model application. For most successful applications, educational and implementation support activities are required. Such activities in regard to the FREQ family of models have been described. It is hoped that the results of such activities will encourage others to become involved in similar efforts.

REFERENCES

1. Y.S. Hsu and P.K. Munjal. Freeway Digital Simulation Models. TRB, Transportation Research Record 509, 1974, pp. 24-41.
2. R.M. Richard, R.L. Baker, and W.P. Sheldon. Simulation of Traffic Flow as a Basis for Interchange Design. Arizona Transportation and Traffic Institute, Final Rept., June 1965.
3. D.R. Kobett. A Digital Simulation Model of Freeway Traffic: Volume 1, Model Description. Midwest Research Institute, Final Rept., Dec. 1968.
4. D.R. Kobett and S.L. Levy. Study of Expressway Traffic Flow Through Digital Simulation. Midwest Research Institute, Final Rept., May 1965.
5. A.D. St. John, D.R. Kobett, D. Sommerville, and W.D. Colanz. Traffic Simulation for the Design of Uniform Service Roads in Mountainous Terrain: Volumes I-IV. Midwest Research Institute, Final Rept., May 1970.
6. R.D. Worrall and A.G.R. Bullen. Lane-Changing on Multi-Lane Highways. Northwestern Univ., Evanston, IL, Final Rept., Aug. 1969.
7. K.C. Sinha. The Development of a Digital Simulator for the Analysis of Freeway Traffic Phenomena. Univ. of Connecticut, Ph.D. dissertation, 1969.
8. K.C. Sinha and R.F. Dawson. The Development and Validation of a Freeway Traffic Simulator. HRB, Highway Research Record 308, 1970, pp. 34-47.
9. S.D. Leland. A General Traffic Flow Simulation Model for Freeway Operation. Connecticut Department of Transportation, Wethersfield, Final Rept., May 1970.
10. J.H. Buhr, T.C. Meserold, and D.R. Drew. A Digital Simulation Program of a Section of Freeway with Entrance and Exit Ramps. HRB, Highway Research Record 230, 1968, pp. 15-31.
11. J.A. Nemeczky and B.D. Widdice. Development and Validation of a Digital Simulation Model for Research in Geometric Design and Control of Diamond Interchanges. Proc., Summer Simulation Conference, ACM/SHARE/SCI, 1970.
12. P. Warnshuis. Simulation of Traffic Flows Through Interchange Systems of Arbitrary Configuration. System Development Corp., March 1972.
13. B. Mikhalkin. Estimation of Roadway Behavior Using Occupancy Detectors. Univ. of Southern California, Ph.D. dissertation, Feb. 1971.
14. D. Gazis, R. Herman, and R. Rothery. Non-Linear Follow-the-Leader Models of Traffic Flow. Operations Research, Vol. 9, No. 4, 1961, pp. 545-567.
15. B. R. Wildermuth. Effect of Lane Placement of Truck Traffic Freeway Flow Characteristics. Wilbur Smith and Associates, April 1971.
16. D. Wicks. Traffic Flow Simulation Study: The SCOT Model, Volumes I-IV. General Applied Science Laboratories, Inc., Feb. 1972.
17. Network Flow Simulation for Urban Traffic Control System, Final Technical Report. Peat, Marwick, Mitchell, and Co.; General Applied Science Laboratories, Inc., 1971.
18. E. Lieberman. Dynamic Analysis of Freeway Corridor Traffic (DAFT). General Applied Science Laboratories, Inc., TR-744, May 1970.
19. R.C. Blankenhorn and A.D. May. FREQ2: A Revision of the "FREQ" Freeway Model. Institute of Transportation and Traffic Engineering, Univ. of California, Berkeley, Special Rept. 96, June 1972.
20. A.D. May, R.D. Minister, L.P. Lew, and K. Ovaici. A Computer Simulation Model for Evaluating Priority Operations on Freeways. Institute of Transportation and Traffic Engineering, Univ. of California, Berkeley, Special Rept. 94, June 1972.
21. H.J. Payne. Aggregate Variable Models of Freeway Traffic. Department of Electrical Engineering, Univ. of Southern California, June 1972.
22. G.W. Harju, L.R. Bush, R.F. Kramer, and H.S. Porges. An Advanced Computer Concept for Freeway Traffic Flow Modeling. Presented at Summer Simulation Conference, June 1972.
23. S. Yagar. Analysis of the Peak Period Travel in a Freeway-Arterial Corridor. University of California, Berkeley, Ph.D. dissertation, March 1970.
24. S. Yagar. Dynamic Traffic Assignment by Individual Path Minimization and Queuing. Transportation Research, Vol. 5, 1971, pp. 179-196.
25. S. Yagar. An Analysis of the Morning Peak Traffic Problems in the Eastbound Corridor Serving Ottawa. Ontario Ministry of Transportation and Communications, Canada, 1973.
26. S. Yagar. Emulation of Dynamic Equilibrium in Traffic Networks. International Symposium on Traffic Equilibrium Methods, Montreal, Nov. 1974.
27. S. Yagar. Dynamic Assignment of Time-Varying Demands to Time-Dependent Networks. Transportation Development Agency, Canada Ministry of Transport, 1974.
28. S. Yagar. CORQ--A Model for Predicting Flows and Queues in a Road Corridor. TRB, Transportation Research Record 533, 1975, pp. 77-87.
29. S. Yagar. Applications of Traffic Flow Theory in Modeling Network Operations. TRB, Transportation Research Record 567, 1976, pp. 65-69.
30. S. Yagar. Estimating Potential Benefits of Staggered Hours. Logistics and Transportation Review, Vol. 12, No. 4, 1976, pp. 251-260.
31. S. Yagar. Measures of the Sensitivity and Effectiveness of the CORQ Traffic Model. TRB, Transportation Research Record 562, 1976, pp. 38-48.

32. S.M. Easa. A Model for Investigating Traffic Assignment and Control in a Freeway Corridor. McMaster University, Hamilton, Ontario, M. engr. thesis, 1976, 169 pp.
33. B.L. Allen and C.J. Liew. Simplified Approach to Modeling Freeway Operations and Control. TRB, Transportation Research Record 533, 1975, pp. 88-96.
34. S.M. Easa and B.L. Allen. Analysis of Urban Freeway Corridors: Toward the Development of a Model for Assessing Freeway Control Plans. McMaster University, Ontario, Interim Rept. 3311-76/1, July 1976.
35. B.L. Allen and S.M. Easa. Analysis of Urban Freeway Corridors: A Corridor Model for Assessing Freeway Control Plans. McMaster University, Ontario, Final Rept. 3311-72/2, Vol. 1, March 1977.
36. B.L. Allen and S.M. Easa. Analysis of Urban Freeway Corridors: Field Validation of CORCON--A Corridor Model for Assessing Freeway Control Plans. McMaster University, Ontario, Final Rept. 3311-77/3, Vol. 2, March 1977.
37. S.M. Easa and B.L. Allen. CORCON: Freeway CORridor Assignment and CONtrol Model. TRB, Transportation Research Record 682, 1978, pp. 76-84.
38. B.L. Allen, S.M. Easa, and E.R. Case. Application of Freeway-Corridor Assignment and Control Model. TRB, Transportation Research Record 682, 1978, pp. 76-84.
39. S.M. Easa and B.L. Allen. A Technique for Evaluating TSM Strategies in Urban Areas. Presented at Annual Conference, Canadian Institute of Traffic Engineers, Calgary, Alberta, 1978.
40. Transportation R and D in Canada. Road and Transportation Association of Canada, 1980, p. 76.
41. Y. Makigami, L. Woodie, and A.D. May. Bay Area Freeway Operations Study--Final Report: Part I, The Freeway Model. Institute of Transportation and Traffic Engineering, Univ. of California, Berkeley, Aug. 1970.
42. R.C. Blankenhorn and A.D. May. Freeway Operations Study--Phase III: Interim Report No. 4-1, FREQ2--A Revision of the "FREQ" Freeway Model. Institute of Transportation and Traffic Engineering, Univ. of California, Berkeley, June 1972.
43. W.A. Stock, R.C. Blankenhorn, and A.D. May. Freeway Operations Study--Report III: Rept. 73-1, The FREQ3 Freeway Model. Institute of Transportation and Traffic Engineering, Univ. of California, Berkeley, June 1973.
44. R.D. Minister, L.P. Lew, K. Ovaici, and A.D. May. A Computer Simulation Model for Evaluating Priority Operations on Freeway. Institute of Transportation and Traffic Engineering, Univ. of California, Berkeley, June 1972.
45. K. Ovaici, A.D. May, R.F. Teal, and J.K. Ray. Simulation of Freeway Priorities Strategies (FREQ3CP), FHWA, June 1975.
46. M. Eldor and A.D. May. Freeway Operations Study--Phase III: Report 73-1, Cost-Effectiveness Evaluation of Freeway Design Alternatives. Institute of Transportation and Traffic Engineering, Univ. of California, Berkeley, June 1973.
47. J.J. Wang and A.D. May. Freeway Operations Study--Phase III: Report 73-3, Analysis of Freeway On-Ramp Control Strategies. Institute of Transportation and Traffic Engineering, Univ. of California, Berkeley, June 1973.
48. M. Eldor and A.D. May. Integrated Freeway On-Ramp Control Strategies Under Normal and Incident Conditions. U.S. Department of Transportation, March 1975.
49. M. Orthlieb and A.D. May. Freeway Operations Study--Phase IV: Report 74-5, Freeway Corridor Control Strategies. Institute of Transportation and Traffic Engineering, Univ. of California, Berkeley, Aug. 1975.
50. A.J. Kruger and A.D. May. The Analysis and Evaluation of Selected Impacts of Traffic Management Strategies on Freeways. U.S. Department of Transportation, Oct. 1976.
51. A.J. Kruger and A.D. May. Further Analysis and Evaluation of Selected Impacts of Traffic Management Strategies on Freeways. U.S. Department of Transportation, Oct. 1977.
52. P.P. Jovanis, A.D. May, and W. Yip. FREQ6PE--A Freeway Priority Entry Control Simulation Model. California Department of Transportation, Sacramento, Sept. 1978.
53. T. Cilliers, A.D. May, and R. Cooper. FREQ6PL--A Freeway Priority Lane Simulation Model. California Department of Transportation, Sacramento, Sept. 1978.
54. D.B. Roden, W. Okitsu, and A.D. May. FREQ7PE--A Freeway Corridor Simulation Model. Institute of Transportation Studies, Univ. of California, Berkeley, June 1980.
55. B.L. Allen and A.D. May. Final Report--Analytic Techniques for Evaluating Freeway Improvements: Part II of III, On the San Francisco-Oakland Bay Bridge. Institute of Transportation and Traffic Engineering, Univ. of California, Berkeley, Aug. 1970.
56. J.F. Aidoo, R.W. Goedhart, and A.D. May. Final Report--Analytic Techniques for Evaluating Freeway Improvements: Part III of III, On the Eastshore Freeway (I-80) Northbound. Institute of Transportation and Traffic Engineering, Univ. of California, Berkeley, June 1971.
57. D.G. Capelle and others. Feasibility and Evaluation Study of Reserved Freeway Lanes for Buses and Carpools. HRB, Highway Research Record 388, 1972, pp. 32-44.
58. J.F. Gabard and J.J. Henry. Controle d'acces sur autoroute--Mise en oeuvre du programme FREQ3C. Centre d'etudes et de Recherches de Toulouse, May 1976.
59. G.P. Ritch and J.L. Buffengton. Analyzing the FREQ3CP Freeway Operations Simulation Model. Texas Transportation Institute, Research Report 210-3, Oct. 1978.
60. G.H. English, H. Joiner, and W. Neyland. Traffic Study of Southwest Freeway Using the FREQ3CP Simulation Model. Texas State Department of Highways and Public Transportation, Austin, Oct. 1978.
61. J.B. Schneider, C.L. Jettie, and B.J. Lewis. FREGRAF: A Computer Graphics Aid to the Operation and Interpretation of FREQ6PE: Part 1--Overview and Experimental Results; Part 2--Users Guide; and Part 3--Programmers Guide. University of Washington, Seattle, Sept. 1979.
62. P.G. Michalopoulos and R.A. Plum. Selection and Evaluation of Optimal Freeway Design by Computer Simulation, TRB, Transportation Research Record 773, 1980, pp. 40-47.
63. L.H. Immers. Simulation of Motorway Traffic Performance. Presented at 1980 U.T.S.G. Conference, Univ. of Newcastle-upon-Tyne, Jan. 1980.
64. M.H. White. Motorway Ramp Control Evaluation Using FREQ3CP. Presented at National Roads Board Traffic Committee Meeting, April 1980.

65. D. Anderson and S. Tso. San Bernardino Freeway Corridor Study. California Department of Transportation, Sacramento, District 07 Rept., June 1980.
66. K.G. Meyer. I-25 Range Metering in Denver. Presented at FREQ Users Conference, Institute of Transportation Studies, Los Angeles, April 1981.
67. P.K. Howard and G.L. Deakin. I-95 HOV Lane Study in Florida. Presented at FREQ Users Conference, Institute of Transportation Studies, Los Angeles, April 1981.
68. B. Berg and J. O'Neill. The I-5 and I-405 Seattle Metering and Priority Lane Project. Presented at FREQ Users Conference, Institute of Transportation Studies, Los Angeles, April 1981.
69. J. Torres. Modeling Combined Ramp Metering and Priority Lane Strategies. Presented at FREQ Users Conference, Institute of Transportation Studies, Los Angeles, April 1981.
70. D.A. Wicks and E.B. Lieberman. Development and Testing of INTRAS, A Microscopic Freeway Simulation Model: Vol. I, Program Design and Parameter Calibration. NTIS, Jan. 1976.
71. A.G. Bullen and P. Athol. Development and Testing of INTRAS, A Microscopic Freeway Simulation Model: Vol. II, Freeway Micro-Simulation Component Model Development. Univ. of Pittsburgh, Final Rept., Feb. 1976.
72. C.Y. Chen and others. A Freeway Micro-Simulation to Model Incidents and High Traffic Concentrations. TRB, Transportation Research Record 640, 1977, pp. 49-52.
73. D.A. Wicks. INTRAS--A Microscopic Corridor Simulation Model. Overview of Simulation in Highway Transportation, Vol. I, 1977, pp. 95-107.
74. D.A. Wicks and E.B. Lieberman. Development and Testing of INTRAS, A Microscopic Freeway Simulation Model: Vol. 1, Progress Design, Parameter Calibration, and Freeway Dyanmics Component Development. FHWA, May 1977.
75. D.A. Wicks and E.B. Lieberman. Development and Testing of INTRAS, A Microscopic Freeway Simulation Model: Vol. 2, Users Manual. FHWA, June 1977.
76. D.A. Wicks and E.B. Lieberman. Development and Testing of INTRAS, A Microscopic Freeway Simulation Model: Vol. 3, Validation and Applications. FHWA, Aug. 1977.
77. D.A. Wicks and E.B. Lieberman. Development and Testing of INTRAS, A Microscopic Freeway Simulation Model: Vol. 4, Program Documentation. FHWA, Aug. 1977.
78. H.J. Payne and H.M. Koble. A Comparison of Macroscopic and Microscopic Simulation Models (MACK and INTRAS). Orincon Corp., Rept. OC-R-78-11-9367-1, March 1978.
79. H.M. Koble and others. Control Strategies in Response to Freeway Incidents, Washington, D.C. FHWA, April 1980.
80. H.J. Payne. Continuum Models of High Density Traffic Flow. Electronic Sciences Laboratory, Univ. of Southern California, USCEE Rept. No. 339, 1968.
81. H.J. Payne. Models of Freeway Traffic and Control. Simulation Council Proc., on Mathematical Models of Public Systems, 1971, pp. 51-61.
82. H.J. Payne, W.A. Thompson, and L. Isaksen. Design of a Traffic-Responsive Control System for a Los Angeles Freeway. IEEE Transactions on Systems, Man, and Cybernetics, Vol. SMC-3, May 1973, pp. 213-224.
83. L. Isaksen and H.J. Payne. Freeway Traffic Surveillance and Control. Proc., IEEE, Vol. 61, No. 5, May 1973, pp. 526-536.
84. L. Isaksen and H.J. Payne. Suboptional Control of Linear Systems by Augmentation with Application to Freeway Traffic Regulation. IEEE Transactions on Automatic Control, Vol. AC-18, No. 3, June 1973, pp. 210-219.
85. H.J. Payne, W.S. Meisel, and M. Teener. Ramp Control to Relieve Freeway Congestion Caused by Traffic Disturbances. HRB, Highway Research Record 469. pp. 52-64.
86. D.N. Goodwin, S.D. Miller, and J.H. Payne. MACK: A Macroscopic Simulation Model of Freeway Traffic. Technology Service Corporation, July 1974.
87. H.J. Payne and D.C. Young. MACK: A Macroscopic Simulation Model of Freeway Traffic (Version II). Orincon, La Jolla, CA, April 1977.
88. H.J. Payne and H.M. Koble. A Comparison of Macroscopic and Microscopic Simulation Models (MACK and INTRAS). Orincon Corp., March 1978.
89. D.W. Ross and J.L. Glazer. Plan for MACK (FREFLO) Simulation Runs. Daro Associates, Menlo Park, CA, NCHRP Project 3-22A Memorandum, June 1978.
90. H.J. Payne. FREFLO: A Macroscopic Simulation Model of Freeway Traffic--A Users Guide. ESSCOR, San Diego, CA, July 1978.
91. J.L. Glazer and D.W. Ross. MACK Acceptance Tests Task I Detailed Description. Daro Associates, Menlo Park, CA, NCHRP Project 3-22A Memorandum, Sept. 1978.
92. J.L. Glazer and D.W. Ross. FREFLO Acceptance Tests Task II. Daro Associates, Menlo Park, CA, NCHRP Project 3-22A Memorandum, Oct. 1978.
93. H.J. Payne. FREFLO: A Macroscopic Simulation Model of Freeway Traffic. TRB, Transportation Research Record 722, 1979, pp. 68-77.
94. H.J. Payne. A Critical Review of a Macroscopic Freeway Model. Engineering Foundation Conference, Research Directions in Computer Control of Urban Traffic Systems, Pacific Grove, CA, Feb. 1979, pp. 251-265.
95. J.L. Glazer. Description of FREFLO Baseline Scenarios. Daro Associates, Menlo Park, CA, NCHRP Project 3-22A Memorandum, March 1979.
96. C. Pinnell and others. Guidelines for Design and Operation of Ramp Control Systems--Continuation. NCHRP Project 3-22A Report, Jan. 1980.
97. E.B. Lieberman and B.J. Andrews. TRAFLO: A New Tool to Evaluate Transportation System Management Strategies. TRB, Transportation Research Record 722, 1980, pp. 9-15.
98. H.M. Koble and others. Control Strategies in Response to Freeway Incidents, Washington D.C. FHWA, April 1980.
99. Hoi Tran and others. On-Line Freeway Entry Control--Preliminary Analysis and Evaluation of Sites, Simulation Models, and Control Strategies. Institute of Transportation Studies, Univ. of California, Berkeley, Aug. 1980.
100. N.A. Derzko, A.J. Ugge, and E.R. Case. Evaluation of A Dynamic Freeway Flow Model Using Field Data. Ontario Ministry of Transportation and Communications, Canada, 1981.
101. E.G. Lieberman. Dynamic Analysis of Freeway Corridor Traffic. Presented at 1970 Joint Transportation Engineering Conference, Chicago, IL, Oct. 12-14, 1970.
102. K.W. Dodge and R.R. Reiss. Surveillance Control and Simulation for a System of Parallel Roadways. Joint Conference on Major Systems, Anaheim, CA, Oct. 1971, pp. 219-224.

103. E.B. Lieberman. Simulation of Corridor Traffic--the SCOT Model. HRB, Highway Research Record 409, 1972, pp. 34-45.
104. E.B. Lieberman and D.A. Wicks. Traffic Flow Simulation Study--The SCOT Model. GASL, Washington, DC, Tech. Rept. 769, Feb. 1972.
105. D. Wicks and J. Cohen. SCOT Model, Calibration and Validation, Data Acquisition and Reduction. KLD Associates, 1974.
106. Final Design Report--Diversion of Intercity Traffic at a Single Point. Sperry Systems Management, Sept. 1974.
107. Description of Sperry Traffic Analysis and Research (STAR) Simulation Program. Sperry Systems Management, Oct. 1974.
108. SCOT Model, User's Manual and Program Documentation--Working Document. FHWA, May 1975.
109. A. Muzyka. Bus Priority Strategies and Traffic Simulation. TRB, Special Rept. 153, 1975, pp. 39-49.
110. L. McCabe, R. Ricci, and P. Coucannon. Simulation Studies for an Urban Traffic Corridor. Transportation Systems Center, Cambridge, MA, June 1975.
111. C.R. Berger and L. Shaw. Division Control of Freeway Traffic. Presented at 6th IFAC Congress, Cambridge/Boston, MA, Aug. 1975.
112. C.R. Berger and others. Single Point Diversion of Freeway Traffic. Presented at 55th Annual Meeting, TRB, Jan. 1976.
113. SCOT Model User's Manual and Program Documentation. KLD Associates, Inc., 1976.
114. P. Zove and others. Integrated Motorist Information System Feasibility and Design Study--Phase I, Feasibility Study; Vol. 1, Final Report; Volume 2, Appendices; Volume 3, Executive Summary. Sperry Systems Management, April 1977.
115. C. Berger and L. Shaw. Discrete Event Simulation of Freeway Traffic. Sperry Systems Management, Internal Rept. (prepared after 1976).
116. Optimizing Traffic Flow in an Intercity Corridor: Volume I, Program Discussion and User Guide; Volume II, Sub-Routine Description; Volume III, SCOT Model Modification and Traffic Control; and Volume IV, Derivation of Traffic Logic. Sperry Systems Management, Jan. 1978.
117. R.A. Reiss and others. Corridor Control of Vehicular Traffic. Sperry Systems Management, Internal Rept., 1978.
118. P. Zove and C. Berger. Integrated Motorist Information System Feasibility and Design Study--Phase II: Generalized Methodology for IMIS Feasibility Studies; Volume I, IMIS Feasibility Study Handbook; Volume II, Feasibility Handbook Application. Sperry Systems Management, May 1978.
119. Traffic Logic Application Summary. Sperry Systems Management, Sept. 1979.
120. M.C. Davila and E.B. Lieberman. A Hybrid Macroscopic-Microscopic Traffic Simulation Model. Presented at 59th Annual Meeting, TRB, Jan. 1980.
121. E.B. Lieberman. Traffic Simulation: Past, Present, and Potential. Proc., International Symposium on Traffic Control Systems, Vol. 1, Resource Papers, Univ. of California, Aug. 1979, pp. 242-261.
122. M. Feldman and A.D. May. FREQ3CP Student Workbook and Instructor's Guide. FHWA, June 1976.
123. A.D. May and R. Cooper. FREQ4CP Student Workbook and Instructor's Guide. California Department of Transportation, Sacramento, March 1977.
124. V. Siu, P. Jovanis, and A.D. May. Freeway Priority Treatment Strategies Workshop Student Workbook. April 1980.

Enhanced NETSIM Program

E. Lieberman

The NETSIM traffic simulation model (1) has been applied extensively over the past seven years to a wide variety of problem areas by a large number of public and private agencies. The experience gained with NETSIM has prompted many suggestions for improving and extending the program with the view to further enhancing its value as an engineering and research tool.

In an informal survey conducted by KLD Associates a few years ago, the following suggestions were made:

1. The input preparation effort should be eased,
2. The cost of computing should be reduced,
3. Many additional features should be introduced, and
4. The output capabilities should be extended.

Interestingly, the last two suggestions conflict with the first two. Whenever additional features are introduced, some added input requirements are usually implied. Furthermore, any additional feature leads to the development of additional software that, in turn, occupies computer memory and consumes computer resources. Similarly, enhanced output capabilities imply the need to compute and to store additional data; writing output is also costly in computer time. Such conflicting user requests impose a burden on the designer to be responsive in the most cost-effective manner.

This paper describes the enhancements incorporated into the new version of NETSIM. This version constitutes the result of the first development stage of the Integrated Traffic Simulation Software System known as TRAF.

The techniques that have been applied to produce a cost-effective, enhanced version of NETSIM will also be described.

NETSIM ENHANCEMENTS

Specific NETSIM enhancements are described briefly here.

Blockers and Parkers

Blockers are defined as illegal parkers who occupy a