Chapter 6

TIEN H. WU,
WILSON H. TANG, AND
HERBERT H. EINSTEIN

LANDSLIDE HAZARD AND RISK ASSESSMENT

1. INTRODUCTION

As a general principle, the choice among different landslide management options should be based on cost. The direct or initial cost, such as cost of construction or removal; social costs; and the costs of lost opportunity and potential failures need to be considered. The choice among management options described in Chapter 5 is made under conditions of uncertainty because future events that may trigger landslides, such as rainstorms and earthquakes, cannot be forecast with certainty. Uncertainty also arises because of insufficient information about site conditions and incomplete understanding of landslide mechanisms. The uncertainties prevent accurate predictions of landslide occurrence or of the performance of physical control measures. In a broader sense, uncertainty should include the probability of success or failure of hazard-reduction measures such as avoidance and codes.

Geotechnical engineers are familiar with risk and decision making under uncertainty. The nature of risk and the need to balance safety with economy in geotechnical design were noted by Casagrande (1965) 30 years ago. A rational decision process used to choose among management options should account for the uncertainties. The concepts of decisions under uncertainty and probabilistic decision models have been well established in business management for over 30 years (e.g., Schlaifer 1959; Raiffa and Schlaifer 1961) and have been successfully applied to engineering problems (Keeney and Raiffa 1976). The basic elements of hazard and risk assessment and decision making as applied to landslide management are summarized in this chapter.

2. DESCRIPTION OF UNCERTAINTY

When there is uncertainty, the conventional approach is to make conservative estimates of the design parameters. In probabilistic analysis, the uncertainty about a variable, called a random variable, is described by a probability density function, $f(x)$ [see Figure 6-1(a)], with mean μ_x and standard deviation σ_x. The probability that the random variable x may have values between a and b is given by the shaded area. The function $f(x)$ may be obtained by fitting to data. When data are insufficient for determination of $f(x)$, it is still possible to obtain reasonable estimates of the mean and standard deviation. Opinions based on experience and judgment can be incorporated as subjective probability. Engineers frequently express their opinions in the form of a best estimate and a range. This can be conveniently described by a subjective probability that has a triangular distribution [see Figure 6-1(b)], where b represents the best estimate and a and c represent the upper and lower limits of the range. Formal methods for evaluating subjective probability were described by Winkler (1969), Brown (1974), Staël von Holstein and Matheson (1979), and Agnew (1985).

Roberds (1990) provided a review of the assessment of subjective probability.

The following sources of uncertainty are commonly encountered in geotechnical engineering. First, future loads and environmental conditions cannot be predicted with certainty. For example, the occurrence of an earthquake of a given magnitude or a given ground acceleration can only be estimated on a probabilistic basis and expressed as the probability that the acceleration will exceed a given value. Pore-water pressure and seepage forces due to future rainstorms may be treated in a similar manner.

The second source of uncertainty concerns site conditions. Spatial variability of geologic materials requires the engineer to make extrapolations from material types observed at boreholes and samples and to make inferences about material types that may exist at points where no observations are made. Such extrapolations involve a large degree of uncertainty. For example, geologic anomalies can be present at a site even though they were not detected during site exploration (Baecher 1979; Halim and Tang 1991). The persistence and location of joints in rock, which are planes of weakness, cannot be accurately determined in site exploration (Baecher et al. 1977). In addition, errors in estimating material properties are introduced when the number of samples is insufficient; when the test method does not accurately measure the property, such as the in situ strength; and when test procedures contain random errors. The above errors were reviewed and the associated uncertainties estimated by Lumb (1975), Tang et al. (1976), Baecher (1979), and Wu (1989).

Analytical models are used to predict performance of geotechnical structures. Models commonly used in landslide analysis include those for stability analysis and seepage. Analytical models contain errors, introduced through inadequacies and simplifications in theory, simplifications in boundary conditions, and approximations in numerical computations. Empirical evidence provides some rough measure of model error. Results of model tests performed to check the predictions of theory have been used to estimate model error.

Although probabilistic methods have been developed to estimate the uncertainties associated with the three sources described above, a fourth source of uncertainty, that caused by possible omissions, cannot be formally described. Omission refers to the failure by the engineer to consider possible modes of failure or factors that could affect performance. Good engineering practice should avoid omissions, although the probability of omissions is difficult to quantify.

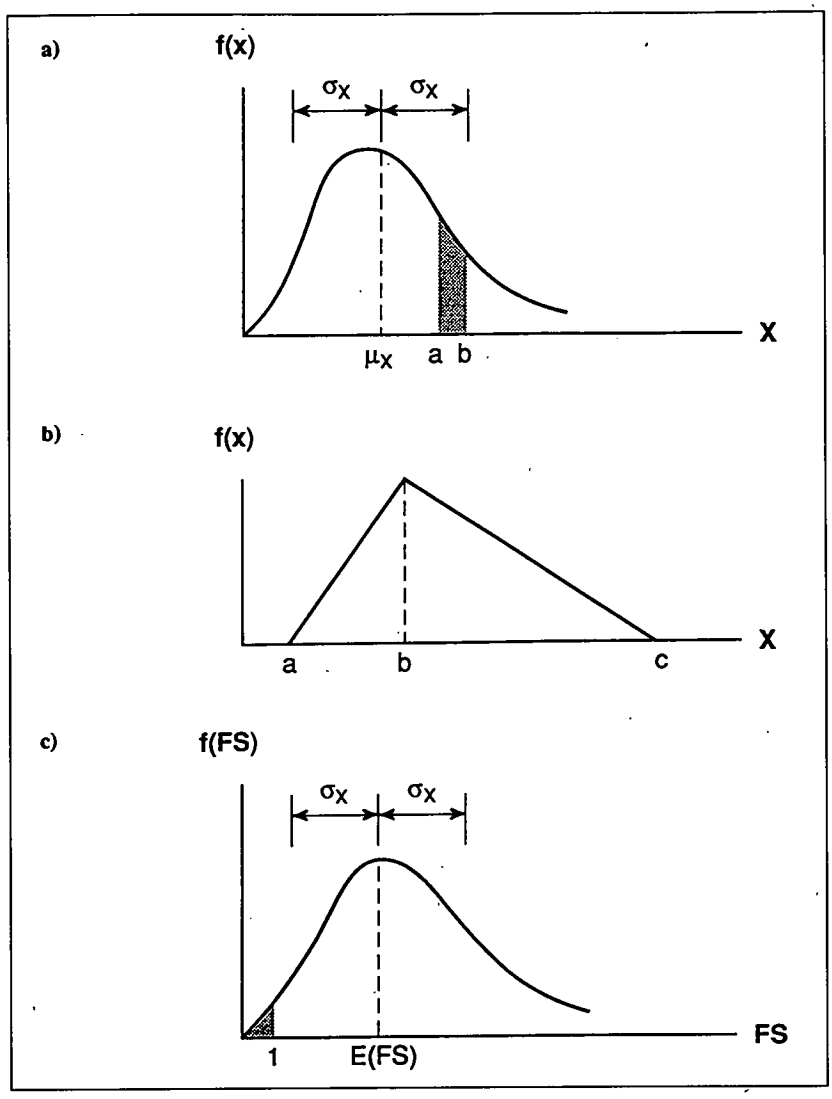

FIGURE 6-1 Probability distribution functions.

In view of the uncertainties involved in the various stages of geotechnical design, it is frequently necessary to revise estimates of site conditions and foundation performance as more information becomes available. This revision is the essence of the "observational approach" (Terzaghi 1961; Peck 1969). Updating an estimate on the basis of new observations can be modeled via Bayes' theorem:

$$P''(\theta_1|Z) = kL(Z|\theta_1)\,P'(\theta_1) \tag{6.1}$$

where

$P'(\theta_1)$ = prior probability, which is the probability that state θ is θ_1 before the new observation;

$P''(\theta_1|Z)$ = posterior probability, which is the probability that state θ is θ_1 given the observed results Z;

$L(Z|\theta_1)$ = likelihood function, which is the probability of observing the results Z given that state θ is θ_1; and

k = normalization constant, which is needed to make the sum of the probabilities over all possible θ's equal to 1.

The state θ may also be used to represent the unknown parameter, such as the mean μ of the probability distribution of a random variable. Moreover, the state θ can be a continuous random variable. In this case, the probabilities $P'(\theta_1)$ and $P''(\theta_1)$ in Equation 6.1 are replaced by the corresponding probability density functions $f'(\theta)$ and $f''(\theta)$, respectively. Bayes' theorem provides a vehicle for combining observational information with professional opinion quantified as subjective probabilities.

3. ESTIMATION OF HAZARD

Available methods for estimating hazard, defined as failure probability P_f, range from reliability analysis to purely empirical estimates. In formal reliability analysis, the performance of a geotechnical system (embankment, slope, etc.) is expressed as a function of controlling factors (precipitation, soil strength, etc.) that are considered to be random variables because their values are not precisely known. As described in Section 2, each random variable x is characterized by a probability density function, $f(x)$, with mean μ_x and standard deviation σ_x. Logically, the mean of an input should represent the engineer's best estimate of the true value without conservatism, whereas the variance σ_x^2 should represent uncertainty about the true value. Thus, the mean and variance reflect the technical expert's judgment about the uncertain variable.

To evaluate reliability, the performance of a geotechnical system may be expressed as a performance function. For example, the performance function that defines the safety of a slope could be the factor of safety, which in turn is a function of random variables that include load and strength. The probability density functions of strength, and so on, are used to derive the probability density function of the performance function, which is then used to calculate the failure probability. Thus far, this has been accomplished only for simple problems because the complexity of the various relations in the performance function makes it difficult to obtain closed-form solutions. Most solutions have used the first-order, second-moment (FOSM) method (Ang and Tang 1975).

In FOSM, Y is the performance variable, such as the safety factor. It is a function G of the random variables $X_1, X_2, \ldots, X_n$, which represent strength, . . . , or

$$Y = G(X_1, X_2, \ldots, X_n) \tag{6.2}$$

To translate means, variances, and correlations of input variables $X_1, X_2, \ldots$ to the mean and variance of the performance function, a simple linear approximation is used to obtain the following relations (Benjamin and Cornell 1970; Ang and Tang 1975):

$$\bar{Y} \cong G(\bar{X}_1, \bar{X}_2, \ldots, \bar{X}_n) \tag{6.3}$$

$$\mathrm{Var}(Y) \cong \Sigma_i \Sigma_j \left(\frac{\partial G}{\partial X_i} \frac{\partial G}{\partial X_j} \bigg|_m \right) \mathrm{Cov}(X_i, X_j) \tag{6.4}$$

where

$\bar{X}_i$ = mean or expected value of X_i,

$\mathrm{Cov}(X_i, X_j)$ = covariance of X_i and X_j, and

$\mathrm{Var}(Y)$ = variance of Y.

In Equation 6.4, $|_m$ indicates that the partial derivatives are evaluated at the mean values of X_i, X_j. When the parameters are all mutually independent, Equation 6.4 reduces to

$$\mathrm{Var}(Y) = \Sigma_i \left(\frac{\partial G}{\partial X_i} \bigg|_m \right)^2 \mathrm{Var}(X_i) \tag{6.5}$$

The simple relationships in Equations 6.2 through 6.5 may be used to estimate the mean and variance of a material property, such as strength, because of uncertainties about various input parameters and test conditions. Similarly, the mean and variance of the resistance along a potential slip surface due to uncertainty about the shear strength and other soil properties can be estimated. When the performance variable Y is the

safety factor, it is commonly assumed that the safety factor has a log-normal distribution, with mean $E(FS)$ and standard deviation σ_{FS} [see Figure 6-1(*c*)], as determined from Equations 6.2 through 6.5. It is then possible to calculate the probability that the safety factor is equal to or less than 1, which is the shaded area in Figure 6-1(*c*).

Instead of the probability of failure, the safety may be expressed by a reliability index (Hasofer and Lind 1974):

$$\beta = \frac{[E(FS) - 1]}{\sigma_{FS}} \tag{6.6}$$

The numerator of this equation is the distance along the abscissa [Figure 6-1(*c*)] that measures the difference between the mean safety factor $E(FS)$ and failure at FS = 1. This difference is equivalent to a margin of safety. When this difference is divided by σ_{FS}, the margin of safety becomes relative to the uncertainty about the safety factor. Thus, β is a measure of safety while taking into account the magnitude of the uncertainties involved. Clearly, when the uncertainty is large, larger safety factors are necessary to maintain the same level of safety. The reliability index as defined by Equation 6.6 is obtained directly from the two moments, mean and variance, and requires no assumption about probability density functions. The FOSM approach can be extended to problems with performance vectors and to performance functions expressed numerically by finite-difference or finite-element methods (Ditlevsen 1983).

The procedures described above provide probability estimates for many practical problems. However, these probability estimates are only approximate in most cases. When more accurate estimates of the reliability are required, first-order reliability and second-order reliability methods (FORM and SORM) may be applied (Ang and Tang 1984; Madsen et al. 1986). In these methods the partial derivatives in Equations 6.2 through 6.5 are evaluated at the most likely failure point on the surface defined by the performance function. An iterative procedure is required to obtain the failure point and the probability of failure. Finally, Monte Carlo simulations can be used when the system performance assessment becomes too complex for analytical evaluations.

Solutions were obtained for reliability of soil slopes by Tang et al. (1976) and of rock slopes by Einstein et al. (1983) and Scavia et al. (1990). Chowdhury and Tang (1987) presented a review of probabilistic analysis of slope stability. Methods for evaluating landslides induced by precipitation and by earthquake were reviewed by Ang et al. (1985). Where high pore pressures caused by precipitation may initiate instability, estimates of failure probability should account for the probable occurrence of the critical pore pressure that will cause failure. Examples of estimating pore pressures due to rainfall were given by Wu and Swanston (1980), Bevan (1982), Sangrey et al. (1984), and Suzuki and Matsuo (1991). Failure probability can also be calculated for the various types of protective physical control systems mentioned in Chapter 5 and described further in Chapters 17 and 18.

Where available data are insufficient for statistical analysis, the landslide hazard can be estimated by judgment. Roberds (1991) described a procedure by which slopes along a route were inspected and a probability of failure was assigned to each possible mode of failure on the basis of subjective judgment. Probabilities of failure can also be assigned to slopes on the basis of observed failures. The probabilities of failure or success pertaining to avoidance, codes, and zoning involve social and political considerations and are much more difficult to evaluate. The use of subjective probability based on experience may be the only way to estimate such probabilities [see examples given by Keeney and Raiffa (1976)].

Safety of a geotechnical system may mean satisfactory performance with respect to several modes of failure. For instance, a retaining wall can fail by overturning, sliding, or lacking adequate bearing capacity. Landslides can be induced by precipitation or earthquake. In a broad view, landslides often occur as one mode of multiple failure modes triggered by some event (Advisory Board on the Built Environment 1983; Advisory Committee on the International Decade for Natural Hazard Reduction 1987). Examples are the 1964 Alaska earthquake, which triggered tsunamis, local flooding, and many landslides, and the 1980 Mount St. Helens eruption, with associated landslides, floods, and wildfires.

Multiple modes of failure require a shift of perspective from mitigation of individual modes, such as landslides, to mitigation of an entire system that takes all of the modes into account (see Chapter 5, Section 6). For example, a building moved from a floodplain to a hillside to avoid floods may be at increased hazard from landslides or earthquakes.

The plan of mitigation should consider all possible failure modes. When failure may be caused by landslide or by flood, the failure probability (P_f) is

$$P_f = P(A \cup B) = P(A) + P(B) - P(A \cap B) \quad (6.7)$$

where

A = failure due to landslide,
B = failure due to flooding, and
$\cup$ and $\cap$ = union and intersection between events.

In this simple case, events A and B may be considered independent; hence $P(A \cap B)$ is given by the product of $P(A)$ and $P(B)$. Otherwise the conditional probability $P(A \mid B)$ or $P(B \mid A)$ is needed. For complex problems in which the effect of correlations between the respective failure modes may not be easily determined, one can estimate the upper and lower bounds on P_f for system failure (Ang and Tang 1984).

4. DECISION UNDER UNCERTAINTY

In probabilistic decision theory, the choice between available options is dependent on the preferences of the decision maker concerning all possible outcomes of each of the options. A simplified flow diagram that illustrates the decision-making process is shown in Figure 6-2. Step 1 in a geotechnical engineering project is site exploration and soil testing to define material distribution and material properties. The results are used to characterize the site. In Step 2, all possible failure modes are identified. In Step 3, the hazard or probability of failure P_f for each mode is estimated, as described in the previous section. For each mode of failure, the consequence C_f is estimated (Step 4). Then the risk, defined as

$$R = P_f C_f \quad (6.8)$$

is calculated (Step 5). This procedure is repeated for each of the available options in the management strategy, which obviously should include the options of doing nothing (as discussed in Chapter 5) and of additional investigation. The choice of a management strategy is made on the basis of the decision criterion, which should include the potential risk associated with each option and the initial capital cost of the option. For some problems, the criterion may be the expected cost, which is defined as

$$E(C) = C_o + P_f C_f \quad (6.9)$$

where

C_o = initial cost,
P_f = probability of failure, and
C_f = consequence or cost of failure.

In more complicated situations, some of the consequences cannot be directly represented as monetary values. A utility function is used to express the owner's preferences with respect to the possible outcomes. Multiattribute utility makes it possible to include such attributes as delays or loss of service, lost opportunity, social disruptions, and effects on users and nonusers. The use of multiattribute utility in decision analysis was treated by Raiffa and Schlaifer (1961), Keeney and Raiffa (1976), and Ang and Tang (1984).

After the probabilities and consequences have been estimated, methods of decision analysis (Benjamin and Cornell 1970; Ang and Tang 1984) may be used to arrive at management decisions (Step 6). A hypothetical decision tree, such as that shown in Figure 6-3 for landslide mitigation, can be used to identify the alternatives of actions, pos-

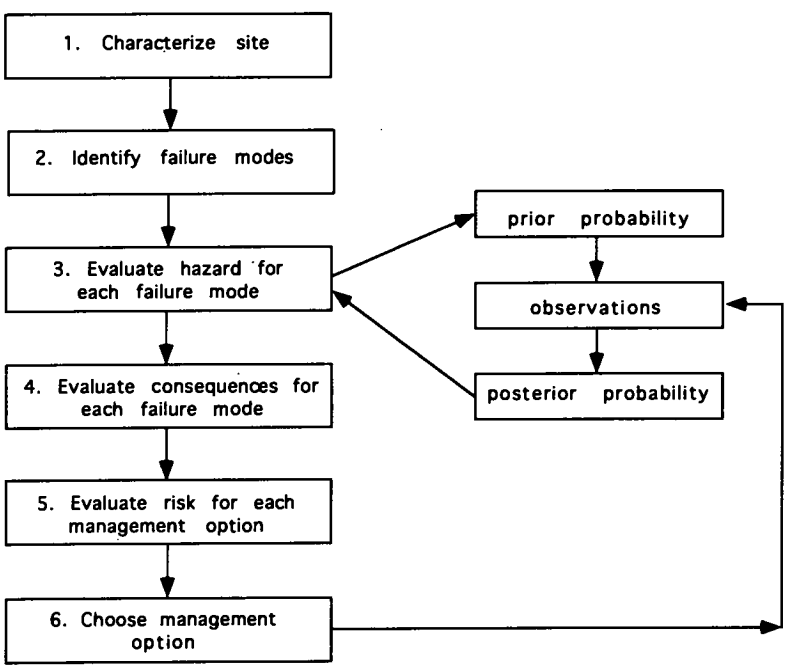

FIGURE 6-2 Decision-making process for landslide mitigation.

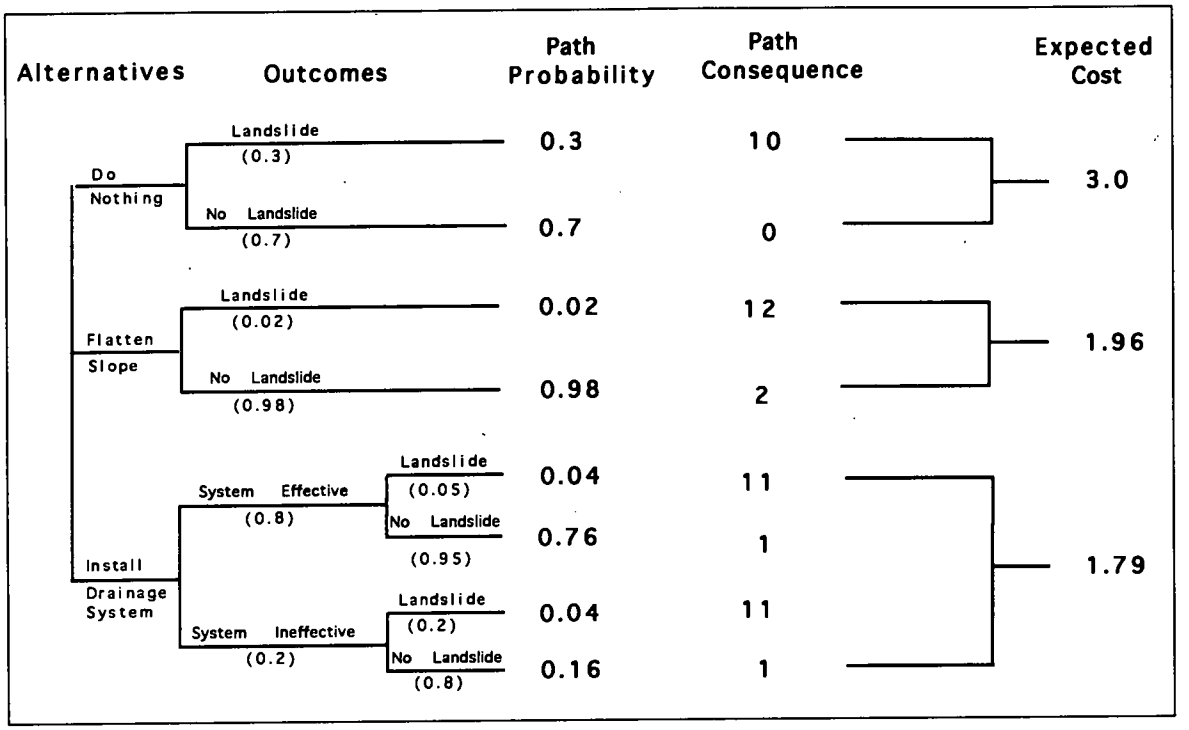

FIGURE 6-3
Decision tree for landslide mitigation.

sible outcomes, and respective consequences or costs for each scenario or path. The probability of each branch of the outcome can be determined either from probabilistic models or subjectively from available information. As given in Equation 6.9, the expected cost of each alternative is the summation of the path probability times the path consequences over the outcomes of all scenarios for that alternative. The alternative with the least expected cost is chosen if the expected value is the criterion for decision. In this example, the optimal solution for this site is the installation of a drainage system. When the probabilities or costs are crude estimates, a sensitivity analysis should be performed to find out if the optimal solution changes with the probabilities and costs.

5. LANDSLIDE HAZARD MAPS

When risk assessment is made over a large area, the results may be expressed in the form of landslide hazard or landslide risk maps (Brabb 1984). Various types of landslide hazard maps are described in Chapter 8. An ideal landslide hazard map should provide information concerning the spatial and temporal probabilities of all anticipated landslide types within the mapped area, and also include information about their types, magnitudes, velocities, and sizes. In this section, the construction of hazard maps is described on the basis of the methodology outlined in the previous section.

A comprehensive mapping procedure for landslide management was proposed by Einstein (1988). Maps containing different types of information are constructed in sequence. According to Einstein, *state-of-nature maps* are those that present data without interpretation. These include geologic and topographic maps, precipitation data, and so forth, as well as the results of site investigation. Construction of such maps corresponds to Step 1 in Figure 6-2. *Danger maps* indicate the possible modes or failure mechanisms, such as debris flows, rock falls, and so forth. These maps follow from Step 2 in Figure 6-2. *Hazard maps*, Step 3 in Figure 6-2, show the probability of failure for various failure modes shown on danger maps. For simple failure modes, the probability that such a failure could occur during a given time interval can be estimated on the basis of the probability distributions of the triggering mechanism (rainstorm, earthquake, etc.), soil or rock properties, slope geometry, and other controlling factors. The results can be shown on a map that delineates zones with different failure probabilities (Viberg 1984; Wu 1992). Alternatively, hazards are expressed qualitatively as high, medium, or low. If

the consequence of failure, also called "vulnerability" by Varnes et al. (1984) and van Westen (1993), can be estimated, the risk as defined in Equation 6.6 can be calculated for the construction of a risk map, as shown in Steps 4 and 5 of Figure 6-2. Finally, a *management map* can be used to summarize the management decisions (Step 6 in Figure 6-2).

Most available maps fall into the categories of danger and hazard maps. Danger maps can be constructed by consideration of lithology, rock structure, and hydrology and the relation of these factors to the topography. When data are insufficient for analytical evaluation of failure probability, a rating system may be used to obtain a hazard rating of low, medium, or high. Failure probabilities may be estimated from observed landslide frequencies (Brabb et al. 1972; Wieczorek 1984). These estimates may be based on examination of multiple-date aerial photographs (Canuti 1986), ground observations, or review of historical records. Danger maps provide a spatial distribution of landslides (Wright et al. 1974). A combination of historical and subjective assessment has been used for regions with similar geology, topography, and climate. This approach was used to produce the U.S. landslide susceptibility map by Radbruch-Hall et al. (1982). Hazard can also be estimated by statistical correlation with factors considered to correlate with landslides (Carrara et al. 1991). Fully worked out examples of quantitative landslide risk analysis are rare because of the difficulties in defining both hazard and consequence quantitatively (Einstein 1988; Kienholz 1992). One example of a complete mapping system is the proposed methodology called *Plans d'Exposition aux Risques Naturels* (PER) (Office of the Prime Minister 1985).

6. HISTORIC FAILURE RATE

Historic failure rates can be helpful by providing a broader perspective to the application of hazard prediction methods. Ideally, landslide hazard should be expressed as the probability of failure per time per area. Hazards for other forms of instability can also be included. For slopes undergoing creep movement, the probability of accelerating movement may be appropriate. Examples of historic failure rates include those for the Alpine and Pre-Alpine regions of Switzerland, where "super events," such as the Flims and Sierre landslides, have return periods of 10^4 years or greater, whereas "major events," such as the landslides at Goldau or Deborence, have return periods of 10^2 to 10^3 years (Einstein 1988). However, there is a general lack of formal statistical evaluation of landslides.

In the design of corrective measures, the engineer may refer to failure rates of geotechnical systems. Although failure statistics have not been formally compiled for geotechnical systems, rough estimates can be made based on data from various studies. Baecher et al. (1980) determined that the historical rate of failure of dams is about 0.0001 per dam-year, or about 0.01 for the average life of a dam, for a wide range of locations and times of construction. The details of failure mechanisms are often imprecise, but it appears that about one-third of the failures were due to overtopping and another one-third to internal erosion, piping, or seepage. These numbers are close to what would be expected from the judgment and experience of the profession. The remaining one-third of the failures are due to slides and other mechanisms.

Results of an extensive survey of embankment and cut-slope failures along British motorways showed that "percent of failure" for embankments and cuts in different geologies ranged between 0 and 0.13 (Perry 1989). The percent of failure was defined as length of failed slope to total length of slope, and the age of the earthworks ranged from 2 to 26 years. An exceptionally low percentage of failure of 0.003 was found for cuts in London clay, and this low percentage was attributed to the flatter design slopes adopted for this well-known material. The statistics reflect a wide range in construction quality and design criteria.

More recent experience by the Ministry of Transportation of Ontario (MTO) with embankments on clay soils similar to Leda clay and New Liskard clay showed that no failures have occurred where the design safety factor is 1.3 for a shear strength measured by the MTO field vane (M.S. Devata, personal communication, 1992, Ministry of Transportation of Ontario, Canada). Since there have been at least 1,000 embankments of this type, it appears that the failure probability is less than 0.001 per embankment during the initial period of several years when modern design and construction methods have been used with a material that has been thoroughly investigated and a geology that is without surprises and anomalies.

Estimates of failure rates have also been expressed by individuals on the basis of their experi-

ence. For example, Meyerhof (1970) estimated the overall failure rate to be around 0.001 for earthworks and retaining structures and 0.0001 for foundations over the lifetime of the structure. Lambe's (1985) estimate of the lifetime failure probability for embankments and slopes designed by qualified engineers and built with adequate supervision and monitoring of performance was 0.0001 or less when the design safety factor was 1.5. Besides these judgmental estimates, results of reliability analyses on previously designed structures are also worth noting. The lifetime failure probabilities for foundations of offshore gravity structures (Wu et al. 1989) and of highways (Barker et al. 1991) were estimated to be 0.001 or less. Hence, a lifetime failure probability on the order of 0.001 may be acceptable to the profession. However, one should be cautioned that the consequences of failure in individual cases can vary substantially. Hence, acceptable failure probability can also vary between projects. In this regard, Whitman's (1984) plot of annual failure probability versus consequences of failure for a number of structures and civil engineering projects might provide some indication of acceptable risks (see Figure 6-4).

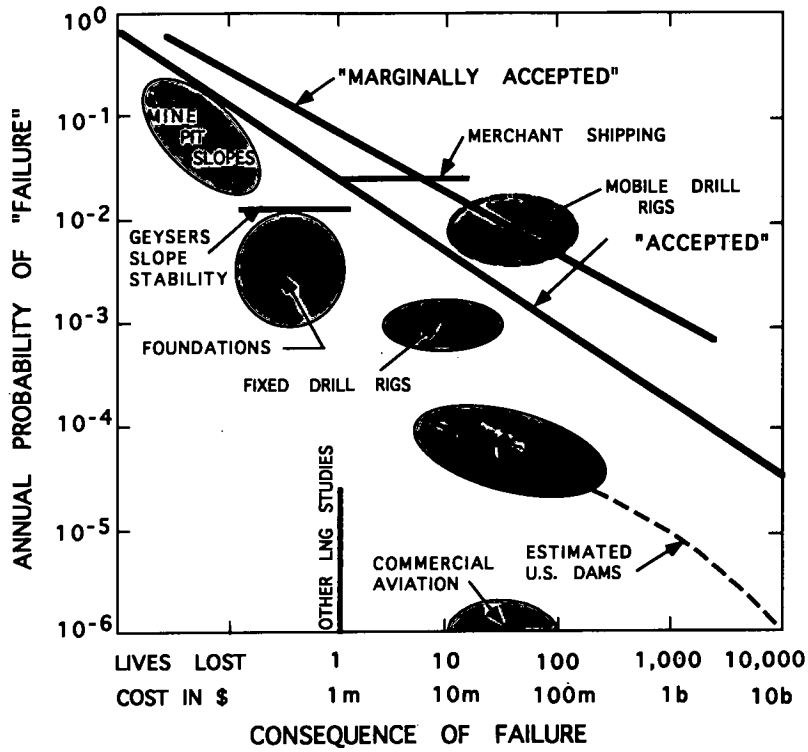

FIGURE 6-4
Risks for selected engineering projects (Whitman 1984).
REPRINTED WITH PERMISSION OF THE AMERICAN SOCIETY OF CIVIL ENGINEERS

7. APPLICATIONS

Although it is possible to use probabilistic methods to arrive at decisions on location of transportation and other facilities in which socioeconomic factors are involved [for examples, see work by Keeney and Raiffa (1976)], such methods have not been widely used in landslide hazard reduction by regulation or zoning. Applications of probabilistic methods to design and operations of more limited scope are plentiful. Several examples are given below, beginning with the simple and progressing to the complex. The degree of complexity depends on the nature of the problem.

A scoring system for rock-fall hazards is used by the Oregon Department of Transportation (Pierson 1992) for management of rock slopes along highways. Scores are assigned according to geologic structure, erosion, and so forth. The scores are based largely on observed frequency of rock falls and are proportional to probabilities of failure, given the geologic structure, erosion, and other factors. Scores are also assigned for route conditions, such as sight distance and roadway width. These scores represent consequences, because short sight distance and narrow roadways are more likely to result in accidents, given a rock fall. Thus, the total score contains the essential elements of risk as defined in Equation 6.8. The ranges in cost of various methods for rock-fall mitigation are estimated. Criteria for choosing slopes for mitigation include a slope's score in the rock hazard rating system (RHRS), the RHRS score relative to cost of mitigation, and others. Although this system does not use the formal method of the decision tree, it contains the essential elements of decision analysis.

The method used by Wagner et al. (1987) to identify hazards of rock and debris slides in Nepal is close to Einstein's mapping procedure. State-of-nature maps consist of a geologic map and a slope map (Maps 1 and 2 in Figure 6-5). A morphostructural map (Map 3 in Figure 6-5) is constructed from the slopes and dips of discontinuities, which are planes of weakness. Where the dip of the slope exceeds that of a discontinuity and the two dips are in the same direction, the slope is considered "structural," and wedge or block failures are possible. Thus, the morphostructural map is analogous to Einstein's danger map. The probability of failure is estimated empirically by weights assigned to the structure, lithology, hydrology, tectonics,

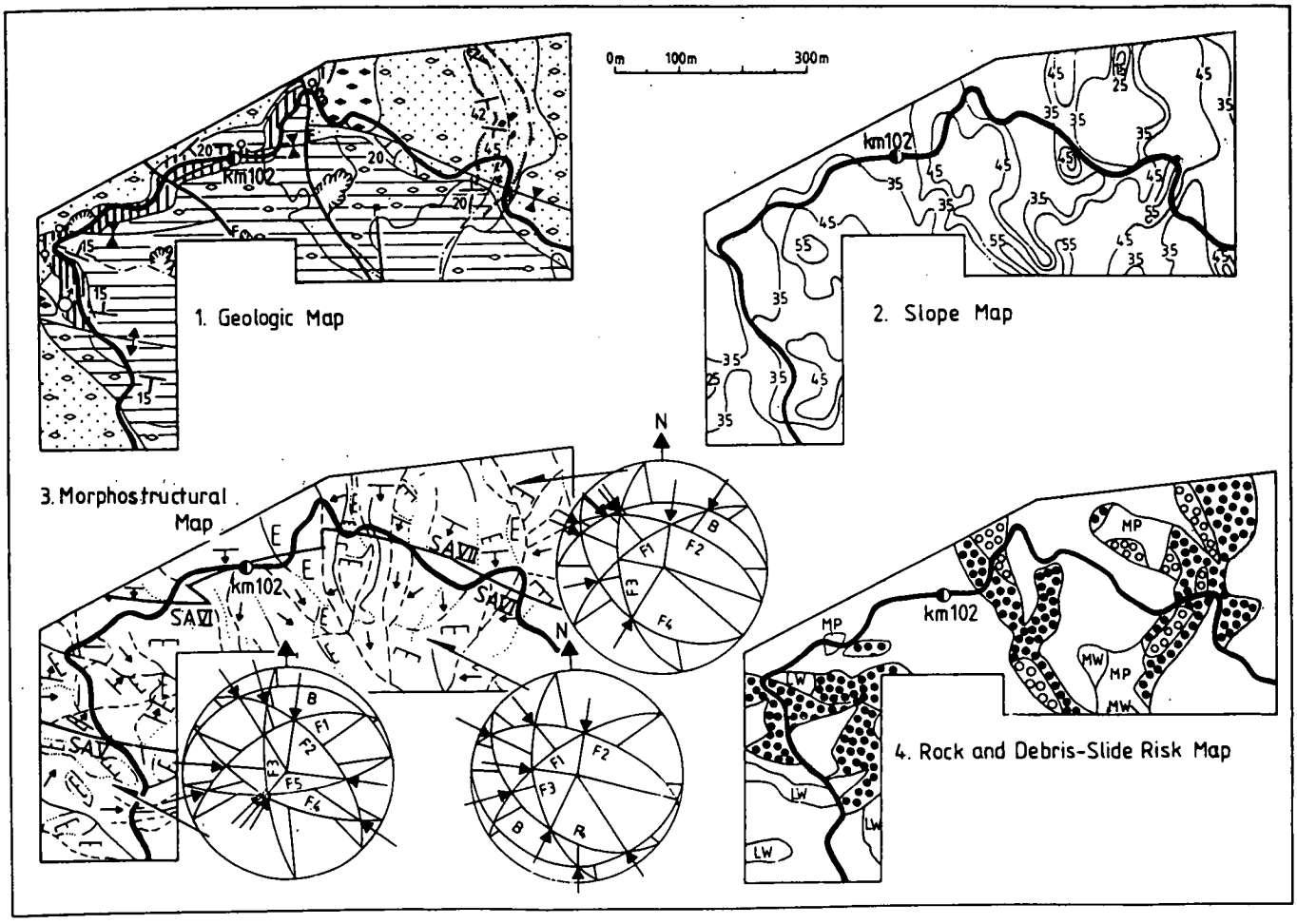

1. Geologic Map

- Thick eluvial or colluvial soil
- Rather thin eluvial or colluvial soil / In general sparse outcrops of rock
- Calcareous quartzite with laminae of phyllite; lithological susceptibility of sliding very high
- Carbonaceous, micaceous, and garnet phyllite; lithological susceptibility of sliding very high to high
- Fault
- Anticline and syncline axis
- Dip of the rock
- Crushed rock
- Spring and seepage
- Landslide
- Groundwater level
- Unstable area

2. Slope Map

- Slope contour line (grads)

3. Morphostructural Map

- Ridge or crest
- Sharp ridge or crest
- Rivulet
- Limit of slope unit
- Nonstructural slope unit
- Possible structural slope unit (bed of rock)
- Possible structural slope unit (fracture)

4. Rock and Debris Slide Risk Map

Risk of large failures

- High risk of planar failure
- MP Medium risk of planar failure
- LP Low risk of planar failure

Risk of medium and small failures

- High risk of wedge failure
- MW Medium risk of wedge failure
- LW Low risk of wedge failure
- Very low risk of rock and debris slides; possible soil failure within wet areas

and weathering. The sum of the weights for each of the factors considered is used to obtain a qualitative description of hazards as low, medium, or high. The resulting hazard map, called a risk map, is shown as Map 4 in Figure 6-5. Major rock and debris slides that occurred after completion of the road were located in the three areas of high risk shown on Map 4. This hazard identification procedure has been adopted for selection of routes in mountainous regions (Deoja and Thapa 1989).

A complete event-tree analysis has been used to choose a maintenance program for rock slopes along transportation routes (Roberds 1991). The procedure consists of the following steps:

1. Identify possible failure modes,
2. Estimate probability of failure,
3. Evaluate consequences of failure, and
4. Evaluate effectiveness and cost of maintenance activities.

An example of this method is the choice of maintenance actions for rock slopes on a route with low traffic density. The decision tree for the slope management problem is shown in Figure 6-6. Maintenance activities include the following: M_0, do nothing; M_1, scaling; M_2, installation of rock bolts; . . . , M_7, construction of toe protection. Failure modes are F_1, isolated rock falls; F_2, small individual wedge slides; and so on. The consequences for each failure mode are assessed in terms of four components, namely, C_1, cost of repair; C_2, service disruption; C_3, number of injuries or deaths; and C_4, litigation. The effectiveness of each maintenance activity may be expressed by the mean reduction in the number of failures and by the mean reduction of each component of consequence, as shown in Table 6-1. These mean values are computed from the subjective distributions of the number of slope failures, such as $P(NF_i \mid M_i)$, and those of each component of consequence, such as $P(C_j \mid F_i \mid M_i)$, as shown in Figure 6-6, by Monte Carlo simulation.

By translating the service disruption and injuries, deaths, or both, to equivalent costs of $20,000 per day and $100,000 per person, respectively, each

FIGURE 6-5 *(opposite page)* Examples of (*1*) geologic, (*2*) slope, (*3*) morphostructural, and (*4*) risk maps from Nepal (Wagner et al. 1987).

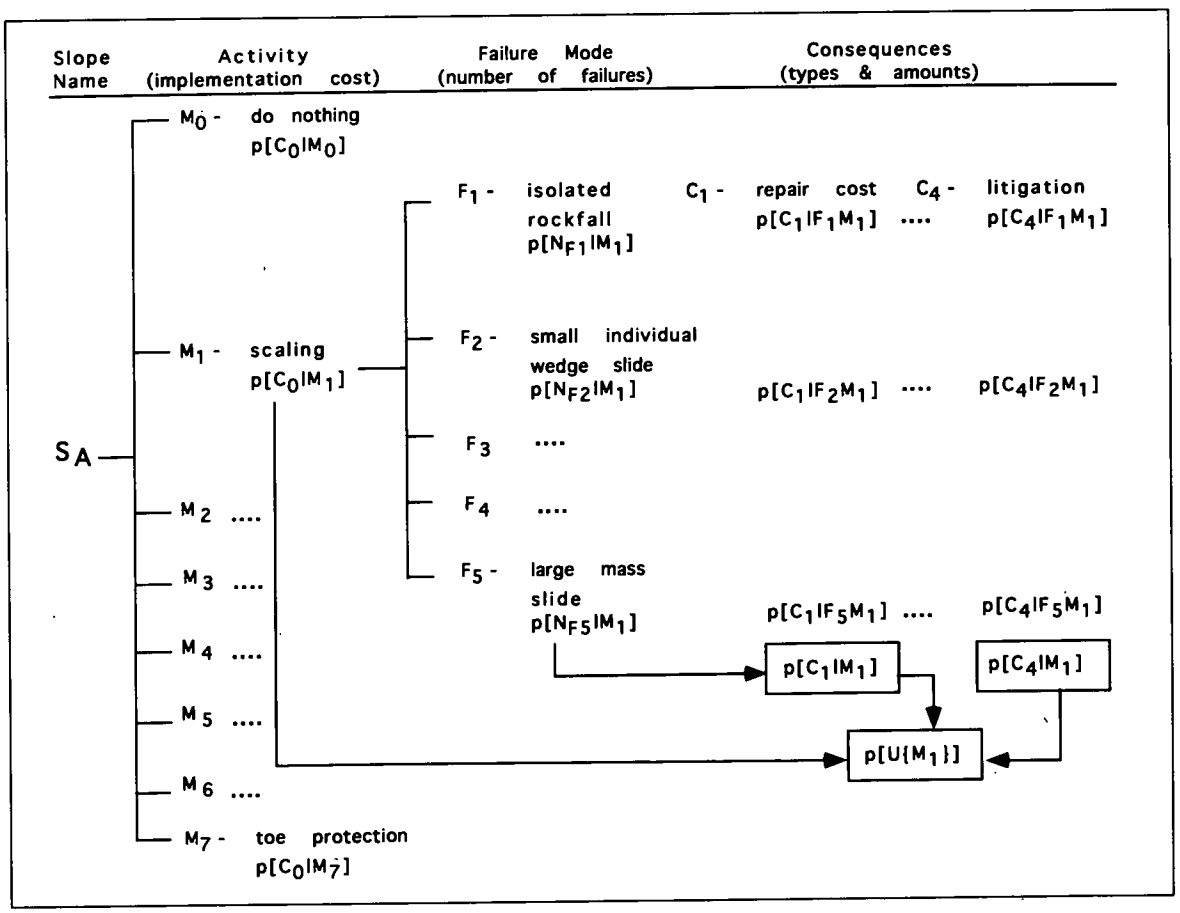

FIGURE 6-6 Evaluation of preventive maintenance activity (Roberds 1991).

Table 6-1
Effectiveness of Maintenance Activity

Maintenance Activity	Reduction in No. of Failures	Reduction in Consequences[a]			
		C_1	C_2	C_3	C_4
M_1	0.6	0	0	0	0
M_2	0.1	0	0	0	0.2
M_3	0.9	0	0	0	0.2
•					
•					
•					
M_7	0	0.5	0.5	0.8	0.2

[a] Fraction of consequence of M_0.

maintenance activity can be measured by a probability distribution of its overall utility, $P[U\{M_i\}]$. The various maintenance activities can then be compared on the basis of their expected utility or the probability that $U_i > U_j$, where U_i and U_j are the utilities of maintenance activities i and j.

REFERENCES

Advisory Board on the Built Environment. 1983. *Multiple Hazard Mitigation: Report of a Workshop on Mitigation Strategies for Communities Prone to Multiple Natural Hazards*. National Research Council, National Academy Press, Washington, D.C., 60 pp.

Advisory Committee on the International Decade for Natural Hazard Reduction. 1987. *Confronting Natural Disasters—An International Decade for Natural Hazard Reduction*. National Research Council, National Academy Press, Washington, D.C., 60 pp.

Agnew, C.E. 1985. Probability Assessment by Dependent Experts. *Journal of the American Statistical Society*, Vol. 80, No. 390, pp. 343–347.

Ang, A.H-S., and W.H. Tang. 1975. *Probability Concepts in Engineering Planning and Design*. John Wiley and Sons, New York, Vol. 1, 409 pp.

Ang, A.H-S., and W.H. Tang. 1984. *Probability Concepts in Engineering Planning and Design*. John Wiley and Sons, New York, Vol. 2, 562 pp.

Ang, A.H-S., W.H. Tang, Y.K. Wen, and B.C. Yen. 1985. Methods for Engineering Hazard Analysis. In *Proc., PRC-US-Japan Trilateral Symposium/ Workshop on Engineering for Multiple Natural Hazard Mitigation*, Beijing, People's Republic of China, Jan. 7–12, pp. G-1-1 to G-1-18.

Baecher, G.B. 1979. Analyzing Exploration Strategies. In *Site Characterization and Exploration* (C.H. Dowding, ed.), American Society of Civil Engineers, New York, pp. 220–243.

Baecher, G.B., N.A. Lanney, and H.H. Einstein. 1977. Statistical Description of Rock Properties and Sampling. In *Proc., 18th U.S. Symposium on Rock Mechanics*, Colorado School of Mines Press, Golden, pp. 5C1-1 to 5C1-8.

Baecher, G.B., M.E. Pate, and R. de Neufville. 1980. Risk of Dam Failure in Benefit-Cost Analysis. *Water Resources Research*, Vol. 16, No. 3, pp. 449–456.

Barker, R.M., J.M. Duncan, K.B. Rojiani, P.S.K. Ooi, C.K. Tan, and S.G. Kim. 1991. *NCHRP Report 343: Load Factor Design Criteria for Highway Structure Foundations*. Final Report. TRB, National Research Council, Washington, D.C.

Benjamin, J.R., and C.A. Cornell. 1970. *Probability, Statistics, and Decision for Civil Engineers*. McGraw-Hill, New York, 684 pp.

Bevan, K. 1982. On Subsurface Storm Flow: Predictions with Simple Kinematic Theory for Saturated and Unsaturated Flows. *Water Resources Research*, Vol. 18, pp. 1627–1633.

Brabb, E.E. 1984. Innovative Approaches to Landslide Hazard and Risk Mapping. In *Proc., Fourth International Symposium on Landslides*, Canadian Geotechnical Society, Toronto, Canada, Vol. 1, pp. 307–323.

Brabb, E.E., E.H. Pampeyan, and M.G. Bonilla. 1972. *Landslide Susceptibility in San Mateo County, California*. U.S. Geological Survey Miscellaneous Field Studies Map MF-360.

Brown, R.V. 1974. *Decision Analysis for the Manager*. Holt, Rinehart and Winston, Inc., New York, 618 pp.

Canuti, P. 1986. Slope Stability Mapping in Tuscany, Italy. In *International Geomorphology* (V. Gardiner, ed.), John Wiley and Sons, New York, Part 1, pp. 231–239.

Carrara, A., M. Cardinali, R. Detti, F. Guzzetti, V. Pasqui, and P. Reichenbach. 1991. GIS Techniques and Statistical Models in Evaluating Landslide Hazard. *Earth Surface Processes and Landforms*, Vol. 16, pp. 427–445.

Casagrande, A. 1965. Rule of the Calculated Risk in Earthwork and Foundation Engineering. *Journal of the Soil Mechanics and Foundations Division*, ASCE, Vol. 91, No. SM4, pp. 1–40.

Chowdhury, R.N., and W.H. Tang. 1987. Comparison of Risk Models for Slopes. In *Proc., Fifth International Conference on Applications of Statistics and Probability in Soil and Structural Engineering*, Vancouver, Canada, pp. 863–897.

Deoja, B.B., and B. Thapa. 1989. *Manual on Mountain Risk Engineering*. International Center for Integrated Mountain Development, Kathmandu, Nepal.

Ditlevsen, O. 1983. *Uncertainty Modeling*. McGraw-Hill, New York, 412 pp.

Einstein, H.H. 1988. Landslide Risk Assessment Procedure. In *Proc., Fifth International Symposium on Landslides*, Lausanne, Switzerland, A.A. Balkema, Rotterdam, Netherlands, Vol. 2, pp. 1075–1090.

Einstein, H.H., D. Veneziano, G.B. Baecher, and K.J. O'Reilly. 1983. The Effect of Discontinuity Persistence on Rock Slope Stability. *International Journal of Rock Mechanics and Mining Sciences*, Vol. 20, No. 5, pp. 227–236.

Halim, I.S., and W.H. Tang. 1991. Reliability of Undrained Clay Slope Containing Geologic Anomaly. In *Proc., Sixth International Conference on Application of Statistics and Probability in Civil Engineering*, Mexico City, Mexico, pp. 776–783.

Hasofer, A.M., and N. Lind. 1974. An Exact and Invariant First Order Reliability Format. *Journal of the Engineering Mechanics Division*, ASCE, Vol. 100, No. EM1, pp. 111–121.

Keeney, R.L., and H. Raiffa. 1976. *Decisions with Multiple Objectives*. John Wiley and Sons, New York, 569 pp.

Kienholz H. 1992. Risk Assessment in Mountains. In *Proc., 1 Simposio Internacional sobre Sensores Remotos y Sistemas de Informacion Geografica (SIG) para el Estudio de Riesgos Naturales*, Bogotá, Colombia, Vol. 2, 20 pp.

Lambe, T.W. 1985. Amuay Landslides. In *Proc., 11th International Conference on Soil Mechanics and Foundation Engineering*, Golden Jubilee Volume, A. A. Balkema, Rotterdam, Netherlands, pp. 137–158.

Lumb, P. 1975. Spatial Variability of Soils. In *Proc., Second International Conference on Applications of Statistics and Probability in Soil and Structural Engineering*, Vol. 2, pp. 397–421.

Madsen, H.O., S. Krenk, and N.C. Lind. 1986. *Methods of Structural Safety*. Prentice-Hall, Englewood Cliffs, N.J.

Meyerhof, G.G. 1970. Safety Factors in Soil Mechanics. *Canadian Geotechnical Journal*, Vol. 7, No. 4, pp. 349–355.

Office of the Prime Minister. 1985. *Mise en oeuvre des Plans d'Exposition aux Risques Naturels prévisibles*. Rapport Administratif et Technique Provisoire. Délégation aux risques majeurs, Paris, 14 pp.

Peck, R.B. 1969. Advantages and Limitations of the Observational Method in Applied Soil Mechanics. *Geotechnique*, Vol. 19, No. 2, pp. 171–187.

Perry, J. 1989. *A Survey of Slope Condition on Motorway Earthworks in England and Wales*. Research Report 199. U.K. Transport and Road Research Laboratory, Crowthorne, Berkshire, England, 49 pp.

Pierson, L.A. 1992. Rockfall Hazard Rating System. In *Transportation Research Record 1343*, TRB, National Research Council, Washington, D.C., pp. 6–13.

Radbruch-Hall, D.H., R.B. Colton, W.E. Davies, I. Lucchitta, B.A. Skipp, and D.J. Varnes. 1982. *Landslide Overview Map of the Conterminous United States*. U.S. Geological Survey Professional Paper 1183, 25 pp.

Raiffa, H., and R. Schlaifer. 1961. *Applied Statistical Decision Theory*. MIT Press, Cambridge, Mass., 356 pp.

Roberds, W.J. 1990. Methods for Developing Defensive Subjective Probability Assessments. In *Transportation Research Record 1288*, TRB, National Research Council, Washington, D.C., pp. 183–190.

Roberds, W.J. 1991. Methodology for Optimizing Rock Slope Preventive Maintenance Programs. In *Proc., Geotechnical Engineering Congress*, American Society of Civil Engineers, New York, Vol. 1, pp. 634–645.

Sangrey, D.A., K.O. Harrop-Williams, and J.A. Klaiber. 1984. Predicting Groundwater Response to Precipitation. *Journal of Geotechnical Engineering*, ASCE, Vol. 110, No. 7, pp. 957–975.

Scavia, C., G. Barla, and V. Bernaudo. 1990. Probabilistic Stability Analysis of Rock Toppling Failure in Rock Slopes. *International Journal of Rock Mechanics and Mining Sciences*, Vol. 27, pp. 465–478.

Schlaifer, R. 1959. *Probability and Statistics for Business Decisions*. McGraw-Hill, New York, 732 pp.

Staël von Holstein, C.A., and J.E. Matheson. 1979. *A Manual for Encoding Probability Distributions*. SRI International, Menlo Park, Calif.

Suzuki, H., and M. Matsuo. 1991. Methods for Predicting Slope Failure during Rainfall Using Estimation Model of Field Suction. In *Proc., Sixth International Conference on Applications of Statistics and Probability in Civil Engineering*, Mexico City, Mexico, Vol. 2, pp. 792–799.

Tang, W.H., M.S. Yucemen, and A.H–S. Ang. 1976, Probability-Based Short Term Design of Soil Slopes. *Canadian Geotechnical Journal*, Vol. 13, No. 3, pp. 201–215.

Terzaghi, K. 1961. Past and Future of Applied Soil Mechanics. *Journal of the Boston Society of Civil Engineers*, Vol. 48, No. 2, pp. 110–139.

van Westen, C.J. 1993. *Application of Geographic Information Systems to Landslide Hazard Zonation*. ITC Publication 15. International Institute for Aerospace Survey and Earth Sciences (ITC), Enschede, Netherlands, 245 pp.

Varnes, D.J., and International Association of Engineering Geology Commission on Landslides and Other Mass Movements on Slopes. 1984. *Landslide Hazard Zonation—A Review of the Principles and Practice*. United Nations Economic, Scientific, and Cultural Organization, Natural Hazards Series, No. 3, 63 pp.

Viberg, L. 1984. Landslide Risk Mapping in Soft Clays in Scandinavia and Canada. In *Proc., Fourth International Symposium on Landslides*, Canadian Geotechnical Society, Toronto, Canada, Vol. 1, pp. 325–348.

Wagner, A., R. Olivier, and E. Leite. 1987. Rock and Debris Slide Risk Maps Applied to Low-Volume Roads in Nepal. In *Transportation Research Record 1106*, TRB, National Research Council, Washington, D.C., Vol. 2, pp. 255–267.

Whitman, R.V. 1984. Evaluating Calculated Risk in Geotechnical Engineering. *Journal of Geotechnical Engineering*, ASCE, Vol. 110, No. 2, pp. 145–188.

Wieczorek, G. 1984. Preparing a Detailed Landslide-Inventory Map for Hazard Evaluation and Prediction. *Bulletin of the Association of Engineering Geologists*, Vol. 21, pp. 337–342.

Winkler, R.L. 1969. Scoring Rules and the Evaluation of Probability Assessors. *Journal of the American Statistical Association*, Vol. 64, pp. 1071–1078.

Wright, R.H., R.H. Campbell, and T.H. Nilsen. 1974. Preparation and Use of Isopleth Maps of Landslide Deposits. *Geology*, No. 2, pp. 483–485.

Wu, T.H. 1989. Variability of Geologic Materials. In *Art and Science of Geotechnical Engineering* (E.J. Cording, W.J. Hall, J.D. Haltiwanger, A.J. Hendron, and G. Mesri, eds.), Prentice-Hall, Englewood Cliffs, N.J., pp. 221–239.

Wu, T.H. 1992. Prediction and Mapping of Landslide Hazards. In *Proc., Second US-Asia Conference on Engineering for Mitigating Natural Hazards Damage*, Yogyakarta, Indonesia, pp. G10-1 to G10-08.

Wu, T.H., O. Kjekstad, I.M. Lee, and S. Lacasse. 1989. Reliability Analysis of Foundation Stability for Gravity Platforms in the North Sea. *Canadian Geotechnical Journal*, Vol. 26, pp. 359–368.

Wu, T.H., and D.N. Swanston. 1980. Risk of Landslides in Shallow Soils and Its Relation to Clear-cutting in Southeastern Alaska. *Forest Science*, Vol. 26, pp. 495–510.