Evaluation of Light Rail Transit for Austin, Texas

Alan Wulkan
Capital Metro
Austin, Texas

Lyndon Henry
Texas Association for Public Transportation
Austin, Texas

Although rail transit modes have, for several decades, been considered applicable mainly for larger, high-density conurbations, a number of North American cities of lower density and population have begun implementation or serious consideration of light rail as a feasible component of their urban transit networks. This is due primarily to the typically lower capital characteristics of light rail transit (LRT) and the lower patronage levels that are therefore required for feasibility. Austin, Texas, is one such smaller city in which, after more than a decade of evaluating LRT, actual implementation at last appears to be nearing reality because of the availability of a newly instituted dedicated funding base.

The process through which these developments have occurred, and the factors involved in determining feasibility, provide some insight into the LRT planning process that may be relevant to other medium-sized urban areas. This discussion will deal with these issues, focusing on the specifics of the Austin case but with some view to general applicability. Also of interest is the degree to which private citizens and their organizations have initiated new concepts, maintained public interest in light rail, and interacted with official staff and decision makers in the planning process.

KEY PLANNING ISSUES

An overview of the background of the development of the LRT concept in Austin, including major issues involved in the evaluation and planning process, will lead into a discussion of the current situation.

Background

In the early 1970s conventional wisdom in Austin, and in the U.S. transport planning profession generally, held that, because of its typically high capital costs, rail transit could only be justified in quite large metropolises with high population densities. Representative of this attitude was the State of Texas Public Transportation Development Manual (1), prepared in 1971 for the then-existing Texas Mass Transportation Commission (subsequently merged into the Texas State Department of Highways and Public Transportation) by Wilbur Smith & Associates. Declaring that one of the criteria necessary for rail transit was density of more than 14,000 persons per square mile, the manual definitively pronounced that "no Texas city meets these criteria" (1). Unfortunately, the manual neglected to note that the Lindenwold high-speed heavy rail line had recently been inaugurated, with great success, in a New Jersey suburban area with fewer than 500,000 population and a density of about 2,000 persons per square mile; Atlanta, with only 3,900 persons per square mile central-city density, was proceeding to install rail transit; and, most interestingly, rail transit was already operating successfully in Texas--particularly the highly successful private surface-subway light rail line in Ft. Worth, which has a density of less than 2,000 persons per square mile.

Transit was a "hot" issue in Austin at this time. An innovative free-fare shuttle bus system for students had been inaugurated by the University of Texas (UT) and its ridership was soaring, which indicated a potential for the right application of transit in the right opportunity. Austin's private urban system was being ever more heavily subsidized from municipal funds and was eventually acquired outright by the city in 1973. Although its ridership subsequently increased modestly, it lacked many of the specific rider-attracting features of the UT shuttle bus service (e.g., free fare, exclusively limited-stop operation, frequent headways), and some decision makers and planners exhibited interest in more innovative and ambitious transit possibilities.

Interest in some form of rail rapid transit had been evidenced in Austin as early as 1968, when the leader of the city's downtown organization proposed a "subway conveyance" to move Austinites to, from, and between its major central activity concentrations. These concentrations (Figure 1) combine into a "core area" of 1.8 mi^2 (4.7 km^2) made up of three powerful traffic-generator subareas: the central business district (CBD) with (in 1980) 24,000 employees, the Capitol Complex (cluster of state offices) with about 15,000 employees, and the University of Texas campus with some 45,000 students and 20,000 employees. Added to this core area, which is itself an extraordinarily dense activity concentration for a smaller city, is the predominantly linear north-south urban development pattern that is

FIGURE 1 Capital Metro service plan—central system.

largely constrained by the Balcones range of hills and the Colorado River to the west and relatively impervious clay soil on the east. Thus the pattern of traffic flow has been generally funneled into north-south corridors of quite high rider volumes.

These characteristics underlay the basic argument of the first formal, technical proposal for an Austin light rail system in 1973 (2), which proposed a 19.2-mi (30.0-km) light rail line, including a 2-mi (3.2-km) subway, through the core area and into Austin's north and south suburbs. The plan took advantage of another feature that has persistently enhanced the feasibility of LRT in Austin: the existence of railroad rights-of-way leading into or near the core area. The Texas Association for Public Transportation (TAPT) proposal (2) initiated interest in LRT not only in Austin but in Dallas and elsewhere. This led to the inclusion of LRT in the official planning processes of the Austin Transportation Study (ATS, Austin's metropolitan planning organization for transport).

By 1975 preliminary ATS analyses had begun to indicate that either an LRT-based or a busway-based system would, by attracting about 225,000 daily transit riders and nearly 60 percent of core work trips (year 1995), constitute the least-cost solution to Austin's transportation problems (3). Unfortunately, although dedicated funding for highways is constitutionally guaranteed in Texas, funding for transit is far less accessible; the ambitious ATS plans appeared to be financially difficult to implement.

In an effort to break the deadlock with a more achievable, lower cost solution, TAPT in 1976 released a new study (4), which proposed an initial "starter" 9.7-mi (15.6-km) LRT line from suburban South Austin to the UT campus. Low-cost, all-surface routing involved the assumed shared use of 7.1 mi

FIGURE 2 Capital Metro service plan—regional system.

(11.4 km) of the 100-ft-wide right-of-way of the Missouri Pacific Railroad (MPRR), as well as reserved transitways in public thoroughfares, including an existing street bridge over the Colorado River (which divides the city into North and South Austin). This new TAPT proposal, including design and ridership forecasts (19,000 per day in 1985) and projecting capital cost at $43.7 million (1976 dollars), intensified interest in LRT but failed to lead to the immediate implementation for which proponents had hoped. However, in 1979 ATS adopted its final long-range plan (5) with several exclusive transit corridors proposed for either LRT or busway, including the suggested route of TAPT's South Austin LRT proposal.

LRT received another boost in 1979 from Austin's Department of Urban Transportation, which, in a study of a core area transit circulation system, recommended either bus or LRT mode (6). However, although the city's Urban Transportation Commission subsequently recommended LRT for the exclusively intercore system, no progress toward actual implementation was made, again largely because of the financing problem.

Concluding that obtaining adequate funding for transit was clearly the key to realizing Austin's dreams for improved public transport, including LRT, transit advocates and municipal officials alike came to the conclusion that taking advantage of newly enacted legislation permitting the establishment of a sales tax-funded metropolitan transit authority (MTA) offered the best hope. This led in 1983 to the appointment by the Austin City Council of an MTA Interim Board (subject to eventual voter confirmation) that undertook the development of an ambitious new service plan (7) based on predicted sales tax revenues. Included in this plan (further discussed in the second part of this paper) are both a quintupling of the bus fleet and the implementation of fixed-guideway "express corridors" for which LRT and busway appear to be the most promising modal contenders. (See Figures 1 and 2.)

By 1984 the prospects for LRT were substantially improved by the expressed desire of the Southern Pacific Railroad (SPRR) to divest itself of its line through Austin, possibly by selling it to the city of Austin or the nascent MTA (now called Capital Metro). Should this right-of-way (ROW) be acquired for transit, the existing light-volume freight service might be continued on the trackage during late-night periods, in a manner similar to that of the transit and freight sharing arrangement in San Diego.

Several recent analyses of the potential for LRT have further suggested that a definite, and substantial, potential for LRT may well exist in Austin, whether elevated or routed in more conventional surface alignments. In the spring of 1984 a study (8) (independent of that commissioned by Capital Metro) that focused primarily on the north and northwestern portion of Austin projected year 2000 weekday ridership of 22,600 (work trips only) for a surface LRT line in the median of a major north-south thoroughfare corridor (Lamar Boulevard/Guadalupe Street) and 25,200 per day for an aerial LRT line in the same corridor.

Cursory sketch-planning analysis by Capital Metro's consultants, Barton-Aschman Associates (using highly conservative assumptions such as uncongested roadway travel), has indicated that year 2000 LRT patronage volumes in the corridors tentatively selected for Phase 1 development would range from 14,800 to 24,400 per day, and in one or more cases could qualify for UMTA federal capital cost assistance (9).

Further indication of the potential for LRT in the Austin area is found in an analysis completed in late 1984 by TAPT (10). Its objective was to present an optional LRT alignment and design for the north (Lamar/Guadalupe) "express corridor" in the official Capital Metro plan--a routing concept that affords lower cost and shorter time of implementation through almost exclusive use of railroad right-of-way (mainly SPRR) (Figure 3). Station placements an average of 1.4 mi (2.3 km) apart and vehicles with performance characteristics similar to those planned for Sacramento were assumed, and a scheduled speed of 32.4 mph was calculated. A cost-ridership analysis, assuming all-day headways of 15 min and fares ranging from $0.60 to $1.00 (1984 dollars), indicates that such an LRT line, although it would cost $6.4 million (1984 dollars) per mile ($4.0 million per kilometer) including line construction, right-of-way, vehicles, maintenance facilities, engineering, administration, and contingencies, would attract 28,300 weekday riders in 1990 and cover 60 percent of its operating costs from fare-box revenues. The Capital Metro Board has voted to include such a possible alignment as an option for further evaluation in the subsequent alternatives analysis process.

Major Planning Issues

Debunking the Density Myth

It can be seen that the serious consideration of LRT for the Austin area has necessitated repudiation of

FIGURE 3 Proposed LRT line in north corridor using railroad right-of-way.

the density myth: the notion that extremely high urban densities are a prerequisite to feasible rail transit implementation. The density myth rests on at least two misconceptions: (a) that high densities precede rail development (on the contrary, the evidence strongly suggests that rail transit development tends to foster the density) and (b) that rider access to a new rail line is predominantly by foot (in actuality, access in outlying suburbs tends to be by automobile--park-and-ride or dropoff-and-ride). Furthermore, the Austin case strongly emphasizes that high travel volumes in a given corridor, resulting from urban development patterns or other factors, may present justifiable opportunities for rail transit; thus traveler density, not area population density, is the real key. Hence, depending on specific conditions, lower population or lower density areas can justify fixed-guideway systems to solve special problems (e.g., Ft. Worth, Texas; Morgantown, West Virginia; Calgary and Edmonton, Alberta, Canada; Bielefeld, Federal Republic of Germany).

Austin, which has both population and density within the "ball park" of other areas operating or implementing light rail (Figures 4 and 5), exhibits several factors that have combined to make light rail a feasible option: linear pattern of urban development, relatively low freeway lane-miles per capita, rapid growth with concomitant exacerbation of traffic congestion, and a strong core area.

Advantages of Railroad ROW

Another critical variable that enhances the feasibility of LRT in a medium-sized city such as Austin is the potential availability of railroad right-of-way, which tends to offer relatively high performance opportunities (and thus high passenger attractiveness) at frequently lower construction cost than do alternative alignments in public thoroughfares. A comparison of some operational and cost characteristics for both street-median and railroad ROW construction, based on findings in TAPT's Austin area studies, is given in Tables 1 and 2. It can be seen that street routing tends to entail somewhat higher utility relocation costs (the expense of moving power lines, water and gas mains, and so forth) and street reconstruction expenses, which are less commonly encountered in rail ROW alignments. And, although most of the ROW for street routings is already public property, additional ROW acquisition is commonly needed to widen the affected thoroughfare so as to maintain motor vehicle capacity. However, total cost feasibility may vary drastically from area to area depending on real estate values, specific alignment problems, and other factors.

In terms of operations, rail ROW alignments tend to provide the opportunity for faster operating and scheduled speeds largely because there are few possibilities for conflict with local traffic. These alignments also tend to offer greater possibilities

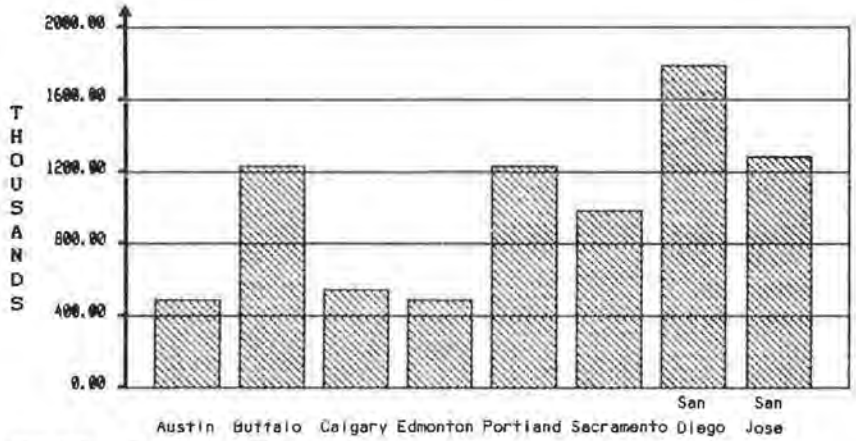

FIGURE 4 Urban area populations.

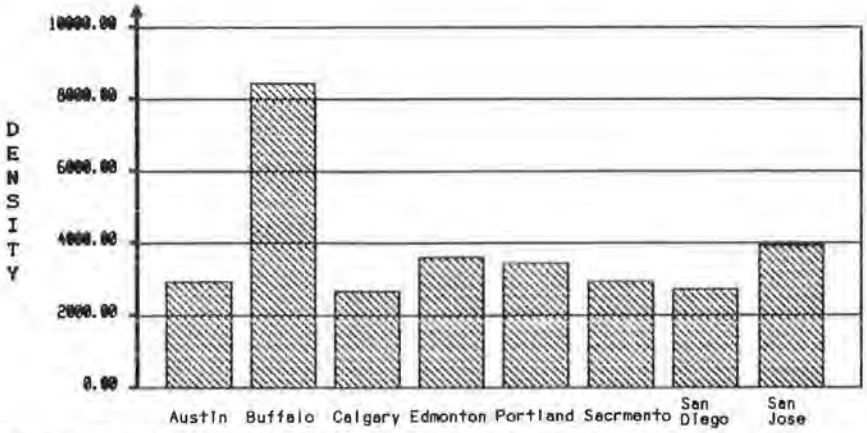

FIGURE 5 Urban area population densities (persons per square mile).

TABLE 1 Typical LRT Operating Characteristics

	Street Alignment	Rail ROW Alignment
Scheduled speed (peak)	Approximately 100% of automobile traffic	130-200% of automobile traffic
Scheduled speed (off-peak)	60-70% of automobile traffic	80-120% of automobile traffic
Passenger access	Mainly walk-up and bus transfer	Predominantly automobile (P&R/K&R); some walk-up and bus transfer

TABLE 2 Typical LRT Line Construction Cost Characteristics

	Street Alignment	Rail ROW Alignment
ROW acquisition	Minimal to moderate (may need to purchase extra ROW to widen thoroughfare)	Heavy (must purchase entire ROW)
Earthwork	Very minimal	Minimal if same basic alignment configuration; moderate to heavy if major alignment conversions needed (e.g., single to double-track)
Civil works	Minimal to heavy (depends on usability of existing structures)	Minimal to heavy (depends on usability of existing structures)
Pavement removal and subgrade preparation	Heavy	Minimal to moderate
Utility relocation	Heavy	Minimal to moderate
Trackwork	Heavy	Moderate to heavy (depends on usability of existing trackage)
Electrification	Heavy	Heavy
Line signalization	Minimal to heavy (depends on level of service)	Moderate to heavy (depends on level of service)
Traffic signalization and crossing protection	Moderate to heavy	Moderate
Signage	Minimal	Minimal

for automobile access because parking and interchange facilities are easier and cheaper to install in the less developed suburban locations through which many rail ROWs run. In contrast, access to street-routed LRT alignments is predominantly by foot and bus transfer because parking facilities next to highly developed public thoroughfares are more expensive and difficult to install.

Some additional advantages of using existing rail corridors are that (a) legal problems of ROW acquisition are simplified through dealing with a single landowner; (b) engineering problems such as geometric design and subgrade preparation have been solved to some extent; and (c) the potential for directing land use and influencing new urban development patterns is somewhat greater because adjacent land is usually in a more raw, undeveloped state than is the case with public thoroughfares.

Thus, because of the possible advantages to be gained even if use of an available rail ROW in a given application appears to present circuity or other major disadvantages in comparison with alternative alignments, all of the foregoing considerations should be thoroughly evaluated before the rail alignment is rejected. In addition, the potential for its use at least in part should not be overlooked.

Attraction of LRT

Even though objective conditions in Austin, and the results of various planning studies, suggest the feasibility of light rail, a question remains: Why is there such strong citizen interest in light rail in Austin? What has motivated such intense civic involvement in the transit planning process?

By and large the proponents of light rail in Austin have been citizens who perceive transit as a clear means of ending their current total dependency on automobiles and their victimization by Austin's growing traffic crisis. They are convinced that light rail offers certain unique benefits that will make such a transit alternative attractive and viable. It is therefore worthwhile to consider some of the basic advantages of light rail:

1. LRT may possibly improve the financial and operational viability of the entire transit system by providing a highly cost-effective means of moving large volumes of travelers into and out of congested areas. Compared with all-bus operation, less manpower might be tied up providing such peak-hour high-capacity service and thus could be shifted to providing greater network spread, peak and off-peak, thus attracting more riders and feeding system viability. Although initial LRT capital costs are high, they and their interest rates are fixed; all transit vehicle-operating costs, on the other hand, are constantly escalating. By substantially reducing operating costs in comparison with bus alternatives, LRT might help maintain higher and more expandable levels of overall transit service than is often possible with more labor-intensive all-bus operations. Furthermore, available revenues could be channeled into even more efficiency-enhancing capital improvements.

2. Transit "expressways," exclusively or partially segregated from motor vehicle traffic, are necessary to provide new lines of capacity through congested areas as well as to attract travelers from automobiles otherwise stuck in the congestion. Although both LRT and busways represent medium-capital-intensive means of developing transitways, for appropriate corridors LRT tends to offer the operational and financial advantages noted previously.

3. Despite the current "energy glut," energy conservation is still an urgent need, and all transit modes provide this benefit in comparison with private motor vehicle transport. As an electrically powered mode, LRT offers the additional advantage of eliminating dependency on petroleum, the most rapidly diminishing energy resource.

4. Air and noise pollution are detrimental to public health. For equivalent rider volumes, LRT operation is not only quieter than that of automobiles and buses, but the absence of exhaust fumes means LRT does not contribute to air pollution in

urban concentrations where the effect is worst. This advantage is multiplied because LRT service often entails significantly fewer vehicles for given rider volumes than does bus service.

5. The potential for influencing urban development patterns is one of LRT's most powerful effects. Key factors involved appear to be the perceived permanency of facilities, their compatibility with both residential and commercial land use, the visibility and design of stations, and the relative level of travel advantage provided. In Austin it has been proposed that LRT would function as a "spine," both in terms of attracting and clustering development (thus helping to guide growth) and in terms of bolstering higher capacity transit corridors interfacing with and fed by a timed-transfer bus network (thus improving total system efficiency). In this regard, Austin is one of the few cities in the United States that can look at European urban forms and stand a chance of resembling them within a few decades.

Capital Metro: The New Key

Recognizing the advantages of a transit mode like LRT and verifying its feasibility are important steps in a large-scale process. But this process is incomplete without an institutional and financial means of making it all actually happen. As is indicated in the second part of this paper, the establishment of an Austin-area metropolitan transportation authority (Capital Metro) earlier this year has provided the crucial link, and the prospect of actually implementing an Austin regional LRT system has risen dramatically.

CURRENT PLANNING AND FUTURE PROSPECTS

Background to Capital Metro

On January 19, 1985, Austin voters approved creation of a Capital Metropolitan Transit Authority (Capital Metro). This action followed more than 15 months of study and intensive community involvement. The authority's Interim Board was established in October 1983 by the Austin City Council and charged with developing a new service plan and conducting an election to confirm the authority. In May 1984 the board selected Barton-Aschman Associates, Inc., in association with Parsons, Brinckerhoff, Quade and Douglas; Ernst and Whinney; and GSD&M (an Austin public relations firm), as the consultant team to assist in this effort. A full-time executive director was retained by the city of Austin in June 1984 to direct the authority's activities.

Community Involvement

From its inception the Capital Metro Interim Board has recognized the importance of involving citizens in the authority's service area in the planning process. The voters' decision to create a permanent transportation authority depended, in large part, on active citizen participation. The board had at the outset requested that an extensive public involvement program be prepared and implemented during the transit planning process. It was especially important that citizen input obtained from the program be tied directly to the technical planning process that was being conducted simultaneously. The transit service plan for the Capital Metro area was thus based on input from citizens, elected officials, and government agency representatives. It also built on lessons learned from previous transit planning efforts in the Austin area as well as experiences of cities elsewhere.

There were four key elements to the community involvement program: a Citizen's Advisory Committee; a Public Officials Coordinating Council composed of local elected officials; a series of public meetings, each held at key milestone points in the study process; and a Speaker's Bureau formed to make presentations at the regular meetings of local community groups. In addition, a public information program was implemented consisting of the following elements: project newsletters, a program for media relations, preparation of a popular report, and a slide presentation summarizing study findings.

All of these public involvement activities were closely coordinated with the technical planning process, as shown in Figure 6. Five major project milestones were identified:

- Identify transportation service options for evaluation,

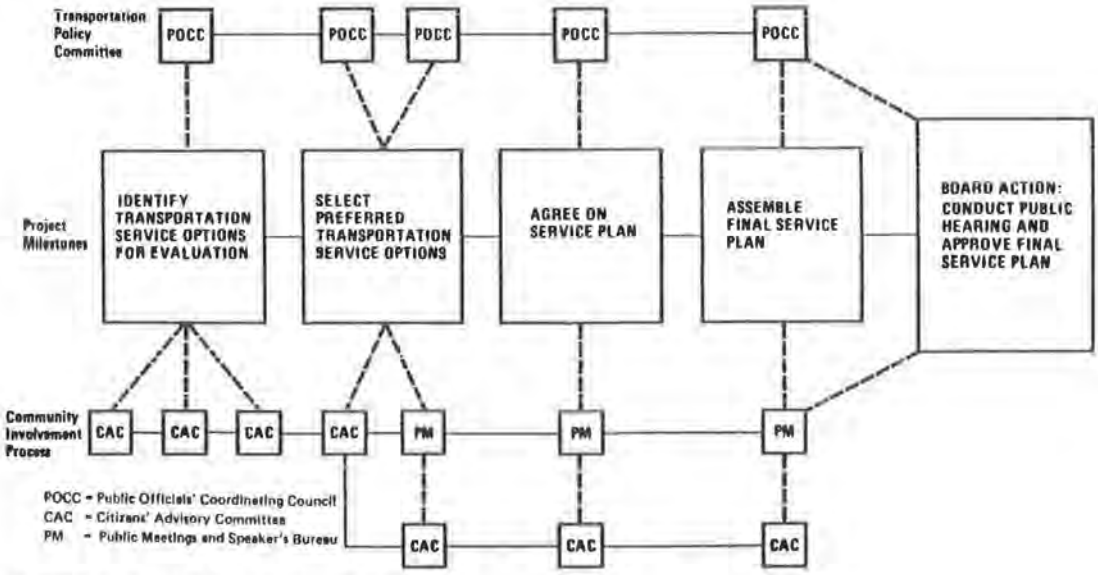

FIGURE 6 Service Plan Milestone Development.

- Select preferred transportation service options,
- Agree on service plan,
- Assemble final service plan, and
- Conduct public hearing and approve final service plan.

The process provided the Capital Metro Interim Board with the following four sources of advice before acceptance of a service plan:

- Citizens, through the Citizen's Advisory Committee and grass-roots public involvement activities;
- Elected officials, through the Public Officials Coordinating Council;
- The board's own executive director and staff; and
- The board's consultants.

Additional public input came from two surveys conducted in May 1984. The first, a study of Austin Transit System riders, asked transit users about their existing service opinions and desired improvements. It also contained questions on demographic characteristics and final transit origins and destinations (useful also in technical tasks such as ridership forecasting and route planning). The second survey approached a random sample of households in the Capital Metro service area and asked a series of questions about various transportation- and traffic-related issues (also useful in gauging potential voter support).

Service Development Plan

The service plan that evolved from the foregoing process outlines a series of short-term and long-term transit improvements for Capital Metro's service area. It represents a commitment to expanded and enhanced transit services throughout the Austin region and sketches an extensive program of improvements extending into the next century.

The Short-Term Improvement Program includes transit improvements that can be implemented by 1988: an improved bus system, expanded paratransit services, and an expanded ridersharing program. Because Austin is becoming the fastest growing city in Texas (and perhaps in the country), the short-term plan had to stress immediate improvements. Thus a fivefold increase in the bus fleet, expansion to a regional service area of more than 1,000 mi^2 (2592 km^2), 177 mi (285 km) of express service, and much more are planned during the Authority's first 3 years. However, in addition to this ambitious short-term program, an equally ambitious long-term program--including the possibility of light rail--is also planned.

Figure 2 shows the 10 travel corridors selected to be studied for long-term high-level transit improvements. The next phase of planning, alternatives analysis, has begun on the Guadalupe-Lamar corridor, which has been identified as a high-priority corridor in the service plan. Light rail is one of the leading technologies being considered in this study.

Major Planning Considerations

In the first part of this paper some of the primary reasons for which a city the size of Austin is looking at light rail were enumerated. A few points merit emphasis and elaboration. Of particular importance is that a rare opportunity may exist in Austin, which, although growing quickly (43 percent during the past 10 years), still has a metropolitan population of only 600,000. Thus Austin can look at Canadian and Euopean cities, which have planned transit systems to complement land use and transportation needs, and use transit as a powerful tool to manage and guide future growth. Growth management is a critical issue in Austin; unlike the situation in other Texas cities, serious land use planning has begun in order to provide such management of future growth. Transit is viewed as one tool that can be used to implement the growth management plan being developed for Austin.

Will Austinites use light rail or other forms of "express transit"? As noted earlier, sketch-planning work done by Parsons, Brinckerhoff, Quade and Douglas indicates that ridership estimates in the Guadalupe-Lamar and several other corridors warrant consideration of light rail. This determination is not difficult to understand when it is remembered that Austin has not kept pace with the rest of urban Texas in highway construction. During the 1960s and 1970s a number of efforts to pass local bonds for roadways were defeated, partly out of a desire to restrain growth. In addition, few state-level highway dollars were committed to Austin because of opposition to new highway construction on the part of key Austin area legislators. The result has been fewer highway lane-miles per capita than there are in most other Texas cities. Meanwhile, coupled with the extraordinary population growth of recent years, congestion has reached near-crisis proportions on most major Austin arteries. Vehicle registration has increased by more than 70 percent in the last 10 years, and congestion has increased by more than 100 percent. A doubling of area traffic is projected before the year 2000.

Austin now has the opportunity to implement some form of express transit, a complement to other necessary transportation improvements. Although new highway construction is clearly needed, the expansion of the highway system can be balanced with express transit construction to avoid such massive highway investments as were made in Houston, Dallas, and similar major cities.

Confirmation Election: Key Issues

These concepts were put to the crucial test on January 19, 1985, in the election to confirm or reject creation of Capital Metro and its ambitious service plan. And by a margin of nearly 60 percent Austin area voters approved the proposals. This was indubitably an important victory for public transit, not to be gainsaid; yet it was also not without its weak points, and it is valuable to subject these to some closer scrutiny in hopes that future mistakes, both in Austin and in other localities, will be minimized.

Capital Metro was approved in the city of Austin proper and in several important but small outlying municipalities. It unfortunately failed to pass in Travis County (of which Austin is the county seat) and in several fairly large suburban municipalities.

In many respects voter turnout was a critical factor in the character of the vote: almost across-the-board Capital Metro passed wherever turnout was high. Turnout in the city of Austin--where the proposal passed by a comfortable margin--was especially high, perhaps reflecting the expenditure of approximately 90 percent of campaign funds on this target area. Also, in Austin proper there was no confusion over who could vote in the election. In contrast, in the surrounding county and in other areas there was considerable confusion as to who could vote for what, which caused may voters to simply stay home.

Likewise, where the pro-Metro campaign was

focused (through public involvement programs, speakers' bureau activities, and so forth), the vote tended to go extremely well for the proposal. Within the city of Austin the campaign was probably run as well as humanly possible; for example, a particularly dramatic advantage was obtaining a former Austin mayor, a well-known community leader, and respected woman opinion-molder to spearhead the campaign committee--a development that brought substantial credibility to the campaign.

On the other hand, the campaign seemed to fall short in focusing on the issues outside the city of Austin. In Travis County the proposal lost 52 to 48 percent in the aggregate of 5 voting units. However, even here the nature of the vote exhibits some redeeming qualities: the vote was extremely close in three of the county voting units, and the pro-Capital Metro vote totally swept an additional unit.

In addition to the loss in Travis County, another major disappointment was the defeat of Capital Metro in Round Rock, the largest suburban municipality, located just north of the city of Austin. Low voter turnout, which probably indicated a leery "wait-and-see" attitude, plus some residual anti-Austin feeling (exemplified by newspaper editorials in the vein of "Let's not make another of Austin's mistakes") undoubtedly were major factors in the negative vote here. Yet, in financial and operational terms, the loss of Round Rock might actually turn out to be a gain for the authority, because the lost tax revenue will not equal even 1 percent of the total; furthermore, Round Rock residents currently spend more than 75 percent of their sales tax-producing dollars in the city of Austin. Thus, in effect, Round Rock residents will be paying most of the new tax but will not be directly acquiring the new transit service for their area.

Despite these drawbacks, why did Capital Metro succeed? First, Austin was ready for a regional authority: the transportation problems in the area were clearly regional in scope. Despite Austin's hesitancy to provide highway and other infrastructure improvements to accommodate growth, growth occurred anyway, both inside and around the city's limits.

Second, Austin has always considered itself the most progressive city in Texas. Dallas, Houston, Ft. Worth, and San Antonio have already established metropolitan transportation authorities, and Austin has recognized that it has had an opportunity to create its own authority before traffic problems become as serious as they are in these other cities.

Finally, the decision to rely heavily on community involvement and on striking a balance between short- and long-term improvements has built up public confidence in the plan. Realistic time frames have been used in discussing light rail and express transit. Thus people in the region have not felt that the authority was promising service it could not deliver in the short term. However, a true commitment to long-term improvements was also perceived by Austinites.

Although it is still technically undetermined whether Austin will install a light rail system, the planning process used to date has certainly set the stage for future express transit development. It is hoped that other Sun Belt cities of Austin's approximate size will find this process helpful in the development of their own transit systems.

REFERENCES

1. Wilbur Smith & Associates. State of Texas Public Transportation Development Manual. Texas Mass Transportation Commission, Austin, 1971.
2. L. Henry. CARTRANS: High Speed Transit for the Texas Capital--A Preliminary Feasibility Study for a Capital Area Rapid Transit System. Texas Association for Public Transportation; Rail Foundation, Washington, D.C., 1973.
3. Report on Transportation System Alternatives: Computer Modeling Analyses. Austin Transportation Study Office, Austin, Tex., Jan. 1976.
4. L. Henry. Preliminary Feasibility Study for a South Austin Light Rail Transit Demonstration Line. Texas Association for Public Transportation, Austin, 1976.
5. Long-Range Transportation Plan for Austin/Travis County. Austin Transportation Study Office, Austin, Tex., 1979.
6. Proposed Central Area Shuttle System: Preliminary Alternatives Analysis. Austin Department of Urban Transportation, Austin, Tex., Aug. 1979.
7. Capital Metro Service Plan. Barton-Aschman Associates, Inc., Evanston, Ill.; Capital Metropolitan Transportation Authority, Austin, Tex., Nov. 1984.
8. Analysis of Long Range Transit Improvements for the Guadalupe-North Lamar Corridor. PRC Engineering, Fort Worth, Tex; City of Austin, Tex., Sept. 1984.
9. Travel Demand Analysis: Alternatives Tested, Model Runs, and File Inventory. Supplement to Travel Forecasting Methodology. Barton-Aschman Associates, Inc., Evanston, Ill., Oct. 1984.
10. L. Henry. Alternative Light Rail Transit Alignment for North Express Corridor in Austin, Texas: Cost/Ridership Analysis (projected 1990). Texas Association for Public Transportation, Austin, Nov. 1984.