FATIGUE TESTS OF BOLTED CONNECTIONS DESIGNED BY SHEAR-FRICTION

B. G. Rabbat and N. W. Hanson, Portland Cement Association

For the elevated structure of Metropolitan Atlanta Rapid Transit Authority's (MARTA) system, bolted connections were designed to provide composite action between the precast concrete deck slab units and the main longitudinal girders. The connections were designed using the shear-friction procedure described in Section 11.15 of the 1971 ACI Building Code. Pretorqued bolts were used as "reinforcement". The paper describes tests of 16 specimens that simulated the joint between the deck and the girder of the MARTA structure. Controlled variables included use of concrete girder, steel girder, different size bolts and different types of grout between deck and girder. The specimens were subjected to repeated loads of either 2 or 5-million cycles. These tests provided a means for determining the behavior of the bolted connection under repeated loading. The test results are compared with values calculated according to the shear-friction concept. Design recommendations are presented.

Highlights

For the elevated structure of Metropolitan Atlanta Rapid Transit Authority's (MARTA) system, bolted connections were designed to provide composite action between precast concrete deck slab units and the main longitudinal girders. The connections were designed to resist the horizontal shears using the shear-friction procedure described in Section 11.15 of the 1971 ACI Building Code (1). The shear-friction procedure states that shear stresses along an assumed crack may be resisted by frictional stresses. The frictional stresses are calculated as the product of the normal stresses that prevent opening of the crack, and a coefficient of friction characteristic of the materials on each side of the crack. The normal stresses are developed by "reinforcement" across the assumed crack.

The connection detail designed for the MARTA system employed pretorqued high-strength bolts as "reinforcement". Besides practical considerations such as ease of installation, these bolts were expected to produce the following additional benefits:

1. A clamping force was provided to maintain compression in the grout layer between girder and deck slab. This ensured composite action of the girder and deck slab.
2. The pretorquing of the bolts tended to eliminate stress changes and minimize fatigue effects.

Existing experimental data on connections designed by shear-friction cover the cases of static loading to destruction. These appeared adequate for load factor designs of members subjected to relatively low number of loading cycles. However, no data existed concerning the integrity of these connections under repeated loads approaching 5-million repetitions.

This paper describes 16 test specimens that simulated the joint between the precast deck and the girder of the MARTA structure. The specimens were subjected to repeated loads of either 2 or 5-million cycles. The tests provided a means to determine the behavior of the connection under repeated loading.

Conclusions

1. Slip occurred prior to or during repeated loading as a result of breaking of the bond at the joint surface. The amount of slip increased with increasing number of cycles. However, the rate of slip decreased with increasing number of cycles.
2. The load at initial bond slip increased as the precompression of the joint surface increased.
3. The amount of initial bond slip decreased as the precompression increased.
4. All specimens that survived the repeated loading tests also resisted increasing static load up to a maximum slip of about 25-mm (1-in.) without sudden failure. The load versus slip relationship was parabolic with a steady loss of stiffness with increasing load.
5. Load capacity after 5-million cycles was reduced by an average of 5% as compared to specimens subjected to 2-million cycles. The maximum reduction was 14%.

Recommendations

Based on the test results and the conclusions outlined above, it is recommended that:

1. The bolts should be debonded over their entire length prior to torquing to ensure an effective prestress.
2. The coefficient of friction used for shear-friction design of bolted connections should be 0.7 for both precast concrete to precast concrete and precast concrete to rolled steel surfaces. The design yield strength of the bolts should not exceed 414 MPa (60 ksi), even if the yield strength of the bolts is higher.

Experimental Program

This section describes the procedure used to manufacture and test the specimens.

Test Specimens

The test specimens as shown in Figs. 1 and 2 consisted of a portion of concrete deck slab grouted and bolted to a portion of the girder. The girder portion represented either a concrete or structural steel beam. Details of all specimens are listed in Table 1. Test loading consisted of a fatigue test with repetition of specified loads followed by a static test to destruction. All loadings subjected the specimen to a sliding shear along the joint between the deck and girder portions. The minimum and maximum loads were predetermined for the MARTA system and specified by the Sponsor.

Specimens designated as Type C specimens consisted of a deck slab and a concrete girder. Specimens designated as Type S consisted of a deck slab and a steel girder.

In the specimen designation, the number following the C or S indicates bolt diameter in 3.2-mm (1/8-in.) multiples. Each specimen with the designation mark "-2" indicates repeated loading for 2-million cycles. The mark "-5" indicates repeated loading for 5-million cycles. The small letter "e" preceding the dash in the mark indicates specimens in which epoxy grout was used at the interface between the deck and girder portions.

Manufacture of Specimens

Concrete Girder. The reinforced concrete girder portion shown in Fig. 1 was cast with the joint contact surface at the bottom of the form. A stainless steel form-liner on the bottom ensured a smooth joint surface on some girders. The form-liner was later sandblasted to produce a rougher surface on other girders. Table 1 identifies the joint surface condition of the girders.

Bonding of the bolts to adjacent concrete and grout was allowed in some specimens and prevented in others. In the C9 specimens, the bolts were used in the same condition as received from the manufacturer. In the C9e specimens, the portion of bolts outside the girder part was coated with a thin layer of grease. In concrete girders C10, C11 and C12, bond was prevented over the full bolt length by tightly wrapping the bolts with a thin sheet of polyethylene. Rotation of the bolts during assembly was prevented by welding the head of the bolts to the girder steel plate with fillet welds.

Concrete compressive strength of each element was obtained from the average of three 150x300-mm (6x12-in.) concrete cylinders. At test time, the concrete strength ranged between 35.2 and 49.6 MPa (5100 and 7200 psi, respectively).

Steel-Girder. The steel girder is shown in Fig. 2. Prior to assembly, the steel joint contact surface was cleaned following the procedures of SSPC-SP3-63 (2), Power Tool Cleaning. To produce field practice, the cleaning was not carried to perfection.

Bond of the bolts to the adjacent grout was prevented in two ways. In the S12 specimens the bolts were greased. In the S10 and S11 specimens the bolts were covered with a thin sheet of polyethylene.

Concrete Deck Slab. The reinforced concrete deck slab shown in Figs. 1 and 2 was cast with the joint contact surface at the bottom of the form. A stainless steel form-liner on the bottom ensured a smooth joint surface on some deck slabs. The form-liner was later sandblasted to produce a rougher surface. Table 1 identifies the joint surface condition of the deck slabs.

Concrete compressive strength was obtained from the average of three 150x300-mm (6x12-in.) concrete cylinders. At test time the concrete compressive strength ranged between 34.5 and 50.3 MPa (5000 and 7300 psi, respectively).

Assembly of Specimens

Two types of grout were used between deck and girder elements:

1. High strength, non-shrink grout
2. Epoxy grout

The compressive strengths of both grouts were obtained from tests of 51-mm (2-in.) cubes. At test time the cube strength of the non-shrink grout ranged between 48.3 and 57.2 MPa (7000 to 8300 psi, respectively). The cube strength of the epoxy grout ranged between 51.7 and 55.2 MPa (7500 to 8000 psi, respectively).

In the specimens where non-shrink grout was used, the joint surfaces were sprinkled with water 1/2-hour before the grout was mixed. Excess water was brushed away.

When epoxy grout was used, the joint contact surfaces were lightly wire brushed to remove any form oil, laitance, or other material which could prevent bond between the grout and the concrete.

To assemble the specimen, the girder portion was positioned with the joint surface horizontal and upward. The grout was prepared and placed on the contact surface in a layer with a thickness of more than 6.35-mm (1/4-in.). The deck slab was then placed over the bolts and in contact with the plastic grout. Excess grout was squeezed out until the deck rested on 6.35-mm (1/4-in.) spacers. In all specimens the contact area grouted was the full width of the girder portion over a length of 0.915-m (3-ft).

In all specimens, the blockout portion below the steel plate in the deck slab was then filled with non-shrink grout packed thoroughly by means of a compacting rod. The upper bolting plate was placed in position and the nuts finger tightened.

When the grout attained a compressive strength of 27.6 MPa (4000 psi), the bolts were tensioned to

60% of their yield stress of 558 MPa (81 ksi) by applying torque in increments to the nuts.

The calculated torques (3) for a bolt stress of 335 MPa (48.6 ksi) are listed in Table 2. All threads and washers were cleaned and lubricated with grease before torquing.

Testing Procedure

Initial Static Test. The specimen was positioned in the loading frame with the joint contact surface vertical as shown in Fig. 3. The base of the girder portion rested on a high strength plaster leveling course on the bed of the frame. Two 490 kN (50 ton) loading rams located above the specimen and 0.915-m (3-ft) apart, applied the load to the specimen through a rigid steel cross beam.

A dial gage was attached at mid-height of the joint on each side of the specimen to measure joint slip. The average change of the dial readings is reported as slip.

The specified maximum load, P_{max}, shown in Table 1 was applied to each specimen. The relative slip of the deck with respect to the girder was recorded at increments of 44.5 kN (10 kips). Maximum load was sustained for 3 minutes and the slip was again recorded. The applied load was then reduced to the specified minimum repeated load in preparation for the repeated load test.

Repeated Load Test. The applied load was varied from the minimum P_{min}, to the maximum force, P_{max}, specified in Table 1. The loading rate was 500 cycles per minute. The cyclic loading was applied continuously for either 2 or 5-million cycles.

Except for the C9 and S12 specimens in which the slip gages were removed during the repeated loading tests, gages were left attached to the specimen. Slip was recorded at least once a day together with the number of cycles completed.

Static Test to Destruction. Static tests to destruction were performed in a 4.45-MN (1-million-lb) testing machine. The specimen was positioned with the joint contact surface vertical as shown in Fig. 4. The base of the girder portion rested on a thin sheet of plywood on the lower bed of the machine. The movable loading head of the machine contacted the deck slab element through a high strength plaster leveling course. The joint contact area of the specimen was centered with respect to the loading head. The slip gages were reset to make use of their maximum travel.

Load was applied in increments. In the early stages of loading, slip was recorded in increments of 89 kN (20 kips). At higher loads the slips were recorded in increments of 44.5 kN (10 kips). In most of the specimens, the static load was sustained for a short time at two different load levels in order to observe the crack patterns. In such a case, slip was also recorded at the end of the period, together with the length of time the load was sustained. The test was terminated when the total slip space was exhausted. This maximum slip was about 25-mm (1-in.) for the concrete to concrete specimens and about 32-mm (1-1/4-in.) for steel to concrete specimens.

Test Results and Discussion

Specimens C9 and C9e broke prematurely prior to application of the specified maximum repeated loads. Therefore the results of these specimens are excluded from the analyses. All other specimens survived the repeated load test and were loaded to destruction.

Initial Bond Slip at the Joint Surface

Specimen C9-5 was not subjected to the initial static test and the bond broke at the joint surface during application of the repeated loads. Bond broke at the joint surface of Specimens C9-2, C9e-2 and C9e-5 during the initial static test.

For the C9 and C9e specimens, excessive initial bond slip occurred at low loads. The size of the bolts of these specimens was smaller and the torquing of the bolts was probably ineffective because of the bond of the bolts with the adjacent concrete and grout.

In Specimens C10, C11 and C12-2, bond broke at the joint surface during the static test to destruction. In C12-5 it occurred after 1 day of repeated loading.

In all the steel to concrete specimens, the bond broke at the joint surface during the initial static test.

A summary of the loads and stresses at which the bond broke at the joint surface is given in Table 3. Shear stress at failure is calculated as the applied load divided by the joint surface area. The concrete to concrete "C" specimen had a contact area of 0.465 sq.m (720 sq.in.), while the steel to concrete "S" specimens had a contact area of 0.290 sq.m (450 sq.in.).

The load at initial bond slip tends to increase with prestress in each specimen type. However, the relationship cannot be defined precisely with the limited amount of data.

Table 3 summarizes joint slip that occurred during the initial static and repeated load tests. During the initial static test, slip was recorded as the load reached the specified maximum force. Slip was again recorded after the specified maximum load had been sustained for 3 minutes. Slip was also recorded after the specimen had survived 2 or 5-million cycles.

Data in Table 3 shows that generally the "C" specimens exhibited very little slip, while the "S" specimens had a substantial slip. When the bond broke before or during the cyclic test, e.g., all "S" specimens, the slip increased during the repeated loading test.

Slip During the Static Test to Destruction

Load versus slip curves obtained during the static tests to destruction are shown in Figs. 5 and 6 for the "C" and "S" specimens, respectively. The slip plotted in these figures do not include any permanent movement that occurred during the initial static and repeated load tests. Generally, the specimens previously subjected to 5-million cycles of loading indicate reduced load at larger deformations than for companion specimens loaded to only 2-million cycles.

Strength by the Shear-Friction Procedure

According to Section 11.15 of ACI 318-71 (1), the strength of a joint by shear-friction is:

Figure 1. Type "C" specimen.

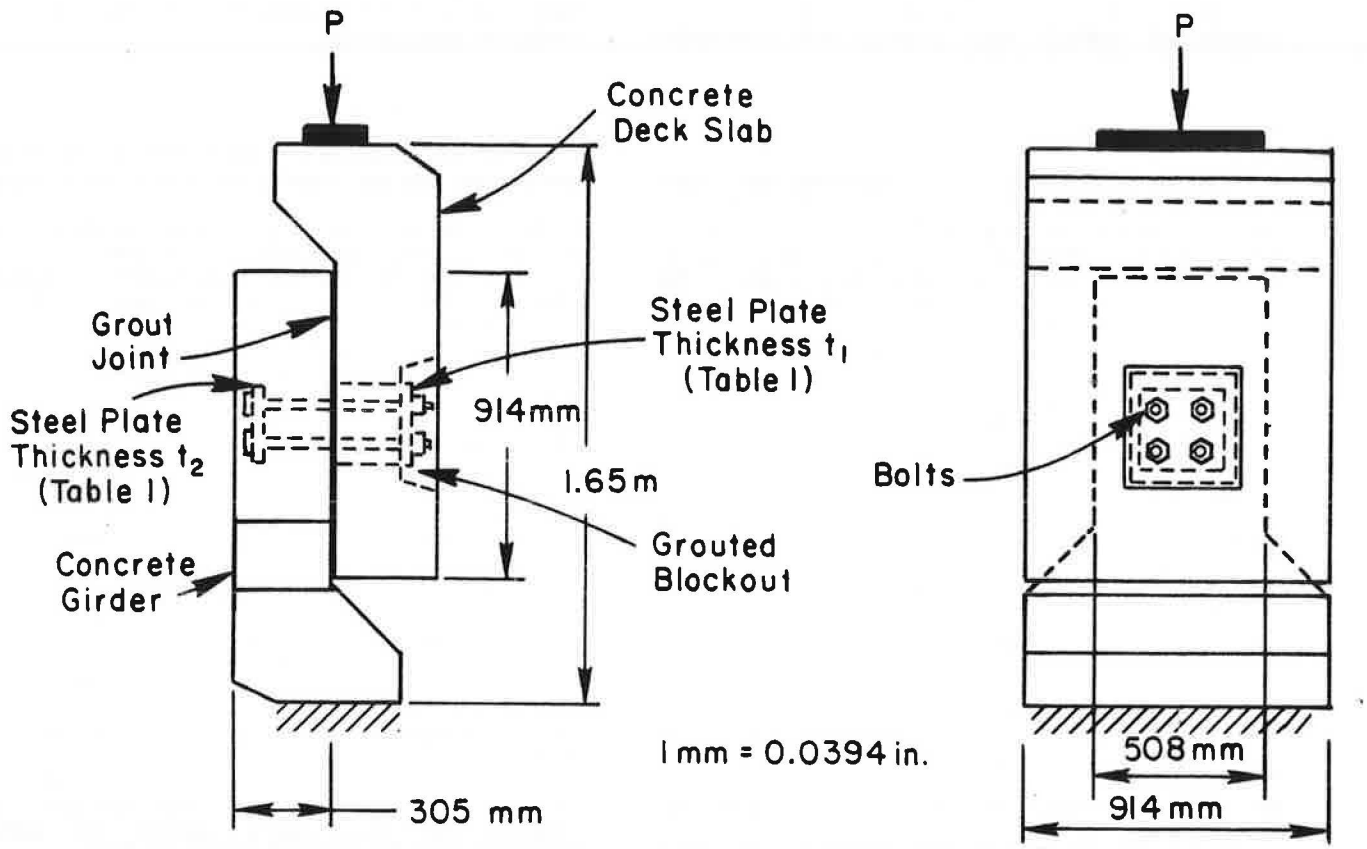

Figure 2. Type "S" specimen.

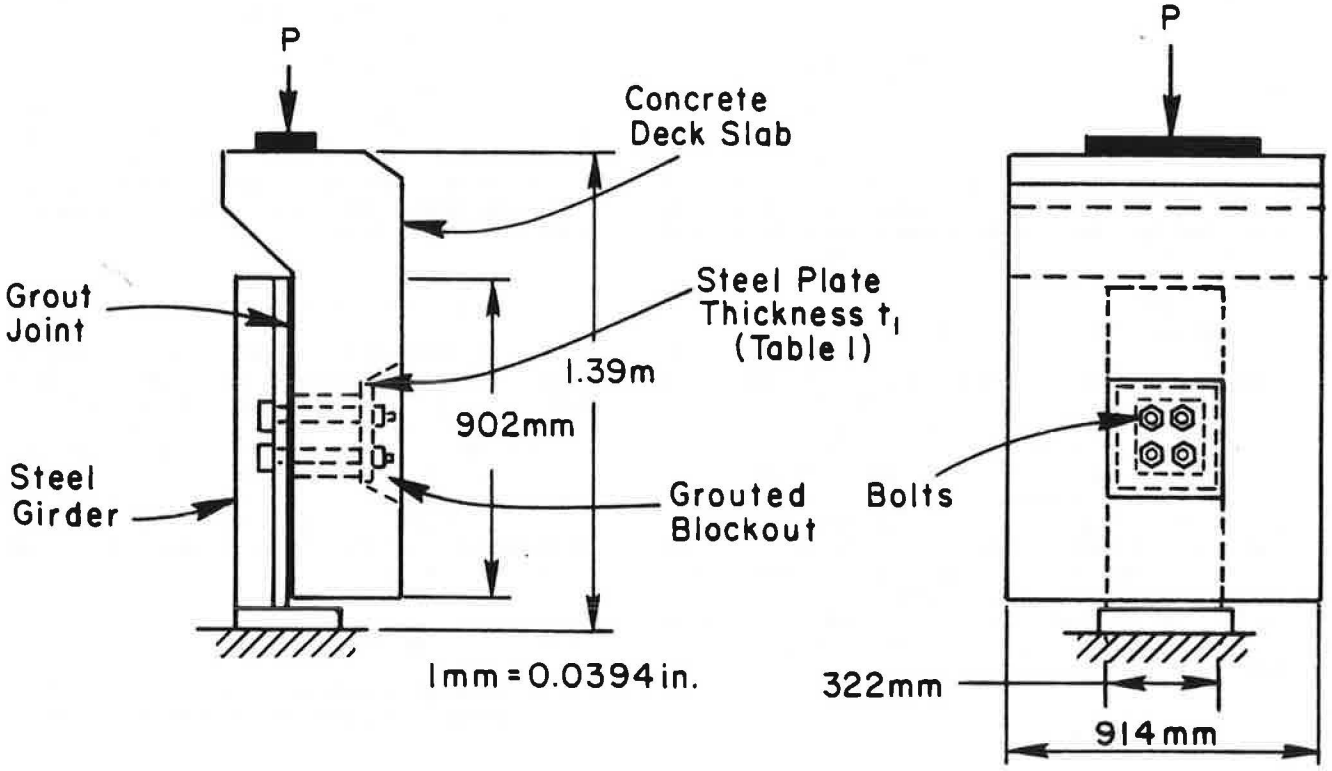

Table 1. Test specimens.

Specimen	Bolt Size (mm)	Plate Thickness (mm)		Repeated Load (kN)		Bolt in Blockout	Concrete Joint Surface
		t_1 (deck)	t_2 (girder)	P_{min}	P_{max}		
C9-2	28.6	31.8	28.6	200	600	bonded	smooth
C9-5	28.6	31.8	28.6	200	600	bonded	smooth
C9e-2	28.6	31.8	28.6	200	600	unbonded*	smooth
C9e-5	28.6	31.8	28.6	200	600	unbonded*	smooth
C10-2	31.8	41.3	38.1	111	400	unbonded	rough
C10-5	31.8	41.3	38.1	111	400	unbonded	rough
C11-2	35.0	47.6	44.5	178	556	unbonded	rough
C11-5	35.0	47.6	44.5	178	556	unbonded	rough
C12-2	38.1	50.8	47.6	200	600	unbonded	rough
C12-5	38.1	50.8	47.6	200	600	unbonded	rough
S10-2	31.8	41.3	-	133	423	unbonded	rough
S10-5	31.8	41.3	-	133	423	unbonded	smooth
S11-2	35.0	47.6	-	178	512	unbonded	rough
S11-5	35.0	47.6	-	178	512	unbonded	smooth
S12-2	38.1	50.6	-	222	645	unbonded*	smooth
S12-5	38.1	50.8	-	222	645	unbonded*	smooth

*Unbonded using grease - All other bolts unbonded using thin polyethylene sheet.

NOTE: 1 mm = 0.0394 in.
1 kN = 0.225 kip

Table 2. Applied torques.

Bolt Size		Torque	
(mm)	(in.)	(N.m)	(ft. lb)
28.6	1-1/8	698	515
31.8	1-1/4	976	720
35.0	1-3/8	1315	970
38.1	1-1/2	1729	1275

Table 3. Joint bond failure and joint slip.

Specimen Mark	Initial Bond Slip		Joint Prestress* (MPa)	Joint Slip (mm)		
	Load (kN)	Shear Stress (MPa)		Initial Static Load	Initial +3 min.	After Repeated Loading
C9-2	436	0.94	1.86**	-	-	-
C9-5	534	1.14	1.86**	-	-	-
C9e-2	578	1.24	1.86**	1.820	2.222	-
C9e-5	445	0.96	1.86**	2.960	3.454	-
C10-2	654	1.41	2.28	0.003	0.005	0.008
C10-5	721	1.55	2.28	0.005	0.008	0.010
C11-2	796	1.71	2.75	0.005	0.005	0.005
C11-5	645	1.39	2.75	0.013	0.013	0.013
C12-2	685	1.47	3.30	0.010	0.010	0.025
C12-5	+	+	3.30	0.010	0.010	1.130
S10-2	365	1.25	3.65	1.200	1.270	1.980
S10-5	374	1.28	3.65	1.450	1.540	1.960
S11-2	+	+	4.40	0.140	0.157	1.140
S11-5	512	1.76	4.40	0.419	0.437	1.820
S12-2	534	1.83	5.85	0.673	0.737	-
S12-5	445	1.53	5.85	1.550	-	-

*Intended bolt force divided by joint surface area.
**Actual value is probably much less since bolts were bonded.
+Bond failure during repeated loading.

NOTE: 1 kN = 0.225 kip
1 MPa = 145 psi
1-mm = 0.0394-in.

Figure 3. Repeated load test setup.

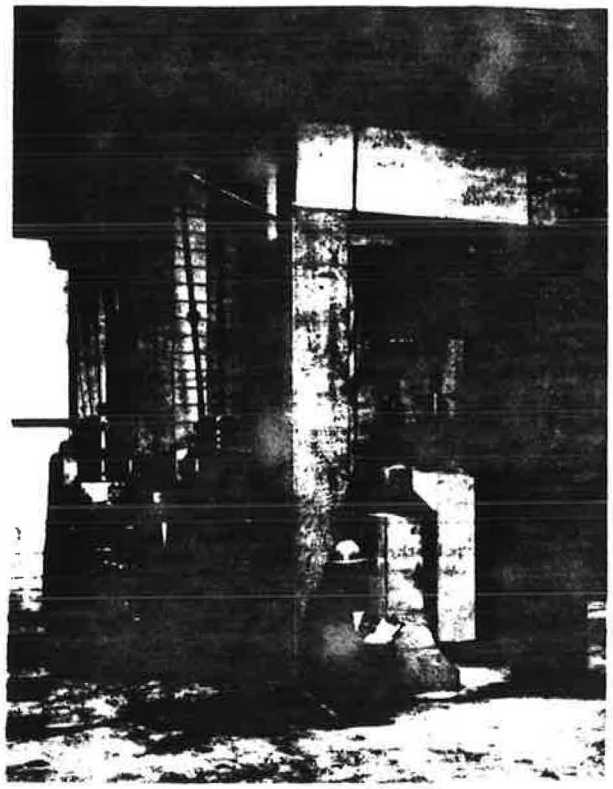

Figure 4. Setup for static loading to destruction.

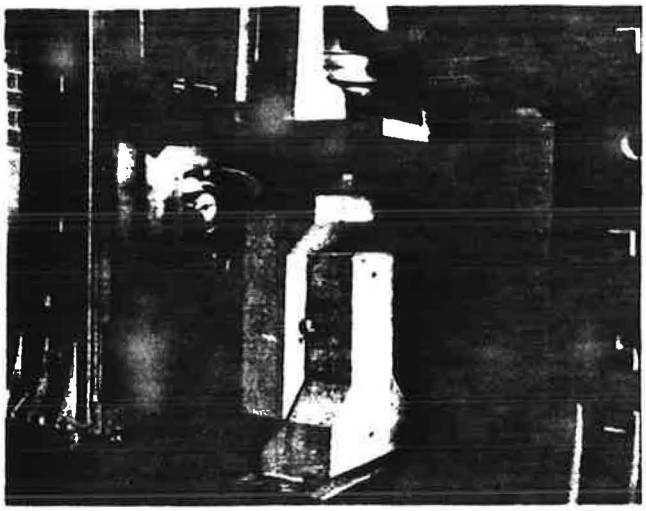

Figure 5. Load versus slip during static test to destruction for the "C" specimens.

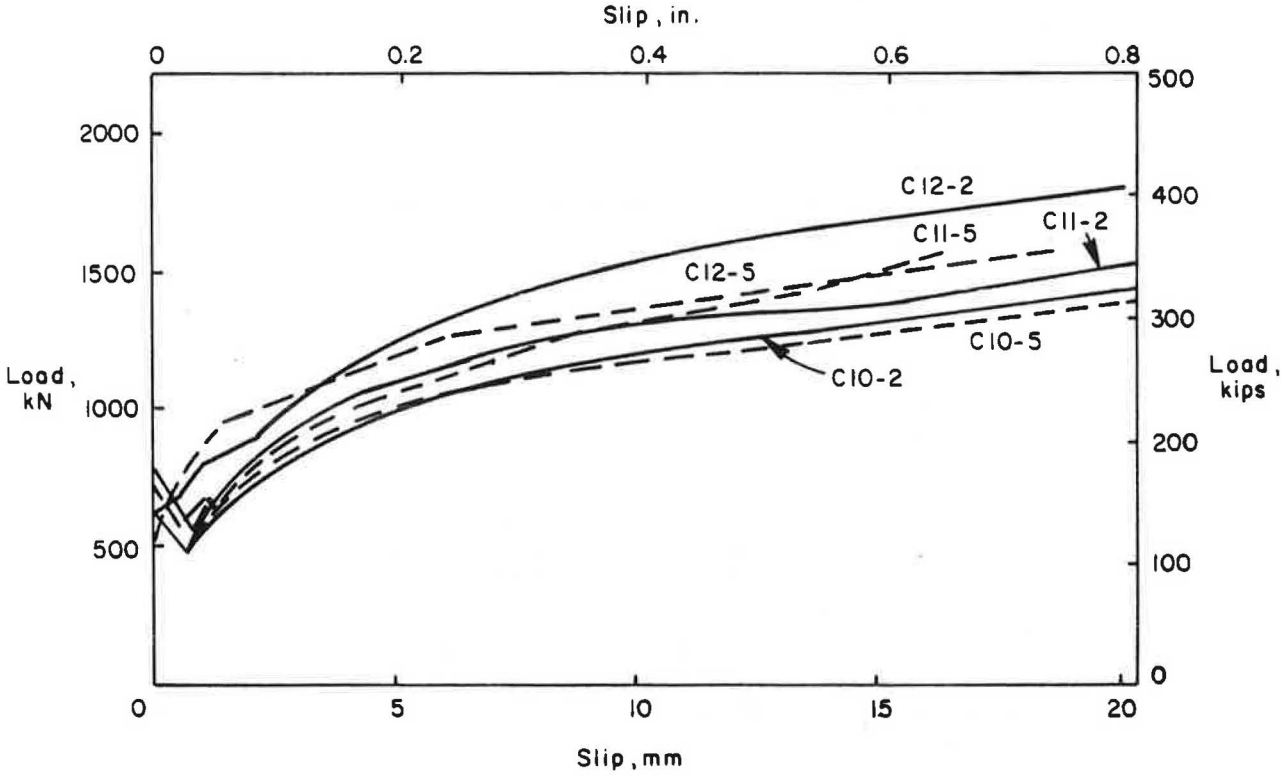

Figure 6. Load versus slip during static test to destruction for the "S" specimens.

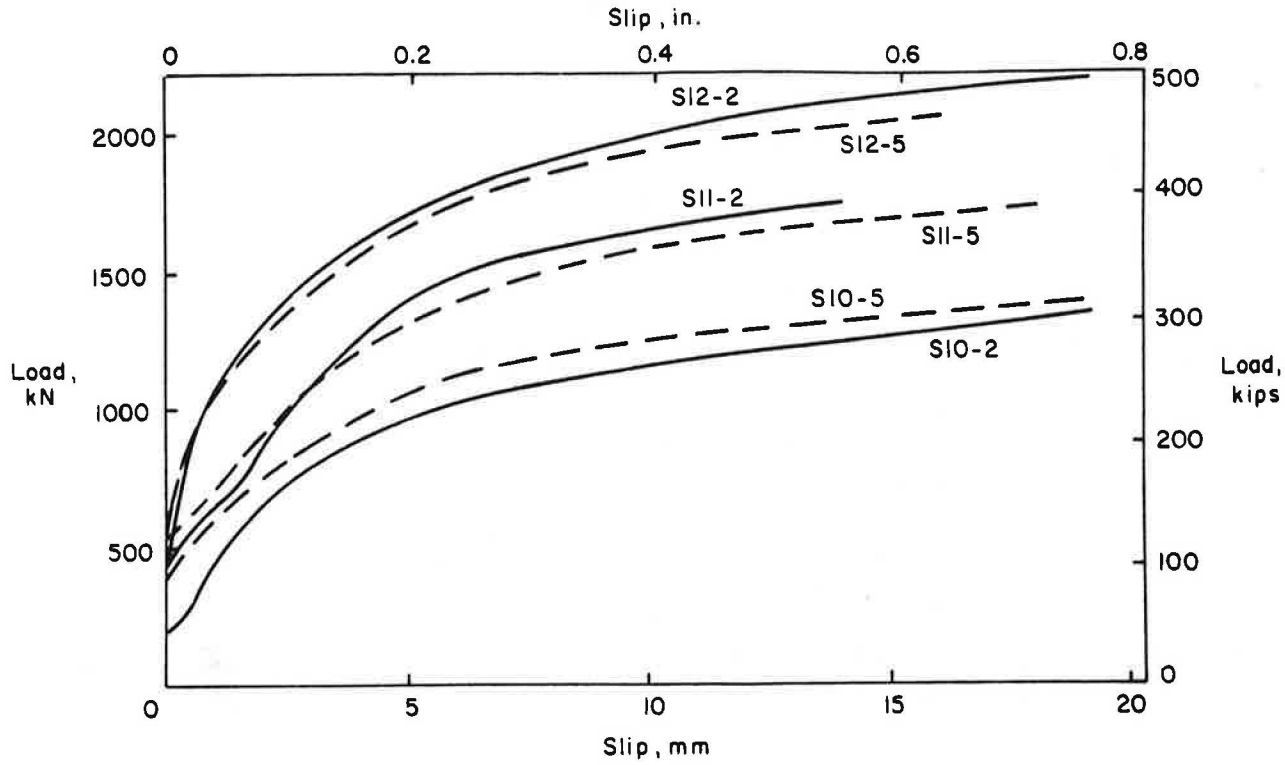

Figure 7. Experimental versus calculated strength.

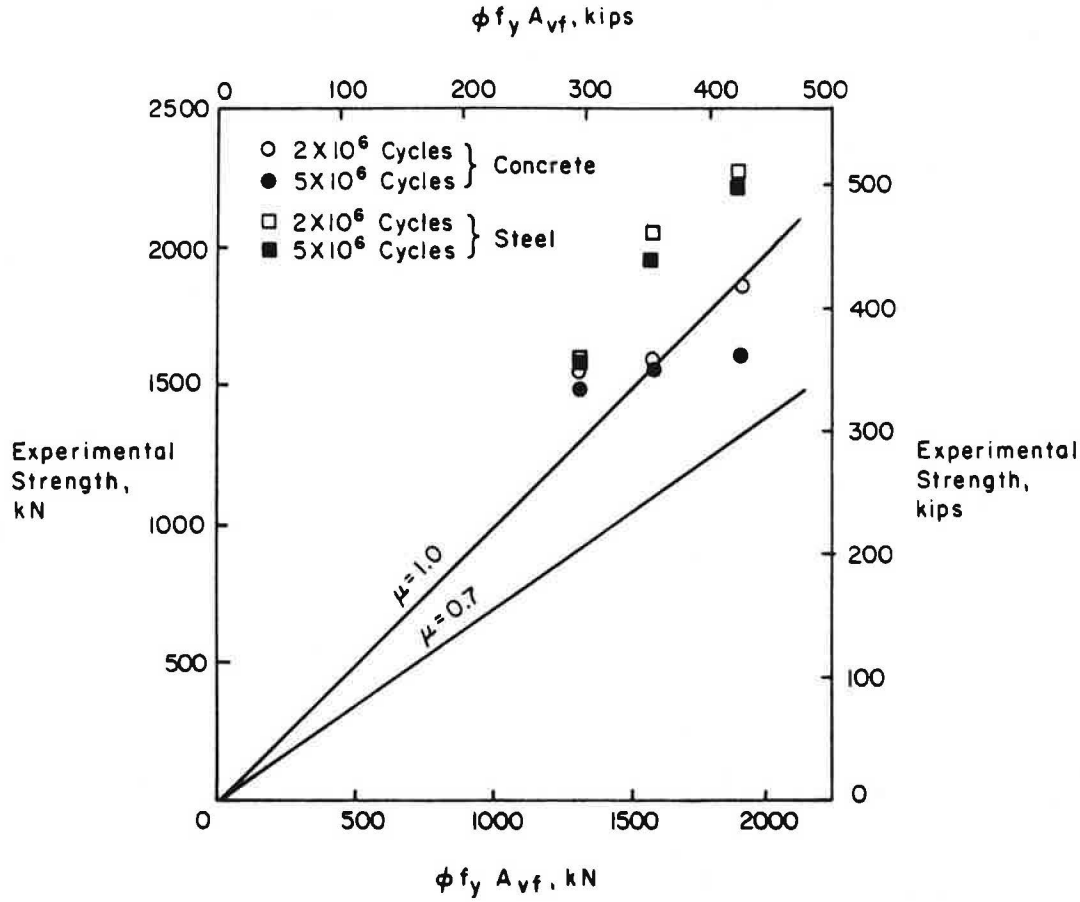

$$V_u = \Phi f_y A_{vf} \mu$$

where

V_u = the total applied design shear force
Φ = a capacity reduction factor
f_y = the specified yield strength of non-prestressed reinforcement
A_{vf} = area of shear-friction reinforcement
μ = the coefficient of friction

In the ACI Code (1), the specified coefficients of shear-friction apply to concrete cast monolithically, to concrete placed against hardened concrete, and to concrete placed against as rolled structural steel. Also, in calculating the area of the shear-friction reinforcement, the shear-friction formula stipulates that the specified yield strength is that of non-prestressed reinforcement and shall not exceed 414 MPa (60 ksi).

In the specimens tested, precast concrete was bolted to either precast concrete or rolled structural steel. Moreover, the bolts (shear-friction reinforcement) were pretorqued.

In spite of the above differences, the experimental maximum static load is plotted versus the yield strength of the bolts in Fig. 7. The yield strength of the bolts is computed assuming that for all specimens $\Phi = 1.0$, and $f_y = 414$ MPa (60 ksi), maximum value allowed by the present code. The shear-friction equation is also plotted in Fig. 7 for the specified coefficients of friction; $\mu = 0.7$ for concrete cast against rolled steel and $\mu = 1.0$ for concrete cast against concrete.

The plot of Fig. 7 indicates that a coefficient of friction of 0.7 for concrete on rolled steel produces a conservative estimate of strength. It will be recalled that the experimental load is defined as the load that corresponds to an arbitrary slip value of about 25-mm (1-in.). Data for concrete on concrete with the coefficient of 1.0 indicates a satisfactory prediction of strength after 2-million cycles. The additional loss in stiffness resulting from 5-million cycles of loading further reduced the strength and in one case resulted in low experimental loads.

With a coefficient of friction of 0.7 for concrete on concrete specimens, the ratio of test to design loads ranged from a maximum of 1.68 to a minimum of 1.21.

Smooth Versus Rough Interface Surfaces

A limited comparison of the effect of the surface roughness at the interface can be made through the S10 and S11 specimens.

Specimens S10-5 and S11-5 had smooth surfaces while Specimens S10-2 and S11-2 had rough surfaces. A comparison of the slip in Table 3 and Fig. 6 reveals that the surface roughness of the specimens used in this investigation did not affect the behavior.

Concluding Remarks

Test specimens representing a bolted connection between concrete and concrete or concrete and steel were subjected to repeated loads for 5-million cycles without failure. Prestress in the joint produced by torquing the nuts to a specified torque enabled the specimens to survive the repeated loading without excessive slip. However, positive treatment is necessary to debond the bolt from surrounding grout so that tension is developed in the full length of the bolt during torquing.

Conclusions and design recommendations based on this investigation appear at the beginning of the paper. Subsequent to this investigation, the steel to concrete design was modified for use in the actual structure.

Acknowledgments

This paper is based on an investigation sponsored by Parsons Brinckerhoff-Tudor-Bechtel, General Engineering Consultants to the Metropolitan Atlanta Rapid Transit Authority (MARTA), D. J. Mansfield, Manager of Engineering, Mike Viarnes, Structural Specialist. The investigation was financed in part through a grant from the U.S. Department of Transportation, Urban Mass Transportation Administration, under the Urban Mass Transportation Act of 1964, as amended, and in part by the taxes of the citizens of Fulton and DeKalb Counties of the State of Georgia. The experimental work was carried out at the Structural Laboratory of the Portland Cement Association under the direction of H. G. Russell, Manager, Structural Development Section and W. G. Corley, Director, Engineering Development Department. Particular credit is due G. B. Barney for getting the program started, and for R. C. O'Neill, Wm. H. Graves, B. Wm. Fullhart and R. K. Richter, for their assistance in the manufacture and testing of the specimens.

Disclaimer

References

1. "Building Code Requirements for Reinforced Concrete", ACI-318-71, American Concrete Institute, Detroit, November 1970, 78 pp.
2. "Surface Preparation Specifications - No. 3, Power Tool Cleaning", SSPC-SP3-63, Steel Structures Painting Council, October 1963.
3. Marks, L. S., Mechanical Engineers Handbook, Fourth Edition, McGraw-Hill Book Co., New York, 1941, p. 239.