In the industrialized countries, including the United States, there will be a continued concern for esthetics and environmental harmony. In urban areas, concern for safety will promote greater separation of vehicles and pedestrians, as by divided or separate bridges. However, as counterpressures of economy become significant, there probably will be some easing of environmental considerations. Nevertheless, close regulation of construction by federal and state authorities will remain, if not increase.

Costs of construction will rise dramatically in both the material and the labor sectors. To offset high labor costs, better and more automatic equipment will be developed and used. There will be more prefabricated and less on-site, labor-intensive construction. Conventional bridge materials, e.g., concrete and steel, will become more expensive and, at times and places, be in short supply. Efforts will be made to do more with less, e.g., by the use of higher-strength materials, optimum designing, and the use of recycled materials. The use of concrete rather than steel is expected to grow as concrete strengths become higher, and prestressed concrete will become favored over ordinary reinforced concrete. Some use of substitute materials, e.g., reinforced plastic, is also anticipated. The use of wood as a structural material for bridges will continue to be limited and, when it is used, will generally be as a pressure-treated laminate.

Electronic computers will penetrate further into almost every aspect of design, construction, and management. Analysis and design procedures will become more exact and complex, although the availability of standard computer programs will serve to make the operations more manageable. A shift to metric (SI) units is expected, first as a "soft" numerical conversion, then as a "hard" product conversion.

Research Needed

Only those subjects relating directly to the design and construction of bridges are listed. Also, the list is not represented as being complete. Rather, the issues are particular ones brought out by this study that may be of value to those concerned with bridges of the future. Unless a number of the research problems listed are resolved, the larger anticipated developments in bridge work are not likely to materialize, and so these research projects assume a very important role. Research on many of the items has already begun; however, since development and improvement are never-ending processes, all the items may be seen as future objectives to be reached:

1. Acquisition of reliable data about actual static and dynamic loads on bridges of different lengths and types, now and in the future;
2. Development of concrete with characteristics of high strength, light weight, and great durability at a reasonable cost, polymerized or nonpolymerized;
3. Development of noncorrosive reinforcing material for concrete, either coated steel or a nonferrous material like glass or plastic;
4. Developments in prestressing, particularly posttensioning, to reduce cost through simplification;
5. Improvements in welding procedures to reduce fracturing;
6. Development of low-cost substitute or recycled materials to replace conventional steel and concrete;
7. Development of standardized computer programs for reliable three-dimensional analysis and design of structures;
8. Development of less-labor-intensive ways to construct foundations, perhaps through prefabrication;
9. Improvements in methods of determining subsoil conditions;
10. Comprehensive study of structural forms and methods to optimize materials, energy, labor, and the like;
11. Development of maintenance-free discontinuities, e.g., joints and bearings;
12. Development of rapid repair methods for rehabilitating old bridges;
13. Development of a reliable structural adhesive;
14. Development of standardized short- to medium-span variable-length bridges;
15. Investigation of active control systems for long-span bridges;
16. Development of a solar-powered or other automatic system for deicing of decks (other than by salt); and
17. Establishment of practical ways to preserve selected historic bridges.

In forecasting any future, some surprises are expected; however, a consensus of authorities on the subject described in this study holds that continued and generally predictable evolutionary developments will take place in this century. As for the 21st century, few are so bold as to make predictions.

REFERENCE

1. W. Zuk. A Forecast of Bridge Engineering: 1980-2000. Virginia Highway and Transportation Research Council, Charlottesville, Publ. 79-R55, June 1979.

Publication of this paper sponsored by Committee on General Structures.

Bridge and Pier Protective Systems and Devices

KENNETH N. DERUCHER AND CONRAD P. HEINS

The design of fendering systems, which protect bridge piers against ship impact (or at least retard direct collision), has used basic fundamentals of physics and simple pile equilibrium. Certain assumptions can lead to grossly overdesigned systems or to inaccurate force evaluation in the entire support system. In order to improve the state of the art and provide accurate design data, while maintaining simple design standards, a comprehensive design study was initiated by the U.S. Coast Guard. The study included examination of the state of the art in bridge fendering, development of improved design criteria, preparation of spring constant curves for various types of fenders, and presentation of design examples. In the course of the study, it became obvious that a complex com-

puter-oriented dynamic solution was warranted. Such a program has been developed; its results are described here and compared with the results of other techniques.

Tankers, bulk carriers, cargo vessels, and barges are being built increasingly larger in recent years. They have greater cargo capacities and require more room to maneuver than ever before. Their increased size places increasing demands on waterways and adjacent structures such as bridges, docks, harbors, piers, marinas, locks, and port entrances.

Tankers built during the early part of this century had overall lengths of about 90-150 m and displacements as light as 5000 long tons. Currently tankers are being built longer than 300 m and have displacements of more than 400 000 long tons. Bulk carriers have grown from 120 m to over 200 m and have displacements of 20 000 to 22 000 long tons. In addition, barges moving on the Gulf Intracoastal Waterway now measure up to 90 m and have a liquid capacity of 5 000 000 L or 3000 long tons. The velocities these vessels can attain have also increased. Because of these increases in size and speed, the forces that can be delivered to structures adjacent to the waterway have substantially increased.

U.S. Coast Guard casualty statistics show that vessel collisions with fixed objects, such as bridges, more than doubled between 1966 and 1975, as larger and greater numbers of vessels used the nation's waterways. One U.S. Coast Guard study reveals that during the period FY 1971-1975, $23 153 000 in damage and 14 fatalities occurred. Obviously, such statistics indicate that a need exists to ensure that proper design practices are used for fendering-system installation. This need was recognized by the Bridge Division of the U.S. Coast Guard, which is charged with the responsibility to provide for the economic efficiency and safety of marine transportation under bridges that span the navigation roads of the United States. It has since then initiated a research contract to Civil Design and Technology Corporation to conduct a study of the state of the art in bridge fendering devices. As part of this state-of-the-art study, a computer program was written to analyze bridge protective devices (1).

FACTORS CONSIDERED IN THE DESIGN

The function of bridge fendering systems is to protect bridge elements against damage from waterborne traffic. There are many factors to be considered in the design of fendering systems. These factors include the size, contours, speed, and direction of approach of the ships that use the facility; the wind and tidal current conditions expected during the ship's docking maneuvers and afterwards, while the ship is tied up to the berth; and the rigidity and energy-absorbing characteristics of the fendering system and ship. The final design selected for the fendering system will generally evolve after the relative costs of initial construction of the fendering system versus the cost of fender maintenance and of ship repair are studied. In other words, it will become necessary to decide on the most severe docking or approach conditions to protect against and then to design accordingly. Hence, any situation that imposes conditions that are more critical than the established maximum would be considered an accident and would probably result in damage to the dock, the fendering system, or the ship.

TYPES OF BRIDGE PROTECTIVE SYSTEMS

As a result of the above factors, many fendering systems have been designed and/or analyzed (2-11). These systems are of wide variety and material and vary considerably in design, fabrication, and cost. A literature survey shows that basically seven types of fendering systems are in existence:

1. Floating fender (camels);
2. Standard pile-fender system: (a) timber-pile, (b) hung timber, (c) steel pile, and (d) concrete pile;
3. Retractable fender system;
4. Rubber fender system: (a) rubber in compression (Seike), (b) rubber in shear (Raykin), (c) Lord flexible, (d) rubber in tension, and (e) pneumatic;
5. Gravity-type fender system;
6. Hydraulic and hydraulic-pneumatic fender system: (a) dashpot hydraulic and (b) hydraulic-pneumatic floating fender; and
7. Spring-type fender system.

In addition to the seven basic fendering systems, numerous protective cells and clusters of piles (dolphins) exist.

THEORY

The general response of a piling system, when subjected to a ship's impact, is computed by removing the pile and examining its effect as a cantilever beam, as shown in Figure 1. The interaction of lateral support elements, such as walers, are neglected, and thus a conservative design results. Two general theoretical equations are used by the designer; they are based on force-acceleration and kinetic energy relationships.

Force-Acceleration

The induced or applied force (F_a) to the system, caused by the ship's impact, is

$$F_a = M(v_i^2 - v_f^2)/2\Delta_s \quad (1)$$

where

M = mass of ship,
Δ_s = deformation of system at point of impact, and
v_i, v_f = initial and final velocities.

The resisting force (F_r) of the system is

$$F_r = [3\Delta_s E(I/D.F.)/L^3] + \Sigma k\Delta_s \quad (2)$$

where

E = modulus of elasticity of pile,
I = inertia of pile,
D.F. = lateral distribution of load due to lateral stiffness or effect,
L = cantilever length of pile, and
k = spring constant of fendering.

The induced moment (M) and stress (f) are computed from

$$M = F_a \times L \quad (3)$$

$$f = M/(S/D.F.) \quad (4)$$

where S = section modulus.

To apply this method the designer would assume an allowable Δ_s and initial stiffness I. If the

Figure 1. Isolated pile.

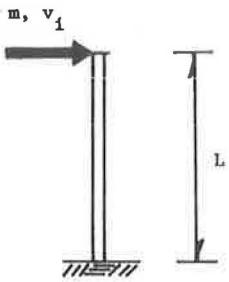

Figure 2. Fendering system.

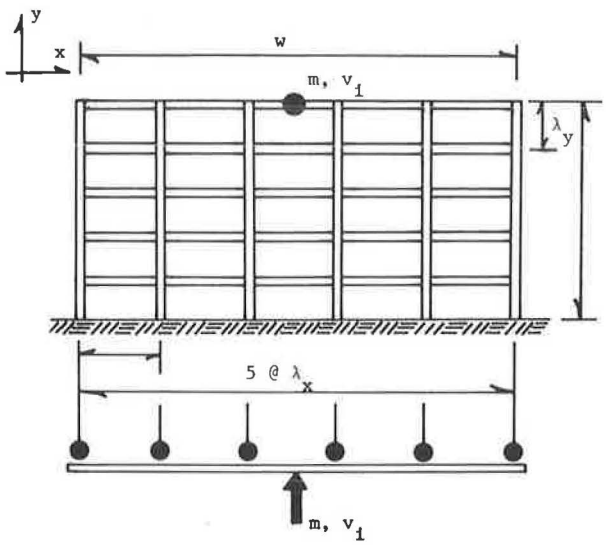

Figure 3. Intersecting elements.

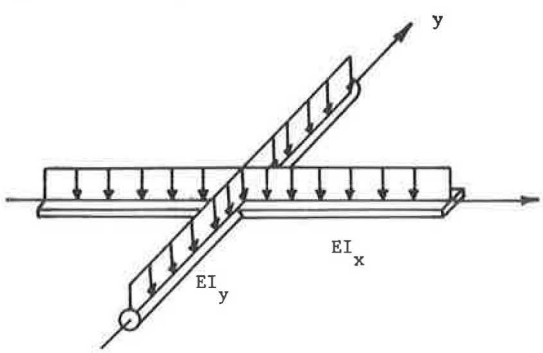

resisting force $F_r > F_a$, then the actual Δ_s would be smaller than assumed. The induced stress f would be compared to the allowable or ultimate stress of the material.

Kinetic Energy

The induced energy (E_{in}) caused by the ship is given by

$$E_{in} = (1/2)Mv_i^2(C_H)(C_s)(C_c)(C_E) \quad (5)$$

where

v_i = initial or translational ship velocity;
C_H = hydrodynamic coefficient = 1 + (2D/B), where D = draft of ship and B = beam of ship;
C_E = eccentricity coefficient;
C_s = softness coefficient; and
C_c = configuration coefficient.

The C coefficients (C_E, C_s, and C_c) can be set equal to 1.0 for the worst case. Other variations can be obtained for specific ship variables (1).

The output energy (E_o) or that energy that can be absorbed by the piling system is

$$E_0 = F \times \Delta_p + \Sigma(1/2)k\Delta_f^2 \quad (6)$$

but

$$\Delta_p = FL^3/3E(I/D.F.) \quad (7)$$

therefore

$$E_0 = F^2L^3/(3EI/D.F.) + \Sigma(1/2)k\Delta_f^2 \quad (8)$$

where

F = induced force,
Δ_p = single pile deformation, and
Δ_f = fender deformation.

The induced force F is determined by using Equations 5-8 and by assuming $\Delta = FL^3/3EI/D.F.$ or zero. The resulting Δ can then be evaluated and used to reevaluate E_o if $\Delta = 0$ was originally assumed. The resulting moment and stress is found as per Equations 3 and 4.

System Technique

A complete pile system is shown in Figure 2 and includes the support piles and lateral walers, excluding fenders. This system is, in effect, a cantilever grid plate subjected to a lateral load. The response of such a system can readily be determined by using matrix formulations or a finite difference scheme, the latter of which will be presented here.

Several interacting elements of the system are shown in Figure 3. If a uniform load is assumed to be applied along each member, the load deformation response (d) is given by the basic relationship

$$d^4w/dx^4 = q_x/EI_x \quad (9)$$

$$d^4w/dy^4 = q_y/EI_y \quad (10)$$

where

EI_x, EI_y = member stiffness,
w = vertical deformation, and
q_x, q_y = external applied loads in force.

Equations 9 and 10 can be written in difference form (3) from the relationship

$$d^4w/dx^4 = (w_{\ell\ell} - 4w_\ell + 6w_0 - 4w_r + w_{rr})/\lambda_x^4 \quad (11)$$

$$d^4w/dy^4 = (w_{aa} - 4w_a + 6w_0 - 4w_b + w_{bb})/\lambda_y^4 \quad (12)$$

where the node relative to each deflection point is prescribed along the two girders and spaced uniformly, as shown in Figure 4.

If the total applied load on the grid is now assumed to be q (force per unit area), then the resistance is proportional to

$$(q_x/\lambda_y) + (q_y/\lambda_x) = q \quad (13)$$

Figure 4. Nodal identification.

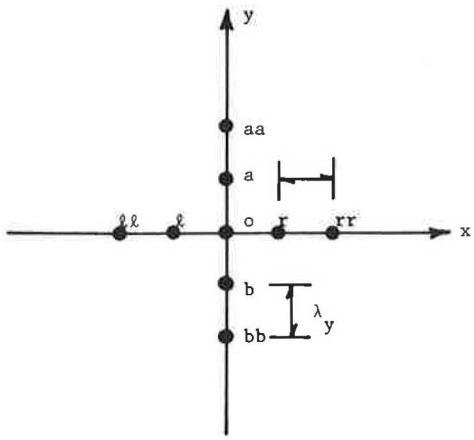

Figure 5. Grid case solutions.

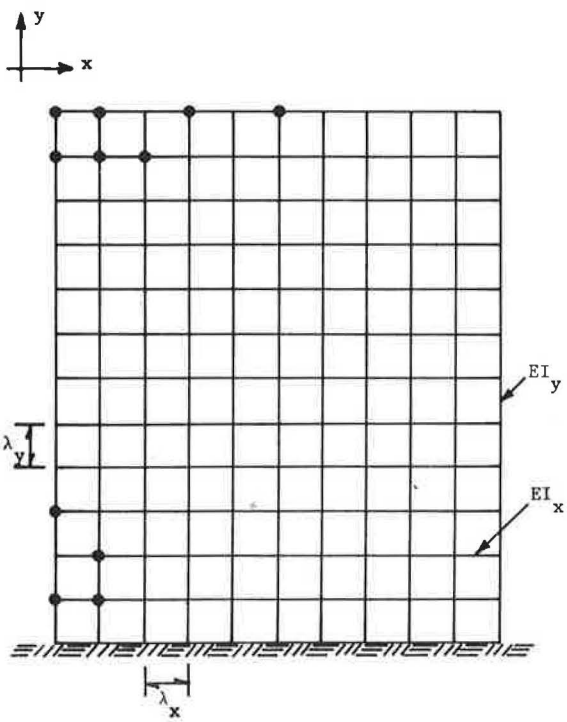

Substitution of Equations 11 and 12 into 9 and 10 gives q_x and q_y, and then substituting into Equation 13 gives

$$[D_x/\lambda_x{}^4(w_{\ell\ell} - 4w_\ell + 6w_0 - 4w_r + w_{rr})] + [D_y/\lambda_y{}^4(w_{bb} - 4w_b + 6w_0 - 4w_a + w_{aa})] = q \quad (14)$$

where

$$D_y = EI_y/\lambda_x \quad D_x = EI_x/\lambda_y \quad (15)$$

Defining $D_x = \alpha D_y$ and $\lambda_x = n\lambda_y$ and substituting into Equation 12 gives the resulting mesh Equation 16

$$\begin{bmatrix} & & n^4 & & \\ & & -4n^4 & & \\ \alpha & -4\alpha & 6(\alpha + n^4) & -4\alpha & \alpha \\ & & -4n^4 & & \\ & & n^4 & & \end{bmatrix} \cdot w = qn^4\lambda^4\lambda/D_y \quad (16)$$

Equation 16 represents the general load-deformation response of the grid when subjected to a uniform load q. In order to apply this equation to the cantilever plate, appropriate boundary conditions must be applied. For the basic cantilever plate, the free edges have boundary conditions M = V = 0, and along the fixed edge W = θ = 0, where M = bending moment, V = shear face, W = deflection, and θ = slope. These modifications, considering all possible conditions along the plate, result in a total of 12 cases, including the general case given by Equation 16 whose locations are shown in Figure 5.

All of these cases and their resulting equations have been programmed for direct evaluation of the deformation of the plate for any stiffness and loading. The application of this program will now be described.

PARAMETRIC STUDY

As illustrated by the general theoretical techniques, the distribution factor is important if it is desirable to determine the system response. The determination of this factor (D.F.) has been obtained for typical grid stiffnesses (D_x,D_y) and span length (L) or height of the pile. A unit load effect was used in examining the system and single pile.

Longitudinal Stiffness (D_y)

The range in the stiffness $D_y = (EI_y/\lambda_x)$ was determined by examination of typical steel H-pile (HP), steel Y-flange (W), and 12- to 28-in (30.5- to 71.1-cm) round timber members that are used in piling systems. The spacing λ_x was varied between 5 ft (1.5 m) and 25 ft (7.6 m), in 5-ft increments. The length of cantilever plate was varied between 20 ft (6.1 m) and 60 ft (18.3 m) in 4-ft (1.2-m) increments.

Transverse Stiffness (D_x)

The range in the stiffness $D_x = (EI_x/\lambda_y)$ was determined by also examining typical walers, which consisted of steel W and 10-in (25.4-cm), 12-in (30.4-cm), and 14-in (35.6-cm) timber sections. The spacing λ_y was varied in the same way as the λ_x variable.

Range in Parameters

A study of all of the resulting stiffnesses indicates the following ranges (1 lbf•in = 8.85 N•m; 1 ft = 0.3 in):

Variable	Lower Bound	Upper Bound
D_y (lbf•in)	20 000 000	600 000 000
D_x (lbf•in)	4 000 000	100 000 000
L (ft)	60	60

Grid-Difference Solutions

By using these ranges in parameters and applying a unit load, the maximum deformation in the system has been obtained. In all these solutions, a maximum of 10 vertical mesh lines was used in which the spacing of the lines was set equal to a constant λ_x = 60 in (152.4 cm), which gave a width of 45 ft (13.7 m). The mesh point along these vertical lines was fixed at λ_y = 48 in (122 cm) for the range of 20-60 ft (6.10-18.3 m).

The solution of systems has given the Δ_{sys}, which was then divided by the factor $L^3/3EI_y$, which is the D.F. These results were then plotted, D.F. versus pile height L, as given in Figures 6 through 13. This ratio, given D.F., will now be described.

Figure 6. D_y = 20 000 000 lbf·in.

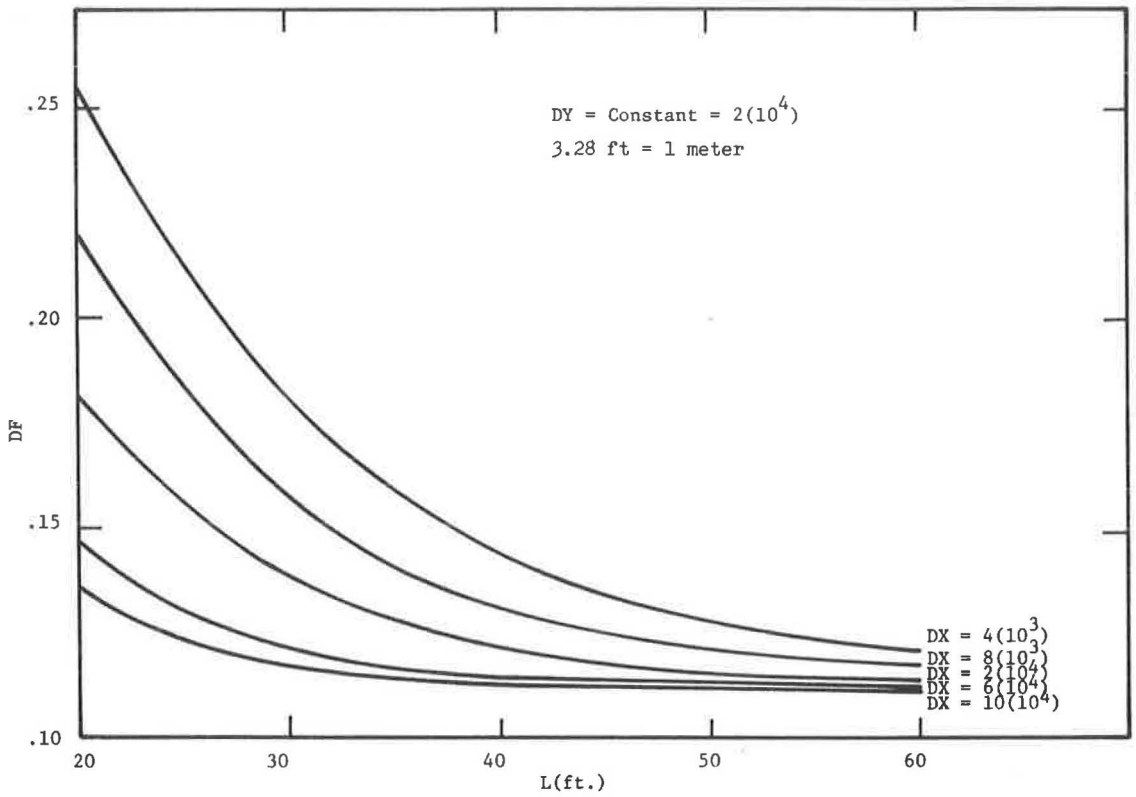

Figure 7. D_y = 40 000 000 lbf·in.

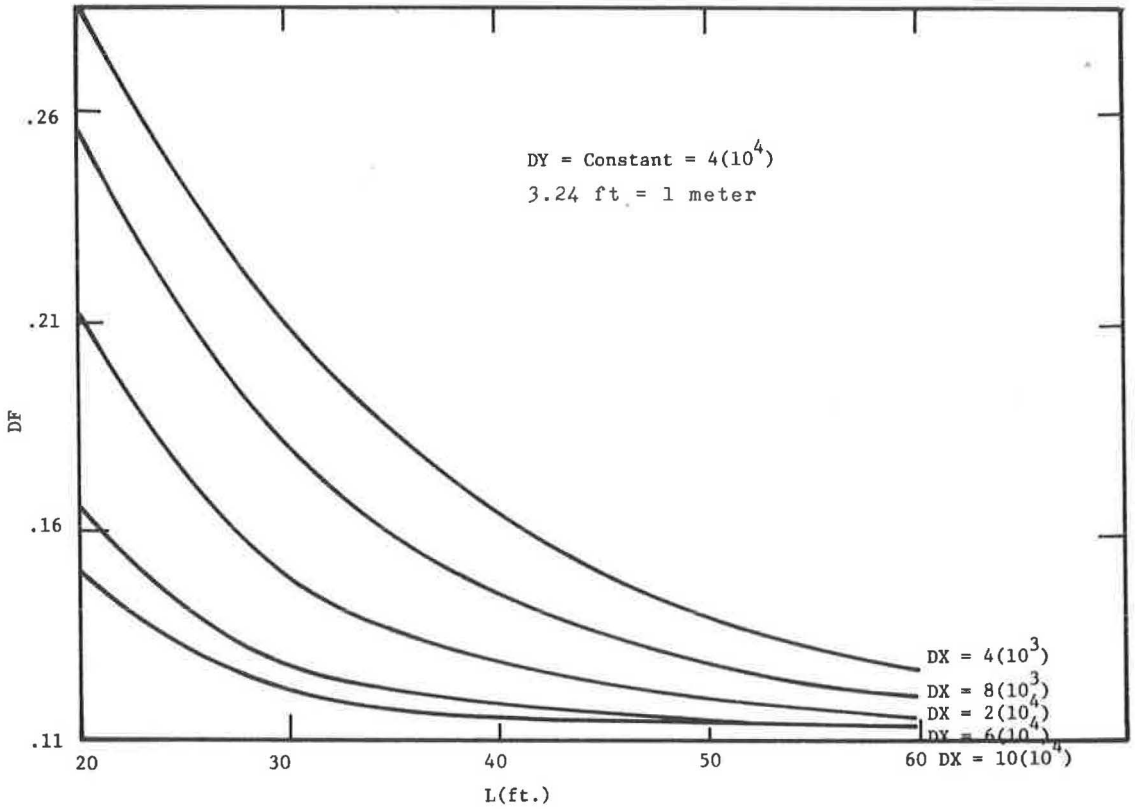

Figure 8. D_y = 60 000 000 lbf·in.

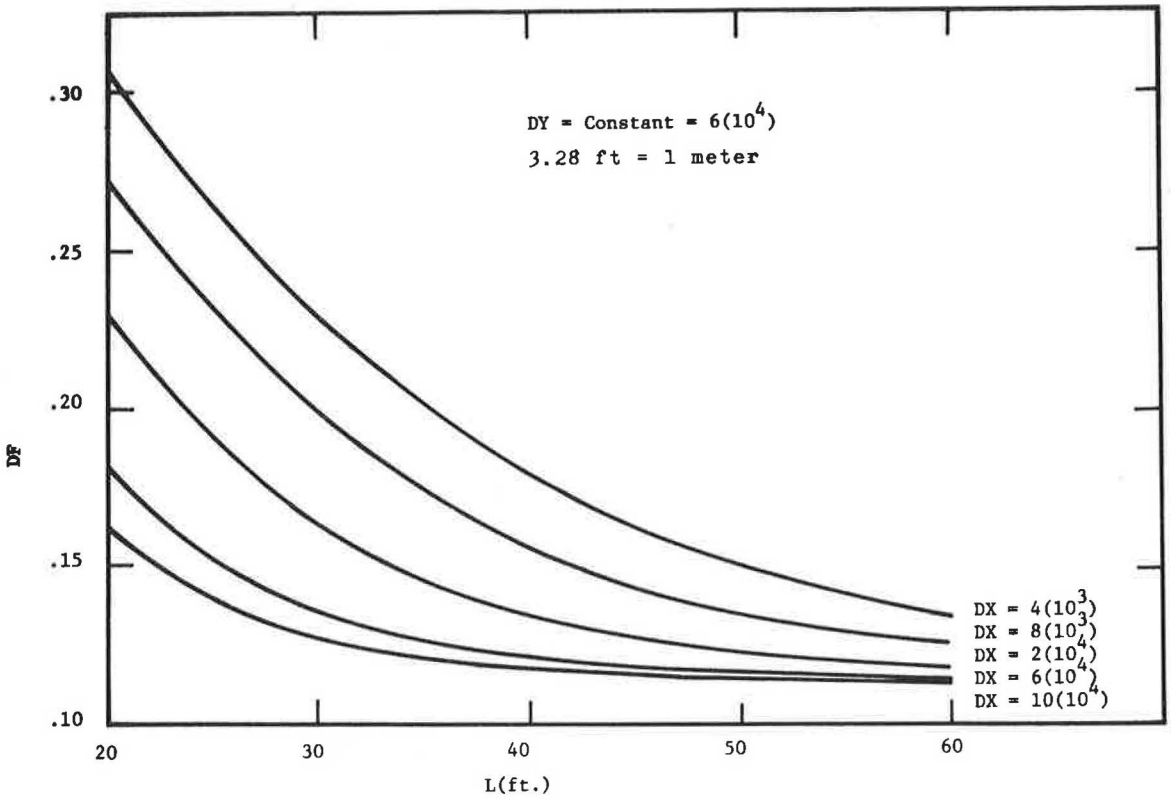

Figure 9. D_y = 80 000 000 lbf·in.

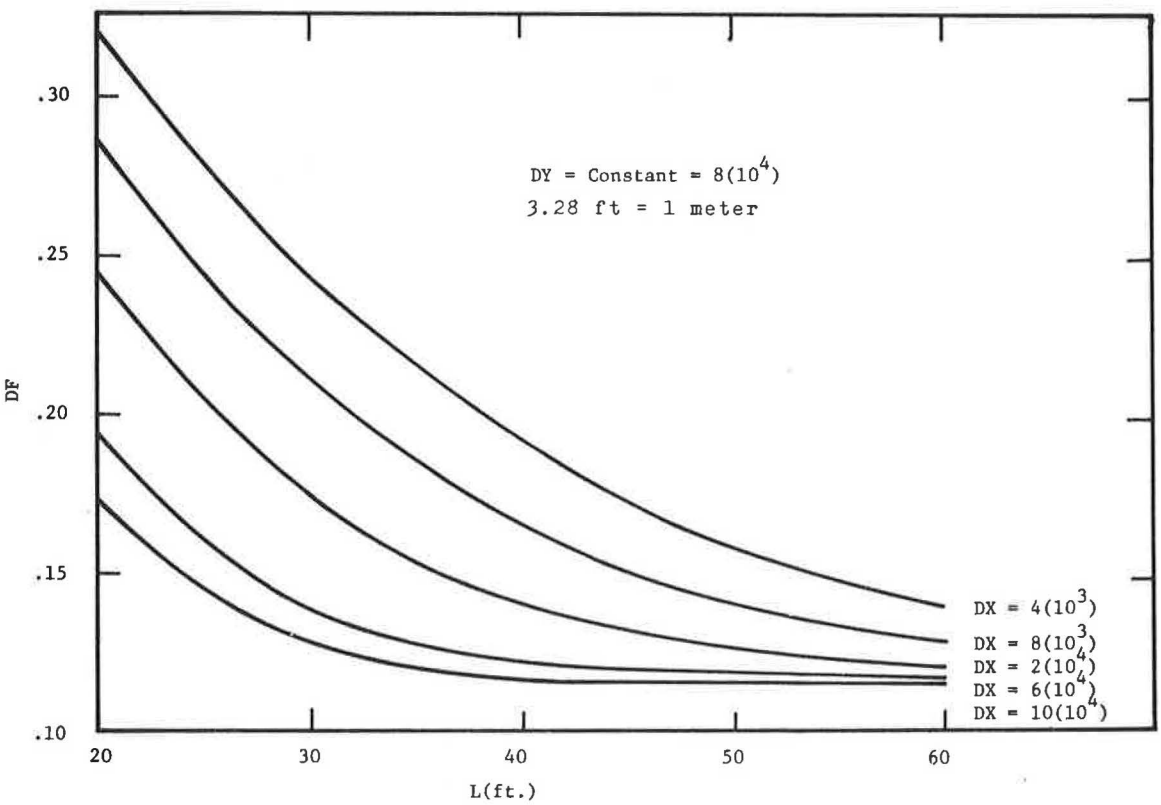

Figure 10. D_y = 100 000 000 lbf·in.

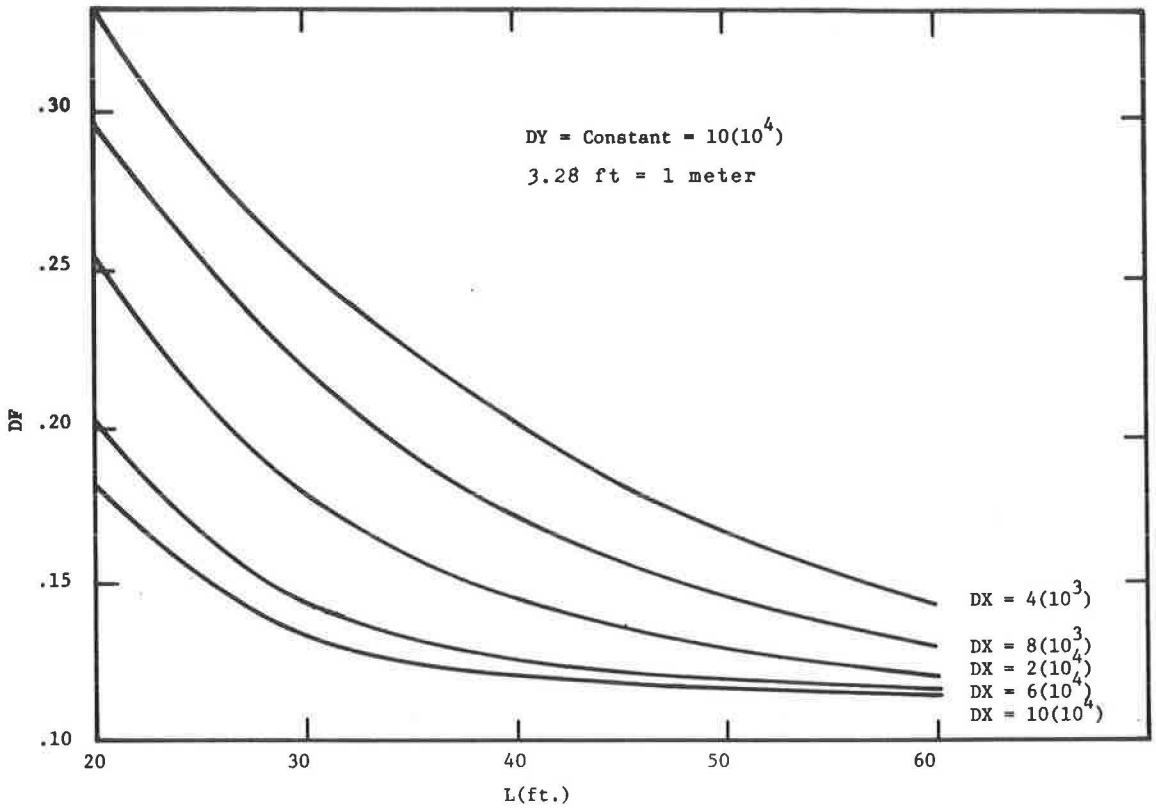

Figure 11. D_y = 200 000 000 lbf·in.

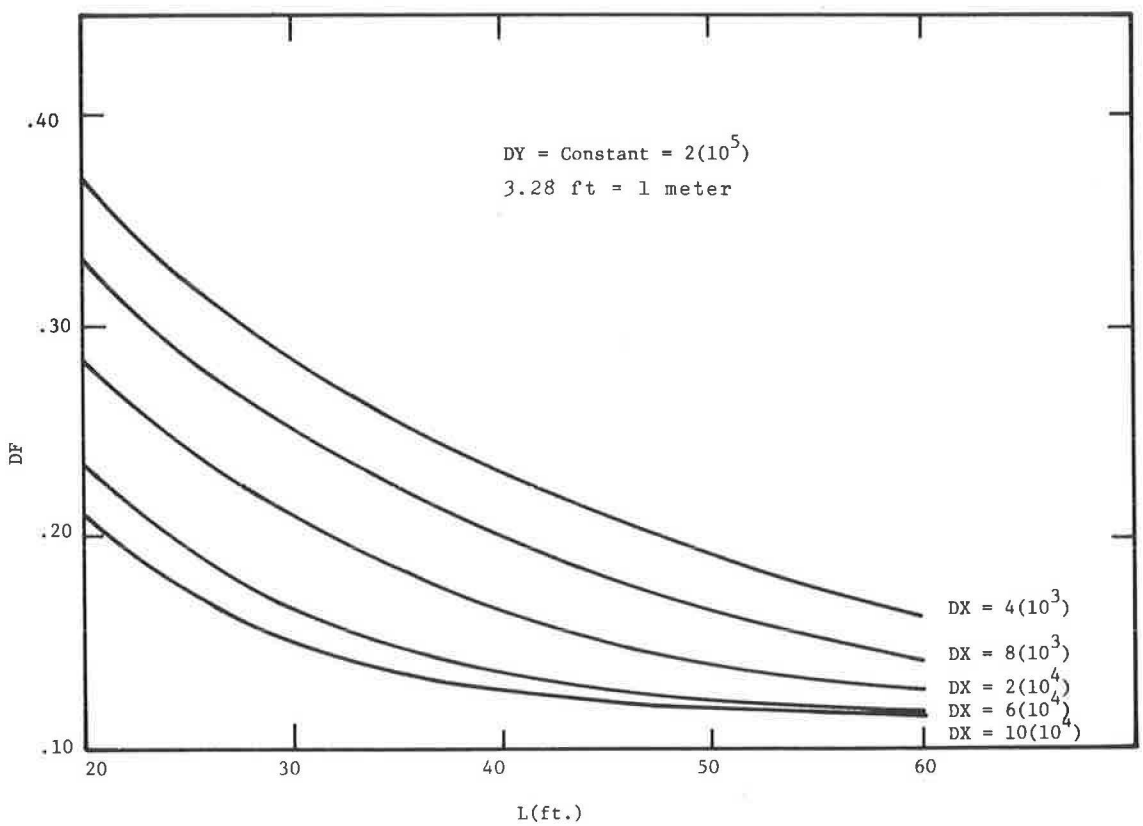

Figure 12. D_y = 400 000 000 lbf·in.

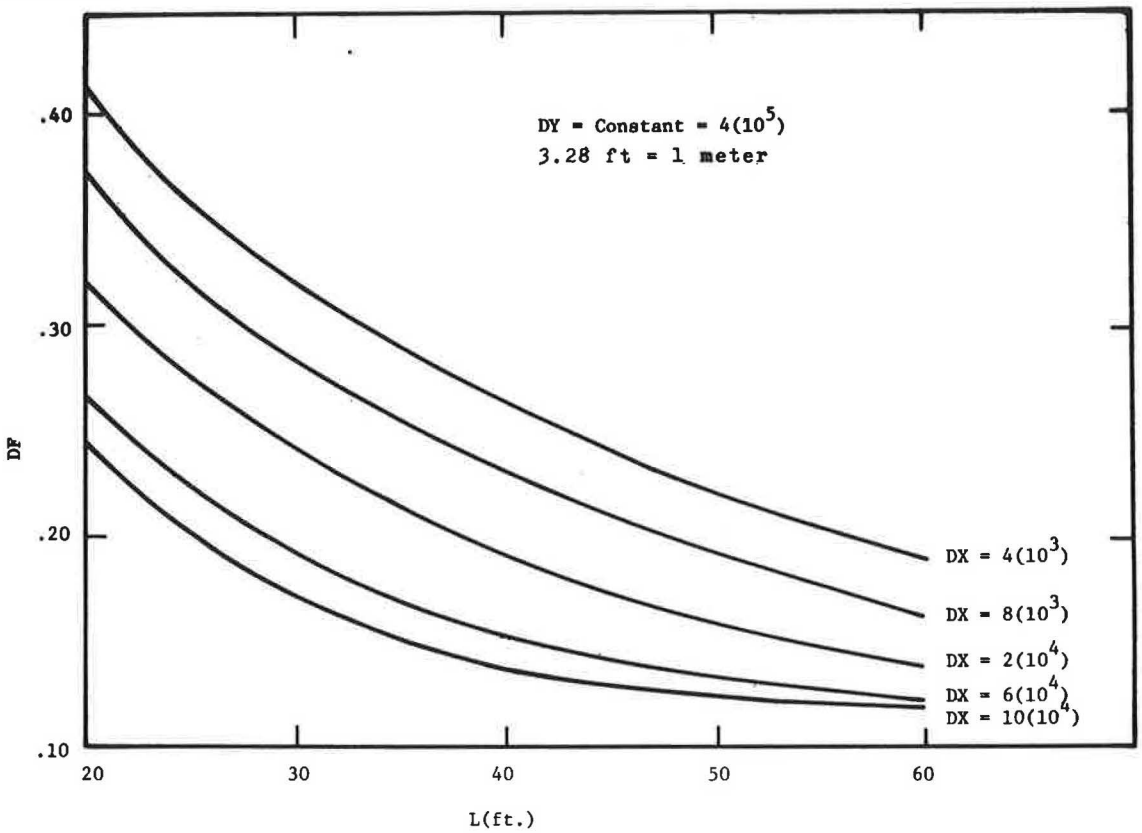

Figure 13. D_y = 600 000 000 lbf·in.

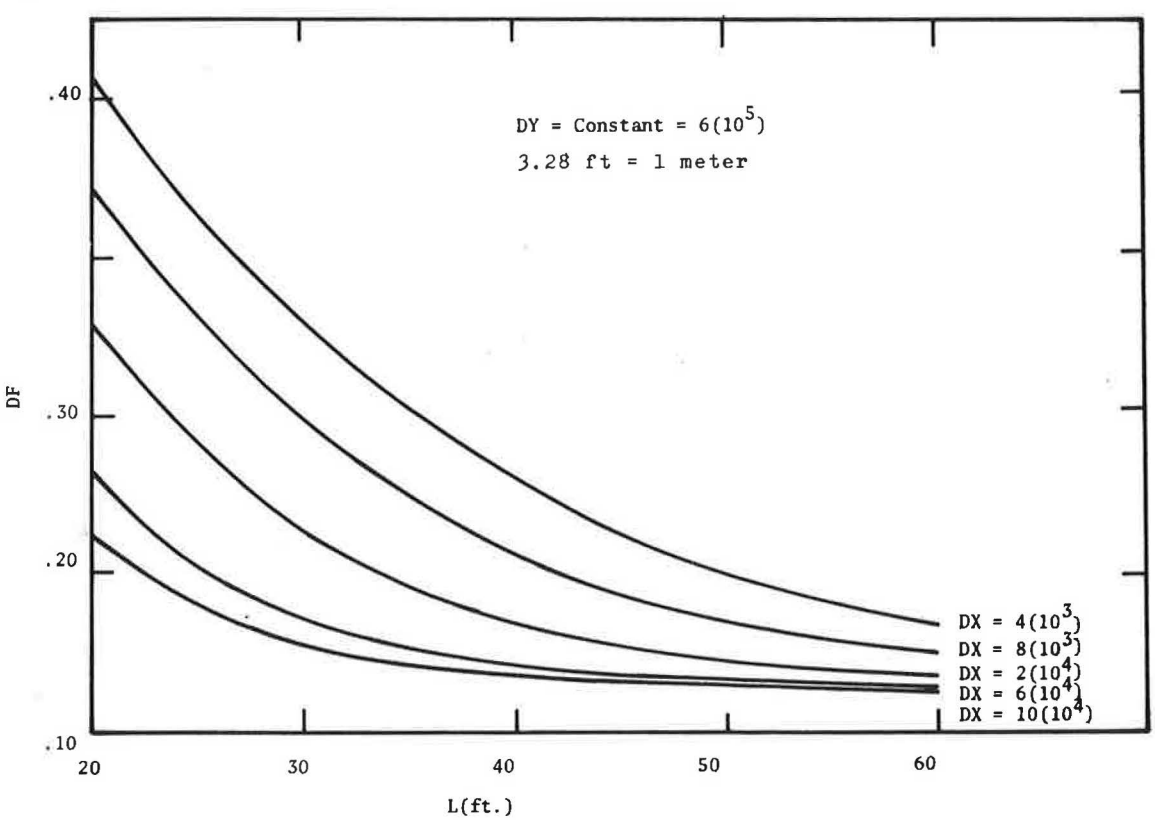

Distribution Factor

The finite-difference cantilever grid equations can provide direct deformation values along any pile. Depending on the lateral stiffness (D_x), the deformation at the top or free edge of the piles can vary dramatically. This variation is quite important if the designer wishes to properly identify the interaction between the piles and an isolated pile. A convenient method to describe such interaction is to relate the deformation of the systems (Δ_s) to that of the isolated pile (Δ_p), which gives a D.F. of

$$D.F. = \Delta_s/\Delta_p \quad (17)$$

where Δ_s = maximum deformation in the grid system (finite differences) and $\Delta_p = PL^3/3EI_y$ = cantilever pile deformation.

Equation 17 signifies the reduction in deformation of an isolated pile when that pile is part of the system and thus the influence of lateral stiffness. Therefore, the stiffness (I) of an isolated pile can be increased by the amount of 1/D.F. or $I_{sys} = I_p/D.F.$ This factor has been referenced in Equations 2 and 6-8.

The resulting distribution factors for various relative stiffnesses are given in Figures 6-13 and can be used for direct design.

COMPUTER ANALYSIS ASSUMPTION

Ten assumptions are necessary to use the existing program:

1. The piling interaction with the soil medium is considered (i.e., flexible supports).
2. The soil may be layered.
3. The piling group is considered as a three-dimensional unit.
4. Interactions of the horizontal walers are considered.
5. Forces and deformations throughout all piles can be evaluated for any time interval.
6. The forces and deformations are evaluated along the length of each pile.
7. Rigid wharfs, fenders, dolphins, or combinations can be considered.
8. During ship impact, any pile that fails is noted and the system is reevaluated.
9. Total energy in the system, input and output, is computed during each time interval.
10. The system may have any general plan orientation (i.e., straight, curved, etc.).

COMPUTER PROGRAM

The computer program was written on the UNIVAC 1108 computer in the FORTRAN IV language. As indicated above, this program has the capability of analyzing any given bridge protective system and/or device.

The basic theory used in a protective-device system consists of several subsystems. One subsystem consists of the complete interaction of the supporting piling systems, which includes any number of piles, pile types, and soil characteristics. The other subsystem consists of the interaction of the system, supports, fenders (if applicable), and any distribution beams. This entire system is then examined (at any attached angle) under the impact of the vessel. At any instance, the piling is examined for a failure. When a given pile fails, the system is automatically modified and the dynamic analysis is continued. This process is continued automatically until the vessel stops or all the energy is consumed (i.e., failure of all piles). At each instant of a pile failure, the resulting forces and stress on this failed pile are listed.

Input consists of the size (tonnage), contours, speed, and direction of approach of the vessel; rigidity and energy-absorbing characteristics of the protective system and of the vessel; the soil parameters; and, finally, the geometry and size of the protective system and the materials used.

Output includes the velocity of the vessel at any instance and the load deformation of the protection. Further, it gives the energy absorbed by the protective system and the vessel's hull at any distance.

The results are then interpreted as to whether the protective system is adequate for the given conditions or whether it is overdesigned or underdesigned. If the proposed protective system is found to be underdesigned for the given conditions, then a major catastrophic failure may be avoided. Recommendations can then be made as to which structural elements to increase in size. If the system is found to be overdesigned, then recommendations can be made to decrease the size of the structural elements. In either case, dollars are saved, lawsuits are avoided (in the case of underdesign), and materials may be saved (in the case of overdesign).

CONCLUSIONS

A computer program has been written that can analyze any given bridge protective-device design. The program can handle every imaginable parameter and can make changes to these parameters much faster than hand computation could permit. The program has proved successful in many situations for the U.S. Coast Guard and has saved them $100 000.

REFERENCES

1. K. N. Derucher and C. P. Heins. State of the Art: Bridge Protective Devices. Bridge Division, U.S. Coast Guard, 1977.
2. Public Works Maintenance--Wharfbuilding: Structural Timbers--Fender Systems. In U.S. Navy Wharfbuilding Handbook, 1961, pp. 176-280.
3. L. Gower, C. Mardel, and W. Heathorn. The Behavior of Piles in Maritime Works. In Behavior of Piles, Institute of Civil Engineers, London, England, 1962, pp. 153-159.
4. Port Design and Construction. American Association of Port Authorities, Washington, DC, 1977, pp. 140-152.
5. J. R. Morison, J. W. Honson, and M. P. O'Brien. Experimental Studies of Forces on Piles. In Coastal Engineering, ASCE, 1962, pp. 340-369.
6. J. Michalos. Dynamic Response and Stability of Piers and Piles. Waterways 3, ASCE, Vol. 88, Aug. 1962, pp. 61-83.
7. A. Kleiner. Construction of Dolphins in the Martinsa Bay. Presented at the 5th International Harbor Congress, London, 1974.
8. L. A. Valse. Docking Fenders to Pier Protection. Engineering News-Record, Vol. 160, No. 19, May 15, 1958, pp. 40-44.
9. F. S.-T. Li and R. M. Venkataswamy. Ultimate Energy Design of Prestressed Concrete Fender Piling. Waterways 4, ASCE, Vol. 97, Nov. 1971, pp. 647-662.
10. A. L. L. Baker. Gravity Fenders. Presented at 4th Annual Princeton Conference on Berthing in Exposed Locations, Princeton Univ., Princeton, NJ, 1967, pp. 97-109.
11. G. Broersma and C. G. Middlebeek. Middlebeek Fender. Navy Engineers Journal (Leningrad), April 1971, pp. 83-91.

Publication of this paper sponsored by Committee on General Structures.