Lightweight Accessible Buses: Selection, Maintenance, and General Care

JAMES D. BROGAN AND FRANCIS X. McKELVEY

Guidelines have been developed to assist private nonprofit agencies that have little experience in providing transportation services in selecting vehicles and related equipment appropriate to their service needs. Emphasis is on lightweight accessible vehicles—that is, lift-equipped vans, modified vans, and small buses. Operating and maintenance experiences of agencies currently using such vehicles are summarized. The information may be used to assist existing or potential operators to understand the applications and limitations of the current state of the art in vehicles and equipment.

In recent years, many public and private agencies have sponsored programs to make transportation available to passengers who are unable to use fixed-route transit service or who live in areas where there is no fixed-route service. These special transportation services usually use vehicles that are smaller and lighter than standard transit vehicles and can thus be referred to as lightweight transit vehicles or lightweight accessible bus equipment.

In order to provide a better understanding of the basic operating characteristics of these types of vehicles, Michigan State University and the Michigan Department of Transportation, under a contract with the Transportation Systems Center and Urban Mass Transportation Administration (UMTA), have developed material that explains the selection, maintenance, and general care of vehicles for lightweight accessible bus operations (1). Resource material for the project was collected from many sources, including manufacturers of vehicles and equipment, system operators and maintenance personnel, and state and federal research reports (2-8).

The most important consideration in lightweight accessible bus operations is that lightly constructed vehicles have to do heavy work. Those in charge of a lightweight accessible bus service should realize that their operation will benefit from attention to three significant areas:

1. Vehicles should be ordered that are as closely tailored as possible to the kind of service the operation desires to provide.
2. Advance preparations for regular preventive maintenance and repairs must be made whether the service will be operating an entire fleet or only a single vehicle.
3. Vehicles must be driven with extreme care, since expensive damage is so easy to inflict on this type of vehicle and since breakdowns are so disruptive to service.

Careful selection, preventive maintenance, and good driving--these are the keys to keeping a lightweight accessible bus operation running reliably.

VEHICLE SELECTION

Lightweight accessible bus operations usually use three types of vehicles: standard vans, modified vans, and small buses. Standard passenger vans range from a 5-passenger van with a 110-in wheelbase to a 15-passenger van with a 138-in wheelbase. Typical dimensions of the type of vehicle are given in Table 1. The seating arrangement typically installed on standard vans is shown in Figure 1. Note that the clearances between the seats, and between the seats and the side of the vehicle, may be extremely difficult for elderly or handicapped passengers to negotiate. In addition, the low ceiling can be uncomfortable and possibly hazardous for elderly or handicapped passengers, and the door height and ceiling clearance of these vehicles may not allow sufficient clearance for a wheelchair user to board comfortably, especially if assistance is required.

Passenger vans may be ordered fitted with modifications to allow for more interior space and larger door dimensions. These vehicles are called modified vans and are ordered from the manufacturers who perform the modifications. The raised roof on a

Table 1. Exterior dimensions for standard vans.

	Chevrolet and General Motors				Dodge			Ford	
Measurement	G20	G20	G30	B200	B300	B300 Maxivan	E150	E250	E350 Supervan
Gross vehicle weight (lb)	6600	6600	8600	6050	7200	8550	NA	NA	NA
Wheelbase (in)	110	125	125	109.6	127.6	127.6	124	138	138
Overall length (in)	178.2	202.2	202.2	178.9	196.9	222.9	186.8	206.8	226.8
Overall width (in)	79.5	79.5	79.5	79.8	79.8	79.8	79.8	79.8	79.8
Overall height (in)	80.2	80.2	81.2	79.6	80.9	80.6	80.5	82.0	83.7
Rear overhang (in)	48.0	48.0	48.0	40.0	40.0	61.0	37.8	43.8	63.8
Rear track (in)	68.0	68.0	68.0	65.2	65.2	65.2	67.0	66.0	66.0
Step height (in)	20	20	20	20	20	20	20	20	20
Side door									
Hinged									
Width (in)	NA	NA	NA	49.3	49.3	49.3	NA	NA	NA
Height (in)	NA	NA	NA	47.2	47.2	47.2	NA	NA	NA
Sliding									
Width (in)	44.2	44.2	44.2	39.8	39.8	39.8	48.0	48.0	48.0
Height (in)	49.2	49.2	49.2	47.2	47.2	47.2	48.0	48.0	48.0
Rear door									
Width (in)	54.4	54.4	54.4	49.3	49.3	49.3	54.0	54.0	54.0
Height (in)	48.8	48.8	48.8	47.2	47.2	47.2	47.9	47.9	47.9
Turning diameter at front bumper (ft)	43.57	48.48	46.62	NA	NA	NA	44.3	49.7	55.3

Figure 1. Seating arrangements for standard vans.

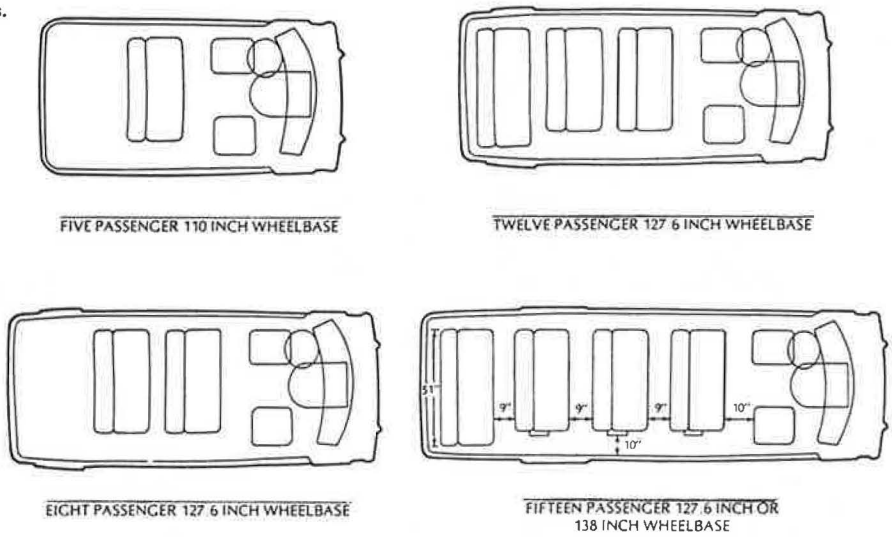

Figure 2. Typical exterior dimensions for modified van.

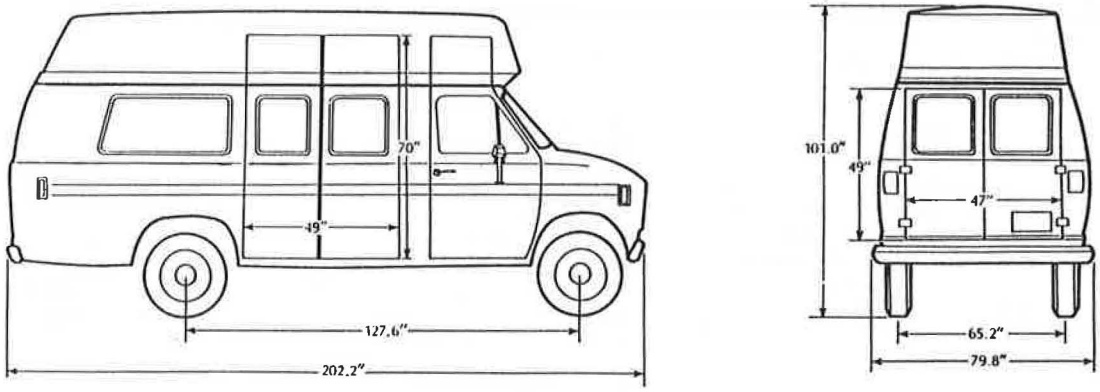

modified van increases the interior clearance to about 74 in at the center aisle and allows a maximum vehicle doorway height of 70 in. Modified vans are typically built from production-model passenger vans that range in wheelbase from about 128 to about 138 in. The finished vehicle is usually about 80 in wide and stands about 100 in high. Typical dimensions are shown in Figure 2.

The raised roof on a modified van may be constructed of fiberglass, aluminum, or steel. Any vehicle in passenger service should have its roof reinforced with a steel framework to prevent crushing in the event of a rollover.

Some services require a heavier vehicle than a modified van. Small buses are thus built onto light truck chassis, with dual wheels on the rear axle. Like modified vans, these vehicles are ordered from the firms that build the bodies. Small buses range in wheelbase between about 125 and 167 in. There are two general size categories for small buses: 12- to 16-passenger vehicles and 16- to 22-passenger vehicles. Typical exterior dimensions for a 12-passenger small bus are shown in Figure 3. Vehicles of this type are generally about 94 in wide, stand about 107 in high, and have a wheelchair entrance door about 50 in wide and 70 in high. Like modified vans, these vehicles usually allow about 74 in of clearance between floor and ceiling at the center aisle.

The added interior space in a small bus makes it easier to secure wheelchairs; ambulatory passengers also find it easier to get into and out of their seats. The average 20-passenger small bus has a wheelbase of about 163 in, an overall length of about 262 in, a width of about 90 in, and a height of about 107 in.

Interior arrangements on modified vans and small buses allow passengers a great deal more room than standard vans. Modified vans can usually seat from 9 to 12 ambulatory passengers. These vehicles can seat from two to four wheelchair-using passengers, depending on the physical size of these passengers and the dimensions of their wheelchairs. Each wheelchair station requires as much space as two seats for ambulatory passengers. In addition, wheelchair lift machinery will take at least as much room as two pedestrian passenger seats.

Passenger space needs should be realistically estimated, especially for wheelchair users who require the assistance of an attendant to board the vehicle. On many lightweight accessible bus vehicles, there is not enough room to move a wheelchair past another wheelchair that is already secured in place.

Before a vehicle is ordered, a careful assessment should be made of the actual amount of interior space passengers will need. Perimeter seating arrangements may save space and make it easier to seat passengers who have trouble negotiating tight spaces. Wheelchair users must sometimes be secured facing the aisle. It should be remembered, however, that many passengers find it uncomfortable to ride

Figure 3. Typical exterior dimensions for 12-passenger small bus.

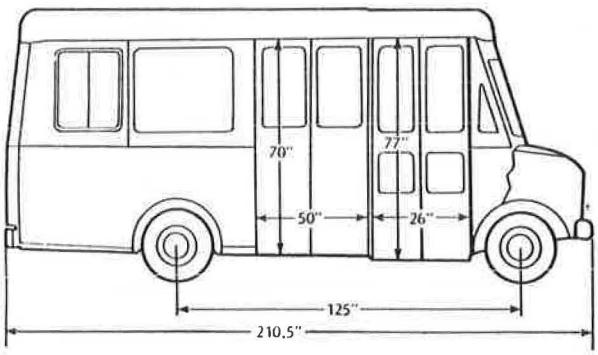

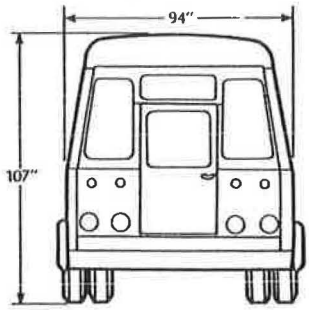

facing sideways. Thus, as a general rule, as many seats as possible should face forward.

Modified vans and small buses may be equipped with a variety of options for comfort and safety. Transit-type seating arrangements allow for aisle space down the center of the vehicle. Vertical handholds can be installed and hard surfaces can be padded. Extra insulation, heating, and ventilation as well as air conditioning can be installed. Interior lighting can be brightened, and color schemes may be contrasted to help passengers negotiate seats, aisles, and steps.

One of the most important options for lightweight accessible bus vehicles involves the equipment needed to accommodate wheelchair-using passengers. The most commonly used lift equipment consists of an electric or electrohydraulic elevator that stows aboard the vehicle and lowers to the ground to receive or discharge passengers. These lifts may be mounted either to the side or to the rear of the vehicle. On another type of lift, the pedestrian entrance also serves as the lift door, since the steps of the vehicle rearrange themselves to serve as a wheelchair lift.

Some type of device is also necessary to secure the chair in place aboard the vehicle. Some of these devices grip the rear wheels of the chair by means of pins or clamps, and other devices grip the frame of the chair with metal braces or nylon webbing. Other devices can be combined with a folding "flip" seat, and some restraints can secure several wheelchairs.

The technology for carrying wheelchair users on transit vehicles is in a relatively early stage of development. No existing system is completely ideal. Certain types of wheelchairs cannot be secured with either wheelor frame-locking devices. To protect passengers as well as possible, it is necessary to determine the actual dimensions of the wheelchairs the vehicles will have to carry and to use separate safety belts for the passenger (attached either to the frame of the vehicle or to the frame of the passenger seat) in addition to the restraints for the wheelchair.

Every lift should have as a minimum several features: sufficient lifting capacity, a large enough platform, a nonskid surface, anti-roll-off barriers, and manual backup controls. Additional desirable features include a handrail, protection for moving parts, controls for either driver or user, safety shutoff switches, and stowage inside the vehicle for cold climates.

For lightweight accessible bus service, good communications are essential. A mobile radio aboard each bus and a base station radio at the dispatch office will add safety and efficiency to a system.

SYSTEM PLANNING

Operational characteristics will influence the selection of each vehicle: Is maneuverability or capacity needed? How much room will passengers need? Will passengers or conditions require some extra-tough equipment? What is needed in wheelchair-carrying capacity?

A comparison of 1980 costs for modified vans and small buses is given below:

Vehicle Type	Cost Range ($)
Modified van	16 000 to 29 000
Small bus	14 000 to 35 000

For vehicles with similar furnishings and passenger capacity, the difference in price may be due to the general heavier construction of the small bus. Specifications, however, must be exact. Since every modification affects the structural integrity of the vehicle, someone familiar with passenger vehicles should draft all specifications.

MAINTENANCE

In lightweight accessible bus operations, preventive maintenance is as important as the purchase of the vehicles. Preventive maintenance means maintaining a vehicle to prevent breakdowns rather than waiting until something goes wrong and then fixing it.

The first preventive maintenance measure is to plan some reserve capacity into a bus fleet. One bus in reserve for every seven or fewer on the road is a good rule of thumb. A small fleet, however, may have to reserve time in the schedule of each vehicle rather than have extra vehicles for preventive maintenance.

Maintenance arrangements should be made before operations begin. If possible, a garage should be set up and a mechanic hired. One alternative is to have a driver double as a mechanic so that vehicles will get the attention they need. It is also important to keep a supply of parts on hand. Operators with very small fleets may have to take their repair work to commercial garages, or it may be possible to contract with another agency, such as the local school district, to do maintenance.

It is critically important to have a maintenance budget worked out in advance. It is difficult to be in the position of having to look for repair money after the vehicle breaks down.

A comprehensive maintenance schedule for each vehicle should be devised. Certain maintenance items must be performed either after a certain period of time or at a specific mileage. For example, front-end lubrication should be performed at least once a month.

The most important maintenance items are the most routine: motor-oil level, all fluid levels, the pollution control equipment, air and fuel filters, and all belts and hoses. Oil and filters should be changed at least once a month. Brakes should be watched constantly for leaks or other signs of trouble and should be checked at least once every 8000 miles. Tires should be kept at the correct level of inflation, and the pattern of wear on the tread should be watched for signs of misalignment or faulty wheel balance. Tires should be rotated from wheel to wheel at least once every 10 000 miles, and the engine should be tuned at least once every 12 000 miles.

Transmissions should be serviced at least once every 15 000 miles. The level and color of the fluid on the dipstick must be checked, and drivers must know how to avoid transmission damage.

Several other preventive maintenance measures should be kept in mind:

1. Every time the vehicle is hoisted, check the driveline for wear. Replace loose universal joints before they break.
2. Check the differential gear lubrication every month and watch for leaks in differential and rear-axle seals. Change the lubricant in the differential every 15 000 miles.
3. Be sure the exhaust system is kept tight and in good condition. Replace worn pipes and mufflers immediately to prevent fumes from entering the vehicle.
4. Be sure the belt to the alternator is kept tight enough to prevent slippage but not so tight that the bearings in the alternator are damaged.
5. Fix body damage quickly, inside and out. Once a week, go over the vehicle and tighten screws, nuts, and bolts. Seal any leaks.
6. Wheelchair lifts are light machinery that receives heavy wear. Because it is so critical to keep the lift in good working order, keep the machinery clean and properly lubricated at all times. Show drivers how to operate lift equipment, and instruct them to run each lift through a complete cycle at the beginning of each day to check for trouble.
7. Keep restraint devices clean, tight, and correctly lubricated and adjusted.
8. Keep the vehicle clean, inside and out.
9. Teach drivers to keep a constant check on all of the gauges on the dashboard and not to ignore a reading that indicates trouble.
10. Drivers should be sure safety equipment is present and tightly secured. A loose fire extinguisher can fill the bus with choking chemical powder.
11. Every driver should check at the beginning of a shift to make sure the emergency door is unlocked.
12. The first and last driver of the day should fill out a complete inspection sheet on each vehicle; drivers should promptly report anything that requires attention.
13. Keep a complete set of maintenance records for every vehicle in order to keep track of expenditures and spot recurring difficulties.

DRIVER SELECTION

It is important to select the right vehicle and to plan for good preventive maintenance. It is also very important to see to it that vehicles are driven with a conscious effort to keep them in good condition.

To be sure that vehicles are driven in such a way as to prolong service life, drivers should be hired carefully; this is not an ordinary driving job. Anyone operating a lightweight accessible bus service should make every effort to hire top-quality personnel by (a) interviewing every applicant; (b) giving a brief written test on traffic laws, general knowledge, and judgment; and (c) giving each applicant a road test to check vehicle-handling ability and driving habits.

New drivers should be instructed thoroughly so that they understand the following points about driving a lightweight accessible bus:

1. Watch overhead clearance at all times. Misjudging clearance is a common cause of expensive damage to the vehicles. Turning maneuvers may take some practice with a vehicle larger than an automobile.
2. Go easy on the accelerator and the brakes.
3. If the vehicle gets stuck, call for a tow. Do not spin the wheels; it may ruin the transmission.
4. Drivers should know all local road hazards. Report any new hazards to the dispatcher immediately.
5. Drivers should be shown the correct techniques for operating wheelchair lift and restraint equipment and for assisting wheelchair-using passengers.
6. If a local school district, sheriff's department, or other agency offers driver training courses for fleet drivers, take advantage. Money may be saved in maintenance, repair, and insurance costs.
7. Finally, be patient and willing to learn. Experienced operators are an excellent source of advice and can make a new operator's work a great deal easier.

SUMMARY

The field of lightweight accessible bus transportation is relatively new, and there is room for considerable research and development in vehicles and operating techniques. However, with wise vehicle selection, good preventive maintenance, and careful driving, the vehicles now available can be made to give reliable service. The results are worth the effort.

ACKNOWLEDGMENT

The work reported in this paper was performed for UMTA, the Transportation Systems Center, and the Bureau of Urban and Public Transportation of the Michigan Department of Transportation. We wish to acknowledge the assistance of the many manufacturers, agencies, and individuals who provided data. Special thanks are due to Mark Dublin and James Witkowski at Michigan State University and Wolfgang Mueller of the Michigan Department of Transportation.

The contents of this paper reflect our views, and we are responsible for the facts and the accuracy of the data presented. The contents do not necessarily reflect the official views or policies of the U.S. and Michigan Departments of Transportation.

REFERENCES

1. J.D. Brogan and others. Equipment and Maintenance Requirements for Light-Weight Accessible Bus Operations. Michigan Department of Transportation, Lansing, and Transportation Systems Center, Cambridge, MA, Final Rept., May 1980.
2. J. Hayes. Rural Public Transportation Vehicles. U.S. Department of Transportation, Final Rept., Aug. 1979.
3. Adopted Wheelchair Lift Regulations for Buses. California Highway Patrol, Sacramento, Information Bull., July 9, 1979.
4. Institute of Public Administration. Planning

Handbook: Transportation Services for the Elderly. Administration on Aging, U.S. Department of Health, Education, and Welfare, Nov. 1975.
5. Small Bus Specifications. Bureau of Urban and Public Transportation, Michigan Department of Transportation, Lansing, 1976.
6. Vehicle Inspection Handbook: Truck/Bus/School Bus. Engineering Division, Motor Vehicle Manufacturers Assn. of the United States, Inc., Detroit, July 1979.
7. T.K. Ryder. Functional Specifications for Small Transit Vehicles for Use in Handicapped and Elderly Transportation Services. North Central Texas Council of Governments, Arlington, Sept. 1977.
8. L.W. Schneider and J.W. Melvin. Impact Testing of Restraint Devices Used with Handicapped Children in Bus Seats and Wheelchairs. Bureau of Crippled Children, Department of Public Instruction, Madison, WI, Final Rept., Nov. 1978.

Note: The Transportation Research Board does not endorse products or manufacturers. Trade and manufacturers' names appear in this paper because they are considered essential to its object.

Procurement of Small Transit Vehicles

MARC CUTLER

Two aspects of the procurement process for small transit vehicles are described: financing and the bid process. The following financing sources are discussed: (a) federal transportation programs, (b) the Farmers Home Administration, (c) leasing, (d) private financing, (e) non-transportation-specific federal programs, and (f) coordination of vehicles secured from different sources. Although all potential sources of federal funds are generally becoming increasingly limited, there are a number of alternatives to federal transportation programs. In addition, new, creative financing methods are being developed in the private sector. Given today's funding realities, coordination of existing programs and vehicles is essential. Federal procurement requirements are described, and the bid process is followed through from advertisement, preparation of bid documents, and prebid conference to evaluation of bids. Suggestions for contract provisions in such areas as warranty, delivery, inspection, life-cycle costing, and the timing of the process are provided.

The traditional sources of financing for transit vehicles are federal transportation capital assistance programs, which pay 80 percent of vehicle cost. The three principal programs are Sections 3, 16b2, and 18 of the Urban Mass Transportation Act of 1964, as amended.

Sections 3 and 16b2 are administered by the Urban Mass Transportation Administration (UMTA). Section 3 is oriented primarily toward urban public transit systems but, depending on the availability of funding, is an option for any region. Section 16b2 provides handicapped-accessible vehicles to private, nonprofit organizations (PNPs) for the provision of transportation services to the elderly and the handicapped. Section 3 grants may be applied for directly by transit authorities; Section 16b2 is administered by the states.

Section 18 is administered by the Federal Highway Administration (FHWA). It provides capital, operating, and administrative assistance to transportation services in federal-aid nonurbanized areas. Services may be geared toward the provision of transportation for the elderly and the handicapped but must contain a "public transportation" component. Section 18 provides 80 percent reimbursement for capital and administrative projects and 50 percent reimbursement for operating projects.

Section 18 is administered through a state agency. The state may make grants to public or private transportation providers and establish criteria for the distribution of funds within the state. Unlike the UMTA programs, Section 18 is a combined capital, operating, and administrative program. It is the responsibility of the state agency that administers the program to determine the proper mix among the three types of projects.

In all three programs, the 20 percent "matching" share must be provided in hard cash through a combination of state, local, or private funds. Funds to operate vehicles granted through Sections 3 and 18 may be obtained through Section 5 for urban areas and Section 18 for rural areas. There is no provision for federal operating funds for Section 16b2 vehicles.

The Reagan Administration has indicated a commitment to the continued provision of capital assistance (particularly buses). The Administration has proposed gradually phasing out operating assistance to urban areas between FY 1983 and FY 1985 and making Section 18 a "capital-only" program in FY 1983. This could pose a serious problem for many rural areas that have met their capital needs in recent years but require continued operating assistance for the provision of service in low-density, high-mileage areas.

FARMERS HOME ADMINISTRATION

The Farmers Home Administration (FMHA) provides low-interest capital loans to public agencies or nonprofit corporations in rural areas. Its current interest rate is 5 percent, although this is likely to increase in FY 1982. Vehicle loans are generally made for a term of 15 years on buses and a shorter term on smaller vehicles. Agencies may use FMHA loans to finance an entire project, thereby foregoing the use of a federal grant, or to raise the 20 percent "local match". There is no minimum down payment requirement, but obviously a larger down payment increases the chances of receiving the loan.

FMHA operates on a cost-reimbursement basis. The agency or corporation must first purchase the vehicle with its own funds. FMHA requires the collateral of a general-obligation bond from a public agency, and the following collateral from a nonprofit corporation: (a) a promissory note, (b) assignment of income (accounts receivable), and (c) a lien on the vehicle.

The lien requirement can pose a problem where the U.S. Department of Transportation (DOT) also requires a lien, as in the Section 16b2 program. This