North Dakota State Highway Department, Robert T. Peterson, Research Director, in cooperation with FHWA.

REFERENCES

1. AASHTO Guide for Selecting, Locating, and Designing Traffic Barriers. AASHTO, Washington, D.C., 1977.
2. Recommended Procedures for Vehicle Crash Testing of Highway Appurtenances. TRB, Transportation Research Circular 191, Feb. 1978, 27 pp.
3. C.E. Buth and T.J. Hirsch. Improved End Treatment for Metal Beam Guardrail. Texas Transportation Institute, Texas A&M Univ., College Station, Res. Rept. 189-1, May 1977.
4. T.J. Hirsch and T.J. Dolf. Maryland Turned-Down Guardrail Terminal. Texas Transportation Institute, Texas A&M Univ., College Station, Final Rept., May 1980.

Publication of this paper sponsored by Committee on Safety Appurtenances.

Development of Safer Utility Poles

J.J. LABRA, C.E. KIMBALL, JR., AND C.F. McDEVITT

This paper is based on a FHWA-sponsored research program to develop a breakaway retrofit concept for roadside timber utility poles. Southwest Research Institute's efforts to achieve this goal are described. The research included analytical (simulations) as well as experimental efforts. The experimental efforts involved static bending tests, pendulum tests, and full-scale tests of poles with subcompact automobiles. A slip-base concept, called Slipbase, is recommended for implementation along roadsides. Slipbase is capable of reducing significantly the inherent roadside hazards associated with in situ timber utility poles while maintaining a high level of wind-ice resistant bending strength. The slipbase concept cannot be applied universally at this time because no tests have been conducted on poles that carry multicircuit electric lines or on poles that carry joint electric and telephone lines.

Timber poles are not designed to be breakaway structures. Figures 1 and 2 illustrate the result of subcompact cars colliding at 49 km/h (30 mph) and 97 km/h (60 mph) with such poles. In both cases the vehicles sustained substantial damage, but damage to the pole was not appreciable. Accident statistics reveal the frequency and severity of this type of collision. According to the National Highway Traffic Safety Administration (1)

1. More than 4,400 fatal accidents involving utility poles occurred between 1975 and 1977 and
2. More than 8,300 people died in these accidents.

Further, Texas accident files show an injury-to-fatality ratio of 45 to 1 involving this type of accident. If this ratio represents a nationwide average, then an estimated 373,500 injuries involving utility poles occurred between 1975 and 1977 (125,000 injuries per year).

Southwest Research Institute (SwRI) has been investigating the problem of vehicle collisions with utility poles for several years. In an earlier study (2) SwRI investigated the feasibility of developing retrofit designs for in situ timber poles. The objective of the study was to develop an inexpensive retrofit concept that would enable currently nonfrangible poles to break away. The retrofit design was to satisfy the following criteria:

1. Breakaway of pole and acceptable momentum change of vehicle on impact,
2. Sufficient structural integrity of pole to withstand ice- and wind-induced loads,

Figure 1. Unmodified pole crash test at 49 km/h.

Figure 2. Aftermath of 97 km/h impact.

3. Minimization of postbreakaway hazards because of service line rupture or segmented pole trajectory, and
4. Low implementation costs (i.e., labor and materials).

The goal of this study was to achieve a repeatable, nondirection-sensitive pole breakaway when struck by a 1021-kg (2,250-lb) subcompact car at 32 and 96 km/h (20 and 60 mph) by using breakaway criteria from Transportation Research Circular 191 (3). Guidelines from the Circular allow vehicle momentum change of 4893 N-sec (1,100 lb-sec). The environmental criteria involved minimizing the reduction in pole bending strength that results from the retrofit concept. Service lines are attached to utility poles; therefore, breakaway effects on these lines were also considered. Further, because of the substantial number of roadside timber poles, the material and labor costs associated with each retrofit design were weighed carefully.

The research approach was to modify the pole near ground level in a manner that would weaken the shear strength substantially but affect flexural strength less dramatically. Analytical and experimental evaluations were made for more than 20 retrofit designs. Designs included various configurations of bore holes, slots, and shims in combination with various attachments. Their course of evaluation was typically:

1. Computer simulations,
2. Environmental (static bending) tests,
3. Pendulum tests, and
4. Full-scale vehicle tests.

BACKGROUND

A detailed state-of-the-art review of applicable literature was performed to obtain a thorough understanding of the vehicle-utility pole impact phenomenon. Areas included in this review are

1. Types and classes of utility poles,
2. Available vehicle-pole crash statistics,
3. Vehicle-pole impact considerations,
4. Postimpact hazards of breakaway pole, and
5. Environmental factors.

Types and Classes of Utility Poles

An investigation was performed of the existing array of timber utility poles through a literature search and contacts with telephone and power utility companies as well as with pole suppliers and treaters. The ranges of pole geometries and characteristics had to be identified to establish the more representative retrofit candidates. The breakaway concept could then be directed to perform with these representative poles. For nonrepresentative poles the concept could be modified (if necessary) to obtain acceptable performance.

Utility companies were requested to furnish information on the following:

1. Class and length of poles used,
2. Type of wood and preservative,
3. Typical crossarm configurations,
4. Distance between poles, and
5. Design criteria.

In general, the utility companies surveyed conformed to the heavy loading specifications of the National Electrical Safety Code; that is, a transverse load of 192-Pa (4-lb/ft^2) wind on a projected area covered with 12.7-mm (0.5-in.) radial ice and a vertical load of equipment and wire weights with superimposed loads of 12.7-mm (0.5-in.) radial ice on wires, cables, and messengers. For transverse strength calculations the transverse and vertical loads are assumed to be acting simultaneously. Whereas, for longitudinal strength calculations, the assumed longitudinal loads that result from conductor pull imbalance are taken without consideration of the vertical or transverse loads.

According to the utility companies surveyed more than 70 percent of the poles in use are 12 m (40 ft) long or less in class 4 or 5. Southern pine is the most typical wood used (75.5 percent of total), and creosote preservative is the most predominant treatment (53.9 percent of total). Therefore, class 4 and 5 poles 11 to 14 m (35 to 45 ft) long made of creosote-treated Southern pine were recommended and accepted by FHWA as candidate models for retrofit modifications and testing in the study.

Available Vehicle-Pole Crash Statistics

Limited data collected by state and federal agencies indicate that utility poles constitute one of the major roadside hazards on U.S. highways. Specifically, utility pole accidents are estimated to account for more than 5 percent of all national traffic fatalities and more than 15 percent of all fixed-object traffic fatalities (4, p. 36). This amounts to an estimated 2,750 fatalities annually.

The figures for estimated injuries are just as dramatic. Accident data derived from state summaries (4, p. 36) show that approximately 5 percent of all accident injuries and 22 percent of all injuries sustained from fixed-object impacts involved vehicle collisions with utility poles. This correlates with an estimated 110,000 injuries annually that result from utility pole accidents. In addition, an estimated 250,000 utility pole accidents involve property damage only each year.

Although the preceding data are based on contacts with a limited number of states (Kansas, Massachusetts, Michigan, Oklahoma, and Pennsylvania), these data are evidence that utility poles are involved in a significant number of accidents that involve fatalities, injuries, and property damage. Published statistics generally do not convey the extent of this kind of accident because of the lack of established and uniform vehicle accident reporting procedures for secondary and urban roads. Recently, however, various states have indicated a willingness to share their accident data to help define and

solve the utility pole problem (4, p. 36). (Excellent accident records compiled for the U.S. Interstate system cannot be considered representative of vehicle collisions with utility poles because such poles are generally not found on the rights-of-way of these highways.)

Vehicle-Pole Impact Considerations

Roadside Environment

The location of the utility pole with respect to the pavement edge affects the probability of vehicle-utility pole accidents occurring. Research by Skeels (5) concludes that, if a 9-m (30-ft) wide zone adjacent to the roadside is cleared of all fixed objects, motorists involved in approximately 80 percent of single vehicle run-off-the-road incidents could regain control of the errant vehicle and avoid an accident. The placement of utility poles 9 m (30 ft) from the roadside is not always feasible. Therefore, if it is not possible to prevent the probability of vehicle-utility pole impacts, other means are needed to reduce the severity of impact and the probability of injury to the occupants. If the occurrence of a collision is assumed, one of the following approaches is warranted:

1. Modify the utility pole structurally so that it will safely break away on impact by the errant vehicle,
2. Redirect or arrest the vehicle before impact with the pole,
3. Take other countermeasures such as burying the cables or relocating the pole line, or
4. Leave the pole and surroundings unchanged.

The strategy used to determine which approach is optimum with respect to safety and cost is based, in part, on the probable impact speed of the vehicle and the size and location of the pole. For example, Michie and Bronstad (6) recommend barrier shielding for wood poles or posts that have a cross section area greater than 323 cm^2 (50 $in.^2$). Accordingly, no modification was recommended for poles less than 203 mm (8 in.) in diameter because they were expected to break away during most vehicle impacts and the vehicle was expected to sustain only minimum damage. [Note that study results indicate that the 323-cm^2 value is excessive. Nonbreakaway occurred with cross section areas greater than 194 cm^2 (30 $in.^2$).] The pole should be small and light to minimize the danger of fallen wires (especially electrical). For larger poles that are impacted by vehicles at low speeds, small crash cushions may offer more economically attractive alternatives for reducing the severity of impact. Conversely, where the potential of a high-speed impact is great, the most suitable approach may be to modify the utility pole structurally. In essence, before a decision is made about whether to modify the pole or the surroundings the effect a severed pole would have on its environment, including cables, adjacent poles, and pedestrians, must be considered.

Dynamic Interaction of Vehicle and Pole

The dynamic interaction between a vehicle and a utility pole on impact is dependent on numerous variables, such as vehicle size, weight, and crush characteristics; impact velocity; and the geometry and strength characteristics of the pole, as well as any built-in failure mechanism. Basically, this dynamic response can be considered in three phases:

1. Deformation of the vehicle sheet metal before failure of the utility pole,
2. Failure of the pole (at base) through built-in failure mechanism (pole slip or fracture mechanism), and
3. Acceleration of segmented pole structure by impacting vehicle.

During the first phase of this vehicle-utility pole interaction the pertinent variables are impact speed, vehicle weight, and vehicle crush characteristics. These variables are the major factors that affect change in momentum of the impacting vehicle during this phase. (The highway community considers change in vehicle momentum and the change in velocity as the prime factors for estimating impact severity.)

The second phase of the collision involves failure of the pole through a built-in breakaway mechanism. Such a mechanism should reduce the amount of energy required to fracture the pole in a plane near the point of vehicle bumper impact. Because bending is the primary stress at the base of the pole that results from environmental loads, and shearing is the primary mechanism during vehicular impact, the best breakaway configuration is one that will weaken the pole's shear strength without affecting its bending strength significantly. This approach has been used effectively for metal signs and luminaire supports, especially on the Interstate systems. In these cases the principal breakaway mechanisms are

1. Slip joints that depend principally on friction forces developed by the clamping action of bolts torqued to design values to effect the failure mechanisms, and
2. Frangible bases (usually cast aluminum) that fracture on impact.

In a previous study (2) the approach to weaken a pole's shear strength without greatly affecting its bending strength was applied to utility poles by drilling holes or notches in the base of the pole to affect the weakened plane.

Note that during this second impact phase the response of the utility pole may differ substantially from that of signs and light supports. For example, utility poles are connected to adjacent poles by means of service lines and, in certain locations, are restrained by guy lines. The physical constraints imposed by the wires must be considered pertinent factors as well as the inertial constraints of the heavy upper portion of the utility pole.

Finally, during the third impact phase of the vehicle-utility pole interaction, the bottom portion of the pole is accelerated away from the vehicle. If a failure mechanism for the top of the pole has been included in the breakaway design, during this phase the upper portion of the pole and the crossarm-upper pole assembly are separated. The important variables here include upper pole constraints, failure mechanisms (if any), pole moment of inertia, pole mass, and the location of the pole segment center of gravity (c.g.). These variables all contribute to the overall change in vehicle momentum and, hence, the severity of impact.

In summary, the pertinent variables involved with vehicle-utility pole impacts can be categorized according to those related to the vehicle and those related to the pole:

1. Vehicle--Mass, impact velocity, sheet metal crush characteristics, and bumper height (vehicle geometry).

2. Pole--Base breakaway fracture energy (BFE); upper-pole assembly BFE, if any; upper-pole assembly constraints; and mass, c.g. location, and rotational inertia properties.

Postimpact Hazards of Breakaway Timber Pole

In many ways hazards in vehicle-utility pole accidents are analogous to those associated with similar structures. For example, the danger exists that the segmented portion of a timber pole or luminaire will fall on the impacting vehicle or adjacent traffic. Accordingly, the design criteria for structures such as luminaires and sign supports are

1. To break or disengage the structure during vehicular impact without producing hazardous forces in the vehicle, and
2. For segmented parts or elements not to present a hazard to the vehicle occupants or other traffic.

The trajectory hazard of a fractured pole segment may be greater for timber poles, however, because they typically are heavier than metal luminaire and sign supports. Should the pole fall on an impacting vehicle or adjacent traffic, it could cause substantial damage to a vehicle and severe injury to occupants.

Furthermore, unlike luminaires and sign supports, the breakaway timber pole presents the unique problem of cable failure and resulting electrical hazard. During a collision falling live wires would endanger occupants of the vehicle involved, adjacent traffic, and pedestrians. The interruption of power or communications may have a dramatic and adverse effect on a large segment of the population (e.g., the temporary loss of power to a nearby hospital), whereas temporary loss of sign or luminaire support has only a minor effect on public convenience and safety. Hence, care must be taken in the design of any type of breakaway utility pole to ensure the integrity of the service lines and adjacent timber poles.

Figure 3. Storm loading map of United States.

Environmental Factors

In determining the applicability of a potential timber pole breakaway concept its effect on the pole's ability to withstand environmental loadings must be considered. In connection with the preparation of the National Electric Safety Code (N.E.S. code), National Bureau of Standards Handbook H32 (7), studies were made to determine the frequency, severity, and effects of ice and wind storms throughout the country. On the basis of these studies three general areas were distinguished as heavy, medium, and light environmental loading areas in the United States [see Figure 3 (7)]. Basic conductor loadings have been assigned for the three areas to derive pole loadings considered appropriate for these areas and to arrive at the class of pole required for any given line.

This problem of defining typical environmental loads can be reduced somewhat by considering that

Figure 4. Service line dynamic tests.

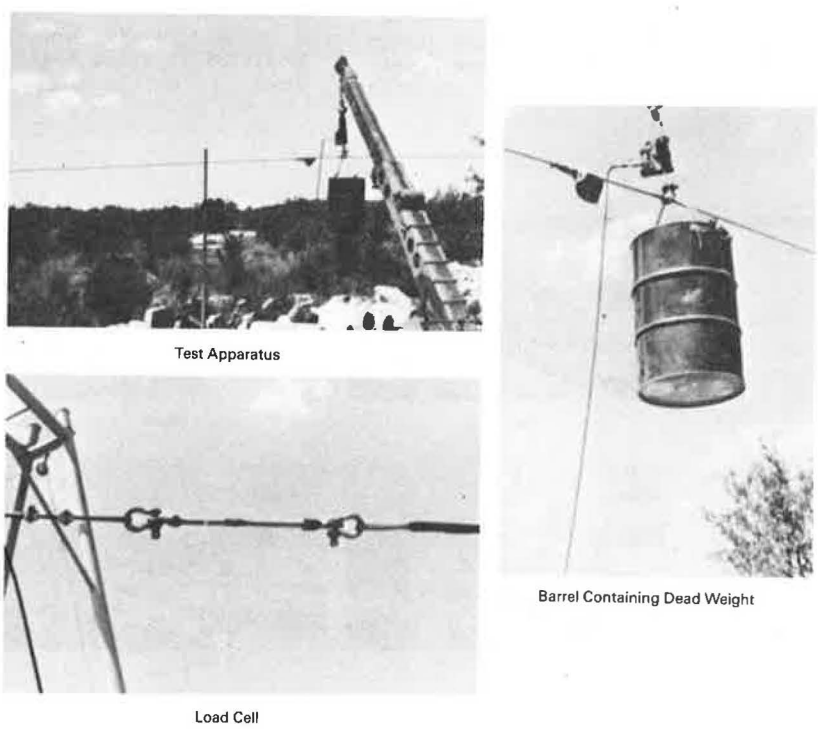

utility companies prefer classes 2, 3, and 4 poles, and telephone companies use more class 4 and 5 poles. At least 80 percent of the telephone company poles are used jointly with utility companies; therefore, class 4 is the most common group. The length most often specified is 12 m (40 ft), and approximately 72 percent of all poles are equal to or less than 12 m (40 ft). In addition, although conductor span lengths range up to 366 m (1,200 ft), most lengths are in the 41- to 91-m (135- to 300-ft) range.

EXPERIMENTAL TESTS

A major portion of the study involved the experimental evaluation of the postimpact performance of vehicle, timber pole, and supporting service lines. In addition, the environmental effect of conceptual retrofit designs on the pole's ability to withstand service wind and ice loadings was considered.

Service Line Dynamic Tests

The postimpact response of service lines after the occurrence of a successful pole breakaway was evaluated to determine the capacity of the service lines to support their own weight as well as any remaining upper pole segment (e.g., crossarm assembly) after impact. SwRI set up a simple test system similar to that shown in Figure 4 to simulate the postimpact response. A suspended center mass represented the upper portion of the utility pole after the lower portion of the pole had broken away. Drop tests were performed using 45.4- and 90.7-kg (100- and 200-lb) weights. Single service lines varying from 8 to 17 mm (0.3 to 0.7 in.) in diameter were tested dynamically by releasing the test mass from a designated height.

The pertinent findings from these drop tests included quantification of the impulse duration that occurred in the service line after the mass had dropped and line slack was eliminated. Clearly, if the dynamic response of the service line was impulsive before testing, then the potential of line rupture or of a pole domino effect would be high; however, the test results in each case demonstrated impulse durations much greater than a full second. These long durations were due to the inherent design associated with stranded cable. In each test, well before the cable reached its ultimate load-carrying capacity, its individual strands stretched. This was evident after each test when the mass was returned to its original position and a notable increase in service line sag was recorded.

Environmental Static Tests

To estimate residual bending strength of retrofitted timber poles, a cantilevering apparatus was constructed (Figure 5). This apparatus consisted of a collar that encompassed each specimen 1.8 m (6 ft) from the base of the pole and behaved as a fixity. A crane with a wire rope and load cell was attached near the free end of a cantilevered specimen. During testing the crane would lift vertically the free end of the horizontally placed pole until the specimen fractured. A Visicorder oscillograph recorded the load magnitudes during the loading of the pole.

More than 160 environmental tests were performed on modified and unmodified poles. Each test imposed bending loads on 40 class 4 and 5 poles using the strength characteristics of unmodified poles as base data. Typically, unmodified poles fractured at load levels 180 percent of design--the latter based on the methodology by Pender and McIlwain (8).

Pendulum Tests

The general procedure for these tests was to subject a timber pole specimen to the type of loading induced when a pole is struck by a 1021-kg (2,250-lb) subcompact car at 32 km/h (20 mph). For the initial testing a facility was designed that consisted of a pendulum, operating equipment, and test control and data collection instrumentation. A 1021-kg (2,250-lb) mass with a crushable honeycomb nose (Figure 6) was suspended so that it remained horizontal throughout the normal swing arc [7.3-m (24-ft) radius]. Each timber specimen was located at the lowest point of the pendulum arc. A damp, uniformly graded sand was tamped about the pole base.

During each test signals from an accelerometer mounted at the rear of the mass were recorded continuously by a high-speed magnetic tape recorder. These signals were later converted from analog to digital data for subsequent processing by a digital computer.

More than 50 pendulum tests were performed on modified 40 class 4 and 45 class 5 poles in an effort to define acceptable breakaway performance

Figure 5. Typical environmental static test.

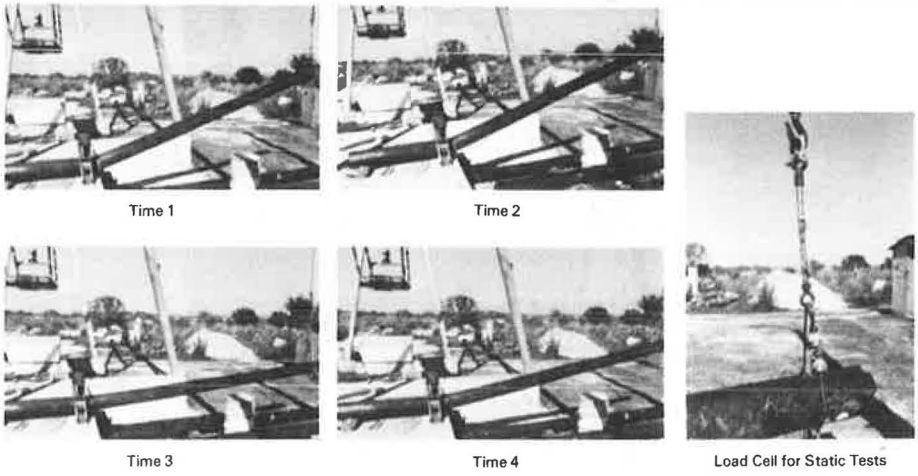

Figure 6. Pendulum test apparatus.

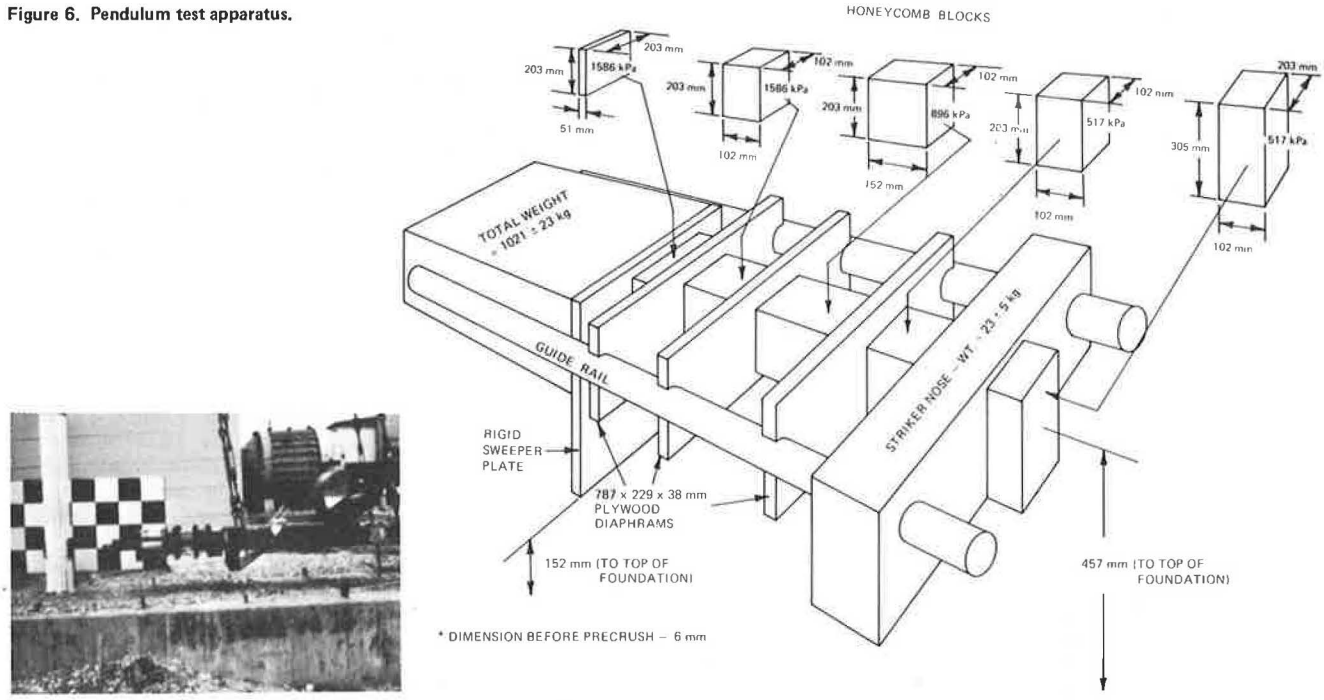

Figure 7. Slipbase design.

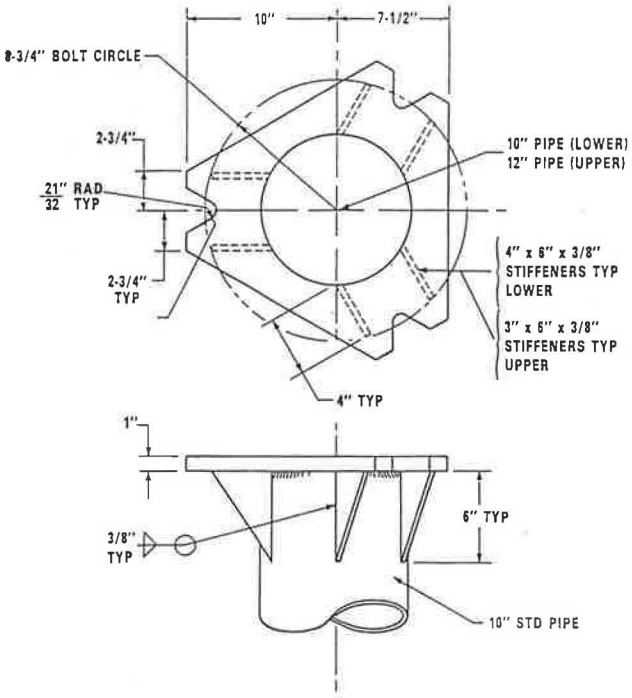

based on the 4893 N•s (1,100 lb-sec) momentum criterion for a 32-km/h (20-mph) impact. In general, concepts other than the Slipbase were deemed marginal or unacceptable either because of pendulum test results or because the corresponding environmental static tests demonstrated low residual bending strength for poles modified with the conceptual retrofit design under consideration.

Full-Scale Tests

Poles were modified by SwRI personnel before setup for the full-scale tests. Service lines were attached to poles either by SwRI or local utility company personnel. In all tests the insulator tie wraps consisted of standard aluminum wire typically used by utilities.

After a conceptual retrofit design had performed successfully during extensive environmental and pendulum tests, the final testing was conducted, which involved full-scale crash tests with subcompact vehicles. Impact events were documented by high-speed photography and vehicle instrumentation. Data from these carefully controlled experiments were then analyzed. The procedures and test conditions were based on guidelines suggested by Bronstad and Michie (9).

RECOMMENDED RETROFIT CONCEPT

Figure 7 illustrates the timber pole retrofit concept (Slipbase) that SwRI considers implementable. Specifically, although material and implementation costs may be high, Slipbase technically complies best with vehicle impact safety criteria. Furthermore, it affects near total bending strength analogous to the unmodified pole.

This concept is based on extensive environmental, pendulum, and full-scale tests performed at SwRI on approximately 20 different conceptual designs. It includes SwRI's effort during a 5-year period.

Slipbase

The retrofitting of in situ timber poles with Slipbase involves segmenting the pole at ground line and placing a 457-mm (18-in.) long cylindrical sleeve (Figure 7) on the exposed end of the embedded stub as well as at the base of the upper timber segment. The lower sleeve typically has a smaller inner diameter (ID) so that it may be press-fit onto the stub. A minimal ground line diameter of 271 mm (10.66 in.) for 40 class 4 poles led SwRI to use as a lower sleeve prototype steel pipes that have IDs of 267 mm and 279 mm (10.5 and 11.0 in.). A family of sleeve sizes could be made available, however, for the wide range of pole sizes.

A 305-mm (12-in.) ID was used for the upper sleeve so that the segmented pole base could slip into place easily. The void between pole and sleeve is then filled with a high compressive strength mortar compound. SwRI used Polegard, manufactured by Monolith Systems, Inc., in the study and an off-the-shelf shear-wall compound.

The upper and lower sleeves are connected through the use of 32-mm (1.25-in.) diameter (slip) bolts that are pretensioned to a 339-N-m (250-ft-lb) bolt torque. A keeper plate is used to prevent the bolts from working loose under typical environmental conditions.

Figure 8. Modifications to upper pole.

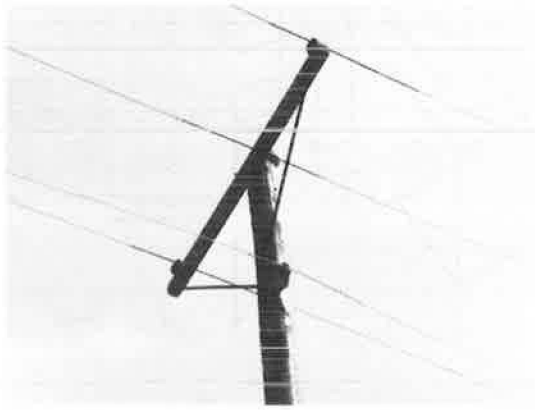

Redirectional rods

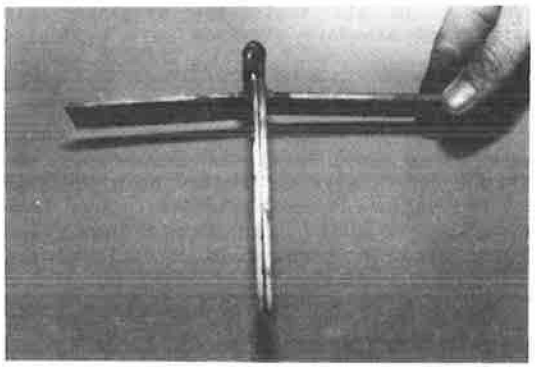

Crossarm Release Mechanism

Slipbase addresses the base of the pole. Once breakaway occurs at the base of the pole and the pole begins to fall the danger of service line rupture must be minimized. Laboratory tests of service lines, as well as pendulum tests, demonstrated that the potential of service line rupture is small because a typical cable is elastic. Further, in SwRI full-scale tests, the aluminum ties used to attach service lines to conductors stripped away as projection of the segmented pole occurred. Because of these findings attention was focused on preventing service line rupture caused by crossarm snagging as the segmented pole rotates away from the vehicle and drops. When multiple crossarms exist redirectional rods used as struts (illustrated in Figure 8) will reduce the potential of service line failure due to snagging on lower crossarms. An additional device that segments the crossarms when the pole is struck by an errant vehicle is the crossarm release mechanism (CRM) shown in Figure 8.

The crossarm release mechanism consists of two sets of a male and female component for each crossarm. A typical crossarm is cut into three parts. The cuts are made adjacent to the infield location of the supporting struts. A female component is attached to each outer crossarm segment and two corresponding male components are attached to the center segment (which is fixed to the pole). On pole breakaway the mass of the segmented pole will result in the pole dropping along with the center crossarm segment. The outer two crossarm segments will remain attached to service lines. Before breakaway the weight of the supported service lines should be sufficient to prevent the male and female elements of the CRM from separating accidentally. The CRM is designed to effect an articulated crossarm during collapse of the pole because of vehicle impact. The potential of service line rupture from crossarm snagging is reduced when the infield crossarms are replaced with units that have these devices. The CRM would also minimize potential of multiple (adjacent) pole failures during a severe storm if the residual strength of a retrofit pole was exceeded.

Notably, the CRM does not address the potential danger associated with a segmented pole landing on the errant vehicle or in the adjacent traffic flow. To minimize this potential hazard a significant volume of wood mass may have to be removed (e.g., a

Table 1. Summary of static tests.

Test No.	Type	Base Circumference (mm)	Design Load[a] (kn-m)	Load Direction	Failure Load (kn-m)	Percentage of Design	Percentage of Minimum 4-40[b] Design	Percentage of Estimate Unmodified[c]	Comments
SB-1	40, Class 4	851	53.8	Wind-ice	119.0[d]	221	221	115	Timber pole slip base (Slipbase) concept; 339 N-m bolt torque; failure below lower collar
SB-2	40, Class 4	851	53.8	Wind-ice	115.2[d]	214	214	111	Same as SB-1 except 254 mm (ID) lower pipe collar replaced with 304.8 mm (ID) pipe and clearance filled with Polecard material[e]
SB-3	40, Class 4	851	53.8	Wind-ice	95.1	177	177	92	Same as SB-1 except 270 mm (ID) lower pipe collar

[a] Based on Pender and McIlwain (8) using a 27.6 MPa design stress.
[b] Design load for 851-mm base circumference is 53.8 kn-m.
[c] Using 53 MPa (7.7 ksi) as ultimate stress—based on earlier SwRI static tests for new poles.
[d] Equivalent load at slip base interface 1.8 m from butt end.
[e] Silicone-base mortar manufactured by Monolith Systems, Inc., New Britain, Conn.

4.0- to 5.0-m breakaway aluminum sleeve replacing a similar length of pole above grade). The material and implementation cost could also, however, be prohibitive in terms of a feasible retrofit concept. Further, the potential trajectory hazard is considered a small and, hence, an acceptable risk in comparison with the well-defined significant hazard associated with roadside nonbreakaway timber utility poles. In all of the 15 full-scale tests performed at SwRI involving breakaway conceptual designs, in only one instance (test FS-13A) did the segmented pole strike the vehicle in a manner that might cause an injury as a direct result of the falling segmented pole.

Environmental Tests

Modification of a timber pole to break away readily on impact inevitably weakens the pole. Yet the pole must be strong enough to withstand severe climatic effects. Environmental static tests were performed on both modified and unmodified timber poles to address this problem.

Baseline static bending tests of unmodified poles resulted in an average failure load of 180 percent of design; the design load for a timber pole is based on the methodology of Pender and McIlwain (8). In these baseline tests, however, failure loads due to pole imperfections (i.e., man-made or natural flaws) were recorded as low as 64 percent of the estimated unmodified pole strength.

Before the development of Slipbase 145 environmental static tests were performed on various potential designs. Three static tests were performed using the slip base retrofit design. As the data given in Table 1 indicate, the failure loads were all high in comparison with the estimated unmodified pole bending strength. The second test, SB-2, did not demonstrate a discernible difference in ultimate bending strength when the press-fit approach with the small, i.e., lower, sleeve was replaced with an oversized version and the void was filled with the silicone compound Polegard. Further, in all three tests the eventual timber fracture occurred below the lower sleeve.

Pendulum Tests

Fifty-seven pendulum tests were performed on various conceptual designs during this study.

A single pendulum test with the Slipbase design was performed (test SB-1) and resulted in satisfactory results. The results of test SB-1 are as follows:

Pole type--40 class 4,
Base circumference--842 mm,
Mass weight--1021 kg,
Impact velocity--8.9 m/sec,
Change in velocity--3.8 m/sec,
Impulse--3896 N-sec,
Duration--77 m/sec,
Peak acceleration--13.3 g, and
Honeycomb crush--376 mm.

This test used the timber pole slip base concept (Slipbase). The impact mass momentum change was greater than the optimum 3336 N-sec (750 lb-sec) criterion, but well below the required 4893 N-sec (1,100 lb-sec) criterion.

Full-Scale Tests

Five full-scale tests were performed using the retrofit concept Slipbase. In each test a late model (1974) subcompact car was used. Tests FS-9 and 10 involved 32-km/h (20-mph) and 97-km/h (60-mph) collisions. Test FS-12 was performed at 48 km/h (30 mph). In each of these tests upper pole redirectional rods or a CRM were used. Tests 13-A and 13-B were performed at 48 km/h and involved vehicle-pole off-center impacts.

FS-9

In the first crash test with the Slipbase-modified 40 class 4 pole, test FS-9, the 32-km/h (20-mph) impact caused a change in vehicle momentum of 5107 N-sec (1,148 lb-sec). This was acceptable and the damage to the vehicle's front end was minor (Figure 9). Unfortunately, after impact at this low speed the segmented pole did not rotate clear of the car and caused extensive damage to the roof (Figure 9).

FS-10

Test FS-10 involved a 97-km/h (60-mph) collision with the subcompact car into a modified 40 class 4 pole. A resulting change in vehicle momentum of 6067 N-sec (1,364 lb-sec) was greater than the Transportation Research Circular 191 criterion (3) because of the inertia effects of the slip base sleeve and the weight of the segmented timber pole. As shown in Figure 10, breakaway occurred readily; however, the segmented pole rotated over the car.

FS-12

Test FS-12 was performed at 48 km/h (30 mph) to observe if at this speed the segmented pole would rotate clear of the vehicle. The segmented portion of the pole did not land on the car (Figure 11); however, this was because the pole fell to the left side of the vehicle and not because the pole segment rotated over the vehicle. As anticipated, the change in vehicle momentum was considered acceptable at 5173 N-sec (1,163 lb-sec).

FS-13 A and B

The previous crash tests with the Slipbase concept demonstrated that whether the pole falls onto the car at speeds of 48 km/h or less is problematic and a function of vehicle size, speed, and location of the front-end impact. To verify this aspect test 13A was proposed as a vehicle-pole off-center collision. Unfortunately, during pole breakaway the vehicle veered to the right because of an impact eccentricity of 387 mm (15.25 in.) and struck the rear of an adjacent guardrail (Figure 12). Accordingly, although the segmented pole fell onto the vehicle and caused extensive damage, a repeat test was warranted.

Test 13B was performed at 48 km/h after the adjacent guardrail was removed. As with test 13A, an off-center impact [432-mm (17-in.) eccentricity] was imposed. In this instance the pole fell clear of the vehicle and the change in momentum of 5462 N-sec (1,228 lb-sec) was survivable (Figure 13).

FS-14

The final full-scale test of the study was a baseline test. Specifically, test FS-14 was performed to delineate the impact severity associated with a 48-km/h collision of a subcompact car into an unmodified pole. Test results shown in Figure 14 demonstrate that such an impact is hazardous to vehicle occupants. Although no noticeable damage to the pole occurred, the engine block was pushed against the firewall. A vehicle change in momentum of 14 509 N-sec (3,262 lb-sec) was realized and the

Figure 9. Full-scale test FS-9.

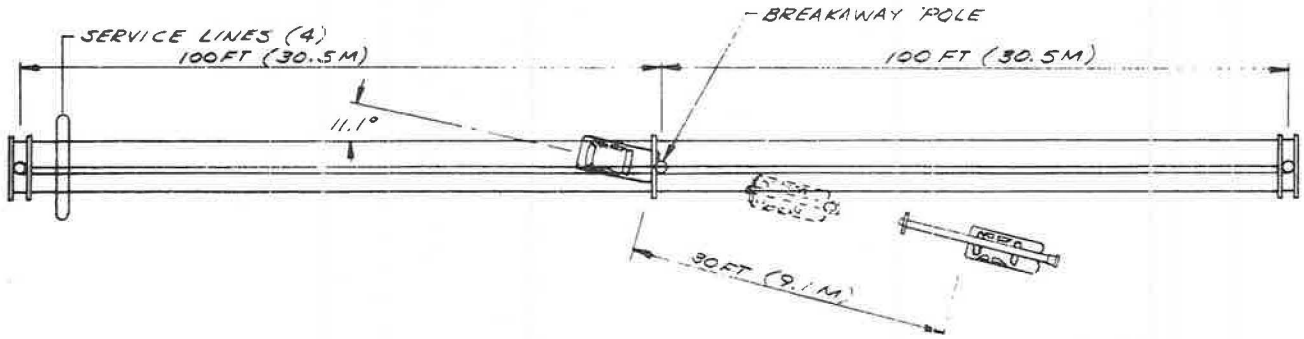

Pole Data	Vehicle Data	Test Results
Type ..... 40 Class 4	Type ..... 1974 Chevrolet Vega	Linear Impulse .....1148 lb-sec (5107 N-sec)
Base Diameter ..... 11.6 in. (295 mm)	Weight ..... 2250 lb (1021 kg)	50 ms Average Acceleration
LPBM(1) ..... Triangular Slip Base	Impact Speed ..... 20.8 mph (33.5 kmph)	Longitudinal (Cine/Accelerometer) .... -3.0 g/-6.9 g
UPBM(2) ..... Crossarm Release Mechanism	Impact Angle ..... 11.1 deg	Lateral (Cine/Accelerometer) ..... -0.4 g/0
Service Line Type ..... 2 ACSR (0.316 in. dia)		Maximum Vehicle Crush ..... 14.5 in. (368 mm)
		Impact Duration ..... 85 msec

Notes:
(1) Lower Pole Breakaway Mechanism
(2) Upper Pole Breakaway Mechanism

Figure 10. Full-scale test FS-10.

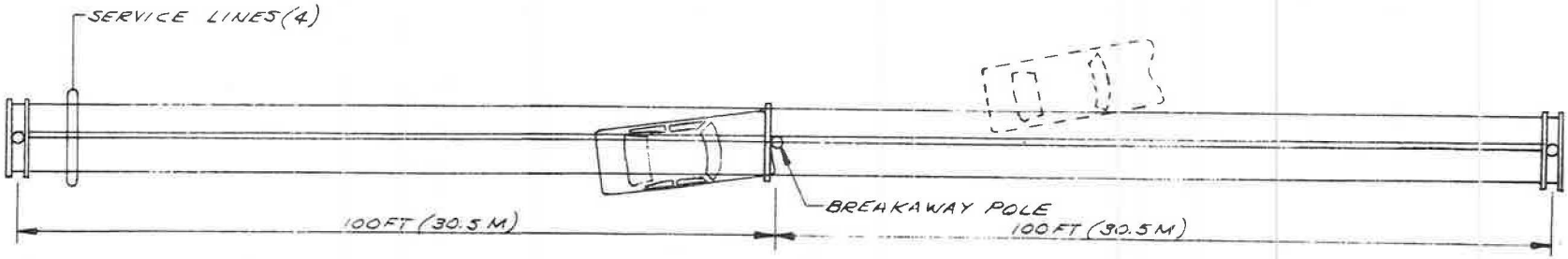

Pole Data	Vehicle Data	Test Results
Type ..... 40 Class 4	Type ..... 1974 Chevrolet Vega	Linear Impulse ..... 1364 lb-sec (6067 N-sec)
LPBM(1) ..... Slip-Base Triangular Plate	Weight ..... 2415 lb (1095 kg)(3)	50 msec Avg Acceleration (Film Analysis)
UPBM(2) ..... Crossarm Release Mechanism	Impact Speed ..... 59.8 mph (96.2 kmph)	Longitudinal ..... -6.1 g
Service Line Type ..... 2 ACSR (0.316 in. dia)	Impact Angle ..... 8 deg	Lateral ..... -0.5 g
		50 msec Avg Acceleration (Accelerometer)
		Longitudinal ..... -8.3 g
		Lateral ..... -6.0 g
		Maximum Vehicle Crush ..... 17 in. (432 mm)
		Impact Duration ..... 70 msec

Notes:
(1) Lower Pole Breakaway Mechanism
(2) Upper Pole Breakaway Mechanism
(3) Weight includes vehicle, instrumentation, and one 50th percentile dummy

Figure 11. Full-scale test FS-12.

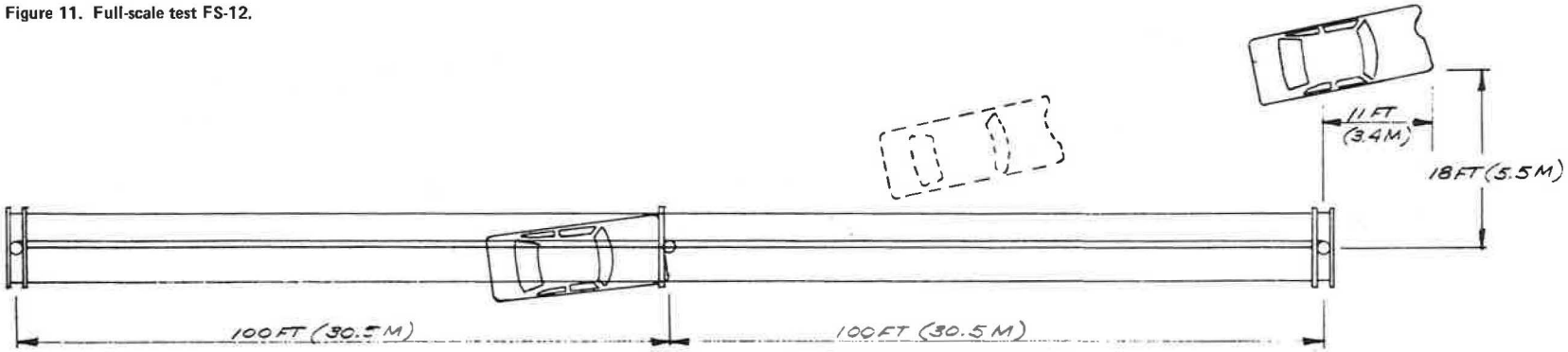

Pole Data		Vehicle Data		Test Results	
Type	40 Class 4	Type	1974 Chevrolet Vega	Linear Impulse	1163 lb-sec (5173 N-sec)
LPBM(1)	Slip-Base Triangular Plate	Weight	2600 lb (1179 kg)(3)	50 msec Avg Acceleration (Film Analysis)	
UPBM(2)	None	Impact Speed	31.5 mph (50.7 kmph)	Longitudinal	-5.0 g
Service Line Type	2 ACSR (0.316 in. dia)	Impact Angle	5.2 deg	Lateral	0.4 g
				50 msec Avg Acceleration (Accelerometer)	
				Longitudinal	-7.0 g
				Lateral	1.0 g
				Maximum Vehicle Crush	12.5 in. (318 mm)
				Impact Duration	120 msec

Notes:
(1) Lower Pole Breakaway Mechanism
(2) Upper Pole Breakaway Mechanism
(3) Weight includes vehicle, instrumentation, and one 50th percentile dummy

Figure 12. Full-scale test FS-13A.

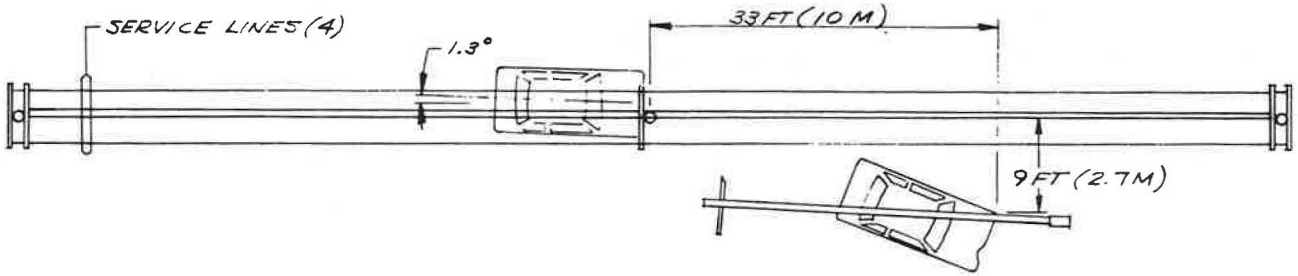

Pole Data		Vehicle Data		Test Results	
Type	40 Class 4	Type	1974 Chevrolet Vega	Velocity Change	
LPBM(1)	slip-base triangular plate	Weight	2600 lb (1179 kg)(3)	Film Analysis	13.22 ft/sec (4.03 m/sec)
UPBM(2)	none	Impact Speed	30.3 mph (48.8 kmph)	Accelerometer	9.58 ft/sec (2.92 m/sec)
Service Line Type	2ACSR (0.316 in. dia)	Impact Angle	-1.3 deg	50 msec Average Acceleration	
		Impact Point	15.25 in. (387 mm) to right of vehicle centerline	Longitudinal (film analysis/accelerometer)	-5.2g/-5.4g
				Lateral (film analysis/accelerometer)	-1.2g/-1.9g
				Maximum Vehicle Crush	9.5 in. (241 mm)
				Impact Duration	120 msec

Notes:
(1) Lower Pole Breakaway Mechanism
(2) Upper Pole Breakaway Mechanism
(3) Weight includes vehicle, instrumentation, and one 50th percentile dummy

Figure 13. Full-scale test FS-13B.

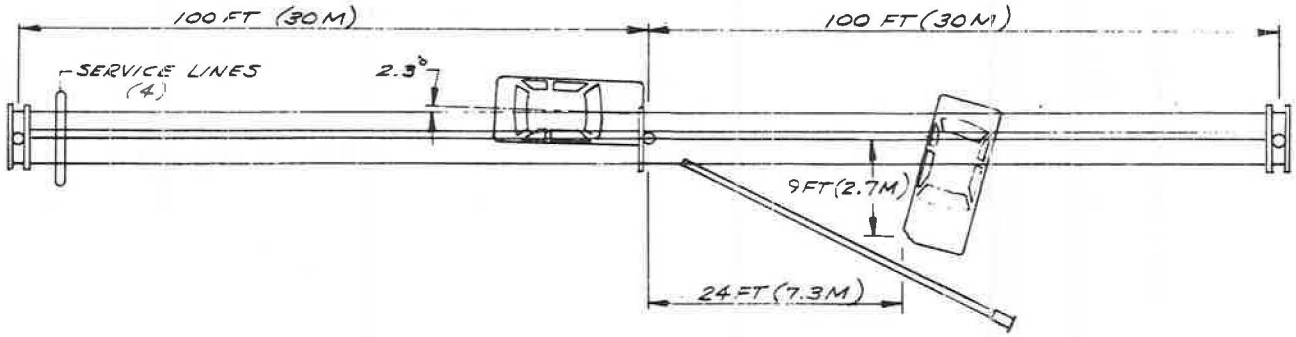

Pole Data

Type ..... 40 Class 4
LPBM(1) ..... slip-base triangular plate
UPBM(2) ..... none
Service Line Type ..... 2ACSR (0.316 in. dia)

Vehicle Data

Type ..... 1974 Chevrolet Vega
Weight ..... 2600 lb (1179 kg)(3)
Impact Speed ..... 31.0 mph (49.9 kmph)
Impact Angle ..... -2.3 deg
Impact Point .... 17.0 in. (432 mm) to right of vehicle centerline

Test Results

Velocity Change
  Film Analysis ..... 16.23 ft/sec (4.95 m/sec)
  Accelerometer ..... 17.43 ft/sec (5.31 m/sec)
50 msec Average Acceleration
  Longitudinal (film analysis/accelerometer)... -4.8g/-3.7g
  Lateral (film analysis/accelerometer)..... 0.8g/2.3g
Maximum Vehicle Crush ..... 11.0 in. (279 mm)
Impact Duration ..... 180 msec

Notes:
(1) Lower Pole Breakaway Mechanism
(2) Upper Pole Breakaway Mechanism
(3) Weight includes vehicle, instrumentation, and one 50th percentile dummy

Figure 14. Full-scale test FS-14.

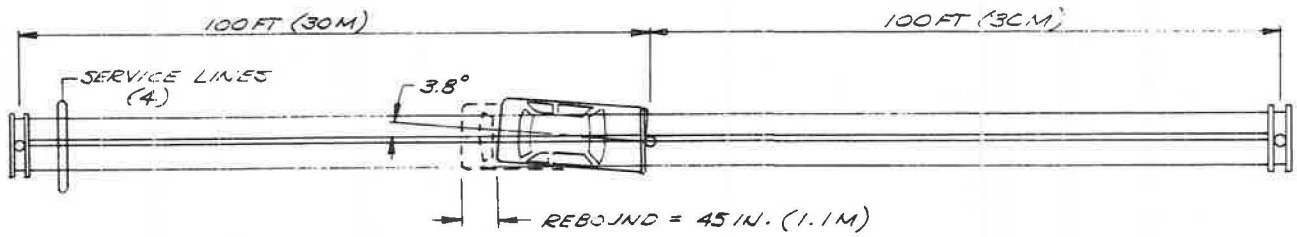

Pole Data

Type(1) ..... 40 Class 4
LPBM ..... none
UPBM(2) ..... none
Pole Diameter ..... 10.82 in. (275 mm)
Service Line Type ..... 2ACSR (0.316 in. dia)

Vehicle Data

Type ..... 1974 Chevrolet Vega
Weight ..... 2600 lb (1179 kg)(3)
Impact Speed ..... 29.4 mph (47.3 kmph)
Impact Angle ..... -3.8 deg
Impact Point ..... vehicle centerline

Test Results

Velocity Change
  Film Analysis ..... 43.1 ft/sec (13.1 m/sec)
  Accelerometer ..... 43.1 ft/sec (13.1 m/sec)
50 msec Average Acceleration
  Longitudinal (film analysis/accelerometer) .... -12.8g/-22.4g
  Lateral (film analysis/accelerometer) ..... -0.2g/-1.5g
Maximum Vehicle Crush ..... 22.0 in. (559 mm)
Impact Duration ..... 110 msec

Notes:
(1) Upper Pole Breakaway Mechanism
(2) Lower Pole Breakaway Mechanism
(3) Weight includes vehicle, instrumentation, and one 50th percentile dummy

impact forces resulted in the failure of the dummy's shoulder harness. This, in turn, caused the dummy to strike the steering column. The impact severity to the head and thorax region was noted by peak acceleration readings of -65.4 and -40 g, respectively; these readings were recorded by accelerometers in the head and thoracic cavity of the dummy.

Slipbase Test Summary

The Slipbase device in all crash tests shows its ability to activate when struck by an errant subcompact car at speeds of 32 to 97 km/h (20 to 60 mph). The possibility exists of the segmented pole landing on the vehicle and causing serious injury. The alternative of striking the unmodified pole, however, is thought to pose a greater risk to vehicle occupants under identical impact conditions (i.e., speed, impact location, vehicle size). Notably, in all tests, whether or not the CRM was employed as an upper pole breakaway mechanism, no service line failure was caused by the strip-away action of the aluminum ties.

SUMMARY AND CONCLUSIONS

Annually, nearly 2,000 fatalities and 125,000 injuries are caused by vehicle-utility pole accidents. Timber utility poles are one of the most hazardous roadside features because of the number used and their placement close to the pavement. Of the more than 20 conceptual designs investigated in the program, the Slipbase design exhibited the best performance in terms of the severity of vehicle impact and capacity for environmental loading.

The full-scale crash tests all involved post-1973 subcompact cars. The tests were conducted on 40-ft class 4 poles that supported four 2ASR conductors. Breakaway was realized in 32-, 48-, and 97-km/h (20-, 30-, and 60-mph) impact tests with 12-m (40-ft) class 4 poles. Change in vehicular momentum was measured at 5106 N-sec (1,148 lb-sec) for the 32-km/h (20-mph) collision. Postimpact pole segment inertia effects increased the change in momentum slightly to 6067 N-sec (1,364 lb-sec) in the 97-km/h (60-mph) crash test. In the three 48-km/h (30-mph) tests, as anticipated, good change in vehicle momentum occurred [i.e., 5173, 4448, and 5462 N-sec (1,163, 1,000, and 1,228 lb-sec)]. The potential exists for a segmented timber pole to fall onto the vehicle and cause significant damage and possible injury; however, the risk of injury to an occupant involved with a vehicle impact into an unmodified pole is believed to be far greater.

The design capacity of a 40 class 4 pole is 53.8 kN-m (39.7 ft-kips) based on the minimum specified circumference and a 27.6 MPa (4.0 ksi) design stress. A maximum wood fiber stress of 51.0 MPa (7.4 ksi) is given by Pender and McIlwain (8) for creosote Southern pine and Douglas fir poles. Experimental findings in this program for used poles demonstrated a 49.1 MPa (7.12 ksi) mean and standard deviation (σ) of 6.8 MPa (0.98 ksi). Based on minimal 40 class 4 pole diameter specifications, a designer can expect that as many as 15 percent of the poles supplied will have a moment capacity of less than 82.5 kN-m (60.9 ft-kips). At the other extreme, the pole may have a moment capacity of more than 135.5 kN-m (100 ft-kips), depending on the actual circumference and wood fiber strength.

The Slipbase design did not fail structurally in any of the static bending tests performed with 40 class 4 timber poles. Slipbase developed the full pole bending strength of each pole in these tests. In all three tests performed the timber fractured below grade at the edge of the lower steel collar. The ultimate bending strength was 115, 111, and 92 percent of estimated unmodified timber pole bending strength. The costs associated with the implementation of Slipbase have not been estimated. Estimated cost for material is $200 for a steel unit.

Additional research and development work is planned to reduce the cost of the Slipbase hardware and to develop a new breakaway mechanism that would segment the pole about 16 ft above the ground. Additional full-scale tests will also be conducted on poles that carry joint electric and telephone lines and on poles that have multiple crossarms, guy wires, and heavy equipment, such as transformers or switches, in order to better define the performance limits of the Slipbase concept.

REFERENCES

1. Fatal Accident Recording Sytem. NHTSA, 1975-1977.
2. G.K. Wolfe and J.D. Michie. Development of Breakaway Concepts for Timber Utility Poles. Southwest Research Institute, San Antonio, Tex., Feb. 1973.
3. Recommended Procedures for Vehicle Crash Testing of Highway Appurtenances. TRB, Transportation Research Circular 191, Feb. 1978.
4. N.L. Graf, J.V. Boos, and J.A. Wentsworth. Single-Vehicle Accidents Involving Utility Poles. TRB, Transportation Research Record 571, pp. 36-43.
5. P.C. Skeels. The Role of the Highway in a Safe Transportation System. Presented at the 65th Annual Convention, American Road Builder's Association, Washington, D.C., 1968.
6. J.D. Michie and M.E. Bronstad. Location, Selection, and Maintenance of Highway Traffic Barriers. NCHRP, Rept. 118, 1971, 96 pp.
7. National Bureau of Standards. Safety Rules for the Installation and Maintenance of Electric Supply and Communication Lines--Comprising Part II, the Grounding Rules of the 5th Edition of National Electrical Safety Code H32, 5th ed. U.S. Government Printing Office, 1941.
8. H. Pender and K. McIlwain. Electrical Engineers Handbook, 4th ed. Wiley, New York, 1950.
9. M.E. Bronstad and J.D. Michie. Recommended Procedures for Vehicle Crash Testing of Highway Appurtenances. NCHRP, Rept. 153, 1974, 19 pp.

Publication of this paper sponsored by Committee on Safety Appurtenances and Committee on Utilities.