TRANSPORTATION RESEARCH RECORD 942

Development of Safer Highway Appurtenances and Utility Poles

TRANSPORTATION RESEARCH BOARD

NATIONAL RESEARCH COUNCIL
NATIONAL ACADEMY OF SCIENCES
WASHINGTON, D.C. 1983

Transportation Research Record 942
Price $8.20
Edited for TRB by Susan Singer-Bart

mode
1 highway transportation

subject areas
21 facilities design
51 transportation safety

Library of Congress Cataloging in Publication Data
National Research Council. Transportation Research Board.
Development of safer highway appurtenances and utility poles.

(Transportation research record; 942)
Reports prepared for the 62nd annual meeting of the Transportation Research Board of the National Research Council.
1. Roads–Safety measures–Addresses, essays, lectures. 2. Roads–Accessories–Addresses, essays, lectures. 3. Electric lines–Poles and towers–Addresses, essays, lectures. I. National Research Council (U.S.). Transportation Research Board. II. Series.
TE7.H5 no. 942 [TE228] 380.5 s [625.7'94] 84-14885
ISBN 0-309-03661-5 ISSN 0361-1981

Sponsorship of the Papers in This Transportation Research Record

GROUP 2–DESIGN AND CONSTRUCTION OF TRANSPORTATION FACILITIES
Robert C. Deen, University of Kentucky, chairman

General Design Section
Samuel V. Fox, Texas State Department of Highways and Public Transportation, chairman

Committee on Safety Appurtenances
Hayes E. Ross, Jr., TTI, Texas A&M University, chairman
Gordon A. Alison, William E. Behm, Jeffrey Alan Bloom, James E. Bryden, Arthur M. Dinitz, Malcolm D. Graham, C. William Gray, James R. Hackney, James H. Hatton, Jr., Roger W. Hove, William W. Hunter, Max N. Jensen, Frank N. Lisle, Jarvis D. Michie, Roy J. Mohler, John F. Nixon, Eric F. Nordlin, Edward Robert Post, William L. Raymond, Jr., F.G. Schlosser, Flory J. Tamanini, Harry W. Taylor, John G. Viner

Committee on Utilities
Ronald L. Williams, West Virginia Department of Highways, chairman
James H. Anderson, William J. Boegly, Jr., Orbie M. Campbell, James A. Carney, Arlen M. Hardisty, Albert R. Heidecke, David L. Houchin, Don H. Jones, James E. Kirk, C. Richard Kuykendall, John J. Labra, Albert F. Laube, Roger C. McPherson, Joe G. Osendorf, Edward Robert Post, Barry M. Sweedler, Kenneth W. Walker

Lawrence F. Spaine, Transportation Research Board staff

Sponsorship is indicated by a footnote at the end of each report. The organizational units, officers, and members are as of December 31, 1982.

Contents

Authors of the Papers in This Record

Arnold, Althea, Texas Transportation Institute, Texas A&M University, College Station, Tex. 77843
Bronstad, M.E., Southwest Research Institute, 6220 Culebra Road, San Antonio, Tex. 78284
Bryden, James E., Engineering Research and Development Bureau, New York State Department of Transportation, State Campus, Albany, N.Y. 12232
Calcote, L.R., Southwest Research Institute, 6220 Culebra Road, San Antonio, Tex. 78284
Fortuniewicz, Jan S., Engineering Research and Development Bureau, New York State Department of Transportation, State Campus, Albany, N.Y. 12232
Hirsch, T.J., Texas Transportation Institute, Texas A&M University, College Station, Tex. 77843
Ivey, D.L., Texas Transportation Institute, Texas A&M University, College Station, Tex. 77843
Kimball, C.E., Jr., Southwest Research Institute, 6220 Culebra Road, San Antonio, Tex. 78284
Labra, J.J., Southwest Research Institute, 6220 Culebra Road, San Antonio, Tex. 78284
Marquis, Eugene L., Texas Transportation Institute, Texas A&M University, College Station, Tex. 77843
McDevitt, C.F., Office of Research, FHWA, U.S. Department of Transportation, 400 7th Street, S.W., Washington, D.C. 20590
Peterson, Robert T., North Dakota State Highway Department, P.O. Box 897, Bismarck, N. Dak. 58501
Phillips, Richard G., Engineering Research and Development Bureau, New York State Department of Transportation, State Campus, Albany, N.Y. 12232
Ross, Hayes E., Jr., Texas Transportation Institute, Texas A&M University, College Station, Tex. 77843
Sicking, Dean L., Texas Transportation Institute, Texas A&M University, College Station, Tex. 77843

Development of Retrofit Railings for Through Truss Bridges

M.E. BRONSTAD, L.R. CALCOTE, C.E. KIMBALL, JR., AND C.F. McDEVITT

The design and development of bridge railing systems for through truss structures are described in this paper. The unique design of these structures makes rigid railings mandatory to exclude the errant vehicles from the truss members located behind the railing. The two systems were designed to meet different performance conditions. The high-performance system contained and redirected a 20,000-lb (9000-kg) bus impacting at 55 mph (90 km/h) and a 15-degree angle. The low-service-level system contained and redirected a 4,500-lb (2000-kg) car impacting at 60 mph (95 km/h) and a 15-degree angle. In addition, 2,250-lb (1000-kg) and 1,800-lb (800-kg) cars were used to evaluate the systems, including the bridge approach railing, for the high-performance system. The two systems meet the design criteria and are recommended for immediate implementation.

The focus of this paper is on a particular type of bridge that has unique problems. The superstructure of these bridges is mostly above the bridge deck, thus critical structural members are exposed to contact with out-of-control vehicles. Furthermore, because many of the older through truss structures are narrow, the clearances for bridge railing protection of the truss members are restrictive and little space is available for barriers and barrier deflection under impact.

Catastrophic failures of these structures occur periodically, and some gain nationwide attention (see Figure 1). Structurally adequate bridges can collapse because of inadequate protection for bridge railings. Many of the older through truss structures have relatively long spans and would require large expenditures to replace them with more modern structures. For this reason FHWA considers the development of protective bridge railing systems for these unique structures as a cost-effective way to keep these otherwise structurally sound bridges in service and also to minimize the potential for catastrophic events.

OBJECTIVE AND SCOPE

The objectives of the research effort were to identify the important characteristics of through truss structures and to design and develop retrofit designs to protect vital structural members from impact by out-of-control vehicles.

Figure 1. Through truss failure.

This project involved background studies, structural analyses, laboratory experiments, computer simulation, and full-scale crash tests. Vehicles used in the crash tests ranged from 1,800-lb (800-kg) subcompact cars to 20,000-lb (9000-kg) school buses.

Design drawings were prepared for bridge railings according to two levels of service. The higher-level railing was designed to contain and redirect a 20,000-lb (9000-kg) bus impacting at 55 mph (90 km/h) and a 15-degree angle without subsequent damage to a truss member behind the barrier. The lower-level railing was designed to contain and redirect a 4,500-lb (2000-kg) sedan impacting at 60 mph (95 km/h) and a 15-degree impact angle.

DESIGN CRITERIA

Design criteria were formulated for both the high-performance and the lower-service systems.

High-Performance Retrofit

Based on considerations detailed in the project report (1) a high-performance retrofit was to be essentially a rigid railing for a 55-mph (90-km/h), 15-degree angle impact with a 20,000-lb (9000-kg) school bus. In addition, the roll of the vehicle was to be limited to keep the bus out of the truss member zone.

Movies of school bus tests conducted at Texas Transportation Institute were reviewed to evaluate vehicle roll. Sequential test photographs showed the maximum roll of the vehicle during the nominal 60-mph (95-km/h), 15-degree angle tests. The rigid 27-in. (0.7-m) railing produced roll that could not be tolerated in this project (i.e., the truss members would be struck). Even with a flexible collapsing ring bridge rail (2) the maximum roll angle would be sufficient to involve the truss members. Therefore, an upper railing element was thought necessary to prevent such contact.

Low-Service Retrofit

A low-service retrofit is for use on bridges that, by virtue of geometry, vehicle mix, or other considerations, would not require the protection of the high-performance railing system. Selection of the structural adequacy test for this system was based, in part, on a recently completed NCHRP research project at the Southwest Research Institute (3). This project developed a multiple-service-level approach for the placement of bridge railings based on need. The lowest service level from this project has a strength test requirement characterized by a 4,500-lb (2000-kg) car impact at 60 mph (95 km/h) and a 15-degree angle. A summary of the design criteria for the two bridge railing systems is presented in Table 1.

PRELIMINARY DESIGNS AND ANALYSES

Preliminary designs and analyses were conducted that led to prototype barrier crash tests. The results of these preliminary investigations are available in the project report (1).

BARRIER DEVELOPMENT

High-Performance Retrofit

Based on results of preliminary tests TTR-1 and TTR-2, a self-restoring 3-in. (75-mm) stroke was incorporated into the lower beam-mounting detail, as shown in Figure 2. This was done to temper the abrupt redirection of the bus caused by more rigid designs. Installation photographs are shown in Figure 3.

The bus impacted the barrier at 53.9 mph (86.7 km/h) and a 15.3-degree angle. As shown in Figure 4, the bus rolled a maximum of 10.7 degrees toward the barrier as it was redirected. The right front wheel was pushed rearward by the lower rail, which caused suspension failure and forced the entire front axle to rotate. After losing contact with the barrier the vehicle dropped onto the now horizontal front right wheel and slid to a stop essentially parallel to the barrier (see Figure 5). The maximum deflections were such that the 3-in. (75-mm) en-

Table 1. Summary of design criteria.

Item	Low-Service Retrofit	High-Performance Retrofit
Structural adequacy test		
Vehicle weight (lb)	4,500	20,000
Impact speed (mph)	60	55
Impact angle (degree)	15	15
Deflection permitted (in.)[a]	6	
Vehicle roll considerations	NA	[b]
Impact Severity[c]		
Vehicle weight (lb)	1,800	1,800
Impact speed (mph)	60	60
Impact angle (degree)	15	15

[a]Deflection is measured from behind the bridge post.
[b]Vehicle roll over the barrier should be limited to keeping the vehicle within maximum deflection limit.
[c]The barrier is rigid so the usual acceleration criteria are not applied; however, smooth redirection with no snagging is required.

Figure 2. Modified self-restoring through truss retrofit.

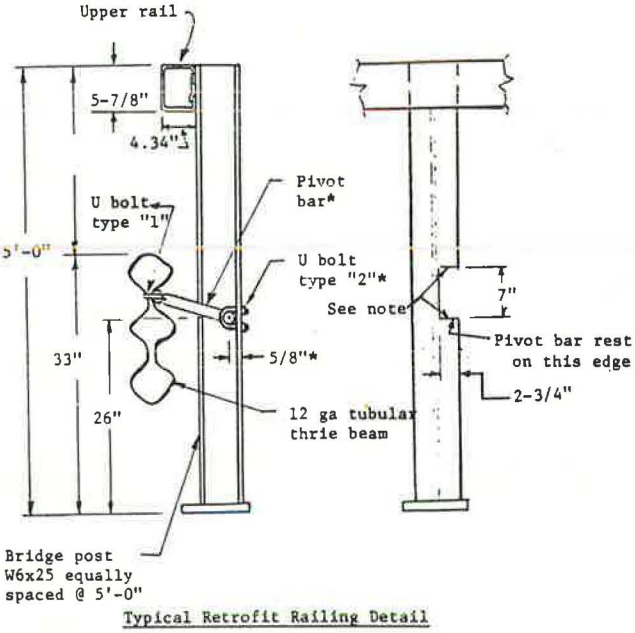

Note: *Flange notched at hinge only bridge post details

Figure 3. Self-restoring high-performance retrofit photographs.

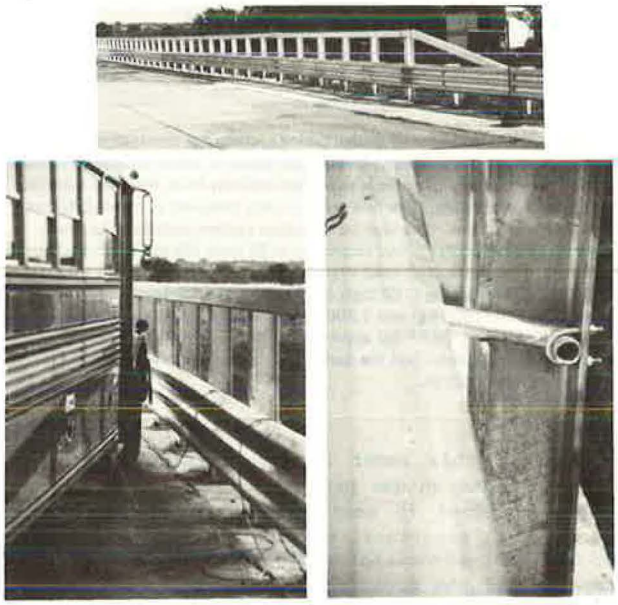

Figure 4. TTR-3 impact sequence.

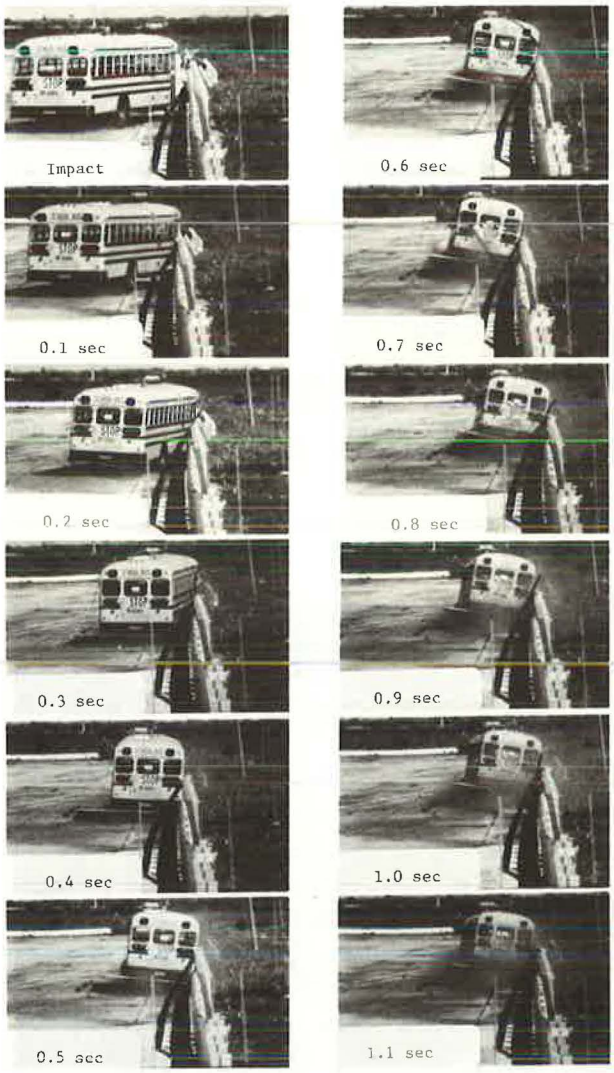

croachment goal beyond the rear post line was met. The roll of the vehicle and the exit conditions were also considered favorable. Some sheet metal snagged on posts at the opening between upper and lower rails (see Figure 5).

Figure 5. Photographs after test TTR-3.

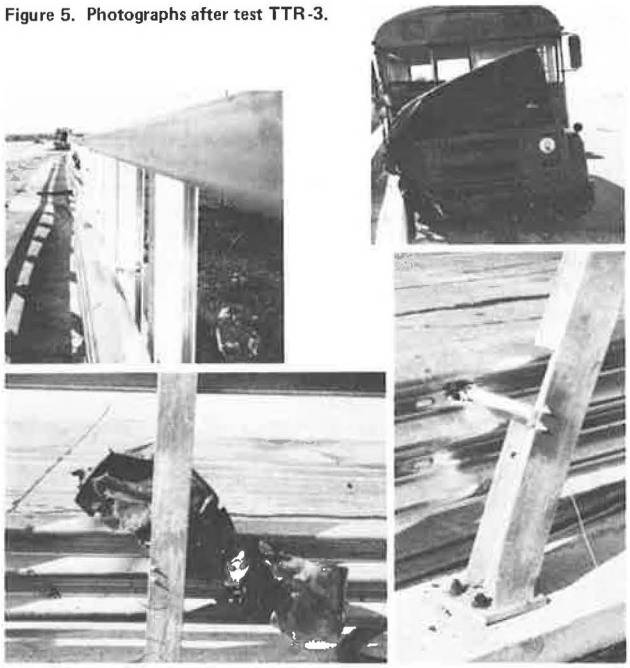

Figure 6. Test TTR-4 impact sequence.

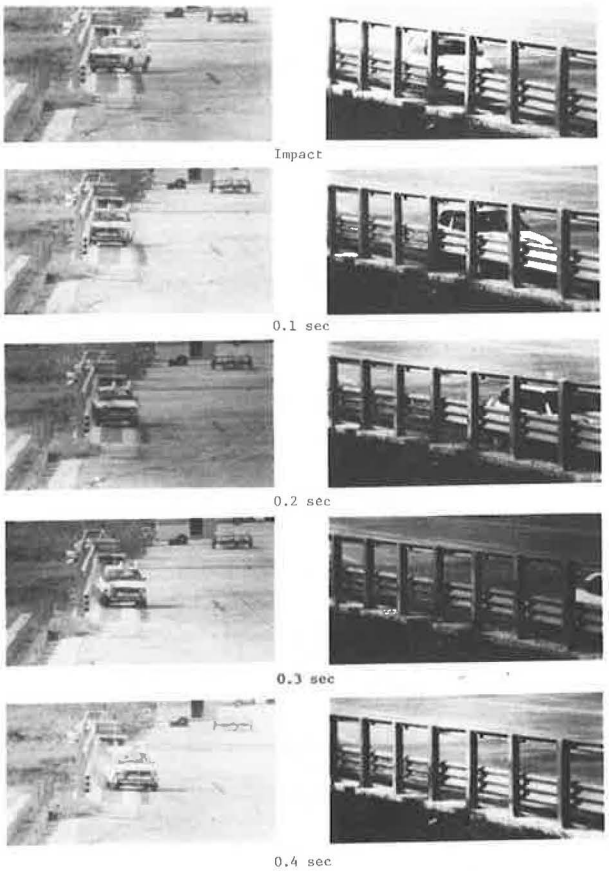

Test TTR-4

In test TTR-4 the 1,840-lb (835-kg) vehicle impacted the barrier at 59.8 mph (96.2 km/h) and a 14.8-degree angle. As shown in Figure 6 the beam displaced up and back during the collision and then returned to the original position. The barrier systems sustained no discernible damage; damage to the vehicle was moderate (see Figure 7).

The basic bridge railing approach and terminal treatment are shown in Figure 8. The upper railing was carried full height beyond the structure for five post spans and tapered down and back behind the lower railing as shown. The self-restoring hinges were installed on intermittent W6 x 15.5 posts.

Test TTR-5

In test TTR-5 the 20,000-lb (9070-kg) bus impacted the transition 15 ft (4.6 m) upstream of the bridge end at 59.6 mph (95.9 km/h) and a 15.9-degree angle. As shown in Figure 9, the bus pitched upward as it rolled toward the barrier (maximum roll angle was 15 degrees) while being redirected, and then returned to an upright position. The right front wheel was pushed rearward by the lower rail, which caused suspension failure and forced the entire front axle to rotate about a vertical axis. As the bus lost contact with the barrier, the front dropped down onto the right front wheel similar to test TTR-3 and slid 90 ft (27 m) past the end of the installation. A secondary collision with another barrier downstream caused additional front-end damage.

Figure 7. Photographs after test TTR-4.

Figure 8. High-performance retrofit approach guardrail.

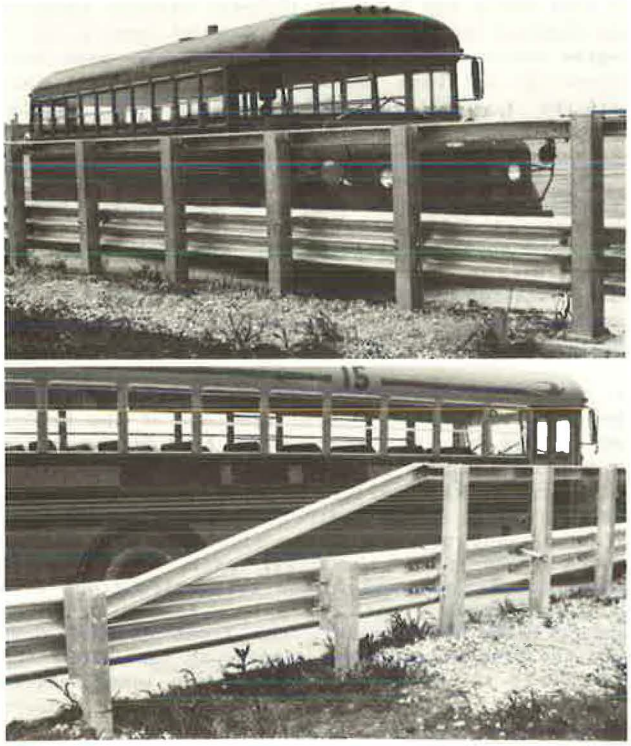

Figure 9. Test TTR-5 impact sequence.

Damage to the barrier consisted of two upper and lower beam sections and two bridge posts. Some concrete fracturing occurred at the two bridge posts. The soil-mounted posts were displaced in the soil but were essentially undamaged. The bus sustained front suspension and steering linkage damage sufficient to dislodge the front axle from is mounting. The barrier deflection was significant, but in an acceptable range regarding intrusion into a leading truss member location. Photographs after the test are shown in Figure 10.

Test TTR-6

Test TTR-6 was performed to evaluate typical bridge rail performance with a 2,250-lb (1020-kg) compact at 60 mph (95 km/h) and 15 degrees, which is the standard impact severity test according to TRB Circular 191 (4).

The 2,250-lb (1020-kg) vehicle impacted the barrier at 58.8 mph (94.7 km/h) and an angle of 15.4

Figure 10. Photographs after test TTR-5.

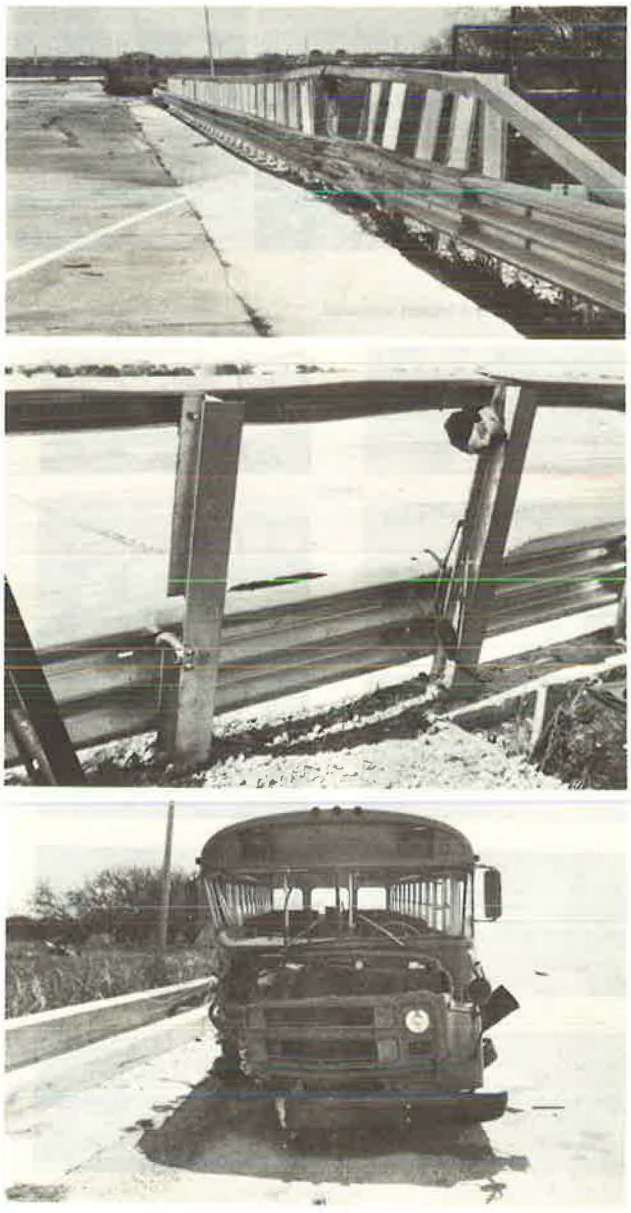

degrees. As shown in Figure 11, the vehicle was redirected smoothly. Damage to the barrier was negligible, and the vehicle sustained only moderate damage (see Figure 12).

Test TTR-7

Test TTR-7 was performed to evaluate the self-restoring retrofit for the structural adequacy test criteria of TRB Circular 191 (4). The 4,441-lb (2014-kg) vehicle impacted the barrier at 58.3 mph (93.9 km/h) and a 27.1-degree angle. The vehicle was redirected smoothly until the undeformed hood slid over the top of the lower beam and snagged on a post. A portion of the hood penetrated through the windshield before the hood was severed from the hinges.

Except that the hood snagged, the barrier performed in an acceptable manner. The maximum barrier deflection was not sufficient to encroach into the truss member zone.

Test TTR-8

Test TTR-8 was performed to evaluate the bridge approach for the 4,500-lb (2040-kg) car structural adequacy test. The more flexible characteristics of the approach barrier decreased the likelihood that the hood snagging problem would recur. However, as shown in Figure 13, the hood snagging occurred again as the vehicle was redirected after a 57.8-mph (93.1-km/h), 29.6-degree angle impact.

Test TTR-9

As a result of the hood snagging noted previously, 6-in. (0.2-m) spacers were installed between the posts and beams to minimize the likelihood of its occurrence (see Figure 14). A 25-degree angle impact is more likely to occur in a wider approach section than on a narrow bridge; therefore, the spacers were installed in the approach railing segment for this test.

The structural adequacy test of the approach railing system was repeated with this test. The 4,500-lb (2040-kg) vehicle impacted the barrier 26.6 ft (8.1 m) upstream of the bridge at 60.2 mph (96.9 km/h) at an angle of 25.9 degrees. As shown in Figure 15, the vehicle was redirected smoothly and no hood snagging was evident. The same vehicle, a 1978 Ford LTD, was used in tests TTR-7, TTR-8, and TTR-9 to ensure valid comparisons.

Test TTR-10

Test TTR-10 was performed to evaluate the bridge approach design with an 1,800-lb (800-kg) subcompact car at 60 mph (95 km/h) and 15 degrees. The 1,658-lb (752-kg) vehicle was redirected smoothly after striking the barrier at 61.3 mph (98.6 km/h) and a

Figure 11. Test TTR-6 sequential photographs.

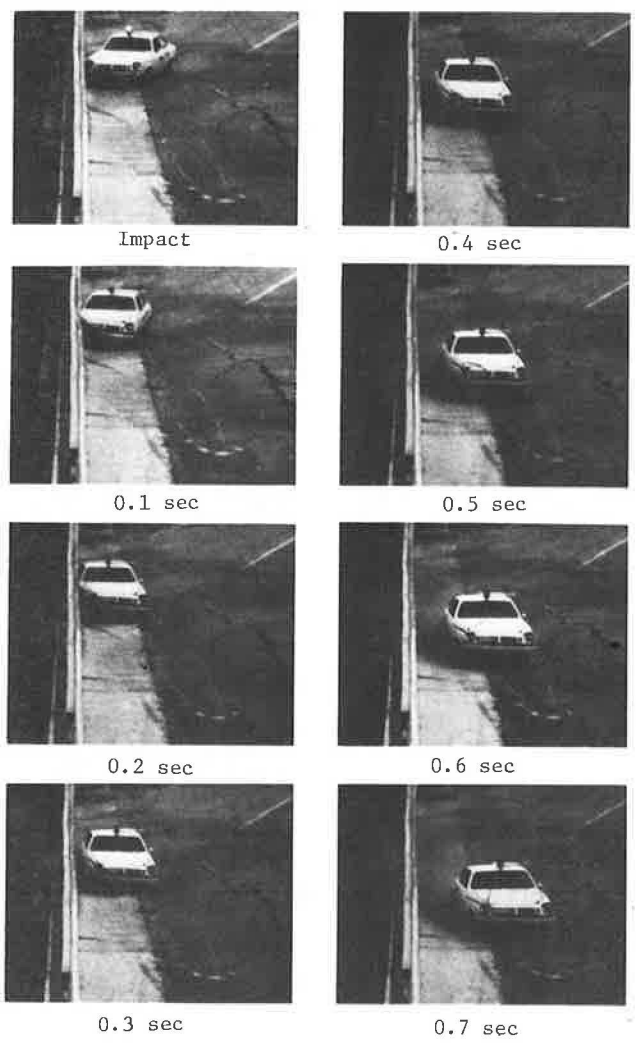

Figure 12. Photographs after test TTR-6.

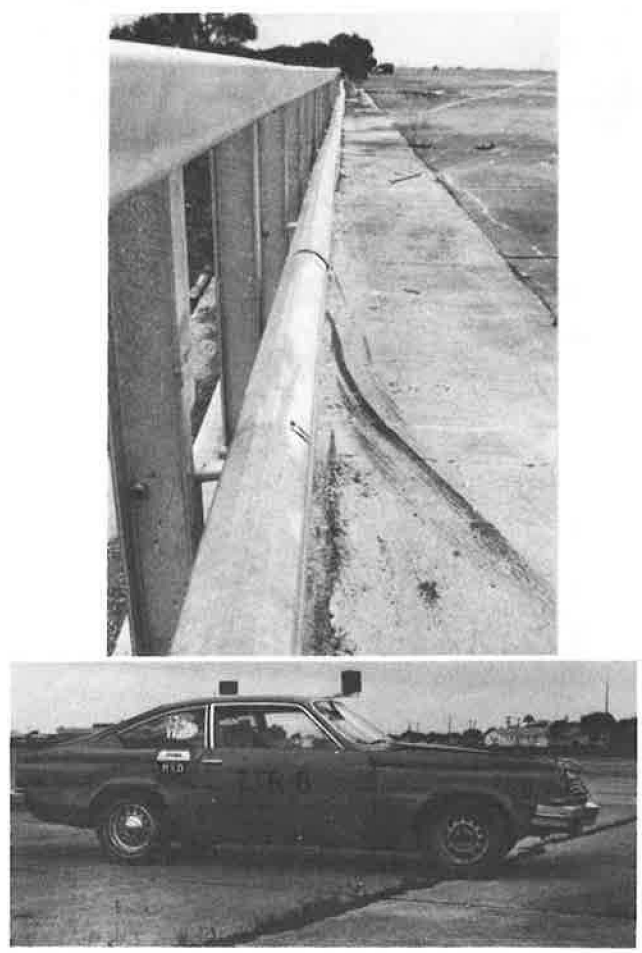

Figure 13. Test TTR-8 sequential photographs.

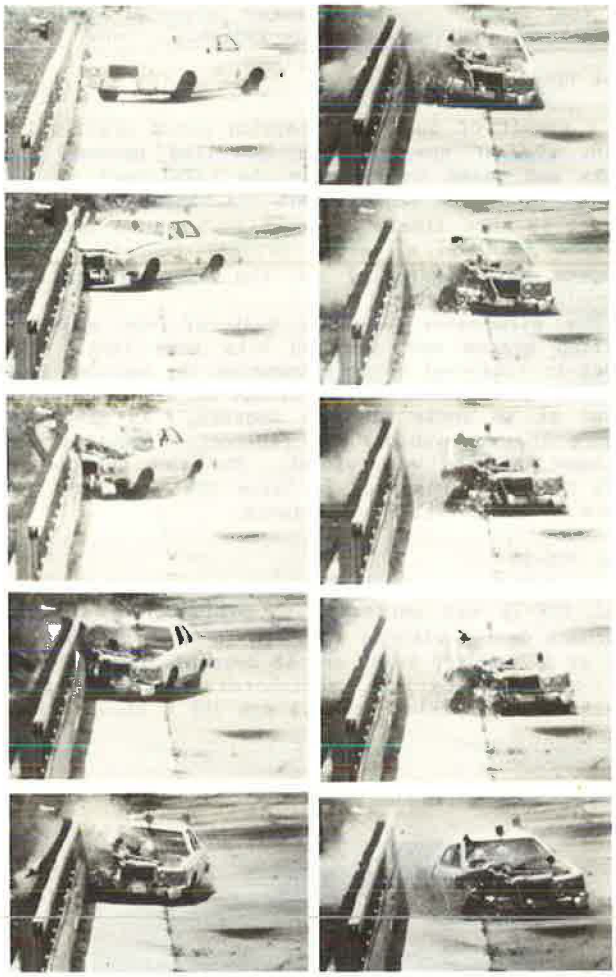

Figure 14. Modified approach guardrail test installation photographs.

Figure 15. Test TTR-9 impact sequence.

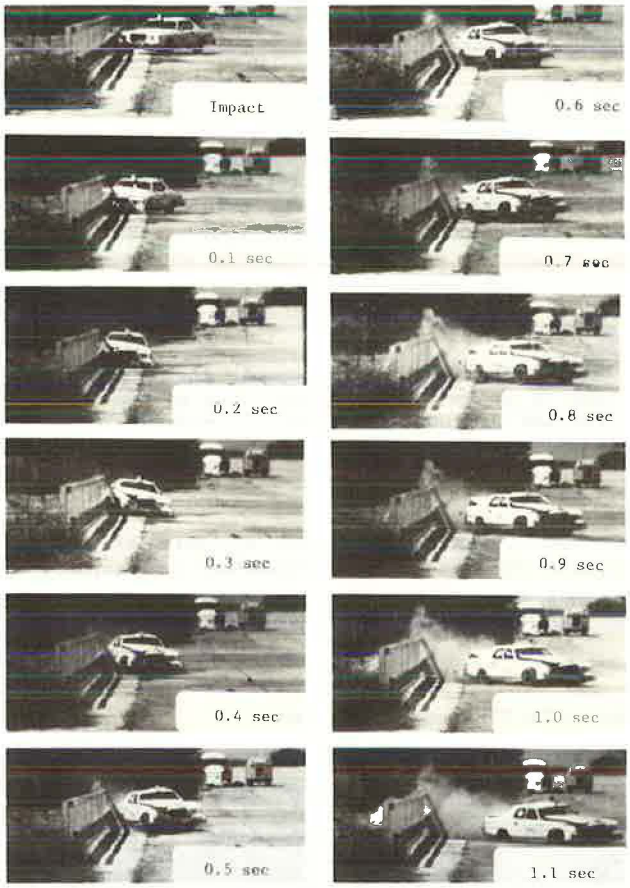

Figure 16. Test TTR-10 impact sequence.

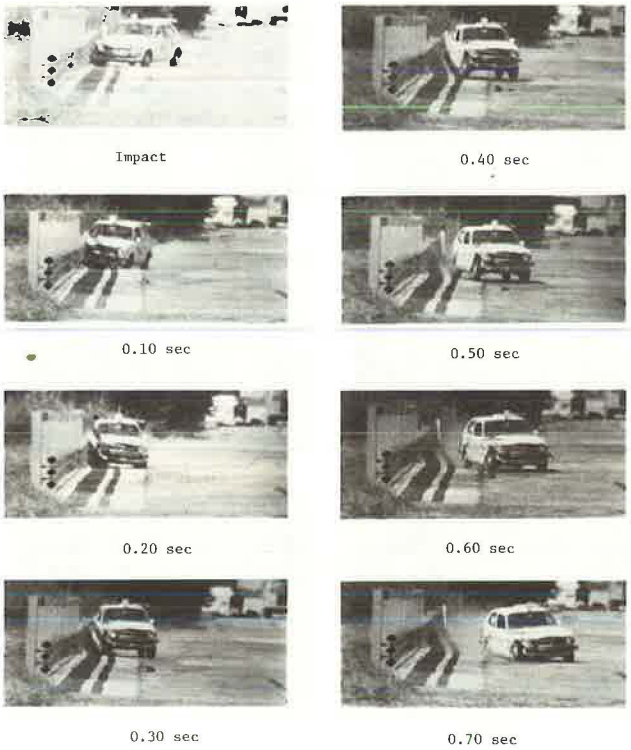

20.9-degree angle (see Figure 16). The self-restoring stage deflected a maximum of 3.5 in. (89 mm) before returning, undamaged, to the original position after the vehicle was redirected.

Low-Service Retrofit

Based on computer simulations, a design described in Figure 17 was selected for crash-test evaluation. As part of the installation a readily installed anchor bolt detail was employed. This consisted of drilling into the bridge deck and driving commercially available anchor studs into the holes.

Test TTR-13

The 4,466-lb (2026-kg) vehicle impacted the barrier at 59.3 mph (95.4 km/h) and a 19.1-degree angle. The vehicle was redirected smoothly and continued until contacting another barrier installation in-line with the test installation 150 ft (45 m) downstream of the impact (see Figure 18). The design goals of the barrier were met; that is, the maximum deflection beyond the rear post line was 3 in. (75 mm). This maximum deflection at one post was attributed to local buckling due to impact and the pulling of the anchor bolts from the slab for a distance of 0.5 in. (13 mm). A more substantial anchorage (e.g., bolts through the slab) would have prevented much of this deformation.

Two rail sections and three posts of the barrier were damaged. Vehicle and barrier damage are shown in Figure 19. The lower right-hand photograph shows partly pulled anchor studs of post 7.

Figure 17. Low-service retrofit.

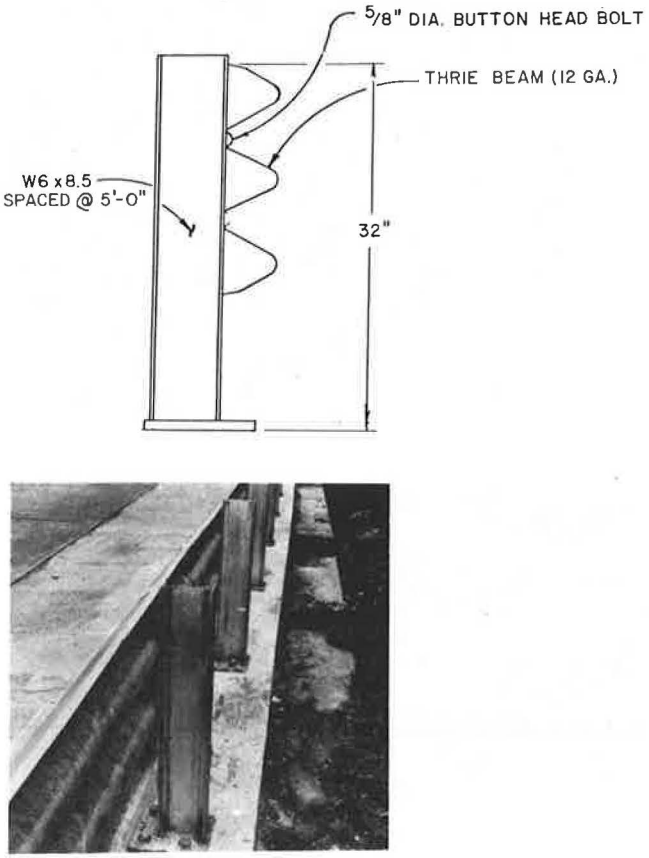

Figure 18. Test TTR-13 impact sequence.

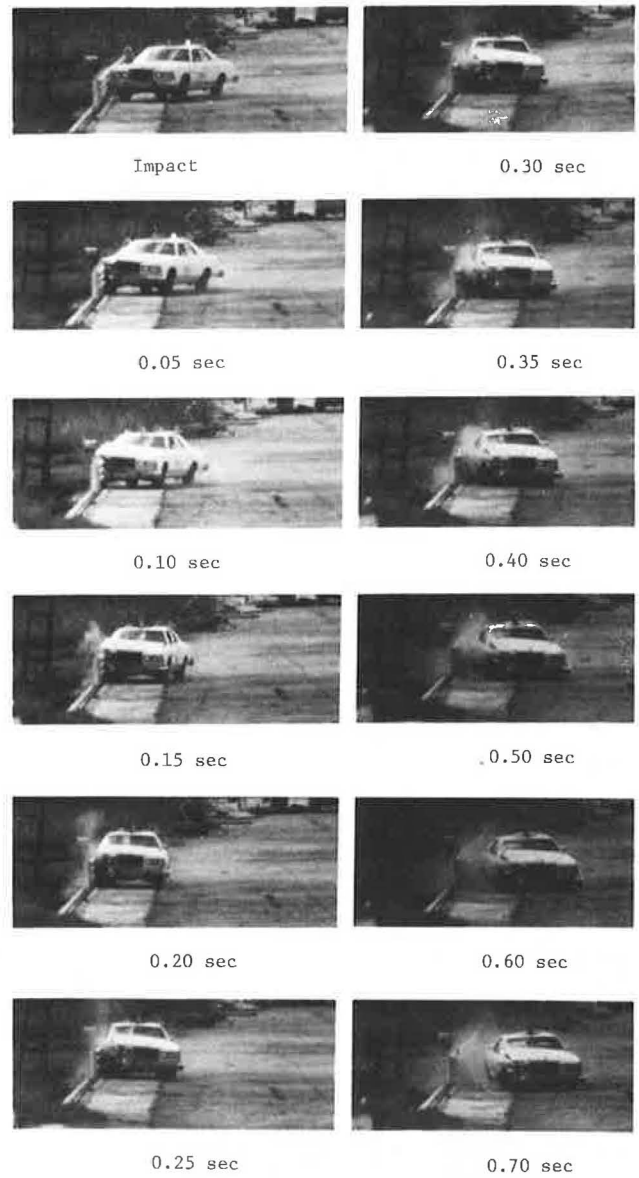

Figure 19. Photographs after test TTR-13.

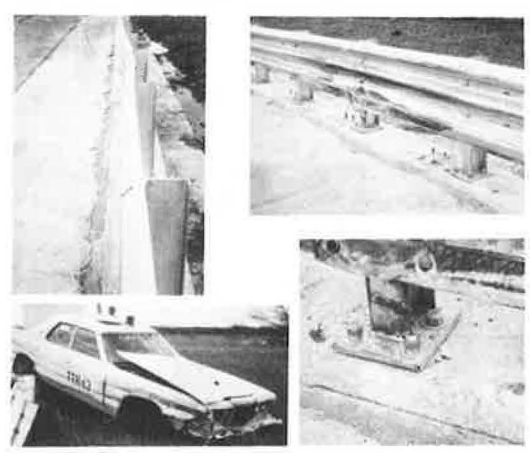

Test TTR-15

Test TTR-15 was conducted to evaluate the low-service retrofit for the occupant-risk impact conditions of NCHRP Report 230 (5). The 1,750-lb (794-kg) test vehicle impacted the installation at 57.9 mph (93.2 km/h) and an angle of 16.9 degrees (see Figure 20). Redirection of the vehicle was smooth and dynamic deflection was less than 1 in. (25 mm). No repairable damage was sustained by the system. Vehicle damage was moderate (see Figure 21).

DISCUSSION AND APPLICATION OF FINDINGS

A summary of all the tests conducted in the project is given in Table 2. The findings included the systematic design and development of two unique bridge rail retrofit systems for narrow through truss application.

Vehicle Factors

Crashworthiness of school bus suspension and steering assemblies is considered deficient for the severity of impacts in this project. The rigid railing criteria made the destruction of these assemblies during the 55 mph (90 km/h), 15-degree angle impacts unavoidable.

The particular 4,500-lb (2000-kg) sedan selected for crash test in this project had a unique hood design that made snagging of posts more probable than if another design had been used. The problem of hood snagging is discussed in more detail in the final project report (1).

Openings Between Rails

The opening between the upper and lower railings after the lower beam bottoms on the posts is 18-in. (0.5-m) wide. This opening permitted sheet metal portions of the bus and the hood of the 4,500-lb (2000-kg) car to snag on the exposed post flange edges. For wider bridges that will accommodate the 6-in. (150-mm) spacer block, the upper and lower beams should be blocked out accordingly. The higher impact-angle probabilities associated with the snagging problem increase with the width of the bridge; thus, narrower bridges that cannot accommodate the spacer do not have the need of the wider ones that can tolerate the additional 6-in. (150-mm) per side encroachment.

Figure 20. Test TTR-15 sequential photographs.

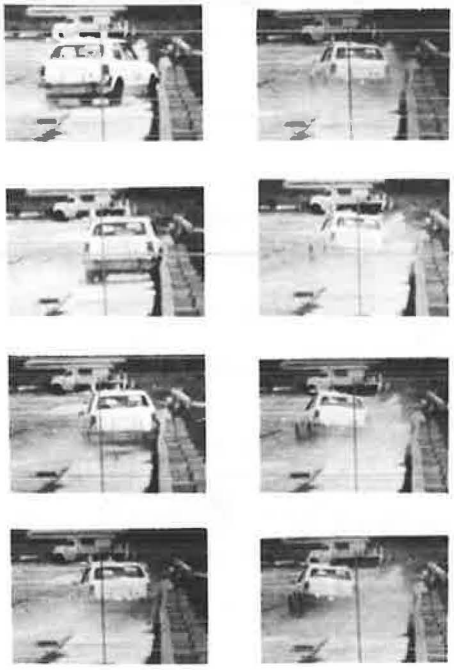

Application of Findings

Based on the findings of this project, both the high-performance retrofit and the lower-service system are recommended for immediate implementation. Estimated costs for the two systems are shown in Figure 22.

High-Performance Retrofit

The high-performance retrofit system is recommended for use where significant heavy vehicle traffic is present and at sites where impacts with heavy vehicles may occur. For bridges with accommodating width the installation of the blockout spacers between the railings and posts is recommended for reducing the potential for vehicle snagging. Design details for adapting example structures in developing the required post strength are given in the project final report (1).

Low-Service Retrofit

The low-service retrofit system is recommended for use on the following bridges:

Figure 21. Photographs after test TTR-15.

Table 2. Summary of vehicle crash tests.

Test No.	Barrier Description[a]	Vehicle	Vehicle Weight Including Ballast (lb)	Ballast Added (lb)	Impact Speed (mph)	Impact Angle (degree)	Vehicle Accelerations, 50-msec avg (g)				Maximum Roll Angle (degree)		Maximum Dynamic Deflection (in.)	Maximum Encroachment[b] (in.)	Remarks
							Film		Electronic		While in Rail Contact	Overall			
							Latitude	Longitude	Latitude	Longitude					
TTR-1	HP 1	1966 IH/Wayne, 72-passenger	20,000	6,200	55.2	13.7	3.0	-1.3	NM	NM	20.0	90.0	24.7	20.0	Extensive damage to vehicle front end - vehicle rolled on side after losing rail contact; concrete deck failure contributed to deflection
TTR-2	HP 2	1966 IH/Superior, 72-passenger	20,000	6,600	56.1	17.8	3.3	-3.0	4.0	-1.5	12.5	90.0	8.6	6.2	Extensive damage to front end—vehicle rolled on side after losing barrier contract
TTR-3	HP 3	1969 Chevy/Bluebird, 66-passenger	20,000	6,000	53.9	15.3	2.3	-1.9	3.5	1.3	10.7	10.7	7.8	6.0	Extensive vehicle damage, but design goals met with smooth redirection at shallow exit angle
TTR-4	HP 3	1976 Honda Civic	1,840	-[c]	59.8	14.8	7.8	-3.0	8.1	-2.1	NM	NM	3.0	0	Smooth redirection
TTR-5	HPAR	1969 Chevy/Bluebird, 66-passenger	20,000	6,000	59.6	15.9	1.7	-2.5	5.6	-3.8	15.0	15.0	27.8	5.0	Vehicle redirected with some sheet metal snagging at opening between rails
TTR-6	HP 3	1974 Chevy Vega	2,250	-[c]	58.8	15.4	6.1	-2.5	4.2	-4.1	NM	NM	5.1	0	Vehicle smoothly redirected
TTR-7	HP 3	1978 Ford LTD	4,441	-[c]	58.3	27.1	8.1	-5.1	10.4	-9.5	NM	NM	6.0	0	Vehicle redirected, but hood snagging on post between rail opening caused windshield penetration
TTR-8	HPAR	1978 Ford LTD	4,500	-[c]	57.8	29.6	6.2	-9.3	NM	NM	NM	NM	10.4	10.0	Vehicle hood snagged as in Test TTR-7
TTR-9	HPAR(B.O.)	1978 Ford LTD	4,500	-[c]	60.2	25.9	7.8	-4.8	9.0	-4.2	NM	NM	6.0	2.0	Blocked out rail effective in preventing hood snagging
TTR-10	HPAR(B.O.)	1975 Honda Civic	1,658	-[c]	61.3	20.9	9.4	-4.0	9.5	-3.4	NM	NM	3.5	0	Smooth redirection
TTR-11	LS 1	1975 Ford LTD	4,588	-[c]	61.7	18.4	6.0	-3.5	11.0	-3.5	NM	NM	9.0	5.5	Excessive deformation between posts and at one post
TTR-12	LS2	1978 Ford LTD	4,466	-[c]	49.0	15.0	NM	NM	NM	NM	NM	NM	NM	NM	Inadequate test speed
TTR-13	LS 2	1978 Ford LTD	4,466	-[c]	59.3	19.1	7.2	-4.1	6.6	4.1	NM	NM	3.6	3.0	Vehicle smoothly redirected; design goals met
TTR-14	LS 2	1979 Honda Civic	1,751	-[c]	60.9	19.9	8.7	-6.5	10.9	-5.6	NM	NM	1.0	0.5	Front wheel snagged on posts; otherwise redirected
TTR-15	LS 2	1976 Honda Civic	1,750	-[c]	57.9	16.9	8.3	-2.9	16.7	-2.7	NM	NM	1.0	0.5	Smooth redirection with no wheel snagging

Note: NM = not measured.

[a]Barrier code: HP 1 = high-performance retrofit prototype no. 1, HP 2 = high-performance retrofit prototype no. 1, HP 3 = self-restoring high-performance retrofit, HPAR = bridge approach rail, HPAR(B.O.) = approach rail-blocked out rails, LS 1 = low-service retrofit bridge railing, LS 2 = low-service retrofit bridge railing.

[b]Distance measured behind original bridge post line (rear flange).

[c]Test instrumentation only, some original equipment removed from vehicle.

Figure 22. Estimated costs for through truss retrofit railing.

High Performance Retrofit

Item	Est. Cost* ($/lin. ft.)
1. Post — $100 ea.	20.70
2. Upper railing and hardware	4.00
3. Tubular thrie beam and hardware	19.00
4. *Miscellaneous hardware	1.00
Total estimated cost	$44.70+

Low Service Retrofit

Item	Est. Cost* ($/lin. ft.)
1. Post — $25 ea.	5.00
2. Beam — 12 ga thrie & hardware	5.00
Total estimated cost	$10.00+

*Anderson Safeway Guard Rail Corp., Flint, MI
+ Does not include installation and post anchorage costs.

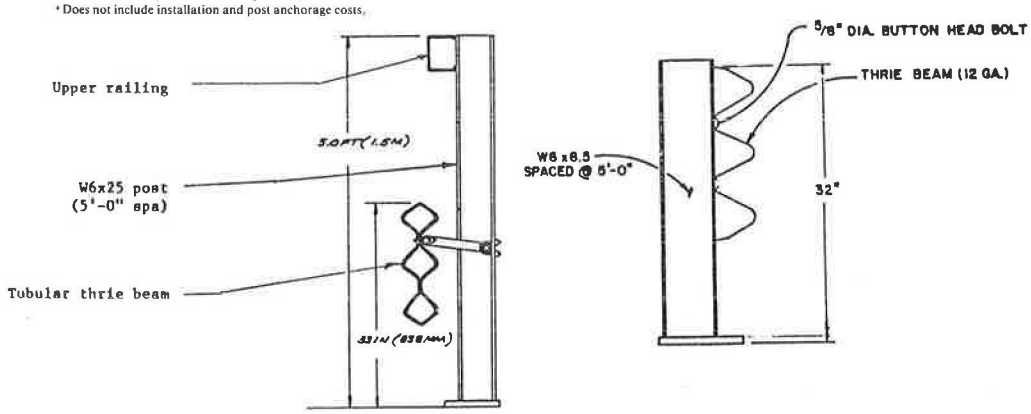

1. One-lane structures,
2. Narrow 20-ft (6-m) wide 2-lane structures,
3. Bridges that have automobile traffic only, and
4. Bridges that have posted speed limits of 35 mph (55 km/h) or less that carry truck and bus traffic.

REFERENCES

1. M.E. Bronstad, L.R. Calcote, and C.E. Kimball, Jr. Retrofit Railings for Narrow Through Truss and Other Obsolete Structures. Final Rpt., FHWA, March 1982.
2. C.E. Kimball et al. Development of a Collapsing Ring Bridge Railing System. FHWA, Rept. FHWA-RD-76-39, 1976.
3. M.E. Bronstad and J.D. Michie. Multiple-Service-Level Highway Bridge Railing Selection Procedures. NCHRP, Rept. 239, Nov. 1981, 155 pp.
4. Recommended Procedures for Vehicle Crash Testing of Highway Appurtenances. TRB, Transportation Research Circular 191, Feb. 1978.
5. J.D. Michie. Recommended Procedures for the Safety Performance Evaluation of Highway Appurtenances. NCHRP, Rept. 230, March 1981, 42 pp.

Publication of this paper sponsored by Committee on Safety Appurtenances.

Bridge Rail to Restrain and Redirect 80,000-lb Trucks

T.J. HIRSCH AND ALTHEA ARNOLD

A standard Texas traffic rail type C202 was modified to increase its height and strength to restrain and redirect an 80,000-lb (36,300-kg) van-type tractor-trailer under 50 mph (80.5 km/h), 15-degree angle impacts. The concrete parapet was increased to 36-in. (91-cm) high, and an elliptical steel rail was mounted on steel posts to increase the rail height to 54 in. (137 cm). One crash test was conducted on the bridge rail. The truck was restrained and redirected smoothly. This test has shown that a simple and economical rail can redirect heavy van-type trucks at speeds up to 50 mph (80.5 km/h) and 15-degree angle impacts. The cost of this rail is estimated at about $80 to $90/ft. Typical passenger car bridge rails in Texas now cost about $25 to $35/ft.

Current bridge rails are designed to restrain and redirect passenger cars. Hirsch (1) presented an analytical evaluation of Texas bridge rails to contain buses and trucks. In another report Hirsch (2) presented the results of crash tests on a modified Texas traffic rail type T202 that successfully redirected a 20,000-lb (9000-kg) school bus and a 32,000-lb (17 400-kg) intercity bus, both at nominally 60 mph (96 km/h) and 15-degree angles. With the increase in the number and size of large trucks the problem of truck-bridge rail collision is becoming more evident. The bridge rail tested here was selected and designed to restrain and redirect an 80,000-lb (36 287-kg) van-type tractor-trailer (3). The design was based on procedures and test data presented by Hirsch (1) and Buth (4).

The basic rail selected was a modification of the concrete parapet, Texas traffic rail type C202. The modified C202 rail consists of a concrete beam ele-

Figure 1. Cross section of modified C202 bridge rail.

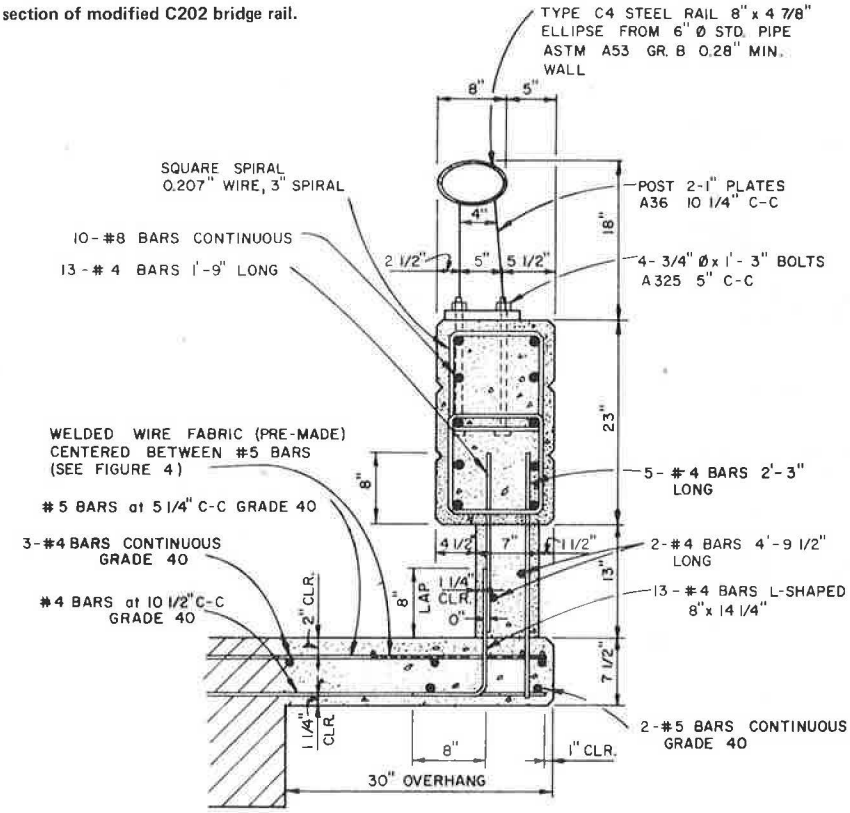

Figure 2. Elevation of modified C202 bridge rail.

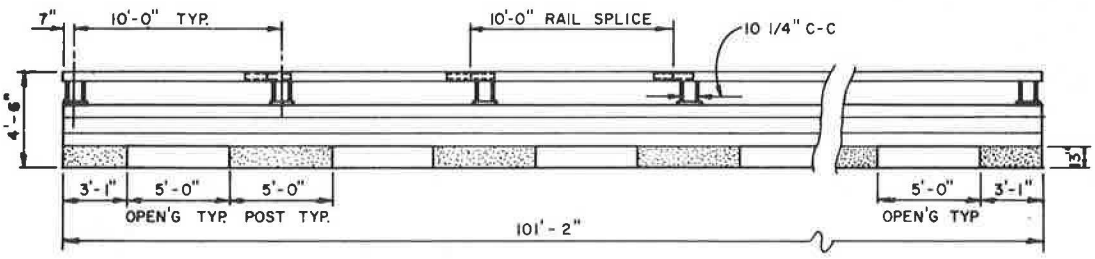

ment 13 in. (33 cm) wide and 23 in. (58 cm) deep, mounted 36 in. (91 cm) high on concrete posts located at 10-ft (3-m) center-to-center spacing. The concrete posts are 7 in. (18 cm) thick by 5 ft (1.5 m) long concrete walls with 5-ft (1.5-m) openings. The beam element contains considerable reinforcing steel and provides flexibility, thus cracking of the concrete when impacted by heavy vehicles is kept to a minimum. The modified C202 concrete parapet can be placed in long, continuous lengths that give good structural continuity and strength.

To increase the effective height of this bridge rail another standard Texas steel rail designated as C4 was mounted on top of the concrete rail. The bridge deck strength was also increased in an attempt to reduce cracking or damage when the bridge rail is struck by a heavy vehicle.

BRIDGE RAIL AND DECK MODIFICATIONS

The modified combination rail C202 concrete post-rail has a type-C4 steel rail mounted on top. This modified bridge rail makes a combination bridge rail 54 in. (137 cm) high suitable to retain 80,000-lb (36 287-kg) van-type trucks or tractor-trailers that impact (3) at 15 degrees and 50 mph (80.5 km/h). Drawings of this rail are shown in Figures 1 and 2. Figure 3 contains photographs that compare the size of this combination bridge rail with a Honda Civic, a Plymouth, and a van-type tractor-trailer.

The strength of the standard Texas 7.5-in. (19-cm) thick bridge deck was increased by the addition of welded wire fabric centered under each post and along the deck steel to within 1 in. (2.5 cm) of the edge of the slab. A drawing of the welded wire fabric is shown in Figure 4. The deformed wire has a minimum yield strength of 70 kips/in.^{2} (48.3 kN/cm^2), and the smooth wire has a minimum yield strength of 65 kips/in.^{2} (44.9 kN/cm^2).

The concrete post was 13 in. (33 cm) high x 7 in. (17.8 cm) thick x 60 in. (152 cm) long with a 60-in. (152-cm) open space between each post. Each concrete post was anchored to the bridge deck by means of 13 no. 4 bars (traffic side) and 5 no. 4 bars (field side). The 13 no. 4 bars contained an 8-in. (20-cm) lap splice on top of the bridge deck that was intended as a breakaway connection.

The concrete rail on top of the post was 13 in. (33 cm) thick x 23 in. (58 cm) high for the entire length of the rail. It contained two sections of

Figure 3. Comparison of Honda, Plymouth, and 80,000-lb truck with modified combination rail.

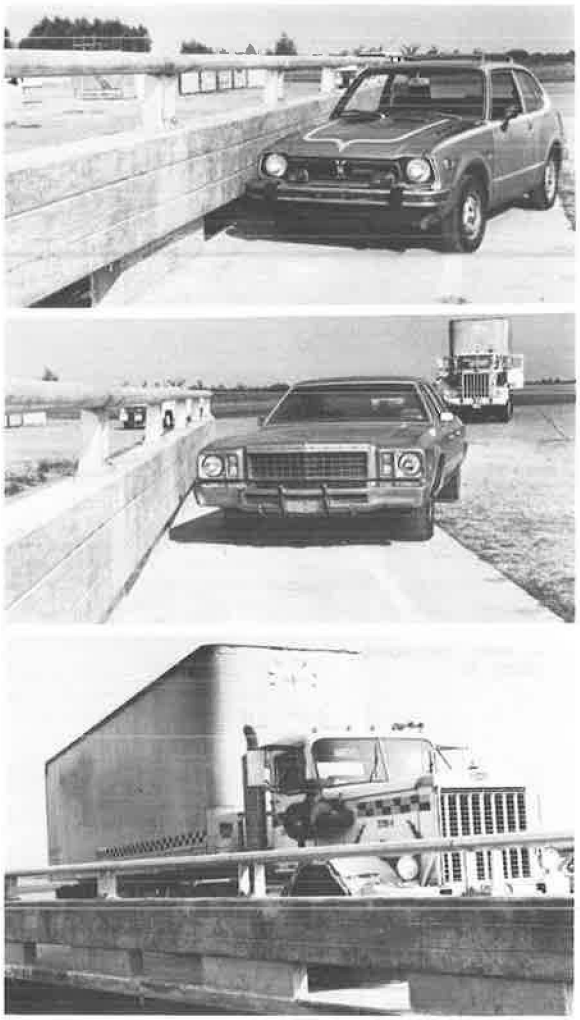

Figure 4. Detail of special slab reinforcement used under each concrete post.

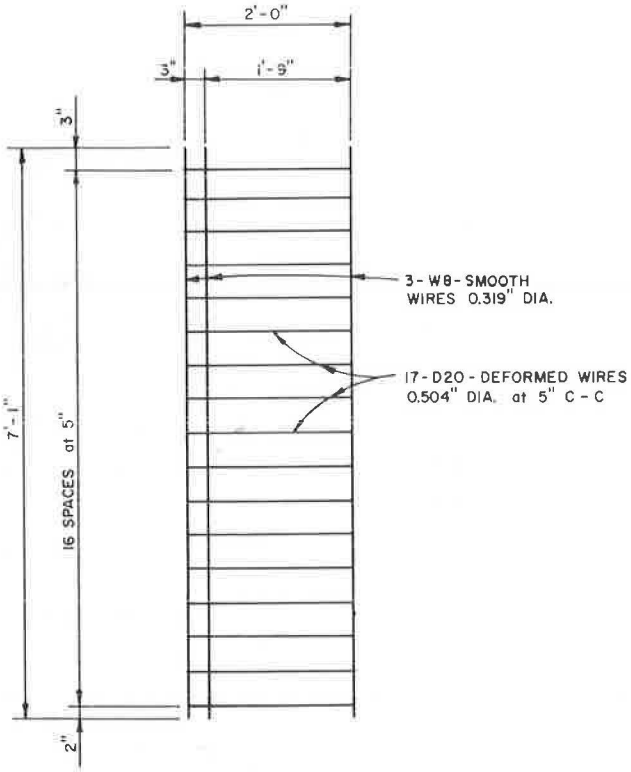

square spiral, as shown, with 10 no. 8 bars along the length of the rail. The twin spirals were used instead of a single spiral because the square spiral was available from a producer of Texas standard prestressed square piling that requires this type of spiral.

The steel rail on top of the modified C202 concrete rail was the Texas standard type-C4 steel rail. It was made from 6-in. (15-cm) diameter standard steel pipe (ASTM A53 Grade B) shaped into an 8- x 4-7/8-in. (20- x 12.4-cm) ellipse and welded to a post and base plate made of 1-in. (2.54-cm) steel plates. This post was anchored to the concrete rail by means of four 3/4 in. diameter x 15 in. (38 cm) long A325 bolts. A high-cast steel conical washer was installed under each bolt nut. These washers were evidently the standard being supplied by the fabricator for this type of Texas bridge rail. The standard drawing indicates that only washers are to be supplied.

All steel bars in the concrete post and rail were grade 60, including the bent bars that anchor the post to the deck. The deck steel bars were grade 40. The concrete for the deck, post, and rail was such that its strength was 3,000 psi (2.068 kN/cm^2) at the time of the test.

TRUCK CRASH TEST

This bridge rail system was designed to contain and redirect an 80,000-lb (36 287 kg) van-type tractor-trailer. A simulated bridge deck with this rail system was built at the Texas Transportation Institute Proving Grounds and tested with a 1978 auto car tractor-trailer ballasted with sand bags to 79,770 lb (36 184 kg). Drawings showing the dimensions of this vehicle along with loaded and unloaded weights on each axle or pair of axles are shown in Figures 5 and 6. Before and after test photographs of the truck are presented in Figures 7 and 8.

The truck impacted the rail at 49.1 mph (79.0 km/h) and 15-degree angle. Impact occurred between posts 3 and 4, and the truck was redirected smoothly. Figure 9 shows the bridge rail and test site immediately after test 6. The truck entry and exit path can be seen clearly. The truck sustained damage to the right front and right tandem wheels. The trailer body bulged out slightly on the right side from the shift in load (sand bags). The trailer body was in contact with the upper railing over a length of approximately 40 ft (12 m) (Figure 8). This point of contact was centered about 4 in. (10 cm) above the trailer floor, which is at 54 in. (137 cm) as shown in Figure 5. A summary of the crash test data is given in the list below.

1. Test number--6;
2. Vehicle--van-type tractor-trailer;
3. Mass--79,700 lb (36 184 kg);
4. Speed--49.1 mph (79.0 km/h);
5. Film angle--15 degrees;
6. Angle of impact departure--6.3 degrees truck, 2.5 degrees trailer;
7. Angle of roll (max)--6.0 degrees truck, 16.5 degrees trailer;

Figure 5. Tractor-trailer loaded dimensions, empty weights, and loaded weights.

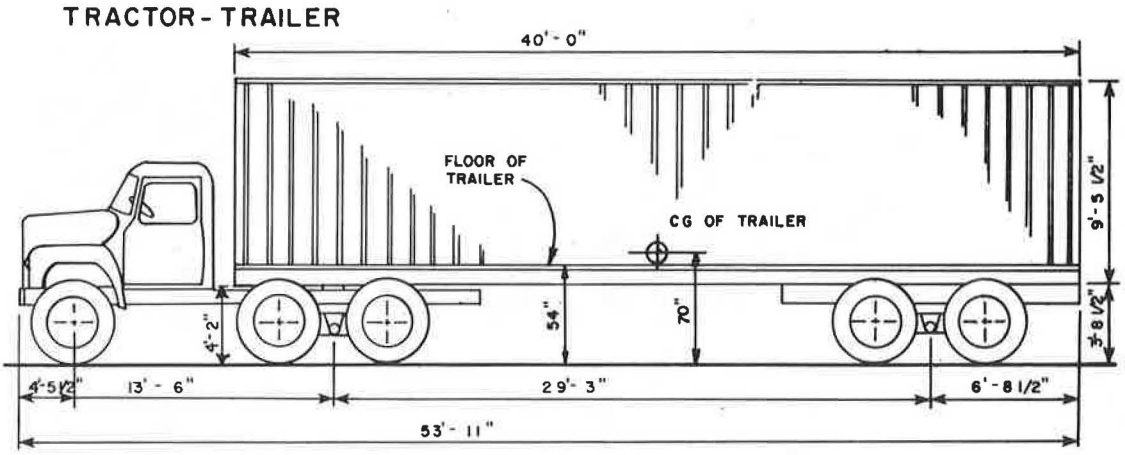

EMPTY WEIGHTS:		LOADED WEIGHTS:	
Weight on front axle	10,720 lbs	Weight on front axle	11,490 lbs
Weight on center axles	13,070	Weight on center axles	33,760
Weight on rear axles	8,880	Weight on rear axles	34,520
Total Empty Weight	32,670 lbs	Total Loaded Weight	79,770 lbs

Figure 6. Empty tractor dimensions and weights.

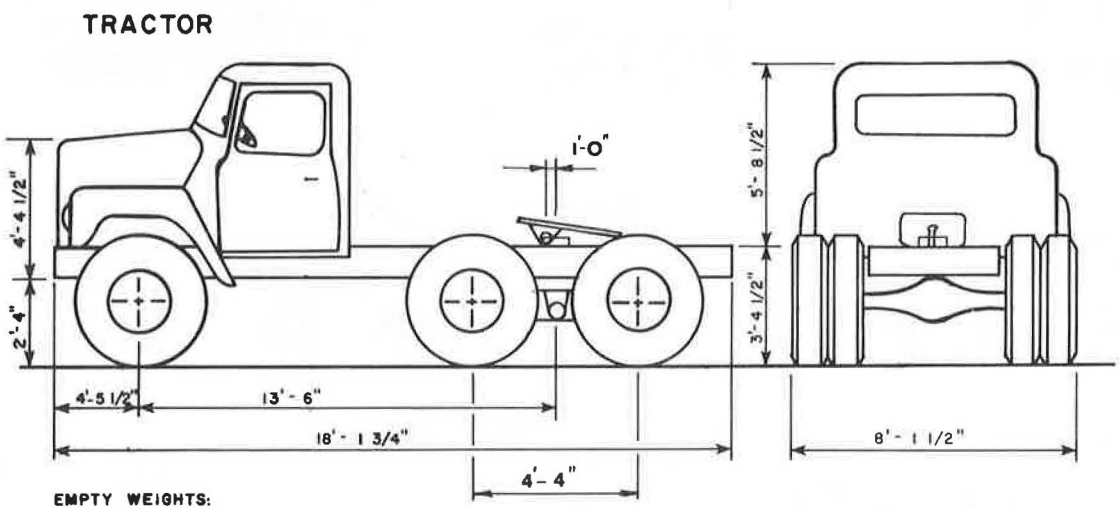

EMPTY WEIGHTS:	
Weight on front axle	10,320 lbs
Weight on rear axles	8,070
Total Empty Weights	18,390 lbs

8. Time to parallel--0.6 sec;
9. Barrier displacement--1.5 in. (3.8 cm) concrete rail, 12 in. (30.5 cm) steel rail;
10. Distance to parallel--35.6 ft (11.3 m) longitudinal, 2.05 ft (0.65 m) lateral;
11. Accelerometer data (located over the tractor tandem axles)--100 Hz low-pass maximum filter;
12. Maximum average 0.050 sec acceleration--1.68 g longitudinal, 5.94 g lateral, 6.28 g resultant; and
13. Peak acceleration--21.55 g longitudinal, 19.03 g lateral, 31.03 g resultant.

The bridge deck supporting posts 1 through 8 was cracked and damaged; the major portion of the damage centered around post 4. Test results on another ongoing research study have indicated the welded wire fabric shown by Figure 4 did not increase the deck or slab strength significantly. Sequential photographs showing the overhead and frontal view of the crash test are shown in Figure 10.

The truck was equipped with roll, pitch, and yaw rate gyros and x, y, and z accelerometers located above the tractor tandem wheels. Graphs of the filtered data from this instrumentation are presented in Figures 11-13.

Other data were gathered on the truck during the test. Maximum roll of the tractor tandem axles was 6 degrees from the roll rate gyros and of the

Figure 7. 80,000-lb truck before test.

Figure 8. 80,000-lb truck after test.

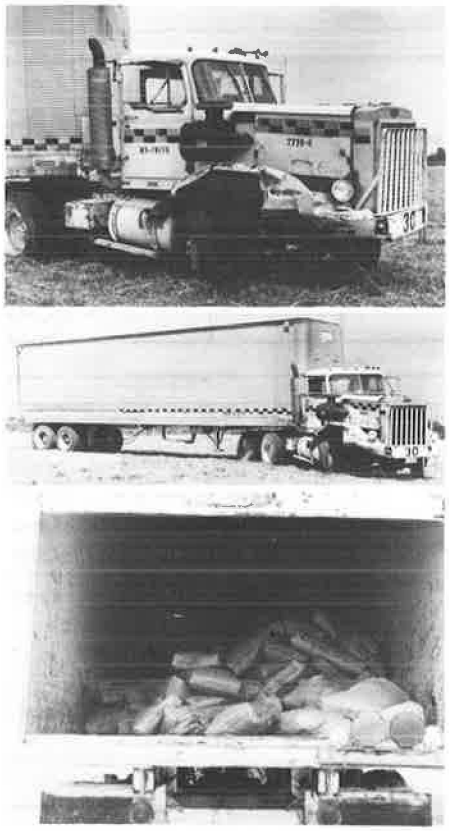

Figure 9. Bridge rail and truck after test.

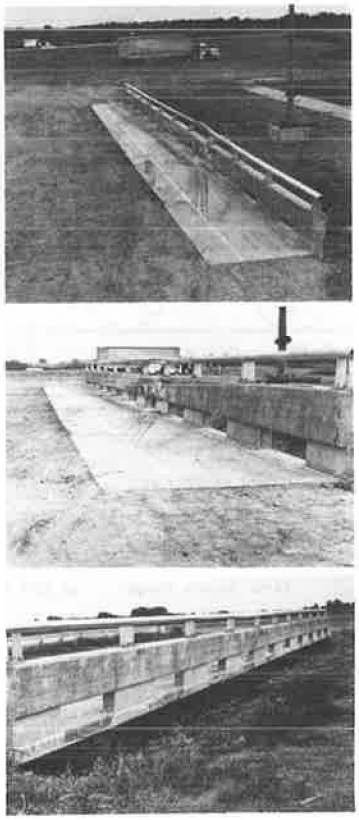

Figure 10. Sequential photographs of test.

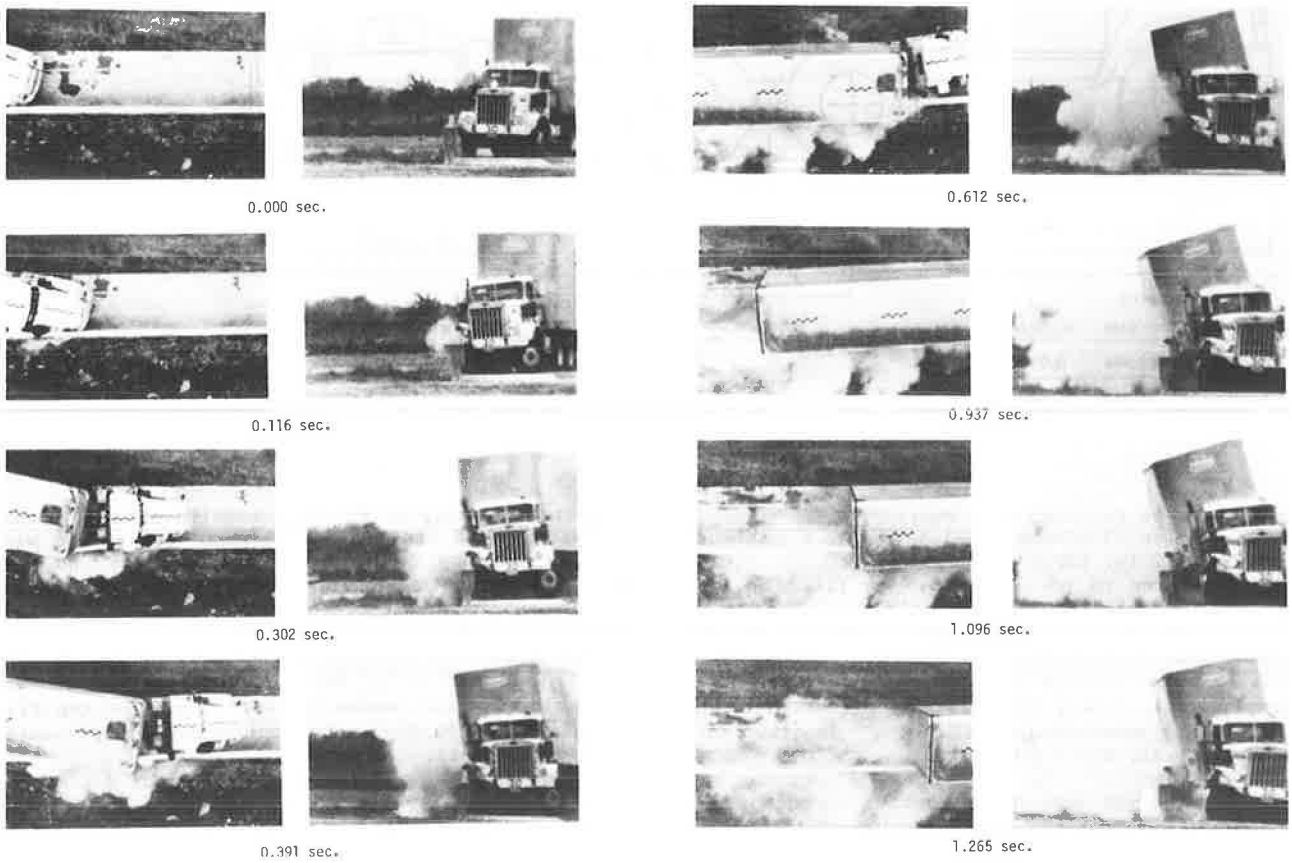

Figure 11. Vehicle longitudinal acceleration.

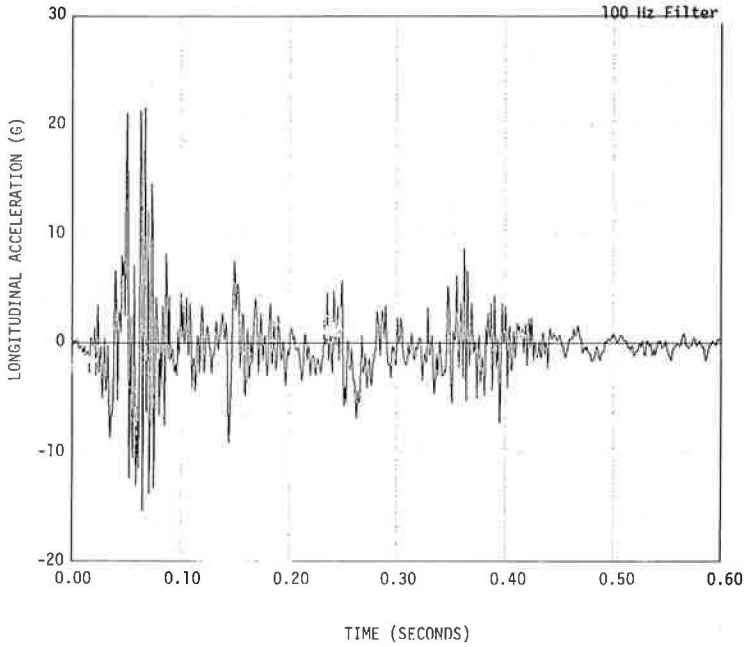

Figure 12. Vehicle transverse acceleration.

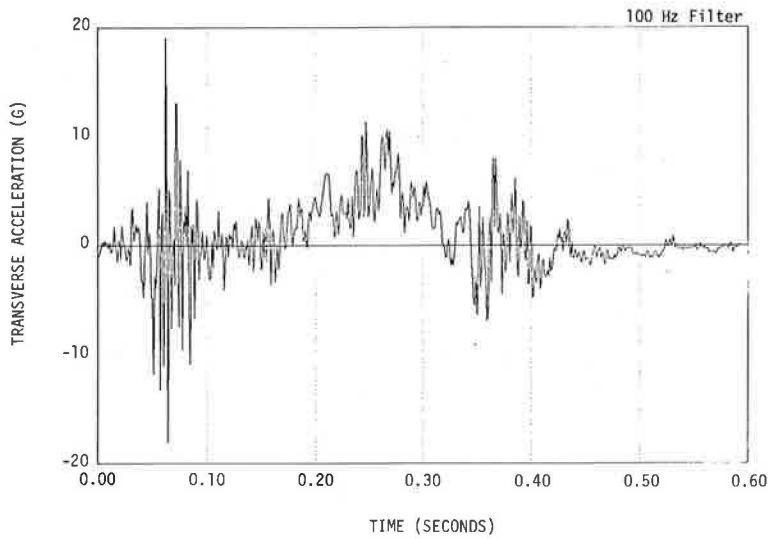

Figure 13. Roll versus time.

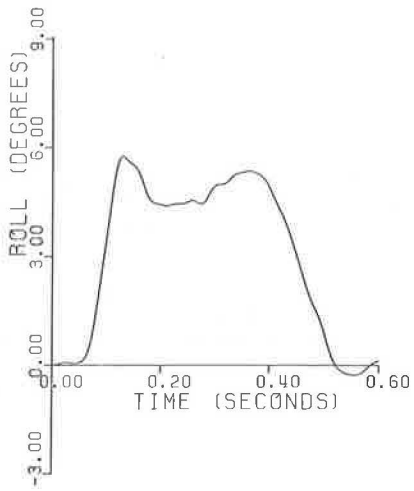

trailer 16.5 degrees from the high-speed film. From the accelerometers, the longitudinal, lateral, and resultant maximum average 0.050-sec accelerations were -1.68, 5.94, and 6.28, respectively.

DISCUSSION OF RESULTS

NCHRP Report 230 (3) recommends the following criteria for test S20 (80,000 lb/50 mph/15 degrees):

1. Test article shall smoothly redirect the vehicle; the vehicle shall not penetrate or go over the installation.
2. Detached elements, fragments, or other debris from the test article shall not penetrate or show potential for penetrating the passenger compartment or present undue hazard to other traffic.

According to these criteria the test was a success. The bridge rail contained and redirected the truck smoothly. The bridge rail also remained intact.

Impact severity as defined by the occupant flail space approach was also computed from the accelerometer data. The recommended threshold values for the flail space evaluation are 40 ft/sec and 30 ft/sec for the longitudinal and lateral occupant impact velocity, and 20 g for the highest 10 msec average after contact. The computed values for this test were well below the recommended values. The longitudinal impact velocity was 7.6 ft/sec, and the highest 10 msec average acceleration after impact was 1.2 g. The lateral impact velocity was 18.3 ft/sec, and the highest 10 msec average acceleration was 3.3 g.

The design intent of the upper C4 rail centered at 51.5 in. (131 cm) was to allow the relatively hard trailer floor to strike this rail and thus provide a resistance to overturning by the trailer. The trailer actually struck this rail about 6 in. (15 cm) above the centroid of the floor system and thus was in the relatively soft sheet metal portion of the trailer body. Some of the 16.5-degree roll angle of the trailer was thus due to this softer impact and some was due to the early fracture of the cast steel washers on the anchor bolts.

SUMMARY AND CONCLUSIONS

A standard Texas traffic rail type C202 was modified by increasing its height and strengthened so that it could restrain and redirect an 80,000-lb van-type truck or tractor-trailer. The modified C202 rail consisted of a concrete beam element 13 in. (33 cm) wide and 23 in. (58 cm) deep, mounted 36 in. (91 cm) high on concrete posts located at 10-ft (3.0-m) center-to-center spacing. The concrete posts were 7 in. (18 cm) thick by 5 ft (1.5 m) long concrete walls with 5-ft (1.5-m) openings between each post. To increase the effective height of the bridge rail, a standard type C4 steel rail was mounted on top of the concrete rail.

The crash test was conducted on this bridge rail with a 79,770-lb (36 184-kg) van-type tractor-trailer impacting the rail at 49.1 mph (79.0 km/h) and 15 degrees. The vehicle was smoothly redirected. Damage to the truck and rail was moderate.

One significant conclusion that can be deduced from this test is that the upper rail centered at 51.5 in. (131 cm) probably would have performed better had it been lower and if the post anchorage cast steel washers had not shattered prematurely. The trailer roll angle (16.5 degrees) probably would have been smaller. Part of the trailer roll angle was due to the rail contacting the soft body sheet metal. Had the upper rail posts been stiffer and if the rail had contacted the trailer floor as was the design intent, the trailer roll angle would have been reduced. Thus, some believe that a better location for the upper rail would have been at a height of about 51 in. (130 cm) rather than the 54-in. (137-cm) height used.

This test has shown that a bridge rail can be built on standard concrete decks to contain large van-type trucks and redirect them without rollover.

The cost of this heavy truck bridge rail is estimated at about $80 to $90/linear ft. The cost of typical metal or concrete bridge rails now in use in Texas is about $25 to $35/linear ft.

ACKNOWLEDGMENT

This research study was conducted under a cooperative program between the Texas Transportation Institute (TTI), the Texas State Department of Highways and Public Transportation (TSDHPT), and the Federal Highway Administration (FHWA). Robert L. Reed (Engineer of Bridge Design, TSDHPT) and John J. Panak (Supervising Design Engineer, TSDHPT) were closely involved in all phases of this study.

REFERENCES

1. T.J. Hirsch. Analytical Evaluation of Texas Bridge Rails to Contain Buses and Trucks. Texas Transportation Institute, Texas A&M Univ., College Station, Res. Rept. 230-2, Aug. 1978.
2. T.J. Hirsch. Bridge Rail to Restrain and Redirect Buses. Texas Transportation Institute, Texas A&M Univ., Res. Rept. 230-3, Feb. 1981.
3. J.D. Michie. Recommended Procedures for the Safety Performance Evaluation of Highway Appurtenances. NCHRP Rept. 230, Transportation Research Board, National Research Council, Washington, D.C., Mar. 1981.
4. C.E. Buth. Development of Safer Bridge Rails. Texas Transportation Institute, Texas A&M Univ., College Station, Oct. 1978.

Publication of this paper sponsored by Committee on Safety Appurtenances.

Crash Cushion for Narrow Objects

DEAN L. SICKING AND HAYES E. ROSS, JR.

A crash cushion designed for narrow objects such as the end of the concrete safety shaped barrier is described. Features of the cushion are as follows: (a) it meets current safety performance standards, (b) it is constructed of readily available materials (steel barrels, thrie beams, steel channels, and steel cables), and (c) it is relatively inexpensive to install and maintain. Also presented in the paper are results of four full-scale vehicle crash tests conducted in accordance with recommended procedures in Transportation Research Circular 191. The crash cushion met the performance standards of the circular and NCHRP Report 230.

The concrete safety shape barrier (CSSB) has gained widespread use in recent years and has been both a cost-effective and crashworthy system. When the barrier must be terminated within the clear zone, however, the exposed end poses a serious hazard to the motorist. Four acceptable end treatments are now available:

1. Flare the barrier end out of the clear zone (at an acceptable flare angle) or bury the end in a cut slope (this option is available for roadside barrier application only);
2. Use the guardrail energy absorbing terminal (GREAT), which is a proprietary system;
3. Use the median barrier breakaway cable terminal; and
4. Use an approved crash cushion.

In many cases the barrier end cannot be flared out of the clear zone or buried because of roadway geometrics or other constraints. Although the GREAT system is a crashworthy crash cushion, its use has been limited by its relatively high cost. Similarly, alternative 3 has not been widely used because of its relatively high cost and marginal impact performance for the small car. Approved crash cushions are also costly and require more space than is often available.

A portable crash cushion for the CSSB that is both inexpensive and suitable for narrow medians was developed recently at the Texas Transportation Institute (TTI) (1). This crash cushion was developed for use in construction zones and is made of empty and sand-filled steel drums that have W-beam guardrails attached to the drums. Although this cushion is not suitable for permanent installations, it has proven the merit of a crash cushion constructed from empty and sand-filled steel drums.

The objective of this research was to use the TTI crash cushion in the development of a crash cushion for the CSSB that would (a) meet nationally recognized impact performance standards for a permanent crash cushion, (b) be suitable for use in narrow medians and on the roadside, (c) be reasonably inexpensive to install and maintain, and (d) be constructed of materials readily available to highway maintenance personnel.

The findings of a research study conducted in 1981 (2) are described briefly in this paper; refer to the report for more information.

CRASH CUSHION DESIGN

An impact attenuator for narrow objects must perform as a crash cushion if hit head-on and as a longitudinal barrier if hit downstream from the nose. The design of a system to satisfy both requirements presents special problems. The first function was achieved by the combined effect of a steel drum, energy-absorbing crash cushion, and a sand barrel, inertial cushion. This was accomplished with a single row of 55-gal loose-head steel drums, some of which were empty, some partly filled, and others completely filled with sand. Two 5/8-in. steel cables placed on each side of the row of barrels assist in redirecting a vehicle that impacts from the side. Thrie-beam fish scales distribute side impact forces between the drums and prevent vehicles that impact the side of the cushion from snagging on the steel drums (3).

Details of the crash cushion are shown in Figures 1 and 2. Each drum is mounted on two C4 x 5.4 steel channels. The channels prevent snagging of the drums on the ground during head-on and side impacts. If the drums do not slide freely excessive stopping forces could be transmitted to a vehicle that impacts head-on or the drums could overturn during side impacts and cause wheel snagging to become a problem. Further, the channels and false bottoms, placed in drums that contain less than 500 lb (227 kg) of sand, raise the center of gravity of the system, which reduces the possiblity that the vehicle will push the top part of the cushion down, ride over the top of the cushion, and become a projectile.

Other desirable features of the crash cushion are its size and construction. This crash cushion is only slightly wider than the CSSB and can therefore be placed in narrow medians as well as on the roadside. It is constructed of readily available materials, many of which are already used by highway maintenance personnel. All components of the attenuator can be shop-fabricated and assembled in the field. Repair of the device is facilitated by the ease with which a drum can be replaced. The sand is placed in bags and can be lifted easily out of a damaged drum. Individual drums can be replaced without taking the other drums out of the device. For most impacts all thrie-beam fish scales and steel channels can be salvaged from damaged drums and thereby reduce material costs. Therefore, the crash cushion should be inexpensive to install and maintain.

ANALYSIS

The crash cushion is designed to provide a yielding structure for vehicles that impact the nose of the device. A vehicle that impacts the cushion head-on is decelerated smoothly by crushing the empty and partly filled drums and accelerating the sand-filled drums from rest. Head-on impact with the crash cushion can be analyzed by applying the laws of conservation of energy and momentum.

When a vehicle impacts and crushes an empty drum the kinetic energy of the vehicle is reduced by the energy required to crush the drum. The energy required to dynamically crush an 18-gauge steel drum a distance of 18 in. (45.7 cm) was found by Hirsch and Ivey (1) to be 27 kips-ft (36.6 kN•m). By applying the law of conservation of kinetic energy, the velocity change of the vehicle and the average acceleration during the event can be estimated:

$$KE_i - KE_d = KE_f \quad (1)$$

$$0.5m\,V_i^2 - KE_d = 0.5m\,V_f^2 \quad (2)$$

$$V_F = \sqrt{(mV_i^2 - 2KE_d)/m} \quad (3)$$

$$a_{avg} = (V_i^2 - V_F^2)/2d \quad (4)$$

where

KE_i = kinetic energy of vehicle before crushing a drum,
KE_f = kinetic energy of vehicle after crushing a drum,
KE_d = energy required to crush a drum,
V_i = vehicle velocity before impact,
V_f = vehicle velocity after impact,
m = mass of vehicle,
a_{avg} = average acceleration of vehicle during event, and
d = distance drum is crushed.

When a sand-filled drum is impacted by a vehicle the drum is crushed approximately 6 in. and accelerated to the velocity of the vehicle. The change in vehicle velocity can be estimated by applying the laws of conservation of energy and momentum. The law of conservation of energy can be applied as shown previously to determine the velocity change when the barrel is partly crushed. The law of conservation of momentum can be applied when a sand-filled drum is accelerated from rest, as shown in Equations 5 and 6.

$$m_i V_j = (m_i + m_d)\,V_F \quad (5)$$

$$V_F = m_i V_j/(m_i + m_d) \quad (6)$$

where

V_j = velocity of vehicle after partly crushing a drum,
V_F = velocity of vehicle after impact,
m_i = mass of vehicle and previously impacted drums, and
m_d = mass of sand-filled drum.

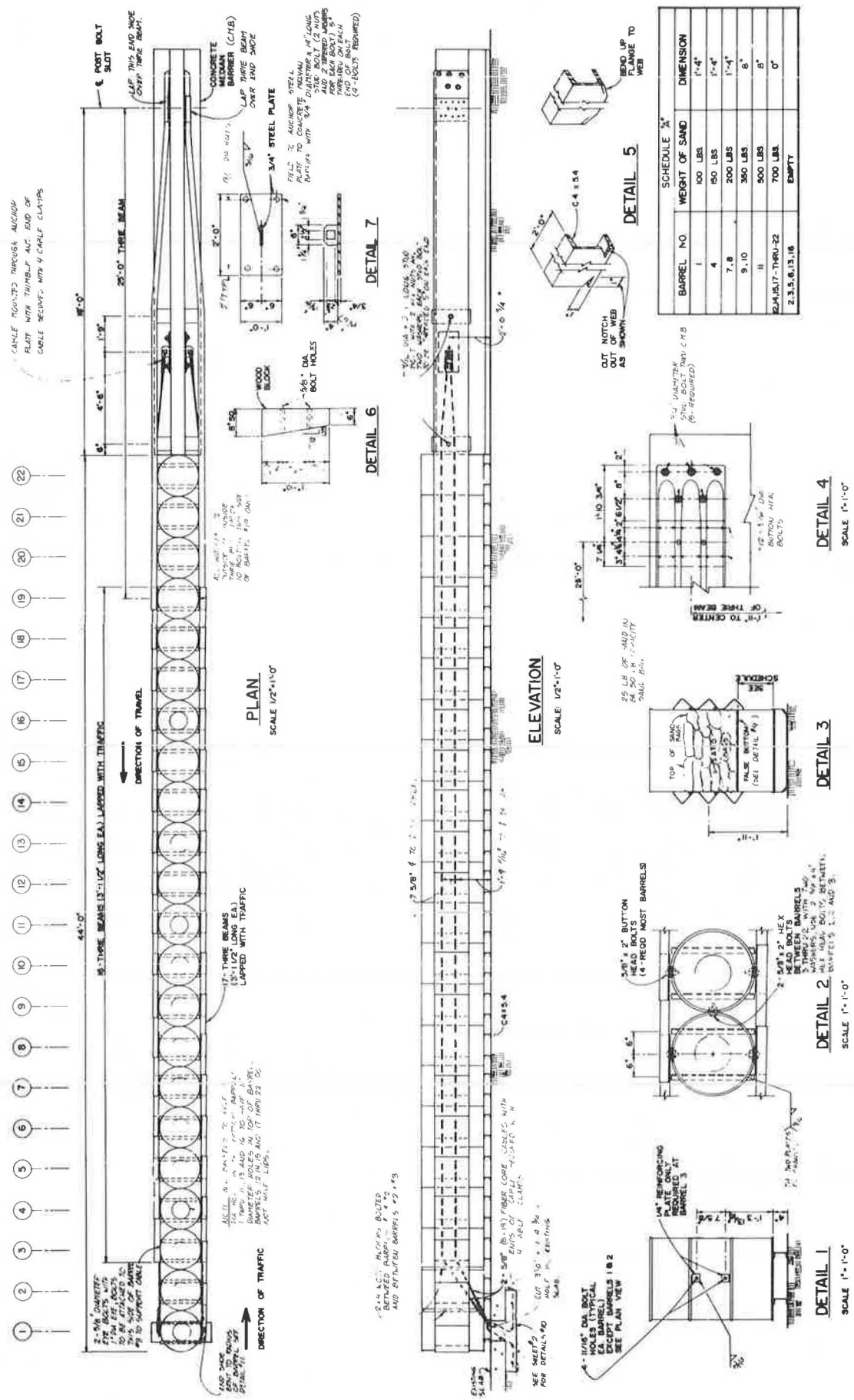

Figure 1. Construction drawings for narrow hazard crash cushion.

Figure 2. Construction details for narrow hazard crash cushion.

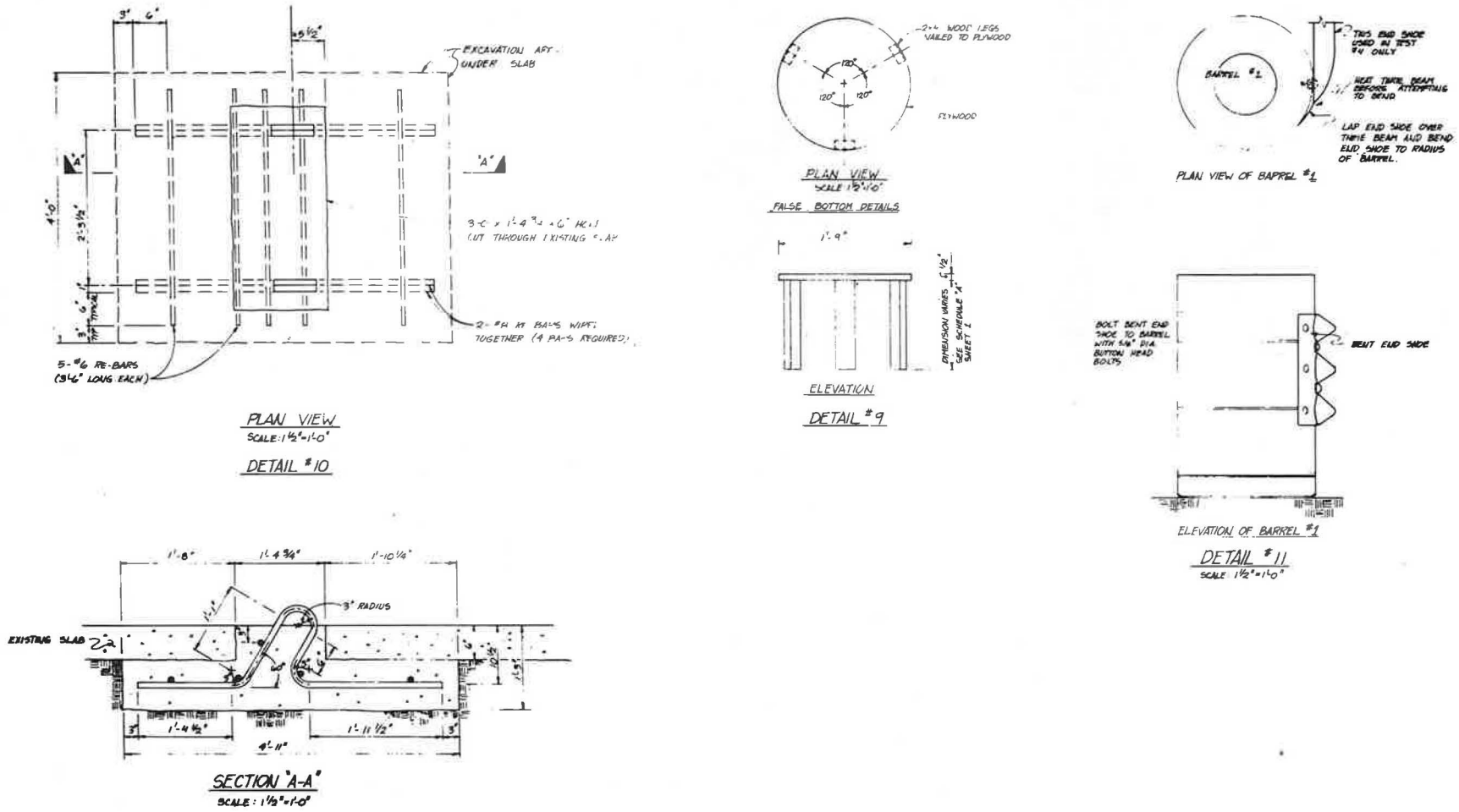

The occupant movement relative to the vehicle during an impact event can be estimated from the average acceleration, initial and final velocities, and travel distance of the vehicle.

$$V_f = a_{avg}t + V_i \quad (7)$$

$$t = (V_F - V_i)/a_{avg} \quad (8)$$

$$S_v = V_i t - 0.5\, a_{avg}\, t^2 \quad (9)$$

$$S_o = V_o t \quad (10)$$

$$S_r = S_o - S_v \quad (11)$$

where

a_{avg} = average vehicle acceleration during event,
t = duration of event,
S_v = distance traveled by vehicle,
S_o = movement of occupant,
V_o = velocity of occupant (vehicle velocity on initial impact), and
S_r = movement of occupant relative to vehicle.

When the sum of S_r for each impact event reaches 2 ft (0.61 m), the estimated occupant impact velocity is the difference between the initial velocity of the vehicle and the current velocity of the vehicle. The average acceleration over the stopping distance can also be estimated from the previous analysis.

Predicted and test results for longitudinal occupant impact velocities and average accelerations over the stopping distance are given in Table 1. As given in the table the predicted results correlate extremely well with the test results for the 2,250-lb (1022-kg) vehicle. The results for the 4,500-lb (2043-kg) vehicle are somewhat lower than predicted values because an unexpectedly large number of the sand-filled drums were crushed. Although not proven by a test, the analysis shows that the crash cushion could decelerate safely an 1,800-lb (817.2-kg) vehicle impacting head-on at 60 mph (96.6 km/h).

CRASH TESTS

Four full-scale crash tests were conducted on the crash cushion shown in Figure 3. The first test examined the redirectional performance of the crash cushion and the other tests investigated its capacity to decelerate vehicles safely to a stop. Crash tests were conducted according to nationally recognized standards (4) and are summarized in Table 2. The crash cushion was designed and testing was initiated under the standards set by Transportation Research Circular 191 (4); however, NCHRP Report 230 (5) was published before completion of the final crash tests. Although the original test matrix was completed, the crash tests were evaluated by standards set in both reports. NCHRP Report 230 requires an additional crash test with a mini-car, which could not be conducted. However, the analysis shown previously indicates that the test would have been successful.

Table 1. Comparison of measured and predicted occupant risk values.

Vehicle Weight (lb)	Longitudinal Occupant Impact Velocity (ft/sec)		Avg Acceleration over Stopping Distance (g)	
	Predicted	Test Result	Predicted	Test Result
1,800	36	–[a]	9.3	–[a]
2,250	33	32.4	7.8	7.5
4,500	38	28.0	7.2	5.8

[a]No test conducted.

Figure 3. Narrow hazard crash cushion as tested in test 4.

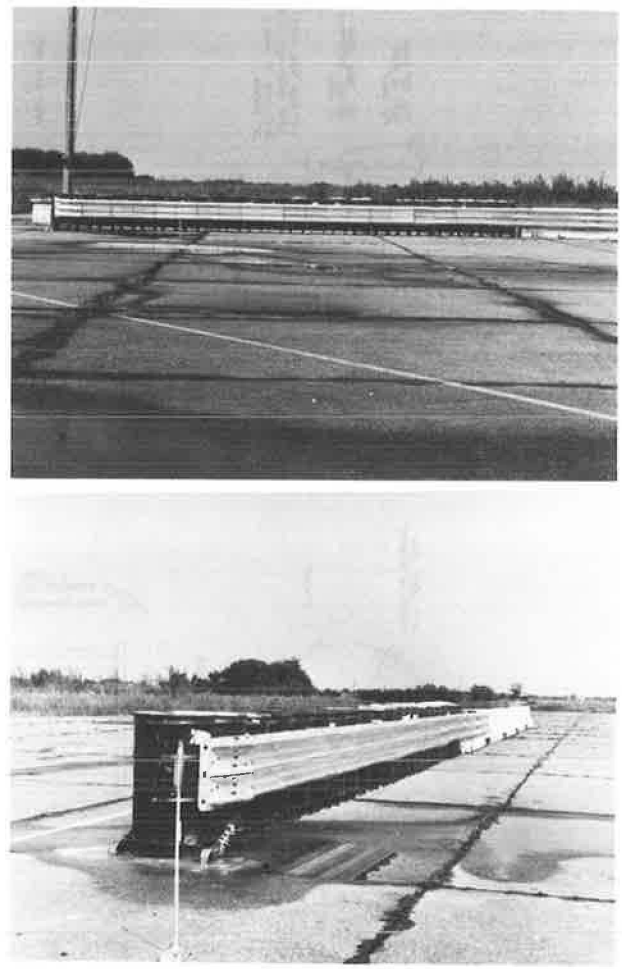

Test 1

The first test evaluated the redirectional performance of the crash cushion. In this test a 4,500-lb (2043-kg) vehicle impacted the midpoint of the cushion at 20 degrees and 55.3 mph (89.0 km/h). This test was selected to test the transition from continuous thrie-beam rail element to thrie-beam fish scales. The test vehicle was redirected smoothly and exhibited no tendency to snag on the crash cushion. As given in Table 2, all occupant risk values and the vehicle trajectory hazard were below recommended values (4,5). The large lateral deflections given in Table 2 were caused by longitudinal movement of the portable concrete barrier elements to which the crash cushion was attached. In a permanent installation the crash cushion would be attached to a continuous concrete barrier that cannot displace longitudinally.

Figure 4 shows the test vehicle and installation after test 1. As shown in this figure, the damage to the vehicle was not severe for a test of this nature. Restoration of the crash cushion required replacement of two 25-ft (7.6-m) sections of thrie

Table 2. Summary of crash tests.

Test No.	Vehicle Weight (lb)	Impact Speed (mph)	Angle of Impact (degrees)	Point of Impact	Vehicle Stopping Distance (ft)	Cushion Displacement		Occupant Impact Velocity		Vehicle Acceleration Data (g)					Vehicle Damage Classification	
										Occupant Ridedown, Peak 10 msec avg		Peak 50 msec avg		Avg Over Stopping Distance		
						Longitude (ft)	Latitude (ft)	Longitude (ft/sec)	Latitude (ft/sec)	Longitude	Latitude	Longitude	Latitude		Traffic Accident Damage Scale	Vehicle Damage Index
1	4,500	55.3	20	Barrel 11	NA	0	3.1	19.8	6.6	3.1	0.8	4.7	4.8	NA	10LFQ4	10LYEW4
2	2,410	58.7	0	Nose	15.3	15.3	-	32.3	-[a]	7.5	-[a]	11.6	0.9	7.5	12FD2	12FDEW3
3	4,500	60.5	0	Nose	20.9	20.9	-	28.0	-[a]	9.4	-[a]	8.4	0.7	5.8	12FD2	12FDMW2
4	2,335	59.7	10	1-ft offset from nose	11.4	11.4	1.2	38.9	-[a]	10.0	-[a]	12.9	2.0	10.5	1FL4	01FDEW5

[a]No occupant impact during test.

Figure 4. Test vehicle and installation after test 1.

beam, five drums, and two 37.5-in. (95.3-cm) thrie-beam fish scales. This test was considered successful based on the safety performance and the relatively light damage incurred by the crash cushion.

Test 2

Test 2 examined the head-on impact behavior of the crash cushion. In this test a 2,410-lb (1094-kg) Chevrolet Vega (1976) impacted the nose of the cushion at 0 degrees and 58.7 mph (94.4 km/h). The test vehicle was decelerated smoothly to a stop and did not pitch or yaw significantly during the test. Occupant impact velocities and vehicle accelerations (see Table 2) were within acceptable limits (4,5) for this type of test. One thrie-beam fish scale was detached from the third drum and skidded along the ground approximately 60 ft (18.2 m). In a highway situation this thrie-beam plate could have posed a hazard to other traffic.

As shown in Figure 5 damage to the test vehicle was extremely light for a test of this nature. Figure 6 shows the crash cushion after test 2. The crash cushion was restored by replacement of 18 steel drums. All other materials were salvageable. The test was considered successful.

Test 3

Test 3 evaluated the behavior of the cushion after

Figure 5. Test vehicle after test 2.

Figure 6. Test installation after test 2.

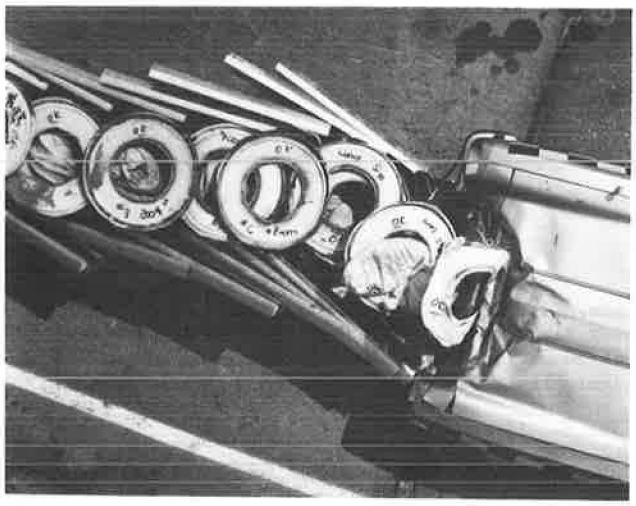

head-on impact with a large vehicle. For this test a 4,500-lb (2043-kg) Plymouth Fury (1977) impacted the nose of the crash cushion head-on at 60.5 mph (97.4 km/h). The test vehicle was decelerated to a stop smoothly over a distance of 20.9 ft (6.4 m). The front of the test vehicle pitched up less than 5 degrees and did not yaw significantly during the test. All occupant risk values (given in Table 2) were well below acceptable limits (4,5). A thrie-beam fish scale became detached from the third drum and skidded along the ground approximately 135 ft (41 m).

The test vehicle, shown in Figure 7, experienced light damage for a test of this nature. Figure 8 shows the crash cushion after test 3. The cushion was heavily damaged, as would be expected from this test; however, the only unsalvageable materials were 19 steel drums. This test was successful, with the exception of the thrie-beam plate that became detached from drum no. 3.

Test 4

Analysis of high-speed films from test 2 revealed that the test vehicle's bumper impacted the leading thrie-beam fish scale on the upstream side of the treatment before the drum to which the fish scale was attached was impacted. Researchers concluded that, if the leading fish scale could be bent around the drum and more bolts could be placed in it, this fish scale would not be dislodged during the head-on impacts. Therefore, two additional thrie-beam fish scales were added to the upstream side of the crash cushion before test 4. One of these thrie-beam plates, a standard thrie-beam end shoe, was attached to the leading drum and bent around it. Three bolts were also used to attach the end shoe to the drum.

Test 4 evaluated the crash cushion for unsymmetrical loading at the nose. For this test a 2,335-lb (1060-kg) Chevrolet Vega (1975) impacted the nose of the crash cushion at 10 degrees and 59.7 mph (96.1 km/h). On impact the left front side of the test vehicle snagged on the nose of the cushion. The vehicle then yawed approximately 45 degrees as it was decelerated smoothly to rest. The longitudinal occupant impact velocity was 38.9 ft/sec (11.9 m/sec), which is below the maximum recommended value of 40 ft/sec (12.2 m/sec). Other occupant risk values were also within acceptable limits (4,5). None of the thrie-beam fish scales became dislodged during this test.

Figure 7. Test vehicle after test 3.

Figure 8. Test installation after test 3.

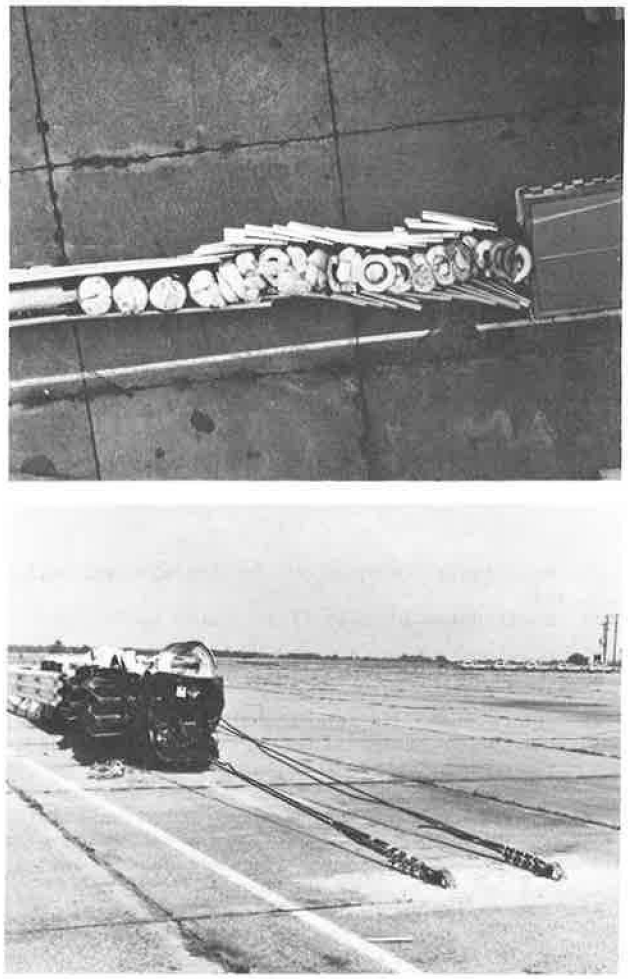

Figure 10. Test installation after test 4.

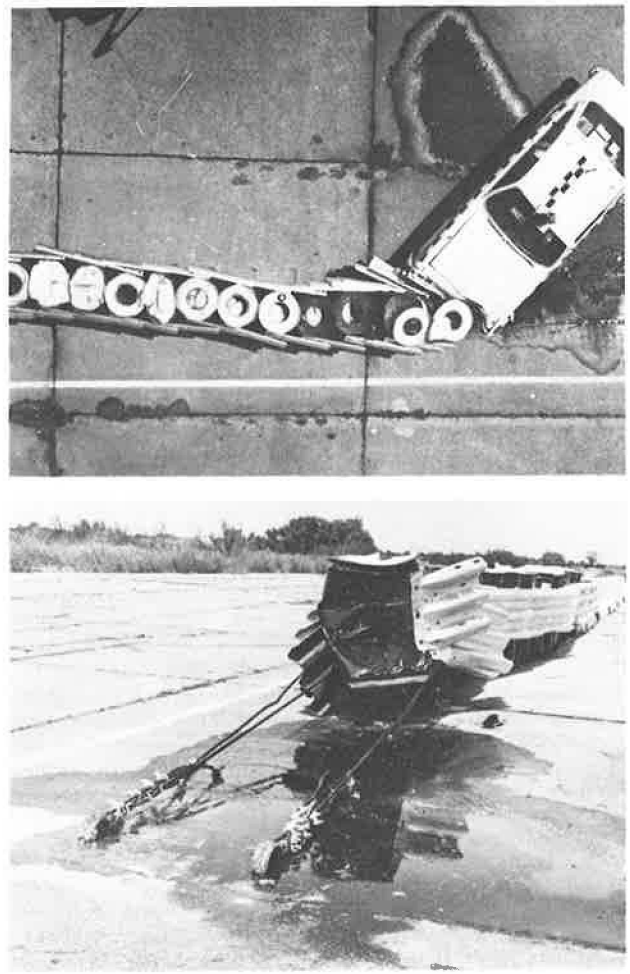

Damage to the test vehicle was moderate, as shown in Figure 9. Figure 10 shows the crash cushion after test 4. Restoration of the crash cushion involved replacement of 14 steel drums. The angle impact test on the nose of a crash cushion is a relatively new test and it is not known whether crash cushions tested previously could pass this test. Therefore, this test was considered successful even though the longitudinal occupant impact velocity was near the maximum acceptable limit.

Figure 9. Test vehicle after test 4.

CRASH CUSHION COSTS

Material costs and labor requirements for fabrication and installation of crash cushions are given in

Table 3. Installation costs of crash cushion.

Item	Cost ($)
Materials	
Steel drums	66
Thrie beam	694
Thrie-beam end shoes	135
C4 x 5.4 steel channels	179
5/8-in. steel cable	161
Sand bags and sand	360
Miscellaneous	247
Subtotal	1,842
Labor[a]	
Shop fabrication, 55 person-hr	825
Site installation, 39 person hr	585
Subtotal	1,410
Total	3,252

[a]Labor costs calculated at $15 per person-hr.

Table 4. Repair costs of crash cushion.

Repair	Item	Cost ($)
Replacement of damaged drums	Expendable material replacement, per drum	7.10
	Shop fabrication labor, including material salvage, 1.3 person-hr	19.50
		26.60
Repair of end treatment		
	Test 1	
	Material replacement	375.25
	Labor, 14.5 person-hr	217.50
	Total	592.75
	Test 2	
	Material replacement	127.80
	Labor, 38.9 person-hr	583.50
	Total	711.30
	Test 3	
	Material replacement	134.90
	Labor, 41.0 person-hr	615.00
	Total	749.90
	Test 4	
	Material replacement	99.40
	Labor, 30.2 person-hr	453.00
	Total	552.40

Note: Labor costs calculated at $15 per person-hr.

Table 3. Material costs were obtained through telephone bids and invoices for materials purchased during construction of the crash cushions. Labor requirements for fabrication were estimated from published productivity standards for industrial operations (6). Labor requirements for installation of crash cushions were estimated from observations of installation of the tested appurtenance. Material and labor requirements for the pavement cable anchor were not included in Table 3 because anchors used in the field would differ significantly from those used in the test installation.

As given in Table 3, total material costs for the narrow hazard crash cushion are approximately $1,841. Similar costs for commercial crash cushions are approximately $8,500. The total labor requirements for fabrication and installation of this safety treatment are fewer than 95 person-hours. If labor cost is $15 per person-hour, total costs for the crash cushion would be approximately $3,252. Thus, the initial cost of the narrow hazard crash cushion is approximately one-third of the cost of commercial crash cushions.

Estimates of repair costs for the tests conducted are given in Table 4. The average cost of repairing the barrier after the four tests was approximately $650. In view of the severity of the test conditions, this repair cost must be considered low. Therefore, repair costs for the crash cushion should be competitive with repair costs for other systems currently in use.

SUMMARY AND CONCLUSIONS

In recent years the CSSB has gained widespread acceptance. A nagging problem with this barrier has been the serious hazard to traffic posed by the end of the CSSB when it must be terminated within the clear zone. Inexpensive crash cushions are not currently available for the CSSB that are (a) crashworthy for permanent installations and (b) suitable for use in narrow medians. Therefore, a crash cushion has been developed to meet the following design criteria:

1. Constructed to impact performance standards as outlined in Transportation Research Circular 191 (4),
2. Suitable for use in narrow medians and for roadside applications,
3. Relatively inexpensive to install and maintain, and
4. Constructed of readily available materials.

The crash cushion depicted in Figures 1 and 2 consists of a single row of steel drums that have thrie-beam plates and steel cables on each side. Empty drums provide a yielding mechanism for head-on impacts and sand-filled drums aid in decelerating an errant vehicle smoothly. Steel cables and inertia of sand-filled drums provide redirective capability for the cushion. The narrow hazard crash cushion is only slightly wider than the CSSB and can be used in narrow medians as well as on the roadside.

All materials used in the construction of this crash cushion are available commercially, and the components of the cushion can be shop-fabricated and field-assembled. As given in Tables 3 and 4, the installation and maintenance costs of this crash cushion are relatively low compared with those for commercial crash cushions currently employed to protect the end of the CSSB.

Successful crash tests as required by Transportation Research Circular 191 (4) have been conducted to verify the crashworthiness of the crash cushion. In the first test a large vehicle was redirected smoothly. In tests 2 and 3 large and small test vehicles impacted the crash cushion head-on and were decelerated smoothly to a stop. For these tests all occupant risk values were at or below recommended levels (4,5). The final test involved a small car impacting the nose of the device at 10 degrees. For this test the vehicle yawed approximately 45 degrees as it was decelerated smoothly to a stop. The average acceleration over the stopping distance was 10.5 g and longitudinal occupant impact velocity for this test was 39 ft/sec, both of which are near maximum acceptable limits (4,5).

This crash cushion can be placed in narrow medians that could not be treated previously. The reduced cost associated with this cushion will allow placement of a safety treatment at sites where more expensive commercial cushions are either marginally or not now cost-effective. Therefore, this narrow hazard crash cushion should improve the level of highway safety.

REFERENCES

1. D.L. Sicking and H.E. Ross, Jr. An End Treatment for Concrete Barriers Used in Work Zones. Texas

Transportation Institute, Texas A&M Univ., College Station, Res. Rept. 262-2, Aug. 1982.
2. D.L. Sicking and H.E. Ross, Jr. An End Treatment for Narrow Objects. Texas Transportation Institute, Texas A&M Univ., College Station, Res. Rept. 296-1F, Aug. 1982.
3. T.J. Hirsch and D.L. Ivey. Vehicle Impact Attenuation by Modular Crash Cushion. Texas Transportation Institute, Texas A&M Univ., College Station, Res. Rept. 146-1, June 1969.
4. Recommended Procedures for Vehicle Crash Testing of Highway Appurtenances. TRB, Transportation Research Circular 191, Feb. 1978, 27 pp.
5. J.D. Michie. Recommended Procedures for the Safety Performance Evaluation of Highway Appurtenances. NCHRP, Rept. 230, March 1981, 42 pp.
6. Means Building Construction Cost Data. Robert Snow Means Co. Inc., Construction Consultants and Publishers, Kingston, Mass., 1982.

Publication of this paper sponsored by Committee on Safety Appurtenances.

Notice: The research reported herein was sponsored by the Texas State Department of Highways and Public Transportation in cooperation with FHWA. The opinions, findings, and conclusions expressed in this paper are those of the authors and not necessarily those of the sponsors.

Portable Traffic Barrier for Work Zones

DEAN L. SICKING, HAYES E. ROSS, JR., D.L. IVEY, and T.J. HIRSCH

A portable, positive construction zone barrier is described. The barrier is suitable for use at sites where work will take as little as several hours. It is constructed from used cars and thrie-beam guardrail. Two full-scale vehicular crash tests of the portable barrier are described that demonstrate its adequacy in terms of impact performance. The barrier can be used in construction zones where conventional positive barriers have been impractical.

The number of injuries and fatalities among Texas highway construction and maintenance personnel has increased greatly during the past several years. In one Texas highway maintenance district traffic accidents have caused 39 injuries and 12 fatalities among highway construction and maintenance personnel during the past 2 years. Examination of these accidents has revealed that most of the injury- and fatality-producing accidents occurred at construction sites or routine maintenance sites where all blocked travel lanes were to be cleared at the end of each work period. Normal traffic control for this operation includes arrow boards and cones for traffic channelization. Often most of the cones are knocked down during the course of a single work period. After cones have been knocked down drivers may be confused and return to the blocked lane. Errant motorists also enter work zones as a result of collisions with other motorists or roadside objects.

Initial efforts to reduce the number of accidents in these work areas included increasing the number of law enforcement personnel, increasing efforts to replace cones that had been knocked down, reducing the length of the work zones, and conducting the work only during periods of light traffic. None of these alternatives proved effective, however, so an effort was made to develop a portable, positive barrier for use in certain critical work zones.

Conventional construction zone positive barriers include portable precast concrete barriers and W-beam on barrels. These barriers cannot be erected and removed quickly enough to allow their use in construction and maintenance zones where all blocked lanes are to be cleared at the end of each work period. Therefore, this research was undertaken to develop a truly portable positive work zone barrier that would be (a) portable enough for use in maintenance zones that are to be in place for only a few hours, (b) crashworthy for use in construction zones, and (c) relatively inexpensive to construct and maintain. The findings of a research study conducted in 1981 (1) are described in the following sections.

PORTABLE CONSTRUCTION ZONE BARRIER

A truly portable construction zone barrier can be brought to the work site and set up in a few minutes. Heavy machinery or specialized equipment should be unnecessary because these may not be available at the site. The barrier must be capable of redirecting an errant vehicle without deflecting it excessively and thereby endangering workers standing behind the barrier. Finally, the barrier should be relatively inexpensive to build and maintain.

Researchers examined many portable construction zone barrier concepts before concluding that the used car barrier was the most promising design considered. This barrier consists of a line of cars connected together with tow bars. The barrier is portable and can be driven to the work site. Special equipment is not required for its setup, and the barrier is relatively inexpensive when compared with other barriers considered.

The used car barrier is shown in Figure 1 and described in Figures 2 and 3. The vehicles used in

Figure 1. Used car barrier.

the barrier were 1973 and 1974 Plymouth Suburban station wagons. These vehicles have torsion bar front suspension, which allows the height of the front bumper to be adjusted easily for towing. Standard thrie-beam guardrail is attached to each of the vehicles, as shown in Figure 3. The thrie beam provides a continuous, smooth surface to prevent impacting vehicles from snagging on the used cars. A hinged thrie-beam gate prevents impacting vehicles from snagging on the joints between barrier vehicles. The gate hinges are attached to the front of a vehicle and the thrie-beam gate rests against the

Figure 2. Construction drawing of used car barrier.

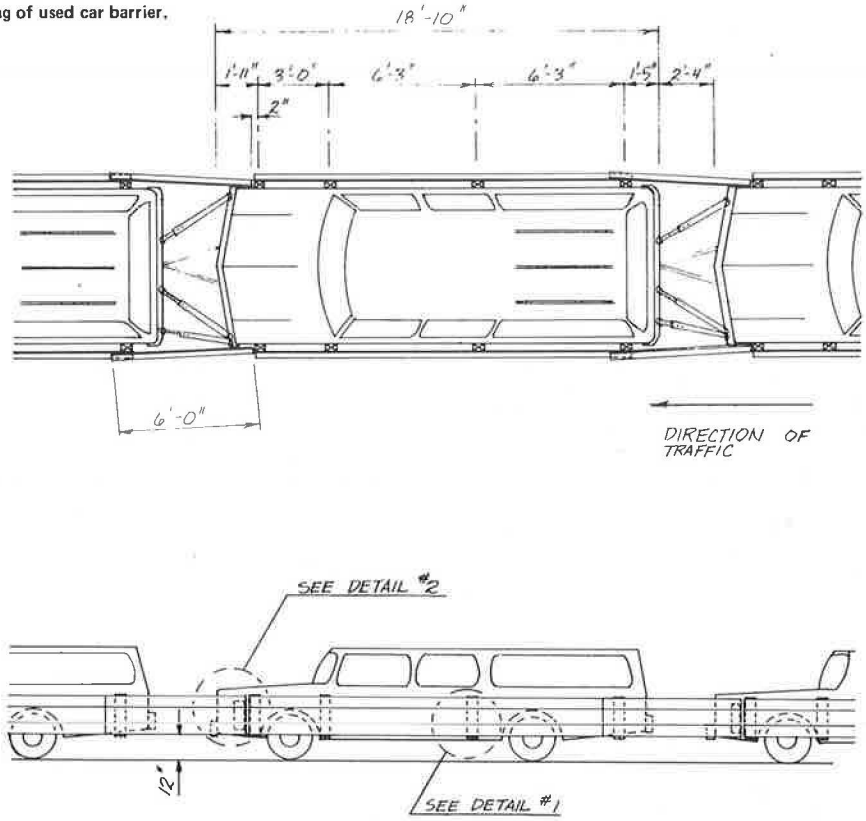

Figure 3. Details of thrie-beam attachment to barrier.

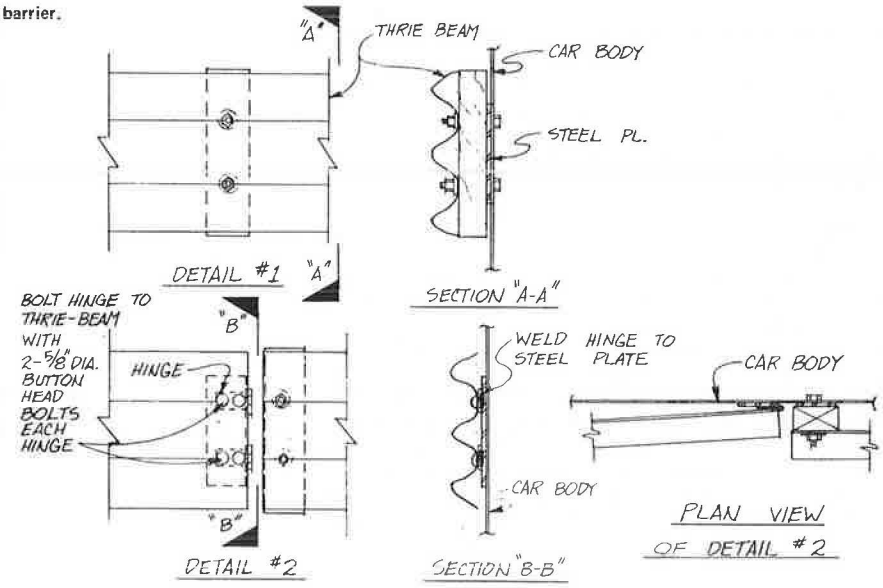

rear of the next vehicle. The gate is not attached to the rear of the next vehicle; therefore, the barrier can turn a corner. The thrie beam is blocked out 3.5 in. (8.9 cm) from the vehicles to reduce the possibility of wheel snag on the barrier and to allow the front wheels of the barrier vehicles to turn.

Three telescoping tube members (see Figures 4 and 5) were constructed from standard schedule 40 steel pipe and are used to develop moment and shear capacity between the barrier vehicles. The top photograph in Figure 4 is a left-side view. The bottom photograph is a right-side view. When the barrier is to be moved only one of the members must be removed from the joint and two steel pins must be removed from each of the other members. Telescoping members are designed to withstand an 18-kip (80.0-kN) axle load before yielding begins. The yield moment of the car-to-car joint is approximately 50 kips-ft (67.8 kN•m). The vehicle bumpers were reinforced to develop the yield strength of the telescoping tube members. Figure 6 shows front (top) and rear (bottom) views of reinforcement details. As shown in Figure 5, commercially available heavy-duty tow bars are employed to move the barrier. The tow bars remain in place when the barrier is put into service, thereby reducing setup time.

The used car barrier constructed at the Texas Transportation Institute (TTI) consisted of five

Figure 4. Barrier segment connection details.

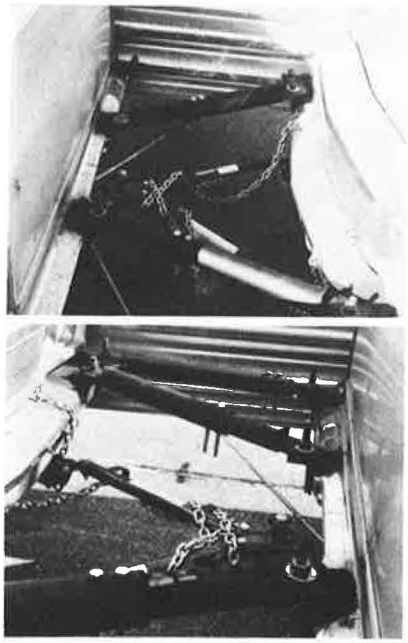

Figure 5. Details of barrier vehicle joints.

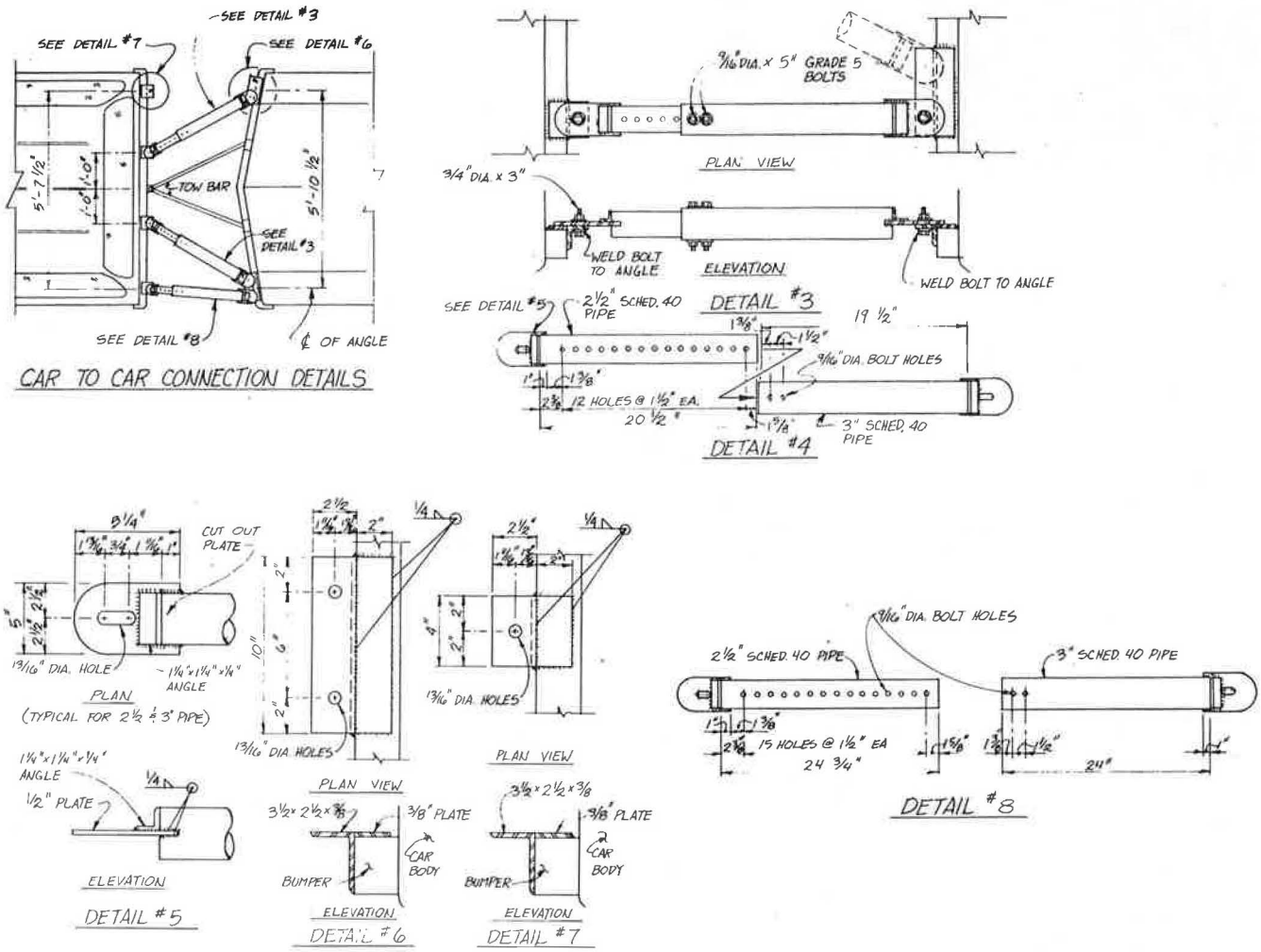

Figure 6. Bumper reinforcement details.

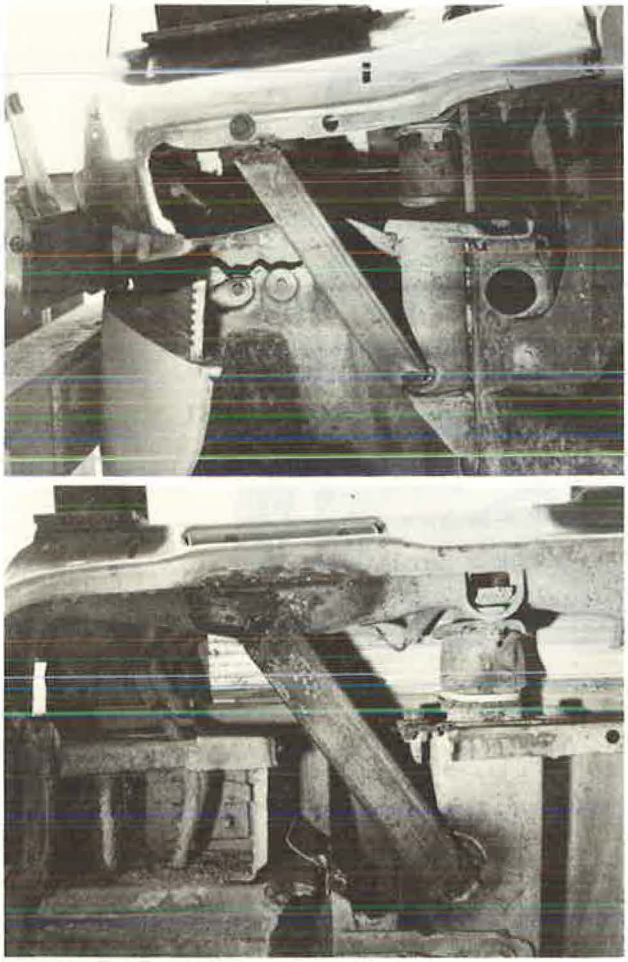

vehicles. The lead car was maintained in operational condition and was used to tow the barrier. Although the barrier could not be backed up, it was still maneuverable and had a turning radius approximately twice that of a conventional automobile. The time required to set up the barrier is short because only one telescoping member and four pins must be placed in each joint at setup time. The barrier was 92 in. (234 cm) wide and 100 ft (30.5 m) long and cost approximately $7,000. At a cost of $70/ft the barrier is inexpensive when compared with other alternatives.

IMPACT PERFORMANCE CRITERIA

Current test standards contained in NCHRP Report 230 (2) recommend that temporary barriers be designed for impact conditions equal to those for permanent barriers. However, the type of barrier discussed here (i.e., a highly portable, relatively short, longitudinal barrier system) is not addressed specifically in NCHRP Report 230. Preliminary analysis indicates that such a system would be difficult and impractical to design to meet permanent barrier standards. Selection of crash test conditions (vehicle size, impact speed, and impact angle) was therefore made jointly by TTI and Texas State Department of Highways and Public Transportation (TSDHPT) engineers. Factors considered in the subjective selection process included exposure time, traffic speeds in work zones, costs, and the state of the art for temporary barriers. As a result of this process the test conditions described in the following section were chosen.

ANALYSIS

The used car barrier should behave similarly to the portable precast concrete traffic barrier when it is impacted by an errant vehicle. Both barriers are a series of large rigid beams that have moment-resisting joints. The used car barrier was therefore analyzed with a computer program developed to model portable precast concrete barriers (3).

The algorithm used to examine impact with the barrier is a two-dimensional model designed to predict barrier deflections and the forces transmitted by the barrier joints. Therefore, only impacts with a large, 4,500-lb (2043-kg) vehicle were investigated because impacts with smaller vehicles would produce lower deflections and joint loadings. Predicted barrier deflections for the impact conditions investigated and barrier deflections for the crash tests conducted are given in Table 1. As given in the table, predicted barrier deflections compare well with test results. Further, the computer model predicted a barrier deflection of only 26 in. (66 cm) for an impact at 60 mph (96.6 km/h) and 25 degrees, which is a small deflection for a test of this severity. Therefore, the barrier is acceptable for use in place of conventional construction zone barriers.

TEST RESULTS

Two full-scale crash tests were conducted on the used car barrier (see Figure 7). The tests conducted were designed to evaluate the limits of the barrier's performance. Impact with small vehicles was not investigated because barrier performance is similar to that of the thrie-beam guardrail for small-vehicle and low-angle impacts. The impact point for both tests was upstream from the last joint between the barrier vehicles. This point of impact should cause maximum barrier deflection and give the greatest possibility of joint failure and vehicle snag on the barrier. The tests are summarized in Table 2.

Test 1

In the first test a 4,500-lb (2043-kg) vehicle impacted at 51.7 mph (83.2 km/h) and 7 degrees. The test vehicle was redirected smoothly and exhibited no tendency to become snagged on the barrier. As the data given in Table 2 indicate, all occupant

Table 1. Barrier deflections.

Impact Velocity (mph)	Impact Angle (degree)	Max. Barrier Deflection (in.)	
		Predicted	Actual
50	7	0.5	2.0
50	15	10.0	7.2
60	15	15.0	–[a]
60	25	26.0	–[a]

[a]Crash test not conducted.

Figure 7. Used car barrier test configuration.

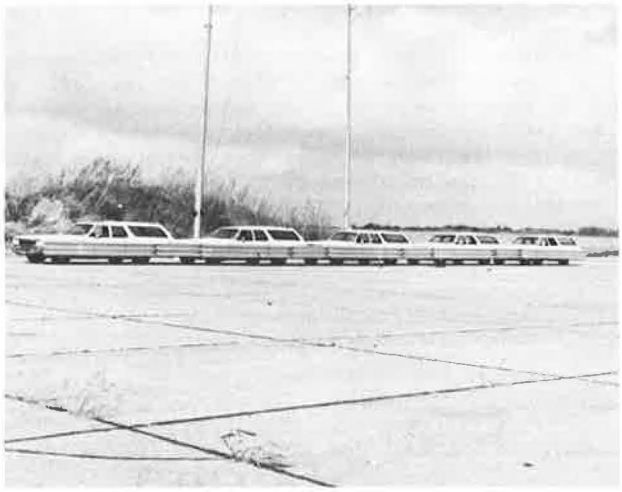

Figure 8. Test vehicle and barrier after test 1.

Table 2. Summary of crash tests.

Item	Test 1	Test 2
Impact speed (mph)	51.7	48.3
Impact angle (degrees)	7	15
Exit angle (degrees)	2	2
Barrier displacement (in.)	2	7.2
Occupant impact velocity (ft/sec)		
Longitudinal	10.9	12.1
Lateral	0	0
Occupant ridedown acceleration (g)		
Longitudinal	2.8	8.66
Lateral	0	0
Vehicle damage classification		
Traffic Accident Damage Scale	10RFQ1	10RFQ3
Vehicle Damage Index	10RFMW1	10RFMW3

Figure 9. Test vehicle after test 2.

risk values and the vehicle trajectory hazard were well below recommended values (3).

Figure 8 shows the test vehicle and barrier after test 7. As shown in this figure, damage to the test vehicle was limited to sheet metal deformations. The barrier sustained no visible damage and was driven from the test site. Barrier displacement was limited to 2 in. Test 1 was considered successful because damage to the test vehicle was light and damage to the barrier was negligible.

Test 2

In test 2 a 4,500-lb (2043-kg) vehicle impacted the barrier at 48.3 mph (77.7 km/h) and 15 degrees. The vehicle damage from test 1 was light, so the same vehicle was used in test 2. The test vehicle was redirected smoothly and, as the data given in Table 2 indicate, occupant risk values and the vehicle trajectory hazard were below recommended limits (3). Note that no lateral occupant impact occurred during the 3 sec for which accelerometer data were analyzed. Maximum barrier deflection was limited to 8.4 in.

The test vehicle (see Figure 9) was damaged only lightly. Barrier damage (see Figure 10) was limited to minor deformations in the thrie-beam rail and the barrier vehicle sheet metal. The barrier was driven from the test site, and no barrier repair was required. This test was also considered successful.

Figure 10. Used car barrier after test 2.

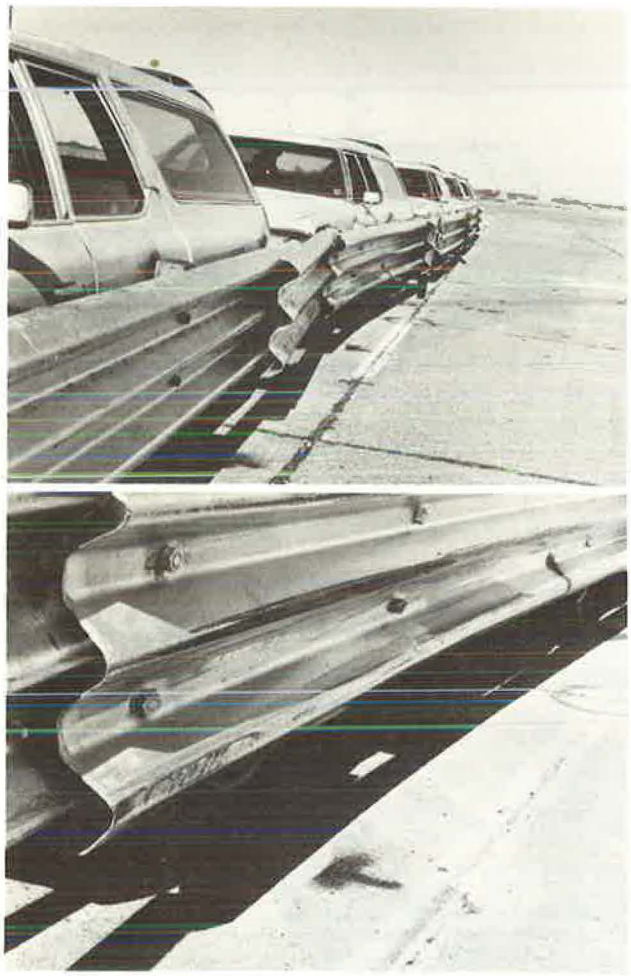

SUMMARY AND CONCLUSIONS

The number of injuries and fatalities among Texas highway construction and maintenance personnel has increased significantly in recent years. Investigation of the problem revealed that much of this increase resulted from accidents at short-duration construction and maintenance zones, and the only practical solution was to employ positive barriers at these sites. None of the construction zone barriers currently in use can be installed and removed quickly enough for use at short-duration construction sites. Therefore, a truly portable positive construction zone barrier has been developed that is (a) portable enough for use in maintenance zones that are to be in place for only a few hours, (b) crashworthy for use in construction zones, and (c) relatively inexpensive to construct and maintain.

The used car barrier consists of a line of used cars with thrie-beam guardrail attached to each side. Telescoping tube members provide moment capacity in the joints and hinged thrie-beam gates provide a smooth redirecting surface between barrier vehicles. The lead vehicle is maintained operational and can be used to tow the barrier.

The barrier was crash tested successfully with a 4,500-lb (2043-kg) vehicle at an impact speed of 48.3 mph (77.7 km/h) at an angle of 15 degrees. Barrier deflection for this test was 8.4 in. (21 cm). Computer simulation of an impact at 60 mph (96.6 km/h) and 25 degrees with a 4,500-lb (2043-kg) vehicle predicted only 26 in. (66 cm) of barrier deflection.

The used car barrier was constructed for testing at a cost of approximately $70/ft of barrier. No barrier repairs were required subsequent to the two crash tests conducted; therefore, the barrier should be inexpensive both to construct and to maintain. The barrier can be placed on either a tangent or in a transition zone (see Figures 11 and 12). Figure 12 shows photographs of a barrier in use on Houston

Figure 11. Applications of used car barrier.

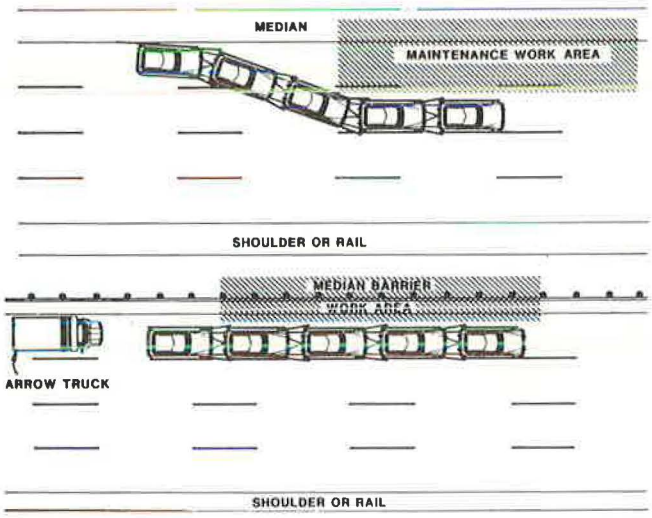

Figure 12. Used car barrier in use at maintenance site.

freeways. The barrier was used at several test sites after the study was completed, and it has performed well according to TSDHPT engineers.

The used car barrier can be used to protect highway construction and maintenance personnel at work sites where conventional positive construction zone barriers are impractical. It can be set up and removed quickly enough to be used when maintenance is scheduled to take only a few hours. The used car barrier should therefore reduce injury and fatality rates among highway construction and maintenance personnel.

REFERENCES

1. A Portable Traffic Barrier for Work Zones. Texas Transportation Institute, Texas A&M Univ., College Station, Res. Rept. 2262-3, Nov. 1982.
2. J.D. Michie. Recommended Procedures for the Safety Performance Evaluation of Highway Appurtenances. NCHRP, Rept. 230, March 1981, 42 pp.
3. J.D. Michie. Recommended Procedures for the Safety Performance Evaluation of Highway Appurtenances. NCHRP, Rept. 230, March 1981, 42 pp.

Publication of this paper sponsored by Committee on Safety Appurtenances.

Notice: The research reported herein was sponsored by the Texas State Department of Highways and Public Transportation in cooperation with FHWA. The opinions, findings, and conclusions expressed in this paper are the authors' and not necessarily those of the sponsors.

Crash Tests of Portable Concrete Median Barrier for Maintenance Zones

JAN S. FORTUNIEWICZ, JAMES E. BRYDEN, AND RICHARD G. PHILLIPS

An 8-ft version of New York's standard 20-ft portable barrier was evaluated through full-scale crash tests. The 8-ft barrier is both shorter and more portable than the standard concrete median. It employs the basic New Jersey shape and New York's pin-connected joints but is not connected to the pavement. Four full-scale crash tests were performed with 2,250- and 4,500-lb sedans at about 60 mph and 15- or 25-degree angles. Test results were generally good in terms of vehicle accelerations and occupant-vehicle impact velocities. Lateral barrier movement was similar to that experienced with the 20-ft barrier sections. Vehicle reactions were somewhat violent, especially in the 25-degree impacts, which demonstrates the severity of high-angle impacts with rigid barriers. Smooth barrier surface textures appear to be important for minimizing vehicle roll angles. Performance of 8-ft barriers appears comparable to that of the 20-ft lengths now in use.

Research reported by New York State in 1980 (1) demonstrated that a portable concrete barrier with 20-ft sections is suitable for use on construction projects. A similar use of portable concrete median barrier (CMB) by state maintenance forces could improve safety in work zone situations for both state forces and the motoring public. Some drawbacks of the standard 20-ft CMB, as noted by the New York State Department of Transportation's (NYSDOT) Highway Maintenance Division, are its size, weight, and requirements for handling equipment. A standard 20-ft long section weighs about 8,000 lb and must be set in place by a crane. Maintenance forces often have only light equipment available to move and set barriers, and the amount of heavy equipment that would be required to move and set a 20-ft CMB is unavailable. The Highway Maintenance Division suggested 8-ft sections, weighing about 3,200 lb each, for full-scale crash tests to determine the performance on impact of the shorter barrier. Verification of adequate performance of the shorter sections of temporary CMB would permit their use in an anticipated major bridge rehabilitation program during the next decade and in other maintenance work zones where a positive temporary barrier is warranted.

METHODOLOGY AND DESCRIPTION OF BARRIER

Four full-scale tests were conducted to determine the performance of 8-ft sections of portable CMB with New York State's standard pinned connection (Figure 1). Evaluation parameters included vehicle redirection and impact severity, barrier damage, and barrier movement. Testing details were taken from Transportation Research Circular 191 (2). Data analysis and reporting procedures were subsequently revised to reflect the requirements specified in NCHRP Report 230 (3).

The test matrix was composed of longitudinal barrier length-of-need tests designated in NCHRP Report 230 as nos. 10 and 11. Two strength tests were performed--one with and one without added joint restraints--and impact severity tests were performed on both smooth- and rough-textured barriers. This test matrix was sufficient to determine if the shortened version of the portable CMB would perform satisfactorily and to find any drawbacks because of the smaller mass of each unit.

In all tests the barrier was the basic New Jersey shape as used for the current standard New York barrier (standard sheet 619-3R2), following reinforcement recommendations by Southwest Research Institute (4). Except for section length and minor adjustments in reinforcing detail, the revision was identical to New York's current standard. The barrier installation consisted of 20 sections of 8-ft barriers, placed in a straight line and anchored by three steel pins into the pavement at the first and last section. Joints were secured by connection keys. For one of the four tests, sections were pulled to remove any slack in the joints, and portland-cement mortar was packed into the bottom of the joint to restrain movement during impact. The test sections were placed on an asphalt pavement to simulate typical field installations. The 8-ft sections were delivered with a rough-brushed surface texture which the fabricator had applied to cover minor air voids. For the final test, two 20-ft barrier sec-

Figure 1. Portable CMB details.

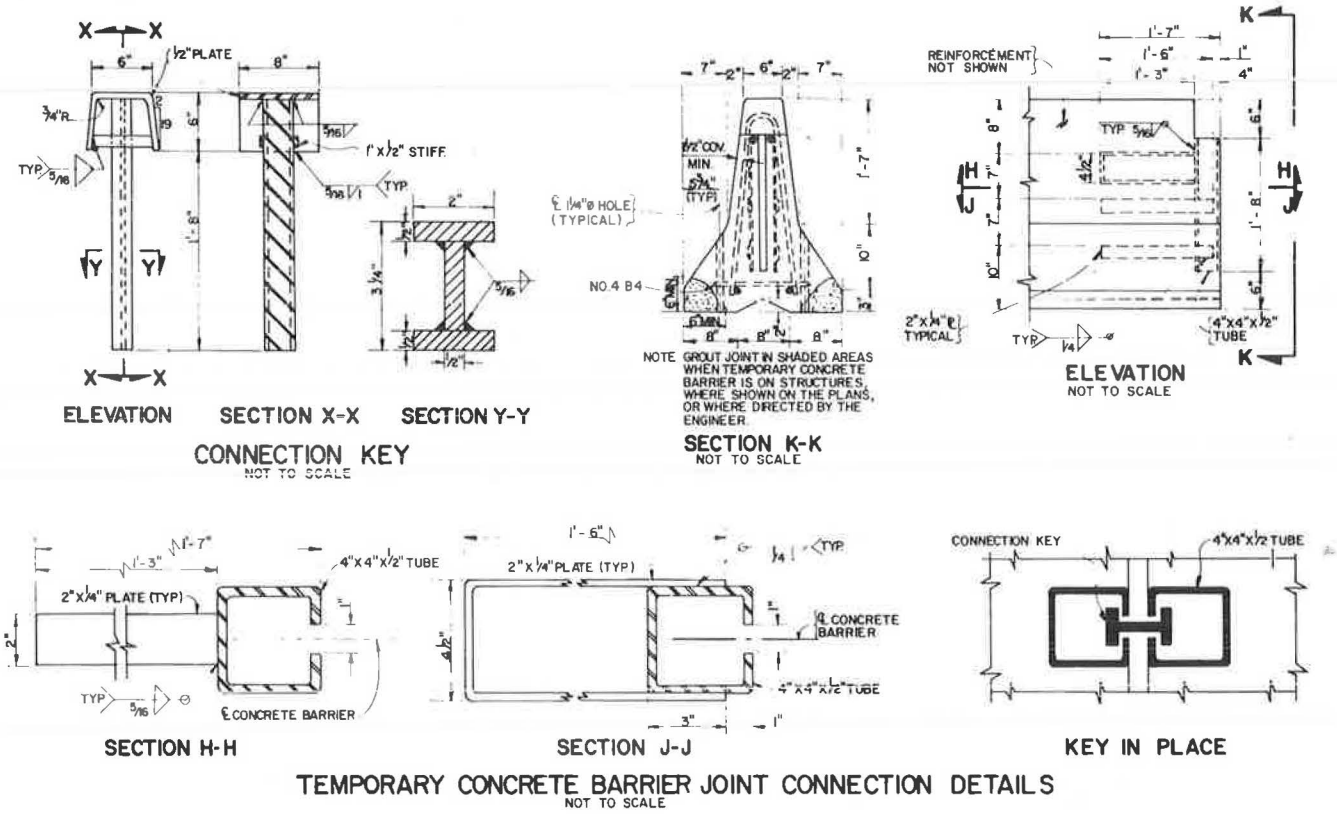

tions with a smooth surface texture were substituted in the impact zone to determine the effect of the rough surface on vehicle redirection. Because the first three tests on the 8-ft sections demonstrated that the 8- and 20-ft sections performed about the same in terms of lateral barrier deflection, differences in the fourth test could be attributed to surface texture.

RESULTS

Results of the four full-scale crash tests of the 8-ft-long portable CMB are summarized in Table 1. Lateral movement is summarized in Table 2. The total barrier joints affected by impacts in both lateral and longitudinal directions are summarized in the table below. Note that in test 44 the vehicle had post-impact contact with the barrier along the top edge; the barrier was anchored at the upstream and downstream ends. In test 46 the joints were grouted. In test 47 two 20-ft sections were in the impact zone.

	Total Joints Displaced	
Test	Longitudinal	Lateral
44	16	7
45	6	4
46	9	8
47	7	4

In the first test (no. 44), a 4,300-lb Plymouth sedan hit the CMB installation 58.0 ft from the beginning at 64.9 mph and 27.1 degrees. On impact the vehicle's right side immediately climbed to the CMB top, the hood opened, and the vehicle pitched up -8 degrees and deflected the barrier about 17.0 in. Peak g's were 14.2 longitudinal and 18.9 lateral, with peak 50-msec averages of 7.2-g longitudinal and 8.6-g lateral. The vehicle was redirected, but, because it was at a high roll angle of -54 degrees left and had its underside against the barrier, redirection was not smooth. The vehicle contacted the barrier a number of times and the right-rear tire caught behind the barrier top when its right side came down. The left-front tire directed the vehicle's front away from the barrier initially, with a 10-degree left exit angle, but, when the damaged right-front tire recontacted the ground, the front end pitched down to a maximum of +23 degrees and increased its deceleration. The rear end lifted and the vehicle rolled right 180 degrees, yawed 90 degrees left about its front end, and came to rest on its roof.

Vehicle damage was severe--the roof and hood were dented, front suspension was heavily damaged, the frame was damaged, the right-side sheet metal was damaged, and both right tires were blown. Roof crush was probably exaggerated because the targets concentrated the impact in the center of the roof. Barrier damage was moderate and consisted mostly of scratches and spalled areas. Section 7 had a cracked base and sections 8 and 9 had hairline cracks in the backside surfaces (Figure 2).

In the second test (no. 45), a 2,175-lb Vega impacted the CMB installation 54.0 ft from the beginning at 65.5 mph and 16.1 degrees. The vehicle's right side immediately climbed to the CMB top and pitched up -2 degrees. The barrier was deflected 2.75 in. The right-front tire blew out and the steering and suspension were damaged on impact. Peak g's were 11.4 longitudinal and 10.5 lateral with peak 50-msec averages of 5.6-g longitudinal and 6.8-g lateral. The vehicle was redirected with an exit angle of 5 degrees left and maximum pitch down of +8 degrees, with a maximum roll left of -64 de-

Table 1. Test results.

Item	Test 44	Test 45	Test 46	Test 47
Impact conditions				
Speed (mph)	64.9	65.5	61.1	61.4
Angle (nominal)	25.0	15.0	25.0	15.0
Angle (measured from film)	27.1	16.1	25.2	15.2
Vehicle weight (lb)	4300	2175	4350	2175
Point of impact[a]	58.0	54.0	54.5	53.0
Exit angle	10.0	5.0	8.0	5.0
Exit speed (mph)	30.8	55.4	45.3	53.2
Max roll (degree)	-54.0[b]	-64.0	-42.0	-11.0
Max pitch (degree)	+23.0	+8.0	+10.0	+3.0
Max yaw (degree)	+90.0	0.0	+270.0	0.0
Barrier length (ft)	160.0	160.0	160.0	160.0
Contact distance (ft)[c]	16.0	22.0	20.5	29.0
Initial total distance	80.0		70.0	
Time (msec)	1,458[d]	287	1,790[d]	206
Barrier deflection (in.)	17.00	2.75	6.75	3.50
Accelerations (g)				
50-msec avg				
Longitudinal	7.2	5.6	5.6	3.5
Lateral	8.6	6.8	6.1	7.5
Max peak				
Longitudinal	14.2	11.4	12.7	7.9
Lateral	18.9	10.5	10.5	11.1
Occupant impact velocity (ft/sec)				
Longitudinal, 2.0 ft	24.1	16.7	21.6	-[e]
Lateral, 1.0 ft	19.2	13.6	17.6	15.3
Occupant ridedown acceleration				
Longitudinal, 10-msec avg (g)	6.0	3.3	5.0	-[e]
Lateral, 10-msec avg (g)	7.4	7.9	5.7	6.0

Notes: Test 44—Ungrouted joints, Test 45—Ungrouted joints, Test 46—Grouted joints, and Test 47—Two smooth-faced 20-ft sections in impact zone, ungrouted joints.

[a]From beginning of installation.

[b]Vehicle rolled + 180 degrees after leaving barrier.

[c]Initial impact contact distance, not counting lateral contact.

[d]From first contact to last contact with barrier.

[e]Occupant impact did not occur; maximum occupant velocity relative to vehicle was 7.5 ft/sec.

Table 2. CMB lateral movement.

	Base Movement (in.)[a]							
	Test 44		Test 45		Test 46[b]		Test 47[c]	
Joint	Upstream	Downstream	Upstream	Downstream	Upstream	Downstream	Upstream	Downstream
1	–	–	–	–	–	–	–	–
2	–	–	–	–	–	–	–	–
3	–	–	–	–	–	–	–	–
4	–	–	–	–	-1.0	-0.5	–	+0.5
5	–	–	–	–	-2.5	-2.75	–	–
6	-6.0	-6.0	-1.75	-2.00	-4.5	-4.5	-2.0	-2.5
7	-13.5	-13.75	-2.75	-2.75	-6.75	-6.5	-3.5	-2.75
8	-17.0	-17.0	-1.75	-1.75	-6.75	-6.75	+0.5	–
9	-13.25	-12.5	-0.50	-0.50	-5.00	-5.00	–	–
10	-4.5	-4.5	–	–	-3.0	-3.0	–	–
11	+1.5	+1.0	–	–	-1.0	-1.50	–	–
12	+2.0	+2.0	–	–	–	–	–	–
13	–	–	–	–	–	–	–	–
14	–	–	–	–	–	–	–	–

Notes: In tests 45, 46, and 47 impact occurred between joints 6 and 7. In test 44 impact occurred between joints 7 and 8.

[a]Movement is displacement from original position: – means away from traffic, and + means toward traffic; all measurements to the base made from reference marks of original position on pavement.

[b]Grouted joints.

[c]Two 20-ft sections in impact zone.

grees. The vehicle would have rolled over had not the 1-in.^{2} data cable bar mounted on the rear contacted the ground and acted as a counterforce to its roll. After leaving the barrier, the full weight of the vehicle came down on the left side, the right side recontacted the ground, and the damaged front end caused the vehicle to swerve to the left, where it was stopped by a cable and safety fence.

Vehicle damage was moderate--the steering and front suspension were damaged, the right-front tire was blown, the front end and right side had sheet-metal damage, and the right-hand edge of the windshield was cracked. Barrier damage was only cosmetic, such as scratches and tire marks.

In the third test (no. 46), a 4,350-lb Chevrolet sedan impacted the CMB installation (with grouted joints) 54.5 ft from the beginning at 61.1 mph and 25 degrees. On impact its right side climbed to the

Figure 2. Barrier damage from test 44 (left) and test 46 (right).

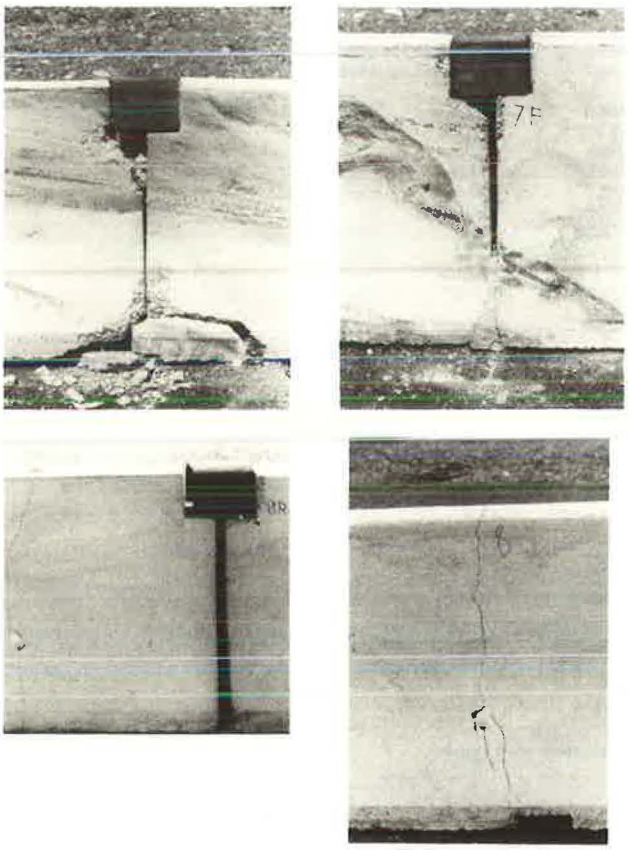

CMB top, the vehicle pitched up -5 degrees, and the barrier was deflected 6.75 in. Peak g's were 12.7 longitudinal and 10.5 lateral, with peak 50-msec averages of 5.6-g longitudinal and 6.1-g lateral. The vehicle was redirected with an exit angle of 8 degrees left and a maximum roll of -42 degrees left. The right-rear tire caught behind the barrier as the vehicle lost roll angle, which caused its weight to be shifted to the left-front tire with a maximum pitch down of +10 degrees and yawed it to the left. The rear end of the vehicle remained on the barrier while yaw increased and the roll changed to the right. The damaged right-front tire and suspension were brought down to the ground, the vehicle decelerated further, and yaw increased. The rear end of the vehicle reached the end of the barrier installation and came off the barrier then bounced on the ground and continued to yaw until it was stopped by the cable and safety fence with a maximum yaw of +270 degrees left.

Vehicle damage was severe; the front and rear suspension were particularly affected. Both right tires were blown, the front sheet metal and bumper were damaged, and the windshield was cracked. Barrier damage (Figure 2) was moderate, including scratches, gouges, hairline cracks, and broken corners.

For the last test a smooth-finish barrier face was used instead of the rough hand-finished texture that was supplied by the precasting company and used in the first three tests. Because the 8-ft sections on hand had a rough-textured finish, two 20-ft CMB sections left over from previous tests were used for test 47 in the impact area to determine if surface texture affected vehicle roll. High roll angles were observed in the first three tests. The angles seemed to relate to the rapid front tire climb after barrier contact. Barrier deflections recorded in the first three tests were sufficient for evaluation of the 8-ft CMB sections, and lateral barrier deflection appeared similar to that of the 20-ft sections tested earlier.

In test 47 a 2,175-lb Vega impacted the CMB installation 53.0 ft from the beginning at 61.4 mph and 15.2 degrees. On impact the vehicle climbed the barrier, but this time only halfway up, and pitched up less than -3 degrees. Maximum roll was -11 degrees right, and it was redirected quite smoothly. Peak g's were 7.9 longitudinal and 11.1 lateral; peak 50-msec averages were 3.5-g longitudinal and 7.5-g lateral. A maximum pitch of +3 degrees down preceded its loss of contact with the barrier. The vehicle left the barrier 82 ft from the beginning at an exit angle of 5 degrees left. No yaw was observed and the vehicle continued its exit until stopped by safety cables.

Vehicle damage was moderate, mostly involving sheet metal and the front suspension and steering. The barrier was not damaged except for scratches and tire marks. Deflection was measured as 3.5-in. maximum.

DISCUSSION AND FINDINGS

Several advantages are offered by 8-ft barrier sections compared with the now-standard 20-ft sections. In addition to improved ease of handling because of shorter length and lighter weight, the 8-ft barrier sections can also provide better conformity with uneven pavement. However, before shorter sections could be used, it was necessary to ensure that barrier performance was not affected adversely by the shorter sections and to determine their deflection on impact.

Earlier work by Ivey (5) predicted that deflections would be similar for the two section lengths; however, the 20-ft sections were expected to deflect slightly more than shorter ones, provided that barrier unit weight remained constant. Table 3 compares lateral deflections for tests with both the 8- and 20-ft sections. In test 17 compared with test 44, with ungrouted joints, the 8-ft sections deflected only 1 in. more, although impact speed was 12 mph greater. In test 18 compared with 46, with grouted joints, the 8-ft sections deflected less than the 20-ft sections, although impact speed was 6 mph higher. Tests 44 and 46 also reconfirmed the value of pulling the joints tight and packing with grout to reduce joint deflection.

The current design deflection distances for 20-ft sections and impact conditions of 4,500-lb sedans at 60 mph and 25 degrees are 11 and 16 in. for grouted and ungrouted joints, respectively. Based on these

Table 3. Comparison of lateral barrier deflections for 20- and 8-ft section lengths.

Test	Impact Conditions: Vehicle Weight (lb)	Speed (mph)	Angle (°)	Barrier Length (ft)	Deflection (in.)
17[a]	4,250	53	25	20	16
18[a]	4,230	55	25	20[b]	11
44	4,300	65	27	8	17
46	4,350	61	25	8[b]	6.75
45	2,175	66	16	8	2.75
47	2,175	61	15	20	3.50

[a]From Hahn and Bryden (1). [b]Grouted.

tests, the use of the same design deflections for any section lengths between 8 and 20 ft appears to be conservative. Although some small refinement in these deflection values might be possible, any such change would probably be no more than a few inches and thus does not justify additional testing for such a small refinement. Finally, comparison of tests 45 and 47 confirms that substitution of the 20-ft sections in the final test had only a minimal effect on barrier deflection.

NCHRP Report 230 (3) provides the current evaluation criteria to which this barrier's performance was compared in Table 4. Portable CMB has generally met structural adequacy criteria when strong joint connections were used between sections, and these 8-ft sections also proved adequate. Criterion A, which requires vehicle redirection, and criterion D, which prohibits barrier fragments, were both met by this barrier, although redirection trajectory was not smooth for the two large-sedan tests. In addition, in both of the large car tests, the vehicles protruded behind the top of the barrier, which might result in a hazard if workers or equipment were located near the back of the barrier. However, these reactions are typical of other crash tests of concrete barrier, in terms of both vehicle trajectory and protrusion behind the barrier (4,6,7), and point out the desirability of limiting this barrier to locations where high-angle, high-speed impacts are unlikely.

In terms of occupant risk, CMB has also often resulted in marginal results for high-speed and high-angle collisions, and these tests are no exception. Criterion E limits vehicle roll, pitch, and yaw, but three of these four tests were marginal because of high roll or yaw. Only the fourth, which was a 15-degree impact against the smooth-faced barrier, resulted in a smooth vehicle trajectory.

Figure 3 compares the results of similar impacts in tests 45 and 47 by using nearly identical vehicles and impact conditions. In test 45 a -64-degree roll resulted on the rough barrier face, which appeared to promote severe wheel climb. On the smooth barrier face in test 47 roll was limited to only -11 degrees. In test 45 the impacting front wheel climbed at a 30-degree angle nearly to the top and then at a flatter angle to the top of the barrier. In test 47 the wheel climb angle was only 22 degrees and ended well below the top of the barrier.

Other possible causes have also been suggested for the difference in vehicle roll between these tests in addition to barrier surface texture. Although in test 45 speed and angles were slightly more severe than those in test 47, this difference would not seem to cause such a large increase in vehicle climb. Differential barrier tipping, which might vary with section length, could also be expected to influence vehicle climb. Close examination of the test films, however, revealed no measurable barrier rotation in the vertical plane in any

Table 4. Comparison of test results to evaluation criteria in NCHRP Report 230.

Evaluation Factor	Test 44	Test 45	Test 46	Test 47
Structural adequacy				
A	Marginal[a]	OK	Marginal[a]	OK
D	OK	OK	OK	OK
Occupant risk				
E	Not good	Marginal	Marginal	OK
F	Not good	Marginal	Marginal	OK
Occupant impact velocity				
Longitudinal	–[b]	OK	–[b]	OK
Lateral	–[b]	OK	–[b]	OK
Ridedown acceleration				
Longitudinal	–[b]	OK	–[b]	OK
Lateral	–[b]	OK	–[b]	OK
Vehicle trajectory				
H	OK	OK	OK	OK

[a]Vehicle was redirected, but trajectory was not smooth.
[b]These evaluation criteria were not evaluated for strength tests.

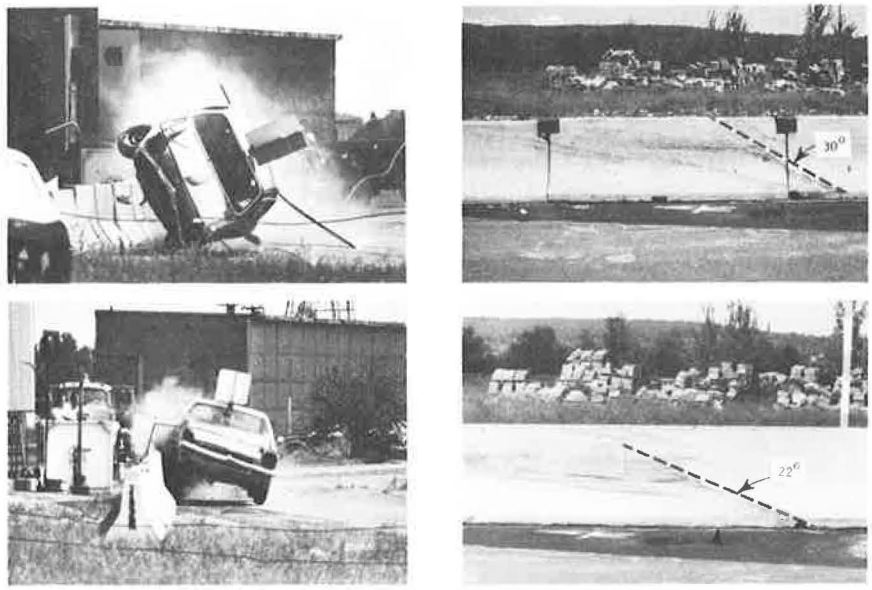

Figure 3. Vehicle roll and wheel climb in test 45, with rough surface texture (above) and test 47 with smooth surface texture (below).

of the four tests. Analysis of the geometry of this joint detail reveals that the maximum possible differential barrier rotation is about 2.5 degrees for this design. Thus, a smooth barrier face is desirable to limit wheel climb and resulting vehicle roll.

In Table 1 all four tests, even with the more severe 25-degree impacts, are within the recommended occupant impact velocities and ridedown decelerations in criterion F. However, lateral 50-msec average decelerations somewhat exceeded the recommended values from Circular 191 (2). For the 25-degree impacts, those criteria are not generally expected to apply because of the increased impact severity. For the 15-degree impacts, however, the values of 6.8 and 7.5 g exceeded the recommended 5.0 g. Although decelerations could be expected to be somewhat lower if impact speeds had not exceeded 60 mph, these tests still point out the severity of impacts with barriers as rigid as portable CMB.

NCHRP vehicle trajectory criteria were generally met by these tests. The vehicles remained close to the barrier after impact, thus satisfying criterion H. Because the vehicles did not intrude into adjacent lanes, criterion I, relating to velocity change and departure angle, does not apply.

Except for the upstream and downstream terminals, none of these barrier sections was connected to the pavement. The in-text table confirms that only a short barrier length was moved laterally (72 ft in the extreme cases), and only 120 ft experienced slight longitudinal movement. Thus, for installations where the design lateral deflections can be tolerated, the data in this table confirm that pinning the barrier to the pavement is not necessary even with 8-ft section lengths.

Based on the results of these full-scale tests, the following findings can be stated.

1. Portable CMB that meet New York's standard design criteria and use 8-ft section lengths provided performance comparable with that of 20-ft lengths.
2. Barrier surface texture should be as smooth as possible to reduce front-tire climb and resulting high roll angles.
3. Portable 8-ft CMB sections using New York's pinned connected joints are an effective positive barrier for impact conditions of 4,500 lb, 60 mph, and 25 degrees, although smooth redirection cannot be ensured for 60-mph, 25-degree impacts, and the vehicle may intrude behind the barrier during redirection in these severe impacts.
4. Lateral barrier deflections for the 8-ft sections were similar to those for the 20-ft sections; therefore, the same design deflections can be used for any section lengths between 8 and 20 ft.
5. Barrier deflection and corner damage were reduced by pulling the joints tight and grouting the lower 6 in. of joint, front and rear.
6. Pinning intermediate barrier sections to the pavement is not necessary unless small lateral deflections are required.

ACKNOWLEDGMENT

This work was conducted in cooperation with the FHWA. The research reported was completed under technical supervision of James E. Bryden, civil engineer III (Physical Research). The full-scale tests were supervised by Kenneth C. Hahn, civil engineer II (Physical Research), and Richard G. Phillips, civil engineer I (Physical Research), assisted by David J. Leininger, Robert P. Murray, James W. Reilly, and Alan W. Rowley, technicians in the Appurtenances and Operations Section. Wilfred J. Deschamps and David R. Kinerson of the Special Projects Section designed and maintained the electronic equipment for these tests. Maintenance personnel from NYSDOT's Schenectady County residency provided assistance in setting the barrier.

REFERENCES

1. K.C. Hahn and J.E. Bryden. Crash Tests of Construction Zone Traffic Barriers. Engineering Research and Development Bureau, New York State Department of Transportation, Albany, Res. Rept. 82, June 1980.
2. Recommended Procedures for Vehicular Crash Testing of Highway Appurtenances. TRB, Transportation Research Circular 191, Feb. 1978, 27 pp.
3. J.D. Michie. Recommended Procedures for the Safety Performance Evaluation of Highway Appurtenances. NCHRP, Rept. 230, March 1981, 42 pp.
4. M.E. Bronstad, L.R. Calcote, and C.E. Kimball, Jr. Concrete Median Barrier Research: Volume 2, Research Report. Southwest Research Institute, San Antonio, Tex., Rept. FHWA-RD-77-4, March 1976.
5. D.L. Ivey, H.E. Ross, Jr., T.J. Hirsch, C.E. Buth, and R.M. Olson. Portable Concrete Median Barriers: Structural Design and Dynamic Performance. TRB, Transportation Research Record 769, 1980, pp. 20-30.
6. M.E. Bronstad and C.E. Kimball. Crash Test Evaluation of a Precast Interlocked Median Barrier. Southwest Research Institute, San Antonio, Tex., Rept. of SwRI Proj. 03-3777-002, Aug. 1974.
7. E.F. Nordlin, et al. Dynamic Tests of a Prestressed Concrete Median Barrier Type 50, Series XXVI. Materials and Research Department, California Division of Highways, Sacramento, Rept. CA-HY-MR-6588-1-73-06, March 1973.

Publication of this paper sponsored by Committee on Safety Appurtenances.

Box-Beam Guardrail Terminal Section

EUGENE L. MARQUIS AND ROBERT T. PETERSON

North Dakota and several other states use the type G3 box-beam roadside barrier with modifications. The box beam has been chosen because of its narrow profile and low resistance to wind forces and the low probability of causing snow and sand drifts. There is no acceptable narrow profile end treatment and the North Dakota State Highway Department was seeking a simple and inexpensive treatment that would eliminate or reduce the probability of a vehicle ramping or rolling, or the rail end from penetrating the vehicle. Full-scale crash testing by the Texas Transportation Institute (TTI) for the North Dakota State Highway Department indicates that an acceptable solution has been developed. A 7 in. x 60 ft long American Standard Channel was used in the design of the end treatment. A 25 ft-6 in. (7.8 m) portion of a channel was twisted with a permanent 90-degree twist so that the web would be vertical at the first post and horizontal at the foundation with the flanges pointing down. This section was pushed to the ground, offset away from the traffic, and attached to a concrete footing centered 24 ft (7.3 m) from the first post. The remaining 34 ft-6 in. (10.5 m) of channel extended downstream to a splice with the standard box beam. The post at the beginning of the length of need was a brittle 6 in. x 6 in. (140- x 140-mm) wood post. All other posts were S3 x 5.7 steel. Beveled blocks were attached to each post holding up the channel. A wire clip was used to hold the rail laterally to the wood post.

Some states have used the box-beam roadside barrier for many years (1). Many of these states are in the northern portion of the United States in hilly and mountainous areas where limited barrier deflections under impact are considered advantageous and where the problem of snow drifts caused by an obstacle in the path of the wind exists. Taking these factors into consideration the North Dakota State Highway Department (NDSHD) therefore elected to develop, with the assistance of the Texas Transportation Institute (TTI), a guardrail terminal for a box beam.

The first attempt was simply to slope down and flare a section of box beam. This method was not successful. NDSHD then selected from several options a terminal whose primary member was a standard rolled steel channel C7 x 9.8. This section is 1 in. (25 mm) deeper than the box beam and easily fits over the box beam. A terminal that is constructed of this rail will meet federal requirements contained in Transportation Research Circular 191 (2).

BOX-BEAM GUARDRAIL TERMINAL SECTION

A North Dakota box-beam terminal section with flared, turned-down end treatment was to be tested. This design varied slightly from the standard in that the three posts originally proposed between the anchor and first full-height post at 24 ft (7.32 m) were removed and the rail was attached to the next seven posts with two 3/8-in. bolts. The rail was installed on S3 x 5.7 posts.

These modifications were made to preclude launching and rollover of the vehicle as a result of longitudinal impacts with the turned-down section. The modifications were partly suggested by tests of rail terminal treatment conducted in 1977 and 1978 (3,4). When this treatment failed to work, it was decided to use a different type of rail for the terminal section instead of the original box beam. Important factors in selecting the rail section for end treatment were the smoothness and depth of the rail, both of which are important factors in reducing the buildup of drifting snow. The final design selected for full-scale testing is shown in Figure 1. Because the W-section had been crash tested successfully, a smooth shallow section with similar structural characteristics was selected for the end treatment, a C7 x 9.8. This channel is slightly weaker in bending about both axes than the W-beam, though more stable. It has more cross-sectional area, which makes it stronger in tension and about 12 times stronger in torsion. The C7 x 9.8 was used to replace the first 58.5 ft (17.8 m) of box beam. From a review of previous testing programs (3,4), the researchers determined that the first post needed to be brittle, and a 6 x 6 in. (140 x 140 mm) treated wood post was chosen. Next it was decided that the second post should be at least 12 ft (3.66 m) from the first post to prevent the second post from tripping an impacting vehicle, as in test 1. The remaining posts were the standard S3 x 5.7. A tapered wood block covered with sheet metal was added to each post supporting the channel rail. The channel was attached only to the first post by a clip, as shown in Figure 1. The connection between the channel and box beam was made to function like a vertical hinge without sacrificing longitudinal strength. The first 18 ft (5.5 m) of box beam also was hinged in its vertical direction to allow the rail to be depressed downward with a small vertical load. The connection to the posts in this first section of box beam was with a 3/16-in. bolt. With these bolts removed the rail will drop down when the turned-down segment is struck by a vehicle and allow the vehicle to pass over the rail for a controlled penetration.

The action of this modified rail terminal is simple. When a vehicle tire or bumper pushes down on the turned-down terminal, the rail will quickly drop from the first eight posts. This allows the vehicle to pass over the rail without the violent ramping effect produced by a rigid turned-down terminal. If the vehicle bumper engages the rail at the length-of-need and pushes it laterally against the backup blocks on the posts, the rail is held at the proper height and the vehicle is redirected. The backup block resists the downward tension force component of the turned-down terminal. The sheet metal covering on the backup blocks is important in that it allows the channel to slip off the block.

CRASH TESTS

Six full-scale crash tests were conducted from July 1979 to June 1980 on modified designs of a box-beam guardrail. The test conditions and results are given in Table 1 and are discussed in detail in the following pages.

A 250-ft (76.2-m) section of standard North Dakota box-beam guardrail was constructed at the TTI Research Center. The site was prepared according to specifications in Transportation Research Circular 191 (2) by digging out the space for the posts and replacing the soil with crushed stone that meets the requirements of Circular 191 for the soil foundation for longitudinal barrier posts. The basic rail was similar to the AASTHO G-3 rail except that the wall thickness was 0.250 in. (6.35 mm) rather than the usual 0.180 in. (4.57 mm).

Test 1 was conducted by using a box-beam drop-down as an extension of a North Dakota standard box-beam guardrail. This test was unsuccessful in that the vehicle was partly redirected, vaulted, and rolled. A detailed review of test 1 led to the final recommended design shown in Figure 1. The principal changes involved changing the first 56 ft

Figure 1. Modified turned down end using standard C-section.

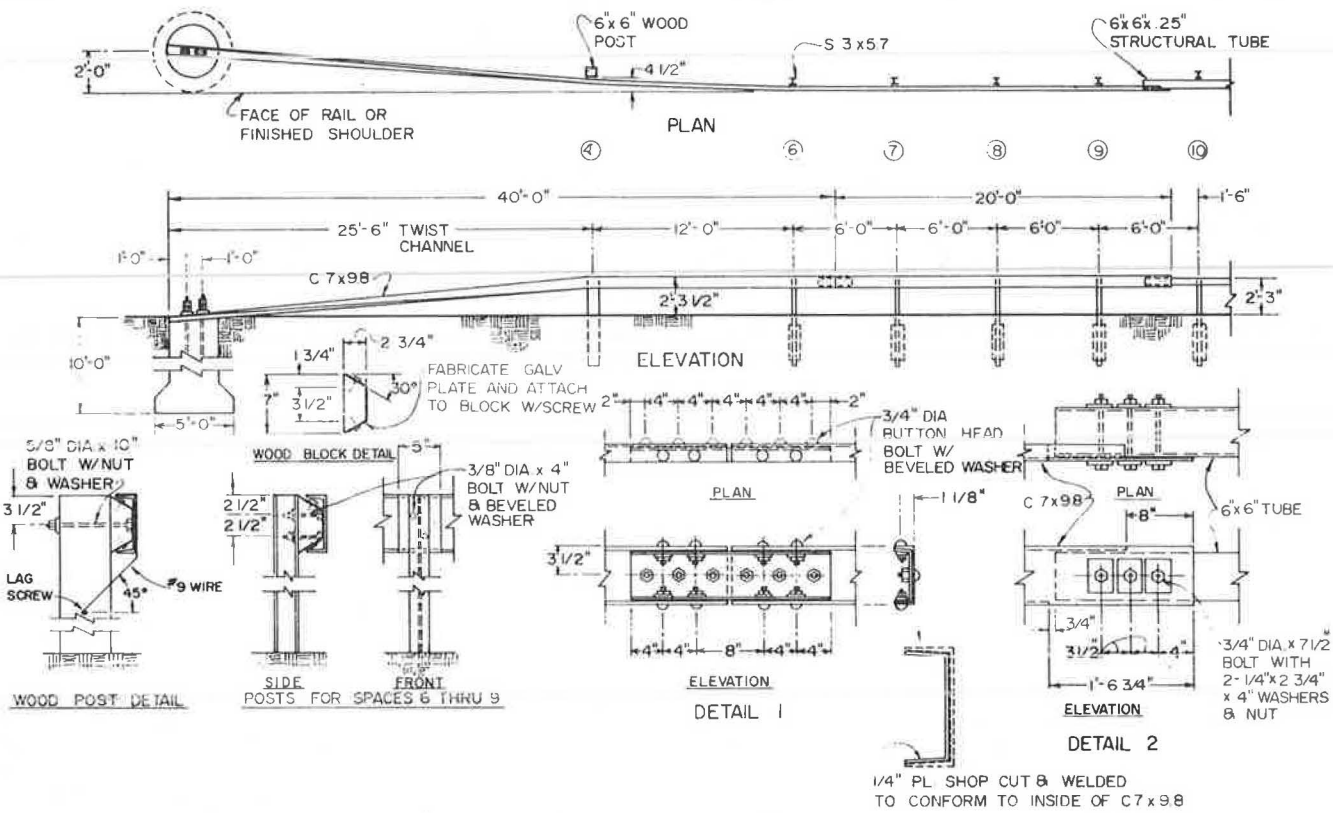

(17.1 m) of rail started at the upstream anchor from box beam to C7 x 9.8 and changing the first post from an S3 x 5.7 steel to a 6 x 6 wood. Crash tests 2, 3, 4, 5, and 6 were conducted on the final recommendation except that tests 2 and 3 were conducted using a welded splice between channel sections and tests 4, 5, and 6 were conducted using the recommended bolted splice. Tests 2, 4, 5, and 6 were successful and verified that the recommended design of Figure 1 will meet the safety evaluation guidelines of Circular 191 (2).

Test 1 was unsuccessful in that the vehicle was redirected, ramped, and rolled over several times, violating the traffic lane. Test 3 was unsuccessful in that the weld at the splice parted, which allowed an unwanted penetration of the guardrail. No data were collected for test 3.

Test 1

The flared and turned-down end was installed at the beginning of the length of need according to North Dakota standards. The two standard 3/8-in. bolts that hold the rail clip to the posts were replaced with one 3/16-in. bolt in each of the first nine posts, and at the same time posts in the turned-down section were removed.

The vehicle used in the test was a 1974 Vega weighing 2,340 lb (1061 kg). The impact velocity was 64.2 mph (103.4 km/h). The impact angle was 16 degrees. The impact point was 12 ft from the end anchor. The impact data are given in Table 1. The 50-msec average for accelerations is within the limits suggested by Circular 191 (2). Subsequent vehicle behavior was not within the limits of criteria.

The vehicle behavior during the test was reviewed by studying the high-speed photography of the test. Within 10 msec after impact, the 3/16-in. bolts that attached the rail to the post had sheared and the rail had started to fall as designed. The front fender in contact with the rail collapsed, the tire compressed, and at approximately 34 msec the vehicle began to redirect. Penetration was not achieved. The bumper, which was higher than the box beam at impact, appeared to be in contact with the rail. As time progressed the rail was falling but also the rail was launching the vehicle. At 239 msec three wheels were off the ground. At 300 msec all four wheels were off the ground. The rail fell to the ground at approximately 0.5 sec. After the vehicle became airborne no additional time displacement data were developed. However, the vehicle rolled, hit on its roof, then cartwheeled to a stop 190 ft (58 m) from the impact point and 20 ft (6.1 m) on the traffic side of the rail. The test was not successful. Pictures of the rail and vehicle after the test are shown in Figures 2 and 3.

Test 2

Before test 2 several changes were made to the guardrail and terminal as a result of the lessons learned in test 1 and testing previously accomplished (3,4) (see Figure 1). Approximately 56 ft (17.1 m) of the box beam from the terminal end to midway between post positions 9 and 10 were replaced with a like length of steel channel C7 x 9.8. The 24 ft (7.32 m) between the terminal end and post position 4 were twisted 90 degrees in the shop before installation. Two sections of the channel were butt welded between posts 6 and 7. The S3 x 5.7 post at position 4 [24 ft (7.32 m) from the terminal] was replaced with a 6- x 6-in. (140- x 140-mm) wood post, and the post at position 5 was removed

Table 1. Summary of crash tests on North Dakota box-beam guardrail terminal section.

Item	Test 1	Test 2	Test 4	Test 5	Test 6
Significant terminal features	Box beam turned in 24 ft, end flared 2 ft, all steel posts, first post 24 ft from terminal	C7 x 9.8 used in lieu of box beam beginning at terminal and extending for 57 ft, vertical hinge installed between channel and box beam and at end of first box beam, first post 24 ft from terminal was 6 x 6 wood, second post 12 ft from wood post was steel I-beam (S3 x 5.7), all remaining posts were S3 x 5.7 at 6 ft, channel was attached to wood post with wire clip			
Impact point	Mid-length of terminal, 15-degree angle	Mid-length of terminal, 15-degree angle	Guardrail length of need, 25-degree angle	End of terminal, head-on	End of terminal, head-on
Vehicle type	Vega	Vega	Plymouth	Vega	Plymouth
Vehicle mass (lb)	2,340	2,360	4,500	2,350	4,500
Film data					
Initial speed (mph)	64.24	56.25	56.05	29.85	61.13
Parallel speed (mph)	61.38	NA, car jumped rail	42.11	NA	NA
Final speed (mph)		44.97	NA	Vehicle stopped on rail	NA
Impact angle (degrees)[a]	16	15.5	28.0	0	0
Departure angle (degrees)[a]		-13.0	Vehicle does not exit	Vehicle does not exit	NA
Vehicle roll angle (max degrees)[a]	720	46.5	7.0	6.5	38.25
Time to parallel (sec)	0.185	NA	0.363	NA	NA
Time to loss of contact (sec)	0.390	0.422	1.237	Vehicle stopped on rail	NA
Dynamic barrier displacement (ft)	6.611	0.491	9.1	NA	NA
Residual barrier displacement (ft)	0.597	-0.256	6.5	NA	NA
Longitudinal distance to parallel (ft)	16.253	NA	30.75	NA	NA
Lateral distance to parallel	3.567	NA	11.28	NA	NA
Accelerometer data (100 Hz 10-pass max flat filter)					
Max avg 0.050-sec deceleration					
Longitudinal (g)	-2.5	-2.4	-2.7	-1.6	-2.35
Lateral (g)	-6.5	-2.7	-4.0	1.39	-2.11
Vertical (g)	2.1	3.6	-1.8	-1.43	2.53
Resultant (g)	6.5	4.2	4.6	2.36	2.97
Deceleration over contact time					
Longitudinal (g)	-0.636	-0.45	-1.47[b]	-0.52[c]	
Lateral (g)	-3.44	-0.30	-2.15[b]	0.19	Not available[d]
Peak deceleration					
Longitudinal (g)	-12.1	-16.1	-17.9	-9.60	-17.49
Lateral (g)	-26.9	22.1	-12.4	-13.25	-10.54
Vertical (g)	11.9	22.5	11.2	13.92	-19.71
Resultant (g)	25.3	26.4	18.7	30.00	21.83
Vehicle damage classification					
Traffic Accident Data Project	2-R&T-4.6	1FR2	11LFQ3	NA	12FD1
Society of Automotive Engineers	2-FDAQ-2	01FREE9	11LDWE3	12UDLW9	12UDLW2
Remarks	Vehicle redirected; rolled over two revolutions	Vehicle rode over terminal; max roll angle, 46.5 degrees	Vehicle redirected smoothly	Vehicle pushed terminal down, bent over 8 posts; stopping safely (left field of view); stopped on rail between post 11 and 13	Vehicle pushed terminal down, bent over 8 posts; traveled 168 ft; jumped off rail, was stopped remotely before impacting downstream barrier
	Test unsuccessful, terminal modified	Test successful	Test successful	Test successful	Test successful

[a]Degrees from rail line. [b]Over 1st 600 ms of contact. [c]Over 1st 0.723 sec of contact. [d]Dust obscured view of vehicle leaving barrier.

Figure 2. Rail after test 1.

Figure 3. Vehicle after test 1.

completely. Details for post 4 and posts 6 through 9 are shown in Figure 1. The box beam was attached to posts 10, 11, and 12 with a 3/16-in. bolt.

The test conditions were similar to those of test 1. A 1974 Vega weighing 2,360 lb (1071 kg) impacted the rail at 56.3 mph (90.6 km/h). The impact was midway between the anchor and the length of need and at an angle of 15.5 degrees with respect to the straight portion of the rail. The vehicle pushed the rail down approximately 0.035 sec after impact, was redirected slightly, and struck and broke the wood post at 0.121 sec. The vehicle then continued across the rail in a straight path without varying until the brakes were applied. The maximum average longitudinal acceleration over 0.050 sec was 2.4 g and the maximum average transverse acceleration was 2.7 g. The performance of this test was considered excellent.

The results of this test are summarized in Table 1. To repair the rail the wood post had to be replaced; all other posts and the rail elements were reusable.

Test 3

The installation for this test was identical to that of test 2. The configuration is shown in Figure 1.

The test consisted of a 1974 Plymouth impacting the rail at the wood post (beginning at the length of need). The vehicle weighed 4,500 lb (2043 kg) and was traveling at 60 mph (96.5 km/h). The impact angle was 25 degrees. The weld splice failed and the vehicle went through the rail. The test was not successful and no data were produced.

Test 4

The installation for test 4 was the same as for tests 2 and 3 except that the welded splice was replaced with a bolted splice.

The test conditions were similar to those in test 3. A 1974 Plymouth weighing 4,500 lb (96.5 kg) impacted the rail at 56.1 mph (90.2 km/h). The point of impact was at the wood post or at the beginning of the length of need. The impact angle was 28 degrees. The rail deflected laterally 9.1 ft (2.77 m) and began to redirect the vehicle as it reached the first metal post at 0.179 sec after impact. The maximum 0.050-sec average longitudinal and transverse accelerations began about this time; they were 2.7 and 4.0 g, respectively. The right rear side of the vehicle came in contact with the rail at 0.350 sec and was parallel at 0.426 sec. The exit angle was approximately 7 degrees and the exit velocity was 42.1 mph (67.8 km/h). Damage to the left front tire and the application of brakes caused the vehicle to yaw to the left and come to a stop 210 ft (64 m) downstream from the point of impact and 15 ft (4.6 m) from the traffic face of the rail. The rail height was maintained throughout the collision and the reduction performance of the rail was considered good.

The results of this test are presented in Table 1. Rail damage is shown in Figure 4.

Test 5

The installation evaluated in test 5 was identical to that of test 4.

The test consisted of a 1974 Vega impacting the terminal head-on with respect to the straight portion of the rail. The vehicle weighed 2,350 lb (1066 kg) and was traveling at a speed of 29.9 mph (48.0 km/h) when impact occurred. The point of impact was the anchor with the vehicle straddling the rail. The vehicle raised slightly just before impacting the wood post, but the wheels did not leave the ground at this point. The rail disengaged from the wood post and then from posts 6 through 13 in

Figure 4. Rail damage after test 4.

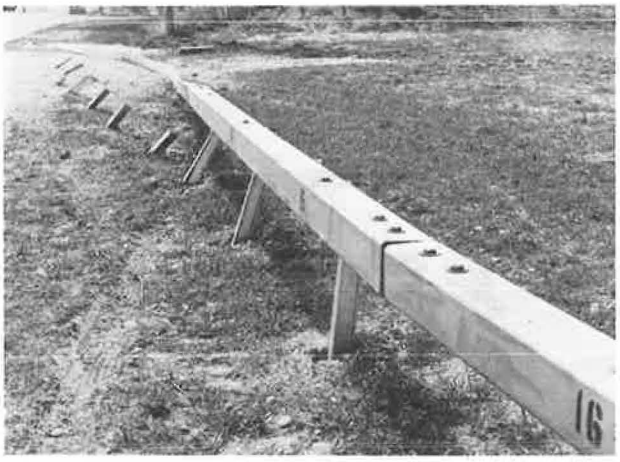

Figure 5. Vehicle and rail after test 5.

Figure 6. Rail after test 6.

Figure 7. Vehicle after test 6.

sequence. The wood post fractured at the ground line and was deflected behind the rail. Posts 5 through 12 were bent out of line. The vehicle came to rest just past post 12 while straddling the rail and resting primarily on the back side of the rail. The maximum vehicle roll angle was 6.5 degrees. Figure 5 shows the vehicle and the rail after the test. The rail was rebuilt by replacing the eight posts and straightening the kink at the splice between the channel and the box beam.

Test 6

The installation evaluated in test 6 was identical to that of tests 4 and 5. The rail from the turned-down anchor to the far terminal was reused. The posts damaged by impact in test 5 and their hardware were replaced in preparation for this test.

The test consisted of a 4,500-lb (2043-kg) Plymouth traveling 61.1 mph (93.4 km/h) impacting the terminal head-on. The point of impact was the anchor with the vehicle straddling the rail. The vehicle rode the rail 168 ft (51 m) before jumping off the rail on the traffic side near post 28.

The vehicle was stable, and the maximum roll angle reached 38.3 degrees. A roll angle of 55 degrees or more is required before this vehicle will roll over. The vehicle did not stop of its own accord or slow down sufficiently, and remote-controlled brakes were applied after the vehicle left the rail and before it was involved in a secondary impact with another test facility +300 ft (90 m) from the point of impact. Had this been a real-life accident then in all probability the engine compression would have acted as a braking force and slowed the vehicle to a reasonable speed before it reached the end of the rail installation. The maximum 50-msec deceleration was 2.97 g. Figure 6 shows the rail after the test. Figure 7 shows the vehicle after remote-controlled brakes were applied after the test.

SUMMARY AND CONCLUSIONS

North Dakota has unique problems with snow drifting against and dynamic deflection of roadside barriers. The W-section barriers G-2 and G-4 (1) both cause snow drifts across travelways that are hazardous to the traveling public. Also, a large portion of the roadside barrier installations are in locations that would make large lateral deflection of the G-1 cable barrier (1) inappropriate. Therefore, NDSHD elected to use a modified G-3 box-beam barrier (1). The North Dakota standard varies from the G-3 in that the box-beam tube thickness is 0.250 in. (6.35 mm) in lieu of the standard 0.180 in. (4.57 mm) and the support angles are attached to the posts by two 3/8-in. bolts. Testing by North Dakota has shown that the snow drifting characteristics exhibited by the box beam are reasonable and satisfactory, particularly when compared with those exhibited by the deeper W-beam rail systems. Also, the state can design within the expected dynamic deflection characteristics of the box beam whereas the deflection of the cable system would be excessive. There are no existing standard designs for end treatment or rail termination that will meet the requirements as established by the state. NDSHD embarked on a design-test program to develop a suitable end treatment.

The final design uses a 6- x 6-in. (140- x 140-mm) wood post 24 ft (7.3 m) from the anchor. The next post is spaced at 12 ft (3.66 m), and all remaining posts are spaced at 6 ft (1.83 m). The end treatment and next 30 ft (9.14 m), for a total of 54 ft (16.46 m), of rail were replaced by a C7 x 9.8 rolled section of A36 steel. The channel is held to the wood post by a no. 9 wire clip. There is no positive attachment of the channel to the steel posts. The box beam is attached to the first three posts by 3/16-in. bolts and thereafter by two 3/8-in. bolts. The length of need begins at the wood post.

Successful crash tests as recommended by Transportation Research Circular 191 (2) have been conducted to verify the satisfactory behavior of the modified rail. The vehicle impacted the midpoint of the modified terminal, depressed the rail, and rode over the rail without vehicle roll over. When the guardrail and terminal were impacted at 1 ft (0.3 m) downstream of the length of need, the 4,500-lb (2040-kg) vehicle was redirected smoothly as required.

In the head-on test at 61.13 mph (98.38 km/h) the vehicle remained astraddle the rail for 168 ft (51 m) before it jumped off and in front of the rail. Highway engineers should keep this in mind when using this installation with rails tied to bridge piers or other rigid objects.

ACKNOWLEDGMENT

This paper is the result of a testing program conducted by the Texas Transportation Institute and the

North Dakota State Highway Department, Robert T. Peterson, Research Director, in cooperation with FHWA.

REFERENCES

1. AASHTO Guide for Selecting, Locating, and Designing Traffic Barriers. AASHTO, Washington, D.C., 1977.
2. Recommended Procedures for Vehicle Crash Testing of Highway Appurtenances. TRB, Transportation Research Circular 191, Feb. 1978, 27 pp.
3. C.E. Buth and T.J. Hirsch. Improved End Treatment for Metal Beam Guardrail. Texas Transportation Institute, Texas A&M Univ., College Station, Res. Rept. 189-1, May 1977.
4. T.J. Hirsch and T.J. Dolf. Maryland Turned-Down Guardrail Terminal. Texas Transportation Institute, Texas A&M Univ., College Station, Final Rept., May 1980.

Publication of this paper sponsored by Committee on Safety Appurtenances.

Development of Safer Utility Poles

J.J. LABRA, C.E. KIMBALL, JR., AND C.F. McDEVITT

This paper is based on a FHWA-sponsored research program to develop a breakaway retrofit concept for roadside timber utility poles. Southwest Research Institute's efforts to achieve this goal are described. The research included analytical (simulations) as well as experimental efforts. The experimental efforts involved static bending tests, pendulum tests, and full-scale tests of poles with subcompact automobiles. A slip-base concept, called Slipbase, is recommended for implementation along roadsides. Slipbase is capable of reducing significantly the inherent roadside hazards associated with in situ timber utility poles while maintaining a high level of wind-ice resistant bending strength. The slipbase concept cannot be applied universally at this time because no tests have been conducted on poles that carry multicircuit electric lines or on poles that carry joint electric and telephone lines.

Timber poles are not designed to be breakaway structures. Figures 1 and 2 illustrate the result of subcompact cars colliding at 49 km/h (30 mph) and 97 km/h (60 mph) with such poles. In both cases the vehicles sustained substantial damage, but damage to the pole was not appreciable. Accident statistics reveal the frequency and severity of this type of collision. According to the National Highway Traffic Safety Administration (1)

1. More than 4,400 fatal accidents involving utility poles occurred between 1975 and 1977 and
2. More than 8,300 people died in these accidents.

Further, Texas accident files show an injury-to-fatality ratio of 45 to 1 involving this type of accident. If this ratio represents a nationwide average, then an estimated 373,500 injuries involving utility poles occurred between 1975 and 1977 (125,000 injuries per year).

Southwest Research Institute (SwRI) has been investigating the problem of vehicle collisions with utility poles for several years. In an earlier study (2) SwRI investigated the feasibility of developing retrofit designs for in situ timber poles. The objective of the study was to develop an inexpensive retrofit concept that would enable currently nonfrangible poles to break away. The retrofit design was to satisfy the following criteria:

1. Breakaway of pole and acceptable momentum change of vehicle on impact,
2. Sufficient structural integrity of pole to withstand ice- and wind-induced loads,

Figure 1. Unmodified pole crash test at 49 km/h.

Figure 2. Aftermath of 97 km/h impact.

3. Minimization of postbreakaway hazards because of service line rupture or segmented pole trajectory, and
4. Low implementation costs (i.e., labor and materials).

The goal of this study was to achieve a repeatable, nondirection-sensitive pole breakaway when struck by a 1021-kg (2,250-lb) subcompact car at 32 and 96 km/h (20 and 60 mph) by using breakaway criteria from Transportation Research Circular 191 (3). Guidelines from the Circular allow vehicle momentum change of 4893 N-sec (1,100 lb-sec). The environmental criteria involved minimizing the reduction in pole bending strength that results from the retrofit concept. Service lines are attached to utility poles; therefore, breakaway effects on these lines were also considered. Further, because of the substantial number of roadside timber poles, the material and labor costs associated with each retrofit design were weighed carefully.

The research approach was to modify the pole near ground level in a manner that would weaken the shear strength substantially but affect flexural strength less dramatically. Analytical and experimental evaluations were made for more than 20 retrofit designs. Designs included various configurations of bore holes, slots, and shims in combination with various attachments. Their course of evaluation was typically:

1. Computer simulations,
2. Environmental (static bending) tests,
3. Pendulum tests, and
4. Full-scale vehicle tests.

BACKGROUND

A detailed state-of-the-art review of applicable literature was performed to obtain a thorough understanding of the vehicle-utility pole impact phenomenon. Areas included in this review are

1. Types and classes of utility poles,
2. Available vehicle-pole crash statistics,
3. Vehicle-pole impact considerations,
4. Postimpact hazards of breakaway pole, and
5. Environmental factors.

Types and Classes of Utility Poles

An investigation was performed of the existing array of timber utility poles through a literature search and contacts with telephone and power utility companies as well as with pole suppliers and treaters. The ranges of pole geometries and characteristics had to be identified to establish the more representative retrofit candidates. The breakaway concept could then be directed to perform with these representative poles. For nonrepresentative poles the concept could be modified (if necessary) to obtain acceptable performance.

Utility companies were requested to furnish information on the following:

1. Class and length of poles used,
2. Type of wood and preservative,
3. Typical crossarm configurations,
4. Distance between poles, and
5. Design criteria.

In general, the utility companies surveyed conformed to the heavy loading specifications of the National Electrical Safety Code; that is, a transverse load of 192-Pa (4-lb/ft^2) wind on a projected area covered with 12.7-mm (0.5-in.) radial ice and a vertical load of equipment and wire weights with superimposed loads of 12.7-mm (0.5-in.) radial ice on wires, cables, and messengers. For transverse strength calculations the transverse and vertical loads are assumed to be acting simultaneously. Whereas, for longitudinal strength calculations, the assumed longitudinal loads that result from conductor pull imbalance are taken without consideration of the vertical or transverse loads.

According to the utility companies surveyed more than 70 percent of the poles in use are 12 m (40 ft) long or less in class 4 or 5. Southern pine is the most typical wood used (75.5 percent of total), and creosote preservative is the most predominant treatment (53.9 percent of total). Therefore, class 4 and 5 poles 11 to 14 m (35 to 45 ft) long made of creosote-treated Southern pine were recommended and accepted by FHWA as candidate models for retrofit modifications and testing in the study.

Available Vehicle-Pole Crash Statistics

Limited data collected by state and federal agencies indicate that utility poles constitute one of the major roadside hazards on U.S. highways. Specifically, utility pole accidents are estimated to account for more than 5 percent of all national traffic fatalities and more than 15 percent of all fixed-object traffic fatalities (4, p. 36). This amounts to an estimated 2,750 fatalities annually.

The figures for estimated injuries are just as dramatic. Accident data derived from state summaries (4, p. 36) show that approximately 5 percent of all accident injuries and 22 percent of all injuries sustained from fixed-object impacts involved vehicle collisions with utility poles. This correlates with an estimated 110,000 injuries annually that result from utility pole accidents. In addition, an estimated 250,000 utility pole accidents involve property damage only each year.

Although the preceding data are based on contacts with a limited number of states (Kansas, Massachusetts, Michigan, Oklahoma, and Pennsylvania), these data are evidence that utility poles are involved in a significant number of accidents that involve fatalities, injuries, and property damage. Published statistics generally do not convey the extent of this kind of accident because of the lack of established and uniform vehicle accident reporting procedures for secondary and urban roads. Recently, however, various states have indicated a willingness to share their accident data to help define and

solve the utility pole problem (4, p. 36). (Excellent accident records compiled for the U.S. Interstate system cannot be considered representative of vehicle collisions with utility poles because such poles are generally not found on the rights-of-way of these highways.)

Vehicle-Pole Impact Considerations

Roadside Environment

The location of the utility pole with respect to the pavement edge affects the probability of vehicle-utility pole accidents occurring. Research by Skeels (5) concludes that, if a 9-m (30-ft) wide zone adjacent to the roadside is cleared of all fixed objects, motorists involved in approximately 80 percent of single vehicle run-off-the-road incidents could regain control of the errant vehicle and avoid an accident. The placement of utility poles 9 m (30 ft) from the roadside is not always feasible. Therefore, if it is not possible to prevent the probability of vehicle-utility pole impacts, other means are needed to reduce the severity of impact and the probability of injury to the occupants. If the occurrence of a collision is assumed, one of the following approaches is warranted:

1. Modify the utility pole structurally so that it will safely break away on impact by the errant vehicle,
2. Redirect or arrest the vehicle before impact with the pole,
3. Take other countermeasures such as burying the cables or relocating the pole line, or
4. Leave the pole and surroundings unchanged.

The strategy used to determine which approach is optimum with respect to safety and cost is based, in part, on the probable impact speed of the vehicle and the size and location of the pole. For example, Michie and Bronstad (6) recommend barrier shielding for wood poles or posts that have a cross section area greater than 323 cm^2 (50 $in.^2$). Accordingly, no modification was recommended for poles less than 203 mm (8 in.) in diameter because they were expected to break away during most vehicle impacts and the vehicle was expected to sustain only minimum damage. [Note that study results indicate that the 323-cm^2 value is excessive. Nonbreakaway occurred with cross section areas greater than 194 cm^2 (30 $in.^2$).] The pole should be small and light to minimize the danger of fallen wires (especially electrical). For larger poles that are impacted by vehicles at low speeds, small crash cushions may offer more economically attractive alternatives for reducing the severity of impact. Conversely, where the potential of a high-speed impact is great, the most suitable approach may be to modify the utility pole structurally. In essence, before a decision is made about whether to modify the pole or the surroundings the effect a severed pole would have on its environment, including cables, adjacent poles, and pedestrians, must be considered.

Dynamic Interaction of Vehicle and Pole

The dynamic interaction between a vehicle and a utility pole on impact is dependent on numerous variables, such as vehicle size, weight, and crush characteristics; impact velocity; and the geometry and strength characteristics of the pole, as well as any built-in failure mechanism. Basically, this dynamic response can be considered in three phases:

1. Deformation of the vehicle sheet metal before failure of the utility pole,
2. Failure of the pole (at base) through built-in failure mechanism (pole slip or fracture mechanism), and
3. Acceleration of segmented pole structure by impacting vehicle.

During the first phase of this vehicle-utility pole interaction the pertinent variables are impact speed, vehicle weight, and vehicle crush characteristics. These variables are the major factors that affect change in momentum of the impacting vehicle during this phase. (The highway community considers change in vehicle momentum and the change in velocity as the prime factors for estimating impact severity.)

The second phase of the collision involves failure of the pole through a built-in breakaway mechanism. Such a mechanism should reduce the amount of energy required to fracture the pole in a plane near the point of vehicle bumper impact. Because bending is the primary stress at the base of the pole that results from environmental loads, and shearing is the primary mechanism during vehicular impact, the best breakaway configuration is one that will weaken the pole's shear strength without affecting its bending strength significantly. This approach has been used effectively for metal signs and luminaire supports, especially on the Interstate systems. In these cases the principal breakaway mechanisms are

1. Slip joints that depend principally on friction forces developed by the clamping action of bolts torqued to design values to effect the failure mechanisms, and
2. Frangible bases (usually cast aluminum) that fracture on impact.

In a previous study (2) the approach to weaken a pole's shear strength without greatly affecting its bending strength was applied to utility poles by drilling holes or notches in the base of the pole to affect the weakened plane.

Note that during this second impact phase the response of the utility pole may differ substantially from that of signs and light supports. For example, utility poles are connected to adjacent poles by means of service lines and, in certain locations, are restrained by guy lines. The physical constraints imposed by the wires must be considered pertinent factors as well as the inertial constraints of the heavy upper portion of the utility pole.

Finally, during the third impact phase of the vehicle-utility pole interaction, the bottom portion of the pole is accelerated away from the vehicle. If a failure mechanism for the top of the pole has been included in the breakaway design, during this phase the upper portion of the pole and the crossarm-upper pole assembly are separated. The important variables here include upper pole constraints, failure mechanisms (if any), pole moment of inertia, pole mass, and the location of the pole segment center of gravity (c.g.). These variables all contribute to the overall change in vehicle momentum and, hence, the severity of impact.

In summary, the pertinent variables involved with vehicle-utility pole impacts can be categorized according to those related to the vehicle and those related to the pole:

1. Vehicle--Mass, impact velocity, sheet metal crush characteristics, and bumper height (vehicle geometry).

2. Pole--Base breakaway fracture energy (BFE); upper-pole assembly BFE, if any; upper-pole assembly constraints; and mass, c.g. location, and rotational inertia properties.

Postimpact Hazards of Breakaway Timber Pole

In many ways hazards in vehicle-utility pole accidents are analogous to those associated with similar structures. For example, the danger exists that the segmented portion of a timber pole or luminaire will fall on the impacting vehicle or adjacent traffic. Accordingly, the design criteria for structures such as luminaires and sign supports are

1. To break or disengage the structure during vehicular impact without producing hazardous forces in the vehicle, and
2. For segmented parts or elements not to present a hazard to the vehicle occupants or other traffic.

The trajectory hazard of a fractured pole segment may be greater for timber poles, however, because they typically are heavier than metal luminaire and sign supports. Should the pole fall on an impacting vehicle or adjacent traffic, it could cause substantial damage to a vehicle and severe injury to occupants.

Furthermore, unlike luminaires and sign supports, the breakaway timber pole presents the unique problem of cable failure and resulting electrical hazard. During a collision falling live wires would endanger occupants of the vehicle involved, adjacent traffic, and pedestrians. The interruption of power or communications may have a dramatic and adverse effect on a large segment of the population (e.g., the temporary loss of power to a nearby hospital), whereas temporary loss of sign or luminaire support has only a minor effect on public convenience and safety. Hence, care must be taken in the design of any type of breakaway utility pole to ensure the integrity of the service lines and adjacent timber poles.

Figure 3. Storm loading map of United States.

Environmental Factors

In determining the applicability of a potential timber pole breakaway concept its effect on the pole's ability to withstand environmental loadings must be considered. In connection with the preparation of the National Electric Safety Code (N.E.S. code), National Bureau of Standards Handbook H32 (7), studies were made to determine the frequency, severity, and effects of ice and wind storms throughout the country. On the basis of these studies three general areas were distinguished as heavy, medium, and light environmental loading areas in the United States [see Figure 3 (7)]. Basic conductor loadings have been assigned for the three areas to derive pole loadings considered appropriate for these areas and to arrive at the class of pole required for any given line.

This problem of defining typical environmental loads can be reduced somewhat by considering that

Figure 4. Service line dynamic tests.

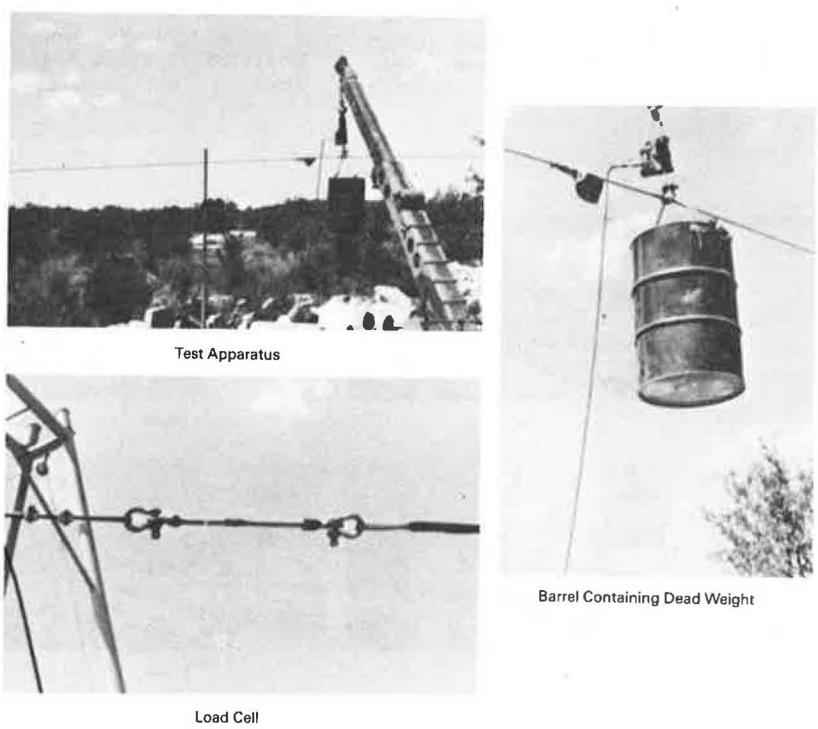

utility companies prefer classes 2, 3, and 4 poles, and telephone companies use more class 4 and 5 poles. At least 80 percent of the telephone company poles are used jointly with utility companies; therefore, class 4 is the most common group. The length most often specified is 12 m (40 ft), and approximately 72 percent of all poles are equal to or less than 12 m (40 ft). In addition, although conductor span lengths range up to 366 m (1,200 ft), most lengths are in the 41- to 91-m (135- to 300-ft) range.

EXPERIMENTAL TESTS

A major portion of the study involved the experimental evaluation of the postimpact performance of vehicle, timber pole, and supporting service lines. In addition, the environmental effect of conceptual retrofit designs on the pole's ability to withstand service wind and ice loadings was considered.

Service Line Dynamic Tests

The postimpact response of service lines after the occurrence of a successful pole breakaway was evaluated to determine the capacity of the service lines to support their own weight as well as any remaining upper pole segment (e.g., crossarm assembly) after impact. SwRI set up a simple test system similar to that shown in Figure 4 to simulate the postimpact response. A suspended center mass represented the upper portion of the utility pole after the lower portion of the pole had broken away. Drop tests were performed using 45.4- and 90.7-kg (100- and 200-lb) weights. Single service lines varying from 8 to 17 mm (0.3 to 0.7 in.) in diameter were tested dynamically by releasing the test mass from a designated height.

The pertinent findings from these drop tests included quantification of the impulse duration that occurred in the service line after the mass had dropped and line slack was eliminated. Clearly, if the dynamic response of the service line was impulsive before testing, then the potential of line rupture or of a pole domino effect would be high; however, the test results in each case demonstrated impulse durations much greater than a full second. These long durations were due to the inherent design associated with stranded cable. In each test, well before the cable reached its ultimate load-carrying capacity, its individual strands stretched. This was evident after each test when the mass was returned to its original position and a notable increase in service line sag was recorded.

Environmental Static Tests

To estimate residual bending strength of retrofitted timber poles, a cantilevering apparatus was constructed (Figure 5). This apparatus consisted of a collar that encompassed each specimen 1.8 m (6 ft) from the base of the pole and behaved as a fixity. A crane with a wire rope and load cell was attached near the free end of a cantilevered specimen. During testing the crane would lift vertically the free end of the horizontally placed pole until the specimen fractured. A Visicorder oscillograph recorded the load magnitudes during the loading of the pole.

More than 160 environmental tests were performed on modified and unmodified poles. Each test imposed bending loads on 40 class 4 and 5 poles using the strength characteristics of unmodified poles as base data. Typically, unmodified poles fractured at load levels 180 percent of design--the latter based on the methodology by Pender and McIlwain (8).

Pendulum Tests

The general procedure for these tests was to subject a timber pole specimen to the type of loading induced when a pole is struck by a 1021-kg (2,250-lb) subcompact car at 32 km/h (20 mph). For the initial testing a facility was designed that consisted of a pendulum, operating equipment, and test control and data collection instrumentation. A 1021-kg (2,250-lb) mass with a crushable honeycomb nose (Figure 6) was suspended so that it remained horizontal throughout the normal swing arc [7.3-m (24-ft) radius]. Each timber specimen was located at the lowest point of the pendulum arc. A damp, uniformly graded sand was tamped about the pole base.

During each test signals from an accelerometer mounted at the rear of the mass were recorded continuously by a high-speed magnetic tape recorder. These signals were later converted from analog to digital data for subsequent processing by a digital computer.

More than 50 pendulum tests were performed on modified 40 class 4 and 45 class 5 poles in an effort to define acceptable breakaway performance

Figure 5. Typical environmental static test.

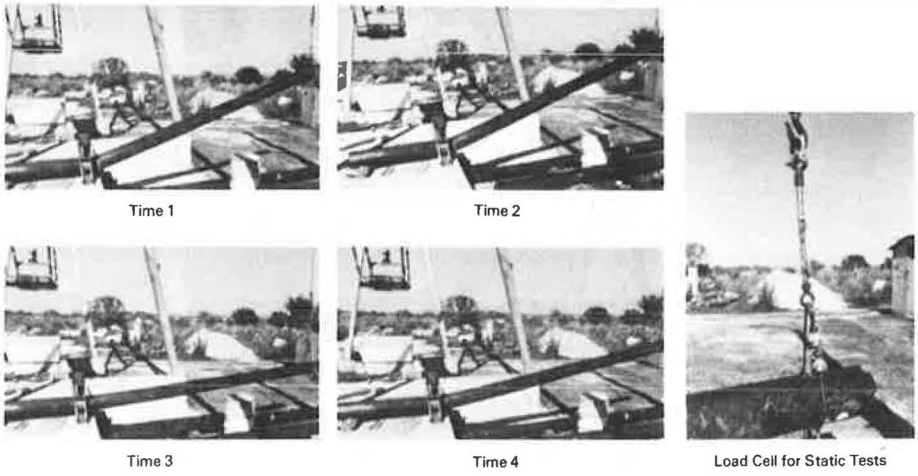

Figure 6. Pendulum test apparatus.

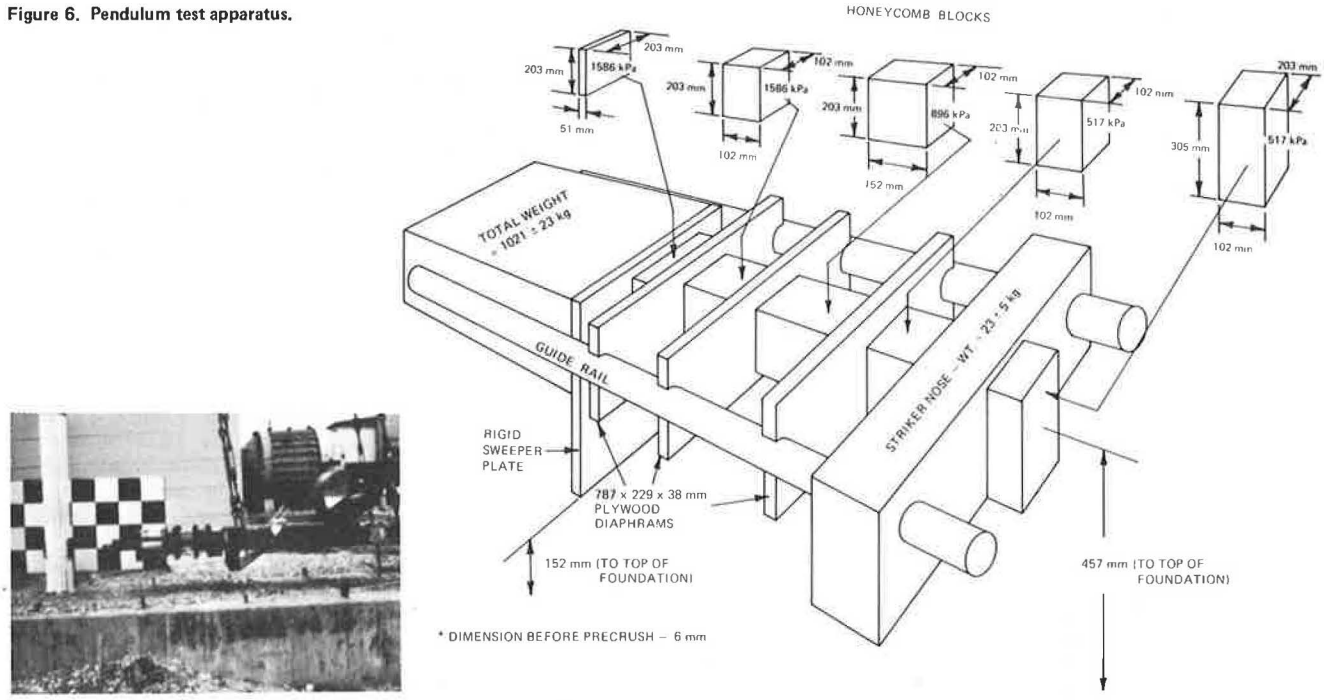

Figure 7. Slipbase design.

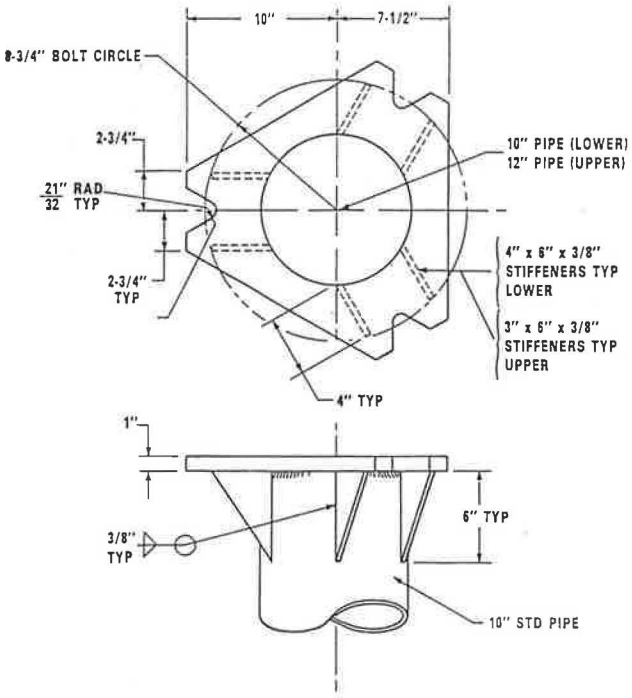

based on the 4893 N•s (1,100 lb-sec) momentum criterion for a 32-km/h (20-mph) impact. In general, concepts other than the Slipbase were deemed marginal or unacceptable either because of pendulum test results or because the corresponding environmental static tests demonstrated low residual bending strength for poles modified with the conceptual retrofit design under consideration.

Full-Scale Tests

Poles were modified by SwRI personnel before setup for the full-scale tests. Service lines were attached to poles either by SwRI or local utility company personnel. In all tests the insulator tie wraps consisted of standard aluminum wire typically used by utilities.

After a conceptual retrofit design had performed successfully during extensive environmental and pendulum tests, the final testing was conducted, which involved full-scale crash tests with subcompact vehicles. Impact events were documented by high-speed photography and vehicle instrumentation. Data from these carefully controlled experiments were then analyzed. The procedures and test conditions were based on guidelines suggested by Bronstad and Michie (9).

RECOMMENDED RETROFIT CONCEPT

Figure 7 illustrates the timber pole retrofit concept (Slipbase) that SwRI considers implementable. Specifically, although material and implementation costs may be high, Slipbase technically complies best with vehicle impact safety criteria. Furthermore, it affects near total bending strength analogous to the unmodified pole.

This concept is based on extensive environmental, pendulum, and full-scale tests performed at SwRI on approximately 20 different conceptual designs. It includes SwRI's effort during a 5-year period.

Slipbase

The retrofitting of in situ timber poles with Slipbase involves segmenting the pole at ground line and placing a 457-mm (18-in.) long cylindrical sleeve (Figure 7) on the exposed end of the embedded stub as well as at the base of the upper timber segment. The lower sleeve typically has a smaller inner diameter (ID) so that it may be press-fit onto the stub. A minimal ground line diameter of 271 mm (10.66 in.) for 40 class 4 poles led SwRI to use as a lower sleeve prototype steel pipes that have IDs of 267 mm and 279 mm (10.5 and 11.0 in.). A family of sleeve sizes could be made available, however, for the wide range of pole sizes.

A 305-mm (12-in.) ID was used for the upper sleeve so that the segmented pole base could slip into place easily. The void between pole and sleeve is then filled with a high compressive strength mortar compound. SwRI used Polegard, manufactured by Monolith Systems, Inc., in the study and an off-the-shelf shear-wall compound.

The upper and lower sleeves are connected through the use of 32-mm (1.25-in.) diameter (slip) bolts that are pretensioned to a 339-N-m (250-ft-lb) bolt torque. A keeper plate is used to prevent the bolts from working loose under typical environmental conditions.

Figure 8. Modifications to upper pole.

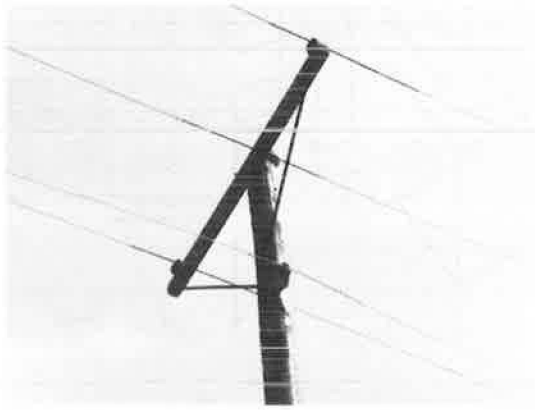

Redirectional rods

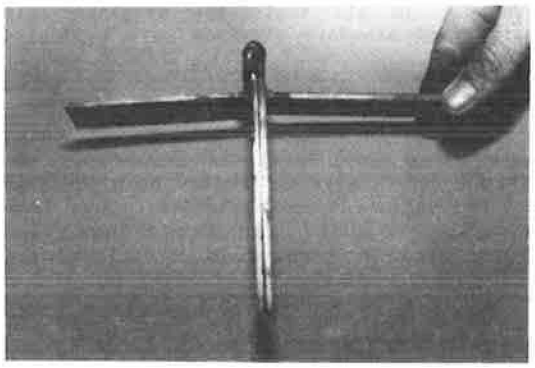

Crossarm Release Mechanism

Slipbase addresses the base of the pole. Once breakaway occurs at the base of the pole and the pole begins to fall the danger of service line rupture must be minimized. Laboratory tests of service lines, as well as pendulum tests, demonstrated that the potential of service line rupture is small because a typical cable is elastic. Further, in SwRI full-scale tests, the aluminum ties used to attach service lines to conductors stripped away as projection of the segmented pole occurred. Because of these findings attention was focused on preventing service line rupture caused by crossarm snagging as the segmented pole rotates away from the vehicle and drops. When multiple crossarms exist redirectional rods used as struts (illustrated in Figure 8) will reduce the potential of service line failure due to snagging on lower crossarms. An additional device that segments the crossarms when the pole is struck by an errant vehicle is the crossarm release mechanism (CRM) shown in Figure 8.

The crossarm release mechanism consists of two sets of a male and female component for each crossarm. A typical crossarm is cut into three parts. The cuts are made adjacent to the infield location of the supporting struts. A female component is attached to each outer crossarm segment and two corresponding male components are attached to the center segment (which is fixed to the pole). On pole breakaway the mass of the segmented pole will result in the pole dropping along with the center crossarm segment. The outer two crossarm segments will remain attached to service lines. Before breakaway the weight of the supported service lines should be sufficient to prevent the male and female elements of the CRM from separating accidentally. The CRM is designed to effect an articulated crossarm during collapse of the pole because of vehicle impact. The potential of service line rupture from crossarm snagging is reduced when the infield crossarms are replaced with units that have these devices. The CRM would also minimize potential of multiple (adjacent) pole failures during a severe storm if the residual strength of a retrofit pole was exceeded.

Notably, the CRM does not address the potential danger associated with a segmented pole landing on the errant vehicle or in the adjacent traffic flow. To minimize this potential hazard a significant volume of wood mass may have to be removed (e.g., a

Table 1. Summary of static tests.

Test No.	Type	Base Circumference (mm)	Design Load[a] (kn-m)	Load Direction	Failure Load (kn-m)	Percentage of Design	Percentage of Minimum 4-40[b] Design	Percentage of Estimate Unmodified[c]	Comments
SB-1	40, Class 4	851	53.8	Wind-ice	119.0[d]	221	221	115	Timber pole slip base (Slipbase) concept; 339 N-m bolt torque; failure below lower collar
SB-2	40, Class 4	851	53.8	Wind-ice	115.2[d]	214	214	111	Same as SB-1 except 254 mm (ID) lower pipe collar replaced with 304.8 mm (ID) pipe and clearance filled with Polecard material[e]
SB-3	40, Class 4	851	53.8	Wind-ice	95.1	177	177	92	Same as SB-1 except 270 mm (ID) lower pipe collar

[a] Based on Pender and McIlwain (8) using a 27.6 MPa design stress.
[b] Design load for 851-mm base circumference is 53.8 kn-m.
[c] Using 53 MPa (7.7 ksi) as ultimate stress—based on earlier SwRI static tests for new poles.
[d] Equivalent load at slip base interface 1.8 m from butt end.
[e] Silicone-base mortar manufactured by Monolith Systems, Inc., New Britain, Conn.

4.0- to 5.0-m breakaway aluminum sleeve replacing a similar length of pole above grade). The material and implementation cost could also, however, be prohibitive in terms of a feasible retrofit concept. Further, the potential trajectory hazard is considered a small and, hence, an acceptable risk in comparison with the well-defined significant hazard associated with roadside nonbreakaway timber utility poles. In all of the 15 full-scale tests performed at SwRI involving breakaway conceptual designs, in only one instance (test FS-13A) did the segmented pole strike the vehicle in a manner that might cause an injury as a direct result of the falling segmented pole.

Environmental Tests

Modification of a timber pole to break away readily on impact inevitably weakens the pole. Yet the pole must be strong enough to withstand severe climatic effects. Environmental static tests were performed on both modified and unmodified timber poles to address this problem.

Baseline static bending tests of unmodified poles resulted in an average failure load of 180 percent of design; the design load for a timber pole is based on the methodology of Pender and McIlwain (8). In these baseline tests, however, failure loads due to pole imperfections (i.e., man-made or natural flaws) were recorded as low as 64 percent of the estimated unmodified pole strength.

Before the development of Slipbase 145 environmental static tests were performed on various potential designs. Three static tests were performed using the slip base retrofit design. As the data given in Table 1 indicate, the failure loads were all high in comparison with the estimated unmodified pole bending strength. The second test, SB-2, did not demonstrate a discernible difference in ultimate bending strength when the press-fit approach with the small, i.e., lower, sleeve was replaced with an oversized version and the void was filled with the silicone compound Polegard. Further, in all three tests the eventual timber fracture occurred below the lower sleeve.

Pendulum Tests

Fifty-seven pendulum tests were performed on various conceptual designs during this study.

A single pendulum test with the Slipbase design was performed (test SB-1) and resulted in satisfactory results. The results of test SB-1 are as follows:

Pole type--40 class 4,
Base circumference--842 mm,
Mass weight--1021 kg,
Impact velocity--8.9 m/sec,
Change in velocity--3.8 m/sec,
Impulse--3896 N-sec,
Duration--77 m/sec,
Peak acceleration--13.3 g, and
Honeycomb crush--376 mm.

This test used the timber pole slip base concept (Slipbase). The impact mass momentum change was greater than the optimum 3336 N-sec (750 lb-sec) criterion, but well below the required 4893 N-sec (1,100 lb-sec) criterion.

Full-Scale Tests

Five full-scale tests were performed using the retrofit concept Slipbase. In each test a late model (1974) subcompact car was used. Tests FS-9 and 10 involved 32-km/h (20-mph) and 97-km/h (60-mph) collisions. Test FS-12 was performed at 48 km/h (30 mph). In each of these tests upper pole redirectional rods or a CRM were used. Tests 13-A and 13-B were performed at 48 km/h and involved vehicle-pole off-center impacts.

FS-9

In the first crash test with the Slipbase-modified 40 class 4 pole, test FS-9, the 32-km/h (20-mph) impact caused a change in vehicle momentum of 5107 N-sec (1,148 lb-sec). This was acceptable and the damage to the vehicle's front end was minor (Figure 9). Unfortunately, after impact at this low speed the segmented pole did not rotate clear of the car and caused extensive damage to the roof (Figure 9).

FS-10

Test FS-10 involved a 97-km/h (60-mph) collision with the subcompact car into a modified 40 class 4 pole. A resulting change in vehicle momentum of 6067 N-sec (1,364 lb-sec) was greater than the Transportation Research Circular 191 criterion (3) because of the inertia effects of the slip base sleeve and the weight of the segmented timber pole. As shown in Figure 10, breakaway occurred readily; however, the segmented pole rotated over the car.

FS-12

Test FS-12 was performed at 48 km/h (30 mph) to observe if at this speed the segmented pole would rotate clear of the vehicle. The segmented portion of the pole did not land on the car (Figure 11); however, this was because the pole fell to the left side of the vehicle and not because the pole segment rotated over the vehicle. As anticipated, the change in vehicle momentum was considered acceptable at 5173 N-sec (1,163 lb-sec).

FS-13 A and B

The previous crash tests with the Slipbase concept demonstrated that whether the pole falls onto the car at speeds of 48 km/h or less is problematic and a function of vehicle size, speed, and location of the front-end impact. To verify this aspect test 13A was proposed as a vehicle-pole off-center collision. Unfortunately, during pole breakaway the vehicle veered to the right because of an impact eccentricity of 387 mm (15.25 in.) and struck the rear of an adjacent guardrail (Figure 12). Accordingly, although the segmented pole fell onto the vehicle and caused extensive damage, a repeat test was warranted.

Test 13B was performed at 48 km/h after the adjacent guardrail was removed. As with test 13A, an off-center impact [432-mm (17-in.) eccentricity] was imposed. In this instance the pole fell clear of the vehicle and the change in momentum of 5462 N-sec (1,228 lb-sec) was survivable (Figure 13).

FS-14

The final full-scale test of the study was a baseline test. Specifically, test FS-14 was performed to delineate the impact severity associated with a 48-km/h collision of a subcompact car into an unmodified pole. Test results shown in Figure 14 demonstrate that such an impact is hazardous to vehicle occupants. Although no noticeable damage to the pole occurred, the engine block was pushed against the firewall. A vehicle change in momentum of 14 509 N-sec (3,262 lb-sec) was realized and the

Figure 9. Full-scale test FS-9.

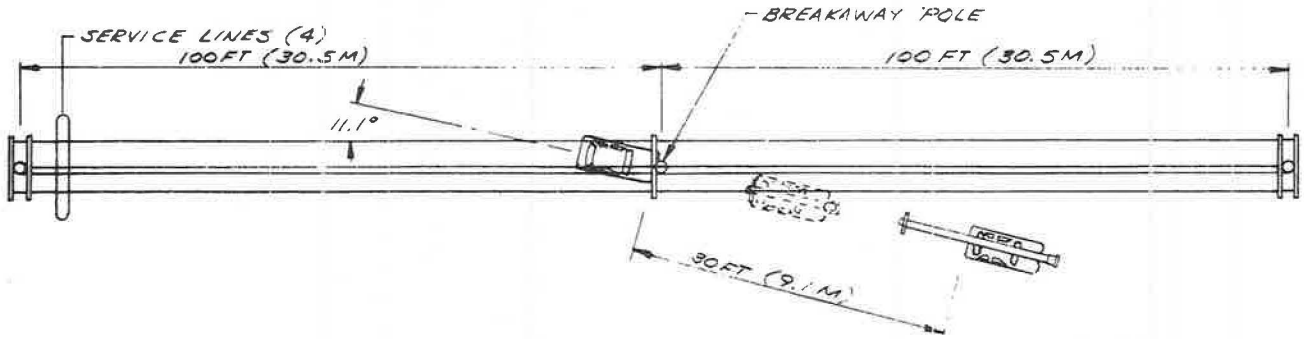

Pole Data	Vehicle Data	Test Results
Type ..... 40 Class 4	Type ..... 1974 Chevrolet Vega	Linear Impulse .....1148 lb-sec (5107 N-sec)
Base Diameter ..... 11.6 in. (295 mm)	Weight ..... 2250 lb (1021 kg)	50 ms Average Acceleration
LPBM(1) ..... Triangular Slip Base	Impact Speed ..... 20.8 mph (33.5 kmph)	Longitudinal (Cine/Accelerometer) .... -3.0 g/-6.9 g
UPBM(2) ..... Crossarm Release Mechanism	Impact Angle ..... 11.1 deg	Lateral (Cine/Accelerometer) ..... -0.4 g/0
Service Line Type ..... 2 ACSR (0.316 in. dia)		Maximum Vehicle Crush ..... 14.5 in. (368 mm)
		Impact Duration ..... 85 msec

Notes:
(1) Lower Pole Breakaway Mechanism
(2) Upper Pole Breakaway Mechanism

Figure 10. Full-scale test FS-10.

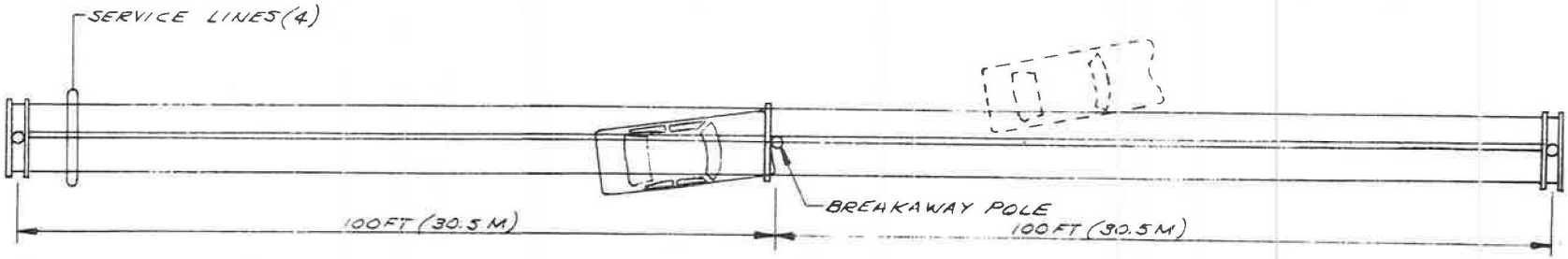

Pole Data	Vehicle Data	Test Results
Type ..... 40 Class 4	Type ..... 1974 Chevrolet Vega	Linear Impulse ..... 1364 lb-sec (6067 N-sec)
LPBM(1) ..... Slip-Base Triangular Plate	Weight ..... 2415 lb (1095 kg)(3)	50 msec Avg Acceleration (Film Analysis)
UPBM(2) ..... Crossarm Release Mechanism	Impact Speed ..... 59.8 mph (96.2 kmph)	Longitudinal ..... -6.1 g
Service Line Type ..... 2 ACSR (0.316 in. dia)	Impact Angle ..... 8 deg	Lateral ..... -0.5 g
		50 msec Avg Acceleration (Accelerometer)
		Longitudinal ..... -8.3 g
		Lateral ..... -6.0 g
		Maximum Vehicle Crush ..... 17 in. (432 mm)
		Impact Duration ..... 70 msec

Notes:
(1) Lower Pole Breakaway Mechanism
(2) Upper Pole Breakaway Mechanism
(3) Weight includes vehicle, instrumentation, and one 50th percentile dummy

Figure 11. Full-scale test FS-12.

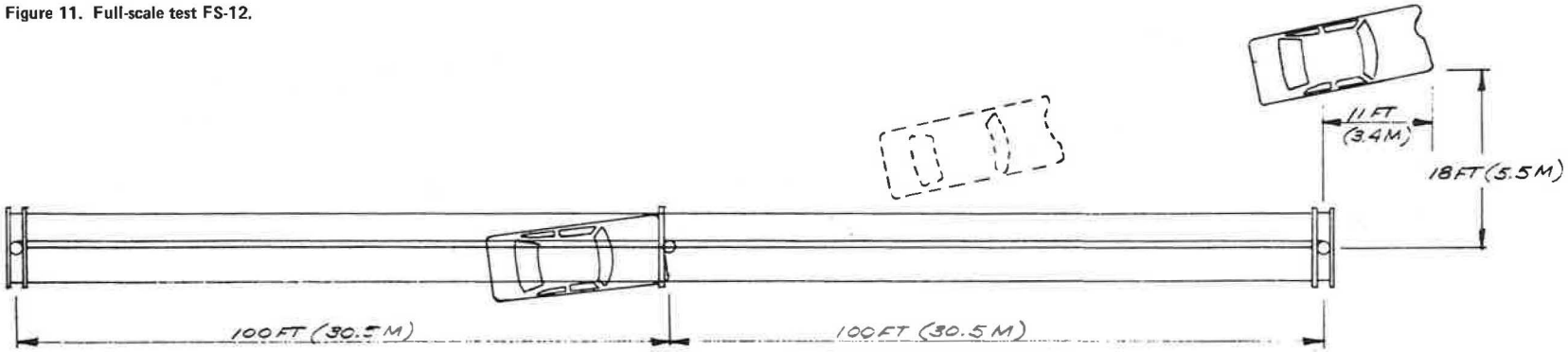

Pole Data		Vehicle Data		Test Results	
Type	40 Class 4	Type	1974 Chevrolet Vega	Linear Impulse	1163 lb-sec (5173 N-sec)
LPBM(1)	Slip-Base Triangular Plate	Weight	2600 lb (1179 kg)(3)	50 msec Avg Acceleration (Film Analysis)	
UPBM(2)	None	Impact Speed	31.5 mph (50.7 kmph)	Longitudinal	-5.0 g
Service Line Type	2 ACSR (0.316 in. dia)	Impact Angle	5.2 deg	Lateral	0.4 g
				50 msec Avg Acceleration (Accelerometer)	
				Longitudinal	-7.0 g
				Lateral	1.0 g
				Maximum Vehicle Crush	12.5 in. (318 mm)
				Impact Duration	120 msec

Notes:
(1) Lower Pole Breakaway Mechanism
(2) Upper Pole Breakaway Mechanism
(3) Weight includes vehicle, instrumentation, and one 50th percentile dummy

Figure 12. Full-scale test FS-13A.

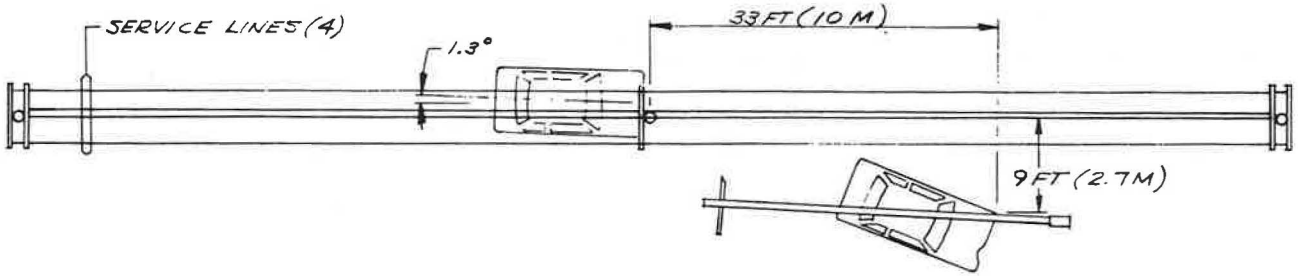

Pole Data		Vehicle Data		Test Results	
Type	40 Class 4	Type	1974 Chevrolet Vega	Velocity Change	
LPBM(1)	slip-base triangular plate	Weight	2600 lb (1179 kg)(3)	Film Analysis	13.22 ft/sec (4.03 m/sec)
UPBM(2)	none	Impact Speed	30.3 mph (48.8 kmph)	Accelerometer	9.58 ft/sec (2.92 m/sec)
Service Line Type	2ACSR (0.316 in. dia)	Impact Angle	-1.3 deg	50 msec Average Acceleration	
		Impact Point	15.25 in. (387 mm) to right of vehicle centerline	Longitudinal (film analysis/accelerometer)	-5.2g/-5.4g
				Lateral (film analysis/accelerometer)	-1.2g/-1.9g
				Maximum Vehicle Crush	9.5 in. (241 mm)
				Impact Duration	120 msec

Notes:
(1) Lower Pole Breakaway Mechanism
(2) Upper Pole Breakaway Mechanism
(3) Weight includes vehicle, instrumentation, and one 50th percentile dummy

Figure 13. Full-scale test FS-13B.

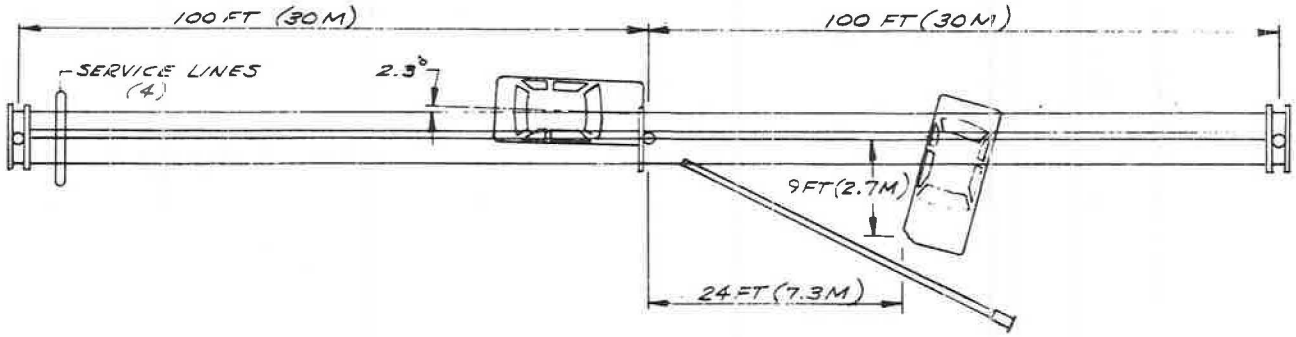

Pole Data

Type ..... 40 Class 4
LPBM(1) ..... slip-base triangular plate
UPBM(2) ..... none
Service Line Type ..... 2ACSR (0.316 in. dia)

Vehicle Data

Type ..... 1974 Chevrolet Vega
Weight ..... 2600 lb (1179 kg)(3)
Impact Speed ..... 31.0 mph (49.9 kmph)
Impact Angle ..... -2.3 deg
Impact Point .... 17.0 in. (432 mm) to right of vehicle centerline

Test Results

Velocity Change
  Film Analysis ..... 16.23 ft/sec (4.95 m/sec)
  Accelerometer ..... 17.43 ft/sec (5.31 m/sec)
50 msec Average Acceleration
  Longitudinal (film analysis/accelerometer)... -4.8g/-3.7g
  Lateral (film analysis/accelerometer)..... 0.8g/2.3g
Maximum Vehicle Crush ..... 11.0 in. (279 mm)
Impact Duration ..... 180 msec

Notes:
(1) Lower Pole Breakaway Mechanism
(2) Upper Pole Breakaway Mechanism
(3) Weight includes vehicle, instrumentation, and one 50th percentile dummy

Figure 14. Full-scale test FS-14.

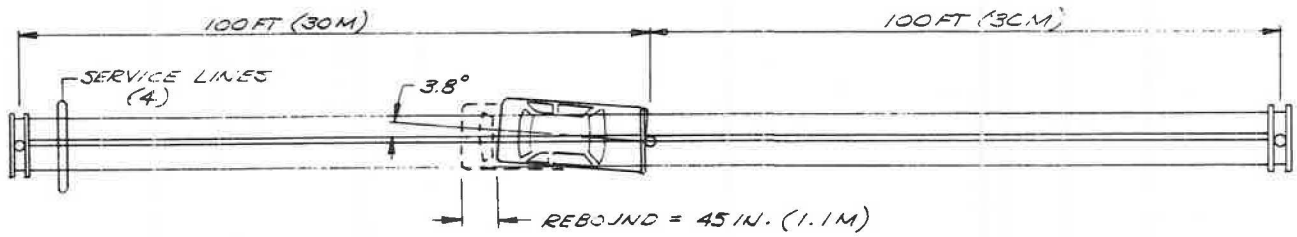

Pole Data

Type(1) ..... 40 Class 4
LPBM ..... none
UPBM(2) ..... none
Pole Diameter ..... 10.82 in. (275 mm)
Service Line Type ..... 2ACSR (0.316 in. dia)

Vehicle Data

Type ..... 1974 Chevrolet Vega
Weight ..... 2600 lb (1179 kg)(3)
Impact Speed ..... 29.4 mph (47.3 kmph)
Impact Angle ..... -3.8 deg
Impact Point ..... vehicle centerline

Test Results

Velocity Change
  Film Analysis ..... 43.1 ft/sec (13.1 m/sec)
  Accelerometer ..... 43.1 ft/sec (13.1 m/sec)
50 msec Average Acceleration
  Longitudinal (film analysis/accelerometer) .... -12.8g/-22.4g
  Lateral (film analysis/accelerometer) ..... -0.2g/-1.5g
Maximum Vehicle Crush ..... 22.0 in. (559 mm)
Impact Duration ..... 110 msec

Notes:
(1) Upper Pole Breakaway Mechanism
(2) Lower Pole Breakaway Mechanism
(3) Weight includes vehicle, instrumentation, and one 50th percentile dummy

impact forces resulted in the failure of the dummy's shoulder harness. This, in turn, caused the dummy to strike the steering column. The impact severity to the head and thorax region was noted by peak acceleration readings of -65.4 and -40 g, respectively; these readings were recorded by accelerometers in the head and thoracic cavity of the dummy.

Slipbase Test Summary

The Slipbase device in all crash tests shows its ability to activate when struck by an errant subcompact car at speeds of 32 to 97 km/h (20 to 60 mph). The possibility exists of the segmented pole landing on the vehicle and causing serious injury. The alternative of striking the unmodified pole, however, is thought to pose a greater risk to vehicle occupants under identical impact conditions (i.e., speed, impact location, vehicle size). Notably, in all tests, whether or not the CRM was employed as an upper pole breakaway mechanism, no service line failure was caused by the strip-away action of the aluminum ties.

SUMMARY AND CONCLUSIONS

Annually, nearly 2,000 fatalities and 125,000 injuries are caused by vehicle-utility pole accidents. Timber utility poles are one of the most hazardous roadside features because of the number used and their placement close to the pavement. Of the more than 20 conceptual designs investigated in the program, the Slipbase design exhibited the best performance in terms of the severity of vehicle impact and capacity for environmental loading.

The full-scale crash tests all involved post-1973 subcompact cars. The tests were conducted on 40-ft class 4 poles that supported four 2ASR conductors. Breakaway was realized in 32-, 48-, and 97-km/h (20-, 30-, and 60-mph) impact tests with 12-m (40-ft) class 4 poles. Change in vehicular momentum was measured at 5106 N-sec (1,148 lb-sec) for the 32-km/h (20-mph) collision. Postimpact pole segment inertia effects increased the change in momentum slightly to 6067 N-sec (1,364 lb-sec) in the 97-km/h (60-mph) crash test. In the three 48-km/h (30-mph) tests, as anticipated, good change in vehicle momentum occurred [i.e., 5173, 4448, and 5462 N-sec (1,163, 1,000, and 1,228 lb-sec)]. The potential exists for a segmented timber pole to fall onto the vehicle and cause significant damage and possible injury; however, the risk of injury to an occupant involved with a vehicle impact into an unmodified pole is believed to be far greater.

The design capacity of a 40 class 4 pole is 53.8 kN-m (39.7 ft-kips) based on the minimum specified circumference and a 27.6 MPa (4.0 ksi) design stress. A maximum wood fiber stress of 51.0 MPa (7.4 ksi) is given by Pender and McIlwain (8) for creosote Southern pine and Douglas fir poles. Experimental findings in this program for used poles demonstrated a 49.1 MPa (7.12 ksi) mean and standard deviation (σ) of 6.8 MPa (0.98 ksi). Based on minimal 40 class 4 pole diameter specifications, a designer can expect that as many as 15 percent of the poles supplied will have a moment capacity of less than 82.5 kN-m (60.9 ft-kips). At the other extreme, the pole may have a moment capacity of more than 135.5 kN-m (100 ft-kips), depending on the actual circumference and wood fiber strength.

The Slipbase design did not fail structurally in any of the static bending tests performed with 40 class 4 timber poles. Slipbase developed the full pole bending strength of each pole in these tests. In all three tests performed the timber fractured below grade at the edge of the lower steel collar. The ultimate bending strength was 115, 111, and 92 percent of estimated unmodified timber pole bending strength. The costs associated with the implementation of Slipbase have not been estimated. Estimated cost for material is $200 for a steel unit.

Additional research and development work is planned to reduce the cost of the Slipbase hardware and to develop a new breakaway mechanism that would segment the pole about 16 ft above the ground. Additional full-scale tests will also be conducted on poles that carry joint electric and telephone lines and on poles that have multiple crossarms, guy wires, and heavy equipment, such as transformers or switches, in order to better define the performance limits of the Slipbase concept.

REFERENCES

1. Fatal Accident Recording Sytem. NHTSA, 1975-1977.
2. G.K. Wolfe and J.D. Michie. Development of Breakaway Concepts for Timber Utility Poles. Southwest Research Institute, San Antonio, Tex., Feb. 1973.
3. Recommended Procedures for Vehicle Crash Testing of Highway Appurtenances. TRB, Transportation Research Circular 191, Feb. 1978.
4. N.L. Graf, J.V. Boos, and J.A. Wentsworth. Single-Vehicle Accidents Involving Utility Poles. TRB, Transportation Research Record 571, pp. 36-43.
5. P.C. Skeels. The Role of the Highway in a Safe Transportation System. Presented at the 65th Annual Convention, American Road Builder's Association, Washington, D.C., 1968.
6. J.D. Michie and M.E. Bronstad. Location, Selection, and Maintenance of Highway Traffic Barriers. NCHRP, Rept. 118, 1971, 96 pp.
7. National Bureau of Standards. Safety Rules for the Installation and Maintenance of Electric Supply and Communication Lines--Comprising Part II, the Grounding Rules of the 5th Edition of National Electrical Safety Code H32, 5th ed. U.S. Government Printing Office, 1941.
8. H. Pender and K. McIlwain. Electrical Engineers Handbook, 4th ed. Wiley, New York, 1950.
9. M.E. Bronstad and J.D. Michie. Recommended Procedures for Vehicle Crash Testing of Highway Appurtenances. NCHRP, Rept. 153, 1974, 19 pp.

Publication of this paper sponsored by Committee on Safety Appurtenances and Committee on Utilities.