at 100 ft reached a maximum level and remained constant for approximately 6 sec.

3. At a train speed of 90 mph the noise level at 100 ft reached a maximum level and remained constant for approximately 3 sec.

4. The noise level behind the noise wall in Montebello was 74 dB(A) when the passenger train speed was 65 mph.

5. Because of continuously welded rail construction of the trackage in Montebello, the noise level is expected to increase less than 4.5 dB(A) if the speed is increased to 90 mph.

6. The noise wall in Montebello along Sycamore Street provides approximately 13 dB(A) attenuation.

7. Other noise from sources (such as switching of freight cars, freight trains, and engines; passing cars; motorcycles; delivery trucks; and airplanes) ranged from 71 to 82 dB(A). The highest train whistle noise recorded was 99 dB(A). These levels were measured behind the wall at the intersection of Spruce and Sycamore streets in Montebello.

Publication of this paper sponsored by Committee on Transportation-Related Noise and Vibration.

Synthesis of Disc Brake Squeal Quieting Experience

MICHAEL A. STAIANO

ABSTRACT

Disc brake squeal produced by Washington Metropolitan Area Transit Authority transit cars precipitated a number of on-car and laboratory tests. The results of these tests are summarized along with the experience of other investigators in both the transit and automotive fields. Experience indicates that some brake systems are prone to squeal while others are not, and that the benefit of system modifications varies dramatically for different disc brake systems. Modifications that hold the most promise for reducing the propensity of a brake system to squeal are sufficiently damping the brake pad backplate, disc rotor, or caliper; altering disc rotor stiffness, caliper mass, or caliper stiffness; reducing (if possible) the brake pad friction coefficient; and, possibly, eliminating brake pad grooves.

The existence of brake squeal has been recognized as a problem for some time primarily because of its occurrence in highway vehicle drum and disc brake systems. Rail transit cars have also exhibited brake squeal from their tread and disc brakes. In the United States three transit systems use disc brakes: the San Francisco Bay Area Rapid Transit District (BART), the Chicago Transit Authority (CTA), and the Washington Metropolitan Area Transit Authority (WMATA). Of these, only WMATA has experienced problems due to brake squeal. The squeal propensity of the WMATA brake system has limited the options available for replacement friction pad materials, and at one point squeal sound levels became so severe that a considerable public outcry ensued. The purpose of this paper is to document the experience gained in attempting to reduce the brake squeal on WMATA cars and to place this experience in the context of other work.

WASHINGTON METRORAIL EXPERIENCE

The disc brake assembly used by the WMATA Metro cars is similar in configuration to automotive caliper disc brakes with ventilated rotors (Figure 1). The disc is 20 in. in diameter and 3.6 in. thick and weighs 137 lb (1). The kidney-shaped brake pads are actuated by two side-by-side pistons. The brake system was designed by the Abex Corporation with two assemblies fitted per axle for a total of eight assemblies per car. (Author's note: Equipment sup-

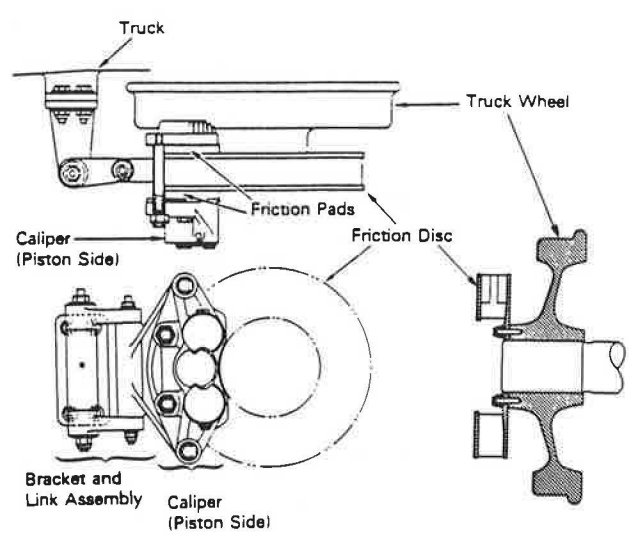

FIGURE 1 WMATA/Abex disc brake system.

pliers are identified in this paper for clarity of presentation. Their reference constitutes neither endorsement nor criticism.)

From the time WMATA initiated rail service, its brake system exhibited a propensity to squeal (2). The BART brake system with similar design parameters, on the other hand, has never exhibited squeal (1). The squeal experienced early in the Metrorail history was occasional in nature and relatively low in amplitude and frequency (Figure 2a). However, when the original asbestos-bearing Abex 45109 friction pads were replaced with asbestos-free Knorr 981 pads, squeal became common, and its amplitude and frequency increased considerably (Figure 2b) (3).

To correct the deteriorated squeal behavior, a series of on-car modifications were evaluated for an immediate solution (4). Laboratory investigations using a constant-speed dynamometer were also undertaken for long-term improvements (5,6). The on-car modifications included a variety of replacement pads and system modifications fitted to test trains run during nonrevenue hours. The on-car tests found one pad--the Abex 1389b--to be relatively squeal-free. This pad was selected as a suitable replacement pad with acceptable squeal behavior.

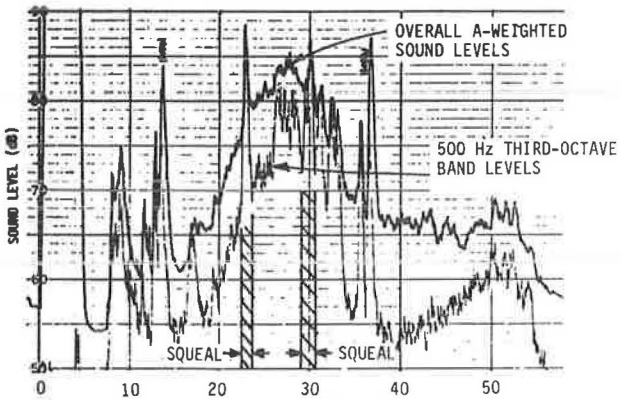

(a) Judiciary Square station, January 27, 1976

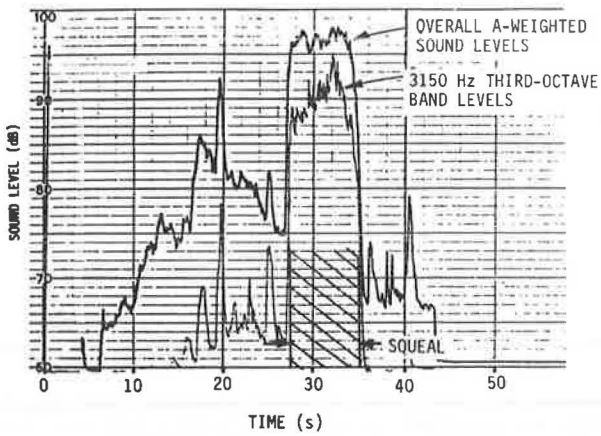

(b) McPherson Square station, February 20, 1981

FIGURE 2 Typical brake squeal time histories.

SQUEAL MECHANISM

The mechanism of brake squeal generation confounded investigators until two key observations were made (7):

1. Squeal is a function of the direction of disc rotation (i.e., squeal might occur for only clockwise rotation and not for counterclockwise rotation), and
2. Deceleration measured during a squealing stop is somewhat higher than that measured for an essentially identical stop without squeal.

These observations suggested that squeal is related to an asymmetry of the contact area of the pad with the disc, such that the contact area is in a "sprag position" with respect to the backplate-piston contact point. This sprag configuration, or "digging in" of the pad to the disc, results in elastic deformation of the pad, which then reduces the binding forces and releases the pad to its original position from which the cycle can be repeated. This theory was tested by grinding a pad to an exaggerated asymmetry and varying the backplate-piston contact point. Squeal was observed consistent with the theory for the configuration shown in Figure 3 (7) for $\theta \approx \tan^{-1} \mu$, where μ is the pad friction coefficient. Further analysis indicated that squeal was possible for $0 < \theta < \tan^{-1} \mu$.

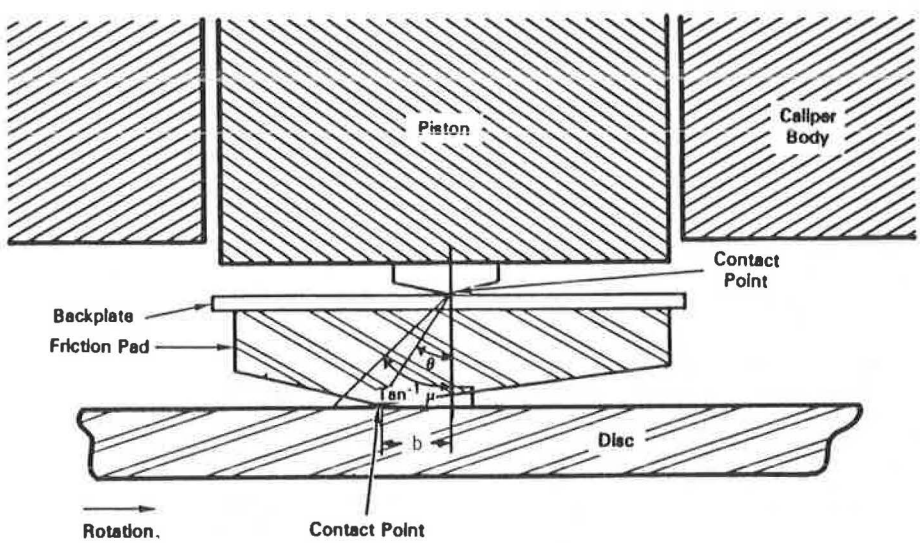

FIGURE 3 Disc, pad, and piston in squeal configuration (7).

Fundamental to the sprag-slip theory is the presence of the asymmetrical pad-disc contact area. The asymmetry is believed to arise from nonuniform pad wear, working of the backplate by the piston, or thermal distortion of the pad (7,8). A squeal-prone condition and slight backplate dishing have been observed after simply heating a pad to about 250°C and allowing it to cool. Thus heavy braking and subsequent cooling is likely to cause such distortions, as has been observed of squeal in in-service conditions. At low brake pressures the contact area is quite small due to the distortion; at high brake pressures the pad is flattened-out, thereby reducing the asymmetry. The result is less squeal at high brake pressures. The requirement that pad asymmetry exist probably accounts for the appearance of squeal in the Knorr 881 pad in the WMATA brake system only after a period of revenue service.

Investigators have noted that the frictional force on the face of the pad is resisted by a restraining force at the pad backplate resulting in a moment tending to rotate the leading edge of the pad toward the disc and causing more rapid wear at the leading edge (7). This moment also tends to shift the contact patch toward the leading edge--to a "spragging" position. This is shown in Figure 4. From translational equilibrium, all forces acting on the pad can be estimated in terms of the brake pressure force (N) and the friction coefficient. From rotational equilibrium, the offset (a) of the pad-disc effective contact point to the backplate-piston effective contact point must be $a = \mu t$, where t is the pad thickness. It is interesting to note that the maximum leading contact point offset (b) for squeal is equal to a. (Note that, even for the WMATA/Abex brake system, this offset is quite small. Specifically, for a new pad, $b \approx 0.25$ in. for a pad whose half-length is approximately 6 in.)

ANALYTICAL DESCRIPTION OF SQUEAL

The sprag-slip theory was supported and refined by a series of investigations (8-14). A mathematical description of a complex system such as a disc brake assembly requires a considerable number of simplifying assumptions. Expression of sprag-slip for a real (automotive) disc brake assembly, for example, consisted of a 6 degree of freedom (df) lumped-parameter model in which system damping was ignored (8). The interaction of the inner and outer pads was also ignored, such that the model was simplified to a single pad pressed against the disc. [Other work has demonstrated that the interaction of the pads does affect the parameter ranges that will result in squeal. However, the general trends indicated by the single-pad model are representative (14).] Thus this model consists of three elements (the disc, pad, and caliper), with each possessing rotational and translational stiffness and mass. Element rotations are about an axis parallel to the disc radius and displacements are lateral (i.e., normal to the plane of the disc). Disc mass and stiffnesses are effective or equivalent values estimated for an equivalent beam from expected disc modal behavior during squeal.

When the equations of motion and boundary conditions are applied to the disc, pad, and caliper elements, a set of equations is obtained yielding solutions for the displacements of disc, pad, and caliper and the rotations of the disc and pad. These solutions have the form $y = Y e^{zt}$, where z can be imaginary; thus,

$$e^{zt} = e^{xt} e^{iwt} = e^{xt} [\cos(wt) + i \sin(wt)] \qquad (1)$$

Therefore, the solutions are simple harmonic if $x = 0$, sinusoidal and damped if x is negative, and sinusoidal and diverging (i.e., unstable) if x is positive (15). Squeal is the self-excited oscillation that occurs when the brake system parameter values combine to yield an unstable solution to the displacement equations (i.e., positive x). In the literature the magnitude of positive x has been defined as the "squeal propensity" and w/2 has been called the "squeal frequency."

EFFECT OF BRAKE SYSTEM DESIGN ON SQUEAL

The fundamental squeal mechanism is understood. Simplified experimental and analytical models provide results that agree mutually and agree reasonably with specific real brake systems. However, behavior for one brake system may not be representative of that of another. Furthermore, the best current analytical model in the literature is still a considerable simplification of a complex system. Industry practice (both rail transit and automotive) for solving squeal problems remains basically trial-and-error modification of actual components. However, the analytical results are useful in guiding the types of modifications that may ultimately prove successful.

Brake Pad

Clearly, the brake pad plays a significant role in the squeal mechanism. When the original Abex 45109 pad was replaced by the Knorr 881 pad on the Metrorail cars, squeal worsened considerably; when the Knorr 881 was replaced by the Abex 1389b, squeal was virtually eliminated (see Table 1). Interestingly, the presence of even one squeal-prone pad in a

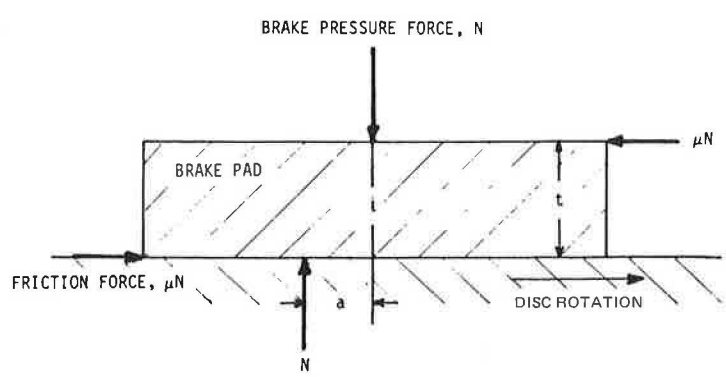

FIGURE 4 Forces acting on brake pad.

TABLE 1 Tests of WMATA On-Car Modifications

Pad	Disc	No. of Tests	L_{Amax}	Configuration
All	All	40	86	With various system modifications
Abex 45109	Abex	1	80	Original asbestos pads
Knorr 881	All	23	89	With various system modifications
Knorr 881-1	All	6	84	With various system modifications
Abex 1389b	All	7	77	With various system modifications
All	Knorr	10	88	With various system modifications
All	Abex	21	85	With various system modifications
NYAB	NYAB	1	79	Different brake assembly, including caliper
Knorr 881	All	7	92	With 0.01- to 0.10-in. rubber material behind backplate plus various other modifications
Knorr 881/881-1	All	5	89	With 0.125-in. steel plate inserted behind or welded to backplate plus various other modifications
Knorr 881	All	5	87	4-slot, 8-segment pads plus various other modifications
Knorr 881	All	4	90	1-slot, 2-segment pads plus various other modifications

Note: A test consisted of recordings of maximum slow-response A-weighted sound levels for at least six passbys of a two-car train fitted with a given brake system configuration. L_{Amax} is the average of the average maximum A-weighted sound levels for each test. Tests were performed at Union Station-Visitors Center Station, January 23 to April 7, 1981. Pads supplied by Knorr were manufactured by Jurid GmbH, Hamburg, West Germany.

caliper is sufficient to induce squeal (6,7). In tests on the same automotive disc brake assembly, four different friction materials tended to excite significantly different frequencies (16).

Increasing pad friction coefficient increases the range of pad contact point geometries ($0 < \theta < \tan^{-1} \mu$), which are squeal prone. Thus high-friction pad compositions tend to squeal more. Analytical results indicate that a minimum friction coefficient exists for which no squeal will be produced for any contact point geometry. In practice, for at least one actual system, this minimum friction coefficient was found to be 0.25 (8). When squeal is experienced, however, its sound level is independent of the friction coefficient (17).

Friction Material Stiffness

The 6 df model described in the previous section predicted squeal instability regions within fairly well-defined ranges of pad (Young's) modulus. However, the usefulness of pad modulus as a design parameter is limited by the pad modulus variability with temperature and pad distortion that causes the pad to become less stiff and more nonlinear (8).

In the WMATA laboratory tests, Battelle Columbus Laboratories measured the compressive static stiffnesses of Knorr 881 and Abex 1389b pads (5). The results are given in Table 2 (5) as a function of brake pressure. Note that in the load range representative of WMATA service, the quieter Abex pads are approximately twice as stiff at low braking effort (B1) and are approximately 20 percent stiffer at high braking effort (B5). The Abex 1389b pads have been characterized as "soft" (i.e., faster wearing) but less squeal prone. This behavior has also been attributed to some automobile brake systems. However, neither squeal propensity nor service life has been found to be simply related to pad hardness.

TABLE 2 Brake Pad Compressive Static Stiffness *(5)*

Braking Mode	Brake Press Range (psi)	Brake Force[a] (lb)	Stiffness (10^3 lb/in.)	
			Knorr 881	Abex 1389b
Snow	60-65	600	130	380
B1	110-130	1,200	180	340
B2	240-270	2,600	300	410
B3	290-310	3,000	320	420
B4	340-370	3,600	360	450
B5	427-473	4,500	420	490
Emergency	450-500	4,800	430	500

Note: The data are for static stiffness for increasing load.

[a]Total force approximated for brake pressure acting on two 2.5-in.-diameter pistons.

Most disc brake pads are manufactured with at least one slot or "rain groove" (usually radial with respect to the disc). Somewhere in disc brake lore originated the nostrum that additional slots would quiet squealing systems, although no documented evidence of this has been found by the author. WMATA attempted this approach on the Knorr 881 pad by cutting an additional slot to form eight segments. This modification had no significant effect on average maximum squeal levels (see Table 1). The Office of Research and Experiments (ORE) of the European International Union of Railways (UIC) also tried this approach on a European-style (UIC-type) scissors-action caliper disc brake assembly and found the resultant squeal was prolonged and more objectionable (17). Battelle tried a further variation on this theme by cutting several radial slots through a Knorr 881 pad, including the backplate. The result of this modification was to reduce the number of squeal frequencies observed at high brake pressure, but it increased the number of squeal frequencies at lower brake pressure (5). Battelle also tried to remove friction material from one end of a brake pad to induce asymmetry and alter pad response (6). This modification did not alter squeal characteristics for either direction of disc rotation.

A simple geometric model of sprag indicates that prerequisite to squeal is a pad-disc contact offset (b) with $0 < b < (t \tan^{-1} \mu)$. The width $(t \tan^{-1} \mu)$ was shown previously for the WMATA/Abex assembly to be relatively narrow compared with the circumferential length of the pad. Conceivably, removing the center portion of the friction material ($\pm t \tan^{-1} \mu$ about the center of the pad) could force the contact point geometry beyond the squeal range. This was apparently tried with an automotive brake assembly for which the pad center was milled out to within 0.75 in. of the pad ends. The result was an alteration of the observed frequencies, but apparently squeal was not eliminated (16).

Holographic interferometry experiments to determine component vibration behavior of an automotive disc brake assembly showed high vibration levels at the brake pad leading edge (18). This behavior is reasonably explained by the sprag-slip mechanism. These experimenters attempted to make the pad stiffer by testing the same pad type with and without a single central rain groove. Squeal frequency peaks for the ungrooved pad were reduced at least 15 dB. WMATA tested versions of the Knorr 881 with a

single slot instead of the standard three slots, with no benefit (see Table 1). Apparently no tests were made of a Knorr 881 with no slots, however.

Backplate Stiffness

The laser holography tests previously cited also showed high levels of pad backplate vibration. These results included "x" and "+" modal patterns exhibited on a square backplate with a centrally located pressure point. Results for an elongated pad (more similar to the WMATA pad geometry) gave a roughly radial nodal line somewhat comparable to the result obtained by Battelle for the Knorr 881 pad (6). The vigorous vibration of the backplate would appear to suggest that some modification might alter the system characteristics sufficiently to reduce squeal. Two approaches have been tried: stiffening bars and plates, and damping treatments.

The use of backplate inserts has been employed by the automotive industry, reportedly with some success. WMATA has tried a variety of backplate-stiffener modifications with a 0.125-in. steel plate (including some with a silicone rubber-fiberglass fabric bonded to the plate and some with a Teflon-type coating). These experiments showed no benefit (Table 1). Battelle also tried this approach with a 0.375 x 1.0 x 12-in. bar with similar lack of success (5). Reducing backplate stiffness by the previously mentioned slotted backplate was also ineffective. Insertion of thin elastomeric sheets behind the backplate also produced no benefit (Table 1).

Damping

In the Battelle compressive static stiffness measurements, both pads exhibited considerable hysteresis in compression with the "quiet" Abex pad exhibiting significantly greater hysteresis (consequently greater internal damping) than the "noisy" Knorr pad--an intuitively reasonable result (5). However, in dynamic tests on the two pads using an impedance hammer to explore the transverse bending behavior, the Knorr pad exhibited about 30 percent greater damping than the Abex pad. (Specifically, the results were Knorr 881, mean of 4.6 percent critical damping versus Abex 1389b, mean of 3.4 percent critical damping.) Similarly, in tests using a steady-state shaker excitation of suspended pads to explore the behavior of the friction material in a plane parallel to the disc and backplate, the Knorr pad exhibited about 90 percent greater damping than the Abex pad. (Specifically, the results were Knorr 881, mean of 2.5 percent critical damping versus Abex 1389b, mean of 1.3 percent critical damping.)

ORE performed pad damping experiments on an UIC-type brake assembly. In tests with an approximately 0.125-in. rubber coating to either the brake pad or the brake pad holder, no benefit was produced. In a test with about a 0.25-in.-thick "epoxy resin coating...on both the bearing surface of the pad and on the dove-tail seat...[such that] there was no longer any metallic connection between brake pad and brake pad holder," squeal was eliminated and sound level was reduced by 31 dB(A) (17). This treatment was not, however, considered suitable for operational use in its tested form. (Also, the treatment probably not only increased system damping but also significantly altered system stiffnesses.) Unfortunately, no damping capacity data were reported for the standard and modified assemblies.

Battelle tested a constrained-layer damping treatment on the Knorr pad backplate consisting of a 0.05-in. damping layer with a 0.25-in. steel constraining plate (6). This modification resulted in a 4 dB(A) reduction in squeal sound levels, but the pad had "squeal characteristics similar to those of the same pads before modification." This lack of success may be explained by the relatively limited increase (approximately 50 percent) in damping in the modified pad. (Damping measured by Battelle indicated that the standard pad had a mean of 4.9 percent critical damping, whereas the modified pad had a mean of 7.5 percent critical damping.)

Disc

The WMATA on-car tests showed no significant difference in maximum squeal levels between interchangeable discs provided by different manufacturers (Table 1). In tests using a simplified laboratory test rig with an 8-in.-diameter and approximately 0.1-in.-thick solid disc, a squeal frequency was observed "occurring near to the anti-resonance of the free disc between the (3,0) and (4,0) modes..." with the disc in a (3,0) mode when squealing (11). [Disc mode shape (D,C) corresponds to D nodal diameters and C nodal circles.]

Using a slightly different test rig, a (2,0) modal shape was observed for the squealing disc; and, with a significantly thicker disc, a (1,0) mode was observed with the nodal diameter line perpendicular to the radial line containing the contact point (13). Using holographic interferometry techniques on a small automotive disc brake assembly in squeal, six nodal radii were observed, with the 6th antinode "wholly suppressed by the brake pad" for an apparent (3,0) disc mode shape (18). Similarly, apparent (4,0) and (5,0) mode shapes were also observed. Battelle used a noncontacting displacement pick-up to probe a squealing Abex disc (6). Their findings implied a pattern similar to those obtained by the holographic work, with at least seven nodal radii indicated. Speculating the presence of an additional unobserved nodal radius just after the pad trailing edge and suppression of the 8th antinode by the pad suggests the disc is responding in a (4,0) mode.

Stiffness

A number of efforts have been made to "detune" the rotor to eliminate squeal. ORE tried two approaches (17): The removal of some of the cooling ribs of a rail transit brake disc to obtain an irregular rib distribution in 90-degree sectors gave no significant improvement. Machining one of the two disc friction surfaces (apparently to the wear limit) also produced no improvement. In an experiment similar to ORE but with cooling fin randomization over a full 360 degrees, Battelle found squeal frequency peaks were less intense but more numerous comparing modified and unmodified Abex rotors (5).

In the simplified laboratory test rig using 0.4-in.-diameter steel pins in place of brake pads, the effect of disc stiffness was explored by varying the radius of the contact point on the disc (13,14). Assuming disc stiffness

$$k_d \propto h^3/r^4 \qquad (2)$$

where h is the disc thickness and r is the contact point radius, squeal instability regions were clearly defined as a function of disc stiffness, contact angle, and beam stiffness. (Beam stiffness was the experimental analog to pad and caliper stiffness.) However, as previously mentioned, a thicker disc squealed in a different mode, appar-

ently due to stiffness and mass effects, so that a simple thickness-cubed relationship is not valid. Apparently squeal cannot be eliminated in real systems by simple disc stiffness changes, although it is important in its interaction with caliper stiffness, as discussed in the following section.

A practical approach taken by the automotive industry has been to stiffen the rotor to increase the frequency of the disc modes out of the range of human hearing. However, the viability of this approach with the much more massive transit car discs is questionable.

Damping

An approach that has been explored by the automotive industry and is now in production for a number of automobiles is the use of high-damping discs. Gray iron is a generic cast iron commonly used in brake discs (including the Abex rotor). The internal damping capacity of gray irons has been found to be a function of its chemical composition--specifically, the equivalent iron carbon content. A number of batches of brake discs were cast and fitted to automobiles to be evaluated for squeal propensity; in addition, samples from these batches were tested for their damping capacity (19). The relationship of damping capacity (given in average percent critical damping for disc resonances greater than 2,000 Hz) with iron carbon equivalency (%CE) obtained from those tests is

$$\%C/C_C = 0.302(\%CE) - 1.164 \quad (3)$$

with correlation coefficient r = 0.83 [from Miller (19)].

From the automobile tests in representative service, this study found that "about 0.2% critical damping was required to suppress squeal to a commercially acceptable level under the test conditions" and "essentially squeal-free brakes were obtained with 0.3% critically damped brake discs" (19). These conclusions are valid because the vehicles and brake pads ($\mu \approx 0.35$) were of the same type. However, the required numeric values of damping capacity are not universally applicable. For example, 0.2 percent critical damping may be only marginally acceptable for a different brake assembly or pad composition.

A disadvantage of high-damping gray irons is their inferior strength compared with other gray irons; thus, their use may necessitate rotor redesign, thereby reducing their suitability for retrofits. However, higher disc damping may alternatively be accomplished by mechanical damping devices.

Battelle measured the damping capacity of an Abex rotor (dynamometer-mounted without caliper and pads) by using a shaker to provide a white-noise excitation (5). The mean damping capacity over four measurement locations was 1.4 percent critical damping. Battelle also measured the damping capacity of the Abex rotor by using an impedance hammer (6). The mean damping capacity measured was 0.14 percent critical damping. (The difference in the two damping capacity results for the Abex rotor is unexplained; both the shaker and hammer methods are expected to agree more closely for the nominally identical installations.)

Battelle attempted to determine the effect of rotor damping capacity by filling the interior cooling passages of an Abex rotor with lead shot (5). Using the shaker and broadband excitation, the mean damping capacity over the four measurement locations was 6.4 percent critical damping--about 5 times greater damping than the standard rotor. (The increased rotor mass was not reported.) When the shot-filled rotor was tested, squeal was experienced with fewer but more intense peak frequencies.

When an automotive disc with "four radial slots cut from the rim to the hub" was operated in a laboratory test, squeal was reported to be eliminated (16). Details of the modification were not provided, although it was not considered suitable for production. The mechanism of this modification apparently was increased damping because the unslotted rotor had a bell-like ring when struck with a hammer, whereas the slotted rotor gave a very dead sound. Unfortunately, no other damping information was provided.

Caliper

In the laser holography experiments of various small automotive caliper configurations, the caliper structures were seen to participate in vigorous vibration. ORE measured lateral vibration on the brake pad holder on a UIC-type assembly and found high vibration levels. In on-train measurements of WMATA cars, a prominent caliper vibration frequency peak was observed that compared reasonably with a prominent airborne noise peak for the Abex brake assembly (20).

Mass and Stiffness

The 6 df model of the automotive disc brake assembly indicated that the squeal instability region is sensitive to both caliper mass and caliper stiffness (8). This model predicted three distinct narrow ranges of caliper mass where squeal instability is expected, with one range of significantly greater propensity [Figure 5a (8)]. With respect to caliper stiffness, the model predicted the system would tend to be stable at low stiffness and unstable with high squeal propensity at high stiffness, as shown in Figure 5b. Other experience both supports and contradicts these findings. Caliper mass modification has been effective in eliminating squeal in a squeal-prone brake assembly; at least one automobile is currently in production with additional caliper mass for this purpose. On the other hand, the same manufacturer has found that a stiffer caliper is less squeal prone. Apparently, the effect of stiffness changes is system specific.

This caliper stiffness experience correlates with findings obtained by using the simplified laboratory test rig (12-14). In these experiments beam stiffness (the experimental caliper and pad stiffness analog) interacted with disc stiffness in the definition of squeal instability regions for a given contact point geometry. For a given relatively narrow range of disc stiffness, the squeal instability was virtually independent of beam stiffness; further, for a given relatively narrow range of beam stiffness, the squeal instability was virtually independent of disc stiffness. This finding is shown in Figure 6 (12). (Note that the figure shows the pin-disc system's theoretical unstable regions for $\theta = 3$ degrees, $\mu = 0.4$.)

Damping

The presence of high vibration levels on the caliper structure suggests that the attachment of damping devices could dissipate significant squeal energy and potentially reduce or eliminate squeal propensity. Surprisingly, relatively little attention has been devoted to this approach. The ORE damped

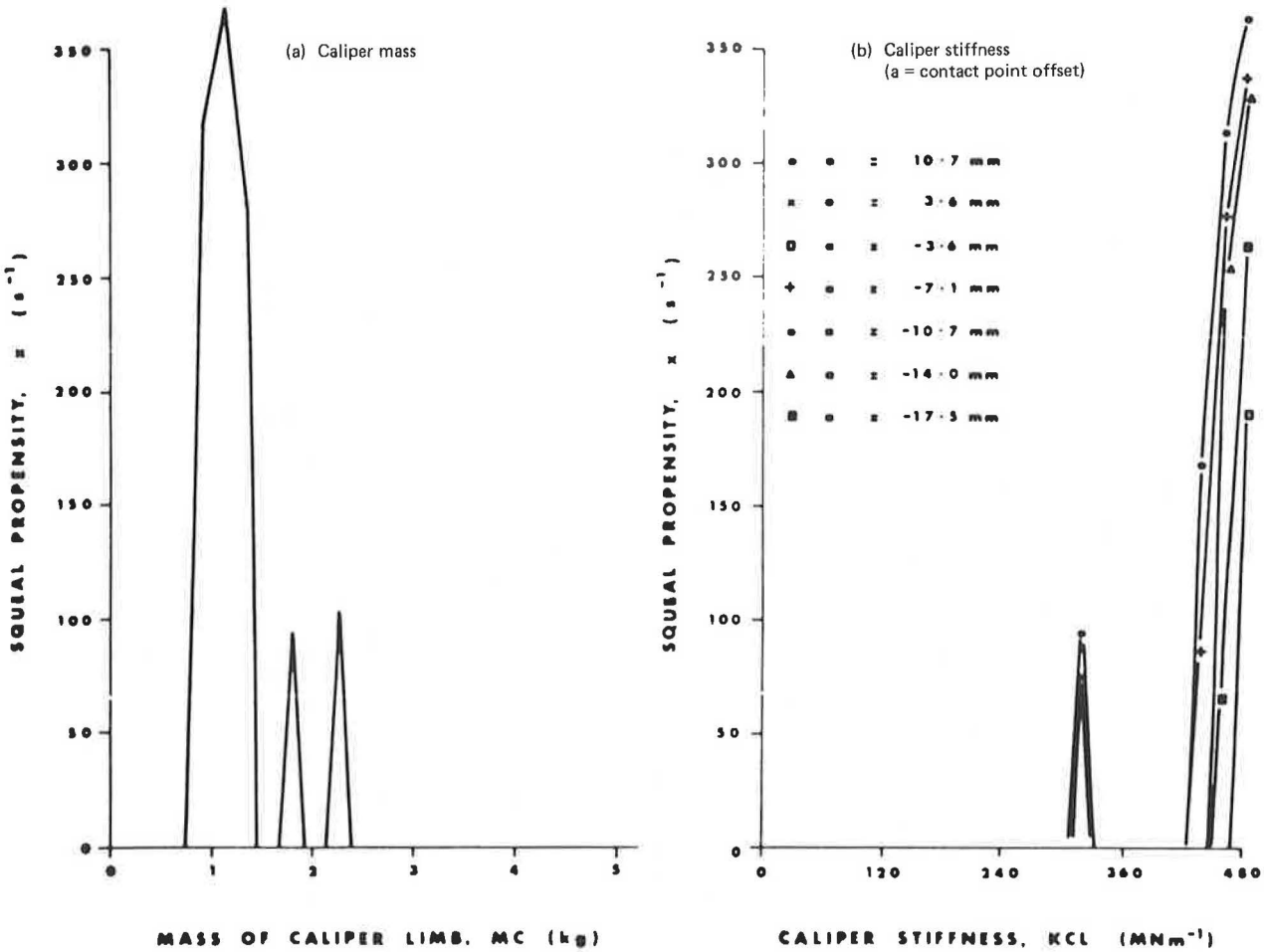

FIGURE 5 Effect of caliper parameters *(8)*.

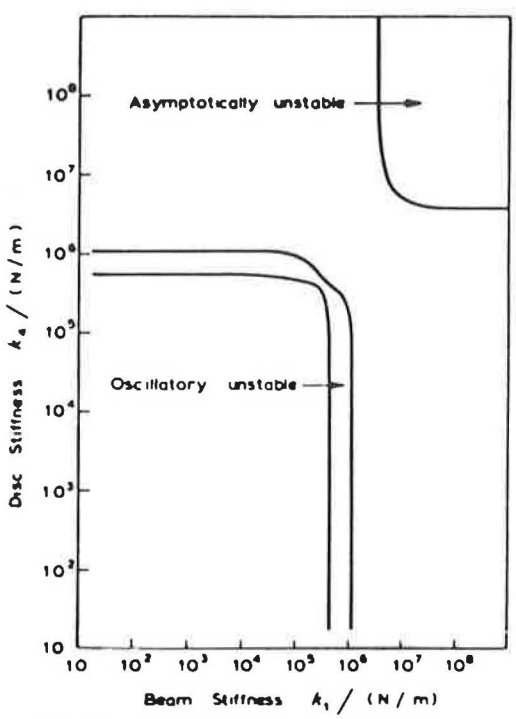

FIGURE 6 Effect of disc versus caliper stiffness *(12)*.

pad holder, described previously, was effective. One of the experiments performed in conjunction with the laser holography studies included the application of adhesive damping pads to the caliper surface (18). This treatment was apparently effective in attenuating caliper vibration, although squeal was still experienced with that assembly.

CONCLUSIONS

Experience has shown that some brake systems are prone to squeal while others are not (e.g., WMATA versus BART). Further, even for squeal-prone systems, the response of the system to modification is system specific (i.e., modifications that are successful for one system have been unsuccessful for others). With these uncertainties in mind, some generalizations can be made.

1. Increasing backplate, disc, or caliper damping sufficiently is likely to reduce squeal propensity.
2. Increasing or decreasing disc stiffness, caliper mass, or caliper stiffness may move the brake system response out of the squeal instability region.
3. If a low friction coefficient pad ($\mu < 0.25$) can provide acceptable braking performance, it is a means to eliminate squeal.
4. Eliminating pad grooves may reduce squeal propensity.

ACKNOWLEDGMENTS

The author would like to acknowledge the following individuals for the information and insight they provided and not otherwise referenced: R. Scarbrough and V. Michalski, WMATA; G. Sastry, DeLeuw, Cather & Company; T. Flaim and R. Hickling, General Motors Corporation; and H. Burt, Knorr Brake Corporation. This work was sponsored in part by the Transportation Systems Center, U.S. Department of Transportation; R. Hinckley was the program director.

REFERENCES

1. L.A. Ronk and M.A. Staiano; ORI, Inc. Evaluation of Squeal Noise from the WMATA Transit Car Disc Brake System. Report UMTA-MA-06-0099-81-4. Transportation Systems Center, U.S. Department of Transportation, Cambridge, Mass., March 1981.
2. G.P. Wilson; Wilson, Ihrig, and Associates. Metrorail Operational Sound Level Measurements: Subway Station Sound Levels. Washington Metropolitan Area Transit Authority, Washington, D.C., Nov. 1979.
3. J.F. Waters. Metrorail Disc Brake Squeal Public Noise Exposure--Early 1981. Tech. Report 81-01. Waters Science Associates, Inc., Rockville, Md., March 1981.
4. G.N. Sastry and E.C. Green, Jr. A Quick Fix for Washington Metro Brake Squeal. In Transportation Research Record 896, TRB, National Research Council, Washington, D.C., 1982, pp. 71-74.
5. C.W. Rodman; Battelle Columbus Laboratories. Investigation of Noise Generated by Brakes of WMATA Rail Transit Vehicles. Transportation Systems Center, U.S. Department of Transportation, Cambridge, Mass., Sept. 15, 1981.
6. C.W. Rodman and M.W. Kurre; Battelle Columbus Laboratories. Phase II--Investigation of Noise Generated by Brakes of WMATA Rail Transit Vehicles. Transportation Systems Center, U.S. Department of Transportation, Cambridge, Mass., Sept. 15, 1982.
7. R.T. Spurr. Brake Squeal. In Vibration and Noise in Motor Vehicles, Proc., Institution of Mechanical Engineers, London, 1971, pp. 13-16.
8. N. Millner. An Analysis of Disc Brake Squeal. SAE Paper 780332. Presented at SAE Congress and Exposition, Detroit, Feb. 27-March 3, 1978.
9. S.W.E. Earles and G.B. Soar. Squeal Noise in Disc Brakes. In Vibration and Noise in Motor Vehicles, Proc., Institution of Mechanical Engineers, London, 1971, pp. 61-69.
10. M.R. North. A Mechanism of Disc Brake Squeal. Presented at 14th FISITA Meeting, June 1971.
11. S.W.E. Earles and G.B. Soars. A Vibrational Analysis of Pin-Disc System with Particular Reference to Squeal Noise in Disc Brakes. Presented at Stress Analysis Group Annual Conference, Institute of Physics, London, 1974.
12. S.W.E. Earles and C.K. Lee. Instabilities Arising from the Friction Interaction of a Pin-Disc System Resulting in Noise Generation. Trans. of ASME, Journal of Engineering for Industry, Vol. 98, Series B, No. 1, 1976, pp. 81-86.
13. S.W.E. Earles. A Mechanism of Disc-Brake Squeal. SAE Paper 770181. Presented at International Automobile Engineers Congress and Exposition, Detroit, Feb. 28-March 4, 1977.
14. S.W.E. Earles and M.N.M. Badi. On the Interaction of a Two-Pin-Disc System with Reference to the Generation of Disc-Brake Squeal. SAE Paper 780331. Presented at SAE Congress and Exposition, Detroit, Feb. 27-March 3, 1978.
15. R.H. Scanlan and R. Rosenbaum. Introduction to the Study of Aircraft Vibration and Flutter. Macmillan, New York, 1951.
16. J.H. Tarter. Disc Brake Squeal. SAE Paper 830530. Presented at SAE Congress and Exposition, Detroit, Feb. 28-March 4, 1983.
17. Tests to Reduce the Noise During Braking and Running Round a Sharp Curve: Results of Tests and Conclusions. Report C 137/RP 7. Office for Research and Experiments, International Union of Railways, Paris, Oct. 1977.
18. A. Filske, G. Hoppe, and H. Matthai. Oscillations in Squealing Disk Brakes--Analysis of Vibration Modes by Holographic Interferometry. SAE Paper 780333. Presented at SAE Congress and Exposition, Detroit, Feb. 27-March 3, 1978.
19. E.J. Miller. Damping Capacity of Pearlitic Gray Iron and Its Influence on Disc Brake Squeal Suppression. SAE Paper 690221. Presented at SAE Congress and Exposition, Detroit, 1969.
20. J.S. Rao; Stress Technology, Inc. Brake Assembly Problem Study. Washington Metropolitan Area Transit Authority, Washington, D.C., July 17, 1981.

Publication of this paper sponsored by Committee on Transportation-Related Noise and Vibration.