# Rockfall Evaluation by Computer Simulation

SHIE-SHIN WU

ABSTRACT

A 4-mi section of Interstate 40 in the western part of North Carolina is undergoing a major improvement to reduce the risk of damage caused by landslides and rockfall. A major concern is the effectiveness of measures taken to keep rockfall material out of the way of travel. By using a probabilistic approach, a model was developed for predicting the distance that bouncing rocks will travel down a slope. Field data on rock bounce characteristics were used to compute the coefficient of restitution. A computer program called "ROCKSIM" was produced to predict rockfall impact areas by using the coefficient of restitution and kinematics of free-fall and rolling motion. The ROCKSIM predictions were used to evaluate the effectiveness of the proposed remedial measure to mitigate the hazard. This preliminary application indicated that ROCKSIM may be a useful tool for evaluating the rockfall process in other areas. Additional data will be collected for model calibration.

Because rockfall and landslides pose great danger to the public traveling along mountain highways, "Falling rock" signs on these roads are common sights. Interstate 40 (I-40) in western North Carolina is the principal thoroughfare that connects North Carolina with Tennessee; therefore, an interruption of traffic flow on this road because of slope failure is a very serious problem that requires extensive manpower and money for cleanup. In 1980, the North Carolina Department of Transportation (NCDOT) initiated a project to reduce the risk of damage attributed to slope failure. A segment of I-40 that runs through Pigeon River Gorge, which averages four major landslides and rockfall accidents each year, became the subject of this intense study. Almost all of the cut slopes in the study section were unstable. This was primarily attributed to the extreme angles of the rock slopes and the disturbance of the original rock structure during construction. The problem was further compounded by water seeping into the cracks that had developed in the rocks during blasting, thereby increasing the freeze-thaw action on the weathering progression.

Because of the infeasibility of reducing the rock angle, two approaches were developed to reduce the risk of damage as a result of slope failure. The first approach was to reduce the risk of slides and rockfalls. This was accomplished by removing a few identified unstable masses, removing loose material by trimming and scaling, installing rock bolts to stabilize some of the larger rocks, and installing horizontal drains to reduce water problems. The second approach was to keep rockfall or slide material from affecting travel lanes. This was accomplished by (a) shifting the roadway 24 ft to the south (toward the river), (b) constructing rock catchment walls to stop rocks from entering travel lanes, (c) using the space generated by shifting the roadway as a rock catchment area to absorb energy, and (d) installing rock control fences to reduce the potential for rocks to roll into the highway (see Figure 1).

The total cost of implementing these risk reduction measures in this 4-mi section was $10 million. Even after this significant amount has been invested, there is no guarantee that the rockfall hazard has been completely eliminated because rock may still fall from the cut slope. In addition, the following questions need to be answered:

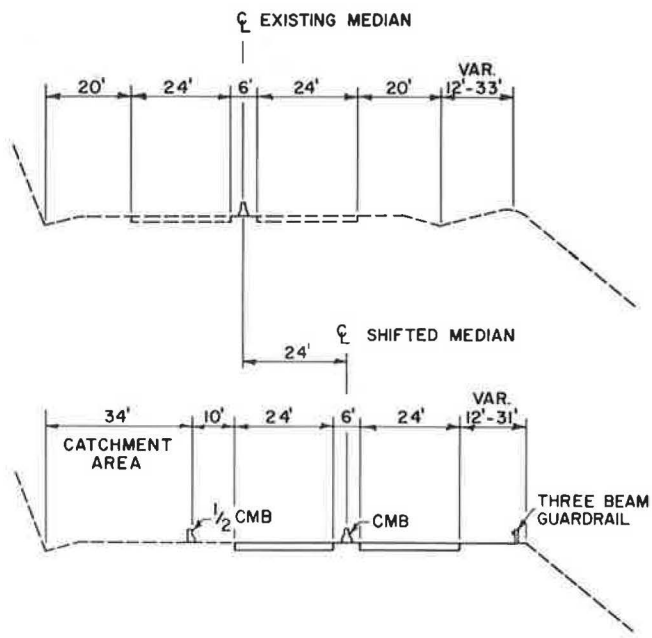


FIGURE 1 Typical section of proposed roadway shift.

1. How effective is the lane shift in eliminating rocks from entering the traffic lanes?
2. Will the concept of the energy-absorbing area be effective?
3. Where should the rock catchment walls be located?
4. How high should the rock catchment walls be?

Answering these questions requires the ability to predict the areas that would be impacted by rockfall. A research project was initiated to assess the characteristics of rockfall motion and develop a computer model to simulate these characteristics.

## ROCKFALL

In 1963, Arthur Ritchie studied rockfall motion characteristics on cut slopes in rock (1). He used a

16-mm movie camera to record rock movement. He indicated that "theoretical physics can offer a description of the motion of falling rock." He concluded that "falling rock must obey certain natural laws . . . that have been well known since Newton's time. The behavior of falling stones would lie between certain limits, limits that can be used as [a] basis for design to contain them."

In 1979, the NCDOT hired D'Appolonia to perform a rockfall analysis (2). Rocks were rolled from a bench of a presplit slope in Beaucatcher Mountain that was under construction at that time. The distances rocks traveled across the bottom of the quarry from the toe of the slope were recorded. Similar to Ritchie's observation, D'Appolonia found that rock movement was always initiated by sliding or rolling. Depending on conditions, the rocks continued to roll or took one or two bounces before becoming airborne. Rock movements were predicted by using a formula of kinematics and an assumed restitution coefficient.

From past observations, movements of falling rock can be summarized into four categories:

- rolling
- sliding
- skipping
- free-fall

All motions (except free-fall) represent gravity being resisted by friction force. It can be expressed by the kinematics formula as follows:

$$V_1 = V_o + a \times t \quad (1)$$

$$a = g \sin(\theta) - \mu g \times \cos \theta \quad (2)$$

where

$V_1$ = velocity at time t,
$V_o$ = initial velocity at time o,
a = acceleration,
g = gravity,
$\theta$ = slope angle, and
$\mu$ = coefficient of friction.

The free-fall motion can be described as a trajectory mass, and is represented as

$$V_{1x} = V_{ox} \quad (3)$$

$$V_{1x} = V_{oy} - g \times t \quad (4)$$

where $V_{1x}$ and $V_{1y}$ are the x and y components of $V_1$, and $V_{ox}$ and $V_{oy}$ are the x and y components of $V_o$.

Although wind and air resistance are neglected in these equations because of the high density of rock, the formulas can be used to provide reasonably accurate results.

## COEFFICIENT OF RESTITUTION

As a free body, the rock impacts against the slope and bounces from the surface. During this phenomenon, an exchange of momentum takes place. The bounce velocity is a function of the impact velocity, impact angle, and the type of material in the slope and the free body. The coefficient of restitution is defined as the ratio of the velocity of the free body as it leaves the point of impact to its velocity as it arrives at the point of impact. Therefore,

$$R_n = V_{rn}/V_{in} \quad (5)$$

$$R_t = V_{rt}/V_{it} \quad (6)$$

where

$R_n$ = the normal coefficient of restitution,
$R_j$ = the tangent coefficient of restitution,
$V_{rn}$, $V_{rt}$ = the normal and tangent components, respectively, of bounce, and
$V_{in}$, $V_{it}$ = the normal and tangent components, respectively, of impact velocity.

The coefficient of restitution is used to estimate the velocity of the rock as it starts the trajectory after impact. (It should be noted that no previous rockfall studies have developed coefficients of restitution.) A two-stage research project provided the required field data: the first stage was a controlled experiment on a man-made slope to generate data with preset conditions, and the second stage involved the collection of actual slope data in a typical setting.

## DATA COLLECTION

Two sets of data were collected: the first set pertains to rocks bounced on an inclined wooden platform, and the second set pertains to rocks bounced on actual rock cut slopes.

For the first test, a 10-ft x 12-ft wooden platform with 10-in. x 10-in. timber was built by the NCDOT maintenance shop in Raleigh. The platform was set under an overpass construction site where rocks could be dropped from the bridge. Figure 2 shows the set-up. From an initial velocity of 0, the rocks hit the platform and bounced. The height of free drop (H), angle of the platform ($\alpha$), time (t), and distance the rock traveled before it hit the ground (L) were recorded. Also, a movie camera was set up to record the complete movement. Rocks with different

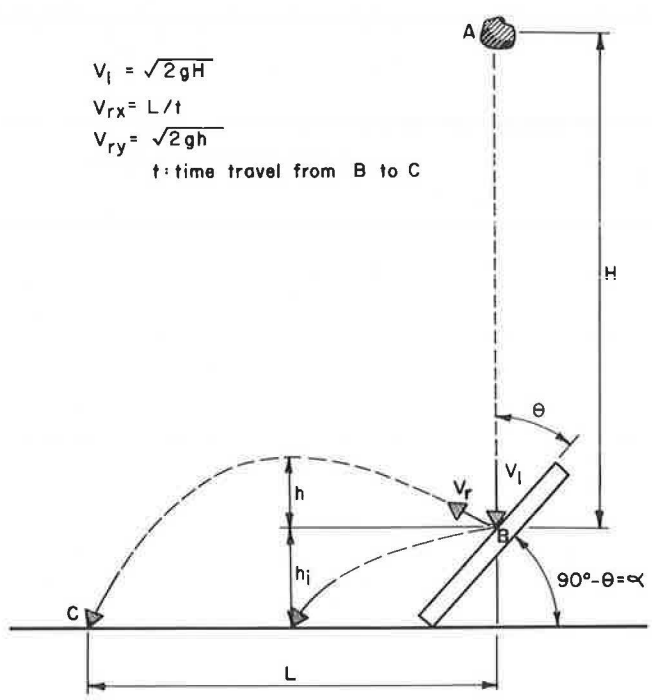


FIGURE 2 Data collection set-up.

shapes (from round to flat) and different sizes (8-in. to 18-in. diameter) were used. The platform was held by a piece of construction equipment (a front-end loader). The platform was adjusted to angles of 30, 40, 45, and 60 degrees. Thirteen rocks were dropped at each angle. If $V_o$ is assumed to equal 0, then

$$V_i = (2 \times g \times H)^{1/2} \quad (7)$$

where g is gravity and $V_i$ is impact velocity. For a free body falling vertically, $V_x = 0$, so $V_{rx} = L/t$. From the movie, the maximum height (h) that the rock bounced above the impact point can be measured by using the following equation. If $V_{2y} = 0$ at the apex of motion, then

$$V_{ry} = (2 \times g \times h)^{1/2} \quad (8)$$

In some cases, the rock rebounded with the apex of the bounce at the point of impact. A different approach was used to compute $V_{ry}$ as follows:

$$V_{ry} \times t + 1/2(g) \times t^2 = h_i \quad (9)$$

where $h_i$ is the vertical distance between the impact point and the point where the rock hit the ground. Therefore,

$$V_{ry} = (h_i - 1/2(g) \times t^2)/t \quad (10)$$

Actual measurement of rock cut slopes occurred at the site of a project under construction in the western part of North Carolina. Three rock cut slopes with angles of 28, 40, and 75 degrees were used. By use of a crane, a person was raised to a height of approximately 40 ft from which rocks were dropped onto the slope. The same procedure was then repeated for dropping rocks on a wooden platform. (The rocks used in both procedures were similar in size and shape.)

## DATA ANALYSIS

For all field data, both impact velocity ($V_i$) and rebound velocity ($V_r$) were calculated. By rotating the coordinates to axes tangent and normal to the slope, the component of velocity can be derived as

$$V_{in} = V_i \times \cos\alpha \quad (11)$$

$$V_{it} = V_i \times \sin\alpha \quad (12)$$

$$V_{rn} = V_{ry} \times \cos\alpha - V_{rx} \times \sin\alpha \quad (13)$$

$$V_{rt} = V_{ry} \times \sin\alpha + V_{rx} \times \cos\alpha \quad (14)$$

where n indicates the component of velocity normal to the slope surface, and t indicates the component of velocity tangent to the slope surface. Therefore, the restitution coefficients are as follows:

$$R_n = V_{rn}/V_{in} \quad (15)$$

$$R_t = V_{rt}/V_{it} \quad (16)$$

Velocity and restitution coefficient data for each slope angle group were found to have significant scatter. An example of these data is shown in Table 1. After the data were normalized by dividing by the group mean, a normal distribution was found on the pooled data. Surface irregularities of both the falling body and the impact surface resulted in an actual impact angle different from that of the vertically falling body on a smooth slope surface.

**TABLE 1 Computed Normal and Tangent Restitution Coefficients**

| Sample | $R_n$ | $R_t$ |
|---|---|---|
| 1 | 0.4265 | 0.6614 |
| 2 | 0.4653 | 0.6809 |
| 3 | 0.1992 | 0.6787 |
| 4 | 0.5081 | 0.6416 |
| 5 | 0.2178 | 0.7174 |
| 6 | 0.6616 | 0.9197 |
| 7 | 0.5255 | 0.7934 |
| 8 | 0.3215 | 0.7814 |
| 9 | 0.2700 | 0.6748 |
| 10 | 0.3743 | 0.4465 |
| 11 | 0.2841 | 0.5147 |
| 12 | 0.3486 | 0.5702 |
| 13 | 0.3855 | 0.8431 |
| Mean | 0.3837 | 0.6865 |
| Standard deviation | 0.1326 | 0.1303 |

Note: Wood platform and slope of 45 degrees.

Although the bounce velocity and restitution coefficient are functions of impact angle 0, the actual 0 is the result of chance because of these irregularities. Therefore, the distribution of actual bounce velocities is also a product of chance leading to the assumption of a normal distribution.

Means and standard deviations of all the slope angle groups were plotted against the impact angle. The results are shown in Figure 3. Linear regressions for mean and standard deviation of both normal and tangent restitution coefficients as a function of impact angle were calculated as follows:

$$R_n = 0.995 + 0.013\,\theta \qquad (r^2 = 0.99)$$

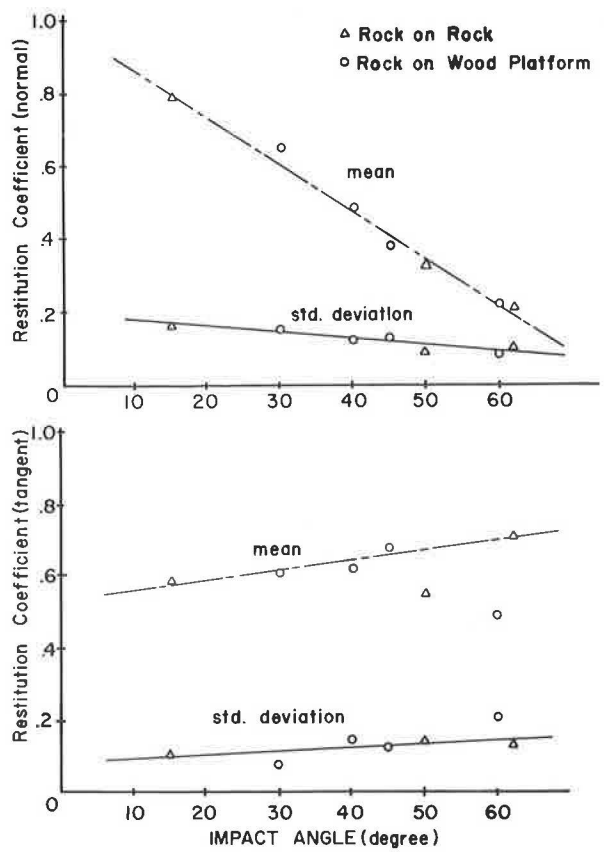


FIGURE 3 Impact angles versus means and standard deviations of restitution coefficient.

$$R_t = 0.535 + 0.028\,\theta \qquad (r^2 = 0.87)$$

$$D_n = 0.198 - 0.002\,\theta \qquad (r^2 = 0.85)$$

$$D_n = 0.65 + 0.001\,\theta \qquad (r^2 = 0.44)$$

where

$R_n$ = the mean of the normal restitution coefficient,
$R_t$ = the mean of the tangent restitution coefficient,
$D_n$ = the standard deviation of the normal restitution coefficient,
$D_t$ = the standard deviation of the tangent restitution coefficient, and
$\theta$ = the incoming angle in degrees.

For a given impact angle, the mean and standard deviation of the restitution coefficient can be computed. Because the coefficient is normally distributed, the Monte Carlo technique can be applied to obtain a probability value to estimate the coefficient.

## SIMULATION MODEL

Because of the random nature of rock bounce characteristics, a deterministic rockfall simulation model cannot fulfill the prediction purpose; therefore, a stochastic model was developed. The model was written in FORTRAN IV and was run on an IBM 3083 computer. Figure 4 shows a flowchart of the ROCKSIM model.

In the model, the cross section is represented by a sequence of straight segments. As a rock starts its motion, it can be in either a slide-roll mode or free-fall mode. The motion of the rock follows physics law as described earlier. For free-fall motion, the point of impact is calculated. The restitution coefficient is obtained by giving the impact angle to compute the mean and standard deviation of $R_n$ and $R_t$. Then, random numbers are generated and the normally distributed values for both $R_n$ and $R_t$ are calculated. These values are used to calculate the rebound velocity of the impact. The next mode of motion is determined by the direction of the rebound and the slope of the contact (impact) surface. The rock motion persists until it stops or passes the end of the section. This concludes one simulation run. (Note that because this is a stochastic model, one run represents one case of rock movement.) By using different random numbers, a group of results can be generated. The engineer is then able to use this set of data to estimate the probability that the rock stops before reaching the traffic lane. Different materials such as loose gravel and sand blanket have different energy-absorbing abilities, that is, different restitution coefficients. Therefore, different materials in the catchment area will change energy-absorbing capabilities, which, in turn, will change the outcome of the final bounce.

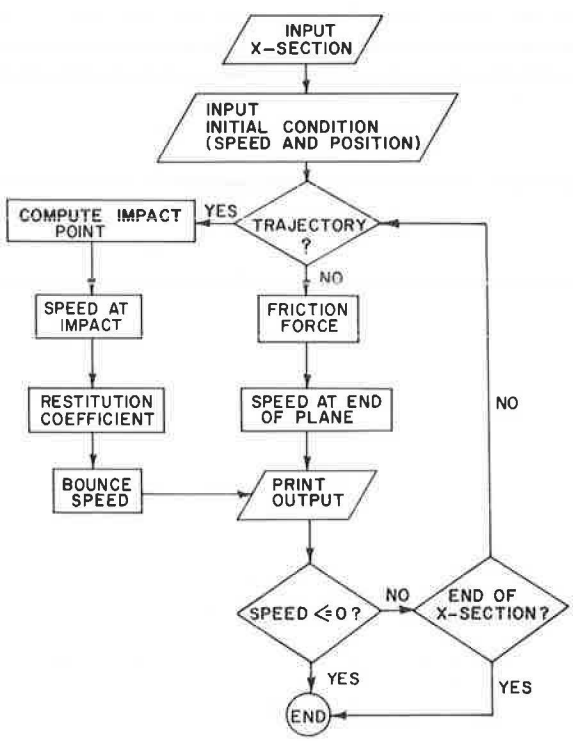


FIGURE 4 ROCKSIM flow chart.

## APPLICATION

After the ROCKSIM program was developed and restitution coefficient values from field data were incorporated, the program was used to analyze slopes along I-40 in the Pigeon River Gorge rockfall problem area (3).

NCDOT applied the ROCKSIM model to every slope segment that was determined to have potential rockfall problems. Simulation results are plotted to permit verification of the effectiveness of the proposed catchment area and the rock catch wall. A sample plot is shown in Figure 5. It was concluded that this plot "shows graphically that shifting the roadway 24' laterally will isolate the new roadway from virtually all rockfall" (3).

## CONCLUSIONS

This model can be a useful tool for engineers in predicting the motion of falling rocks. Because engineers cannot estimate what shape or size of rock will fall, a deterministic model is not particularly

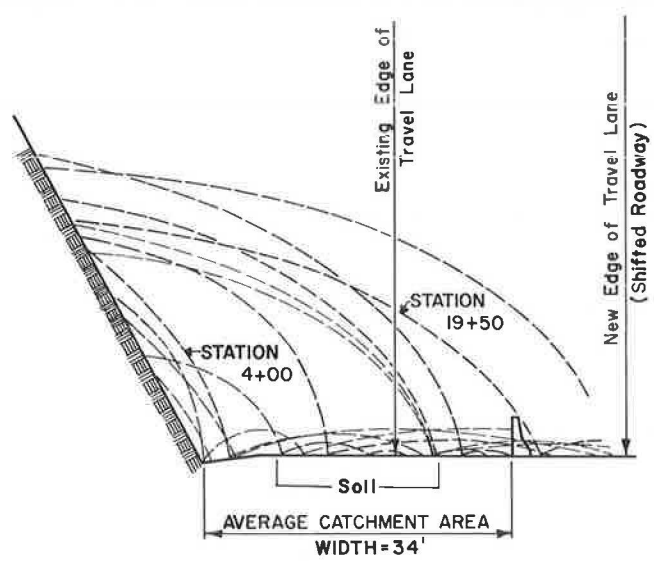


FIGURE 5 Plot of rockfall path predicted by ROCKSIM.

useful. The stochastic model described previously can be used to develop a better understanding of rockfall motion. Because of the low cost of computer time, it is possible to perform several simulation runs with different random numbers to generate a distribution of the predicted rockfall motion at a given slope segment. Depending on the number of replicates, certain levels of confidence can be achieved. These results can be used as references to determine catchment area width and rock wall location. This model could also be used to evaluate the type of material that should be placed in the catchment area to optimize the investment.

Simulation is a powerful tool for evaluating existing or proposed facilities because it can be used to generate data at low costs. However, extreme caution should be exercised when using any model. The results generated for this project should be verified as appropriate in other areas before they are relied on. As I-40 construction continues, more data will be collected to refine the ROCKSIM model.

ACKNOWLEDGMENTS

The author is indebted to many who have contributed to, and encouraged the development of, this paper. The advice and assistance of John Ledbetter and Naariman Abar of the Soils and Foundation Section of the NCDOT have been major factors in making this paper possible. L.G. Grimes' editorial assistance is also deeply appreciated.

REFERENCES

1. A.M. Ritchie. Evaluation of Rockfall and Its Control. In Highway Research Record 17, HRB, National Research Council, Washington, D.C., 1963, pp. 13-28.
2. D'Appolonia Consulting Engineers, Inc. Rockfall Analyses. North Carolina Department of Transportation and Highway Safety, Raleigh, 1979.
3. D.R. Morton. Slope Stability Problems and Recommendations for Remedial Treatment Along I-40 in the Pigeon River Gorge. North Carolina Department of Transportation and Highway Safety, Raleigh, 1981.

---



Publication of this paper sponsored by Committee on Engineering Geology.

# Stability Charts for Geotextile-Reinforced Walls

**DOV LESHCHINSKY and JOHN C. VOLK**

ABSTRACT

The results of a mathematical approach to estimate the shear failure resistance of a geotextile-retained soil wall are presented in this paper. The analytical method used is based on a limiting-equilibrium approach combined with variational extremization, and it satisfies all equilibrium requirements. The analytically derived failure mechanism consists of a log-spiral slip surface and reinforcing geotextile sheets positioned orthogonally to the radii defining it. A closed-form solution is obtained that provides complete insight into the problem's behavior. The results indicate that (a) as the geotextile tensile strength increases, the extent of the critical slip surface increases, (b) as the geotextile strength increases, the compressive stress over the critical slip surface also increases, (c) as the geotextile strength increases, the magnitude and extent of tensile normal stress that tends to develop near the top decreases, and (d) when frictional soil is concerned, the strength of the geotextile at the bottom is mobilized the most. The end products are design charts that can easily be applied to a particular problem. The charts indicate that reinforcement may significantly increase the stability of a wall (or slope) depending on the geotextile's tensile strength, the soil's strength properties, and the inclination of the structure face.