ment of Deteriorating Wood Bridge. Engineering Field Notes, Vol. 15, Forest Service, U.S. Department of Agriculture, July-Sept. 1983, pp. 33-43.
121. B. Roberts, M.B. Scott, and C.F. Scholer. Minor Maintenance Manual for County Bridges. Publication H-84-10. Purdue University, West Lafayette, Ind., Aug. 1984.
122. R.O. Foschi. Reliability of Wood Structural Systems. Journal of Structural Engineering, Vol. 110, No. 12, ASCE, Dec. 1984, pp. 2995-3013.
123. Important Research Needs in Wood as a Structural Material. Journal of the Structural Division, Vol. 105, No. ST10, ASCE, Oct. 1979, pp. 2069-2089.
124. Timber Bridge Technology Transfer Plan. Forest Products Laboratory, U.S. Department of Agriculture, Madison, Wis., 1984.
125. Glulam Wood Bridge System--Technical Manual. Weyerhauser Company, Takoma, Wash., 1980.

The information contained in this paper reflects the views, opinions, and conclusions of the authors, and does not necessarily represent those of the Forest Service, U.S. Department of Agriculture. This material was developed, written, and prepared by employees of the U.S. Government; therefore, it is in the public domain, and private parties or interests may not hold copyright for this material.

Designing Timber Bridges for Long Life

FRANK W. MUCHMORE

ABSTRACT

Wood is a marvelously adaptable structural building material. When treated with a compatible preservative to prevent early decay deterioration, it is an economical and practical structural material for many short-span bridges (spans in the range of 15 to 60 ft). Timber's inertness to deicing chemicals, as well as some new design developments, such as glued-laminated deck panels and prestressed laminated decks, make it more attractive than ever for use in highway structures. Important factors in assuring long, useful lives for timber bridges include designing to avoid water-trapping details, use of effective and compatible preservative treatment, and following a systematic inspection and maintenance program. Attention to these factors will provide a lifespan that is competitive with other structural materials, such as steel and concrete, and will, in most cases, dramatically increase the useful life of timber bridges.

Timber bridges are remarkable structures--when properly designed, built, and maintained, they can (a) carry heavy loads without showing material fatigue, (b) resist the deteriorating action of deicing chemicals, (c) be constructed by unskilled labor, and (d) last for long periods of time. Timber is particularly adaptable to short-span bridges (spans up to 60 ft) and can be economically designed to carry heavy highway loads. For example, some timber bridges in western Canada routinely carry logging trucks and machinery weighing in excess of 100 t.

Wood was one of man's first building materials. However, as modern technology has yielded its wonders in mass-produced steel, aluminum, concrete, and plastic construction materials, wood has been largely overlooked as a primary structural material for bridges. Wood is still a marvelously adaptable structural material. For example, structural wood

Northern Region, P.O. Box 7669, Forest Service, U.S. Department of Agriculture, Missoula, Mont. 59807.

- Is simple to fabricate,
- Is lightweight and easy to install,
- Has a high strength-to-weight ratio,
- Has excellent sound and thermal insulation properties,
- Has good shock resistance,
- Is immune to deicing chemicals,
- Has unique aesthetic qualities,
- Is a renewable resource,
- Is long-lasting (when properly protected), and
- Has good fire resistance (1).

Note that the unusual claim of good fire resistance of structural timber is well founded. When a large structural timber is exposed to fire, there is some delay as it chars and eventually flames. As burning continues, the charred layer has an insulative effect, and the burning slows to an average rate of about 1/40 in. (0.6 mm) per min [or 1-1/2 in. (38 mm) per hr], for average structural timber species. This slow rate of fire penetration means that timber structural members subjected to fire maintain a high percentage of their original

strength for considerable periods of time (2). In contrast, structural steel becomes plastic when exposed to a heat of 1,000°F and it yields almost immediately.

In addition, structural wood is economical. A number of Forest Service bridge construction projects in Montana and Idaho during 1984 and 1985 involved competitive bids for treated timber bridges versus bids for equivalent concrete bridges. At least four timber bridge contracts were awarded.

Many of the covered wood bridges built during the eighteenth and nineteenth centuries have been used for more than 100 years (3). Modern developments and techniques have advanced wood technology significantly since the days of the covered bridges. The widespread use of glued-laminated members, availability of effective preservative treatments, epoxies, and new prestressing techniques are but a few of the developments. Blending the old and new technologies, coupled with knowledge design, construction, inspection, and maintenance practices, is indeed bringing a new popularity to timber bridges (1), and under proper conditions, wood will literally give centuries of service. If it can be protected from organisms that degrade wood, its longevity is remarkable (2). Some techniques and processes to achieve this protection are covered in this paper.

ADVANTAGES OF USING WOOD

As a structural material, wood has the many advantages previously enumerated and comparatively few disadvantages. Dr. John F. Levy of the Imperial College of Science and Technology, London, eloquently states wood's major disadvantage: "As far as a fungus is concerned, wood consists of a large number of conveniently oriented holes surrounded by food" (4). The key to overcoming this major disadvantage of wood as a structural material is to make it inedible to decay fungi and microorganisms and to wood-boring insects and marine organisms. The use of wood preservatives simply forms a protective shell (Figure 1) that renders the wood unpalatable or toxic to all these little "critters." It is important, however, to use compatible woods and treatment methods. Compare the protective shell shown in Figure 2 with that shown in Figure 1. Certain species (and subspecies) do not accept preservative treatment as well as others. Care must be exercised to specify species and treatment methods that will give satisfactory results.

Treatment with the proper preservative process dramatically increase the useful life of wood exposed

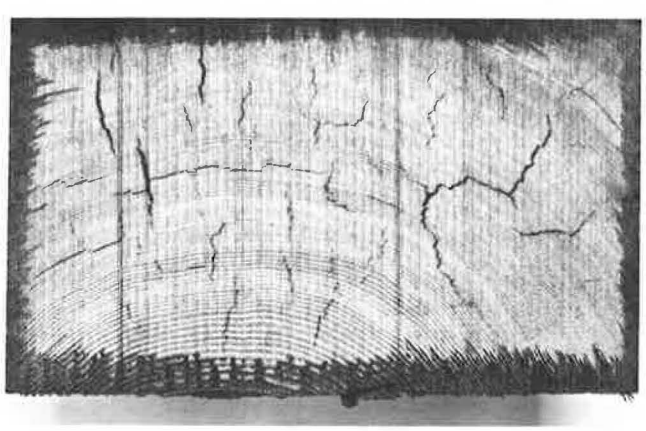

FIGURE 1 Sawed cross section of a pressure-treated coast region Douglas fir bridge stringer.

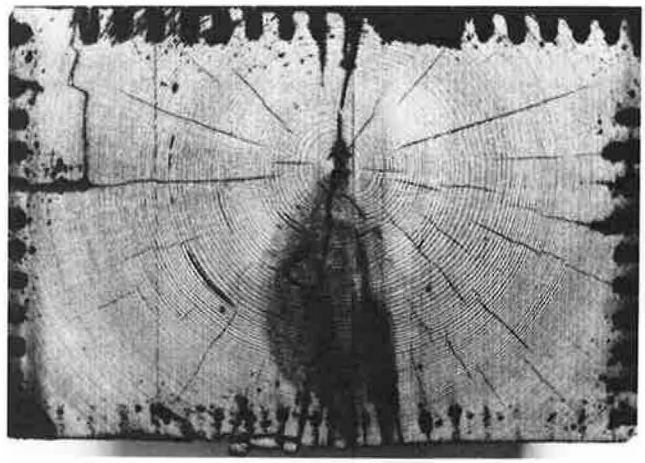

FIGURE 2 Sawed cross section of a pressure-treated inland region Douglas fir bridge stringer.

to the elements. For example, Richardson (4) states that in temperate climates, a normal transmission pole pressure treated with creosote will have a typical life of 45 to 60 years, whereas an untreated identical pole will last only 6 to 12 years. A similarly treated railroad tie can be expected to last more than 35 years, in comparison to 8 to 10 years for untreated wood.

Richardson (4), in discussing the advantages of preserved wood, states:

> Preserved wood must be regarded as an entirely new structural material and must not be considered as just an improved form of wood, as it can be used in entirely different circumstances and certainly in more severe exposure situations. The most obvious advantage of preserved wood is that it can be used with impunity in situations where normal untreated species would inevitably decay, but it may be argued that, in many situations, this is a property that it enjoys together with many competitive materials. In fact, the use of wood has many advantages. It is extremely simple to fabricate structures from wood and, even in the most sophisticated production processes, the tooling costs are relatively low compared with those for competitive materials. Wood is ideal if it is necessary to erect an individual structure for a particular purpose but is equally suitable for small batch or mass production. When these working properties are combined with the other advantages of wood, such as its high strength-to-weight ratio, its excellent thermal insulation and fire resistance, its immunity to deicing chemicals, and the unique aesthetic properties of finished wood, it sometimes becomes difficult to understand why alternative materials have ever been considered! However, there is one feature of wood which is unique amongst all structural materials; it is a crop which can be farmed, whereas its competitors such as stone, brick, metal and plastic are all derived from exhaustible mineral sources.

With all these varied advantages, structural timber exposed to the elements, but properly selected and preserved, can give satisfactory service for 50 years and, in some cases, far longer, and at costs that are

competitive with other structural materials, such as steel and concrete. Indeed, there is no reason why well-designed and maintained timber bridges could not survive more than 100 years, as have the previously mentioned covered bridges.

CAUSES OF WOOD DETERIORATION

Decay is by far the most prevalent cause of wood deterioration. However, wood-boring insects and marine organisms will also attack unprotected wood.

Decay in wood is caused by living fungi, which are simple plants that have the capability to break down and use wood cell wall material for food. Infections of decay fungi are often indicated by the presence of "fruiting bodies," mushroom-like, or shelf- or hoof-shaped projections of flat, leathery material commonly found in partially enclosed or sheltered areas, as is shown in Figure 3. Decay fungi are propagated by germination of fungus spores, which are functionally equivalent to the seeds of higher plants. These spores, produced in massive numbers, are microscopic. The spores are distributed so widely by wind, insects, and other means that they are commonly present on most exposed surfaces throughout the world (2).

Most of these spores never germinate for lack of a favorable environment. All of the following conditions must exist in order for decay fungus growth to take place:

1. A sufficient oxygen supply,
2. A favorable temperature range [32°F (0°C) - 90°F (32°C)],
3. An adequate food supply (wood cells), and
4. An available water source [i.e., moisture content must be above the fiber saturation point, or approximately 30 percent for most species (2)].

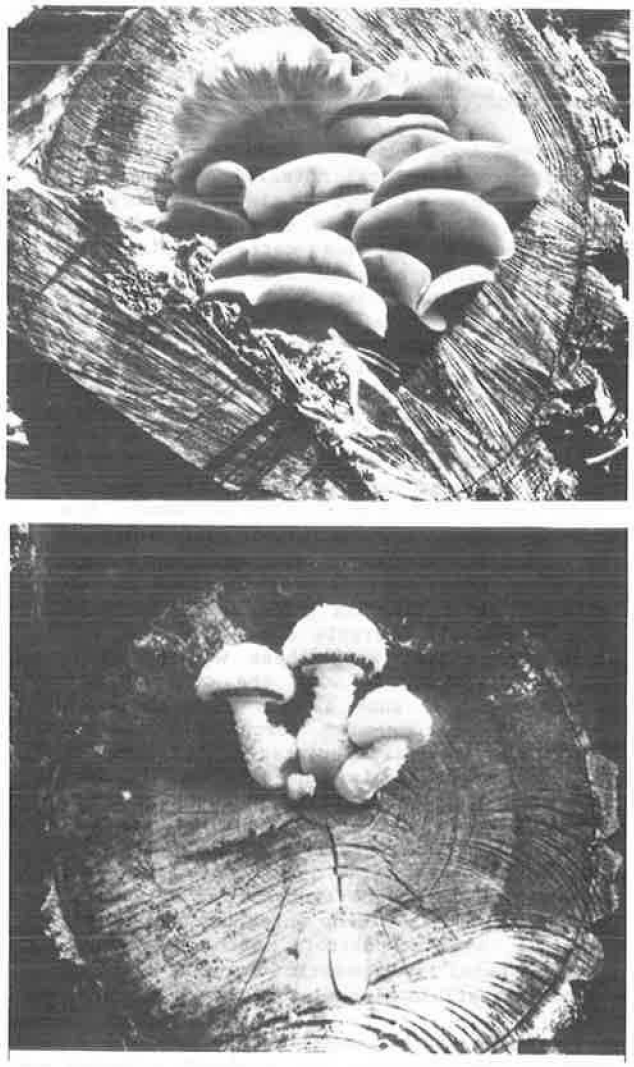

FIGURE 3 Examples of decay fungus fruiting bodies in growing or fresh condition.

Once established, the decay fungi continue to grow at an accelerating rate as long as favorable conditions prevail. Depriving the fungus of any one or more of these required conditions will effectively curtail the spread of decay. Proper preservative treatment effectively provides a toxic barrier to the decay fungi's food supply, thus preventing decay.

Wood that is kept dry (moisture content below the fiber saturation point), or saturated will not support the growth of decay fungi. The unusually long useful life of the covered wood bridges of the eighteenth and nineteenth centuries can be primarily attributed to keeping the wood dry.

When wood is kept at a moisture content below the fiber saturation point, there is insufficient available water to support the growth of the decay fungi. Conversely, wood kept completely and continuously saturated with water will not support the growth of decay fungi, because a sufficient supply of oxygen is not available. However, care must be taken when wood is used in a marine environment. Marine borers, which can quickly perforate wood that is immersed in sea water, become a major hazard unless the wood is properly preserved.

A common misconception is the use of the term "dry rot," which erroneously carries the connotation that dry wood will rot or decay. Even the growth of dry-rot fungi (Merulius lacrymans) requires that the wood have a moisture content above the fiber saturation point. Wood maintained at a moisture content below fiber saturation can be considered safe from decay hazard including dry rot.

TECHNIQUES FOR CONTROLLING MOISTURE

Control of moisture is probably the most cost-effective and practical general technique for extending the service life of new and existing timber bridges. This protective measure undoubtedly contributed significantly to the exceptionally long service life (more than 100 years in some cases) achieved by many of the old, covered wooden bridges. However, in most of the more modern timber bridge designs, preservative treatments have been relied on to control decay, and the older principle of keeping water away from the structural members in the first place is given little (or no) emphasis (1).

Timbers that develop seasoning checks, sometimes after installation, increase the decay hazard significantly. Seasoning checks normally open in the radial direction from the heart (or pith) of the tree. If the heart can be excluded from the structural member, the number of potential seasoning checks is significantly reduced. A specification that boxed-heart members will not be acceptable will accomplish this, although the material price may be increased by 10-15 percent. Glued-laminated members should be used where practical. There will be far less shrinkage and formation of seasoning checks in the individual laminations than in a solid member of the same dimensions. However, it is important to specify the use of waterproof glue for exterior use applications.

Some attempts to control moisture have proven detrimental (1). Examples are

1. Roll roofing material as a water-diverting cover on caps, stringers, and pile or post tops. As the roofing material ages, it dries out and becomes permeable to water from above. More harm than good may be done by using this type of material because it tends to trap moisture and inhibits drying, thus promoting decay.

2. Sheet metal covers between pile or post tops and overlying stringer support caps are also of questionable value. The metal covers are usually installed before the timber cap is placed. When drift pins are driven down through the cap into the pile or post top, the metal cover is punctured and dimpled, creating a funnel for trapped water to enter the pile top and run down the drift pin past the treated top surface into the unpreserved inner wood. Again, the metal also inhibits drying, thus setting up a "double-jeopardy" situation for a high moisture content in untreated wood, which is one of the conditions conducive to the growth of decay fungi. Some results are shown in Figure 4.

FIGURE 4 Sheet metal caps between pile tops and stringer support caps may increase decay hazard.

3. Sheet metal caps on exposed pile or post tops as shown in Figure 5, are also generally regarded as contributing to early decay. Exposed metal caps also attract vandals who cannot resist punching holes in the metal caps with sharp objects or bullets. The net result again is the creation of funnels for water entrance, while inhibiting the drying of the pile or post top. An effective design criterion for the promotion of good drainage is to slope the exposed tops of posts and other water-trapping places.

More effective moisture-proofing requires the use of bituminous or asphaltic mastics in lieu of sheet-metal or roll roofing material as end-grain coatings, joint fillers or seals, and check-filling compound.

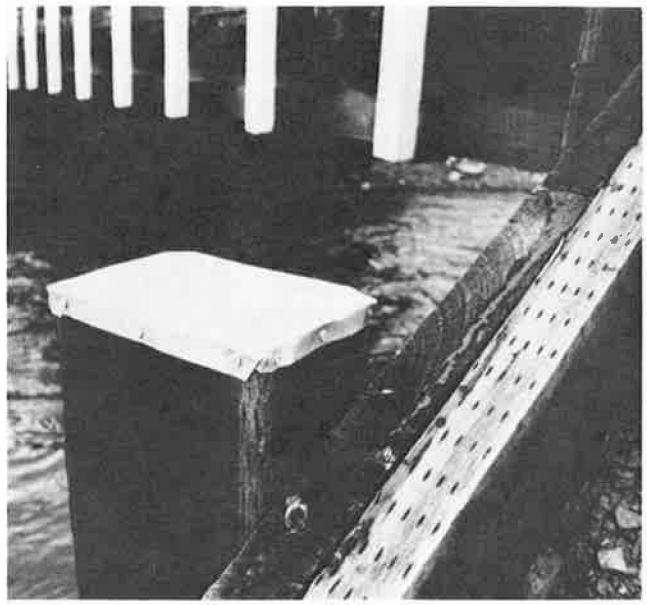

FIGURE 5 Sheet metal caps on exposed pile or post tops may become punctured and funnel water into pile top.

Care must be taken not to form water-entrapment areas under such coatings. It is also important that the end-grain or freshly cut surfaces be protected by a wood preservative before the application of the mastic. Also, since petroleum compounds can dry out, lose their elasticity, and eventually crack, an effective maintenance program will, where feasible, include reapplication (1).

The designer should try to avoid using details that will trap moisture, soil, or other debris, which create conditions conducive to decay. Also, field fabrication of wood members (cuts, holes, daps, etc.) should be held to an absolute minimum because field treatment (flooding, spraying, brushing) is not nearly as effective as in-plant pressure treating after fabrication takes place. The control of moisture access to the structural members should be of primary concern. The principle of the covered bridges should be remembered.

Perhaps the most effective and practical method for controlling moisture on most wood bridge designs is to prevent water passage through the deck. In effect, make the bridge deck an impervious roof over the supporting stringers. If the timber deck is sufficiently rigid and stable, a well-maintained asphalt mat (usually at least 3 in. thick) with a moisture-barrier membrane, crowned to aid drainage, can be quite effective (1).

There are several feasible alternatives to consider in the production of a stable timber bridge deck (1). For example, the use of treated glued-laminated timber panels for decking is quite effective when the laminates are oriented parallel to the bridge ends. Besides providing a more rigid support for asphalt mats than conventional nail-laminated decks, glued-laminated deck panels are produced at a moisture content of about 12 percent and will thus be subject to little shrinkage during service, helping to minimize crack formation in the mat (5). Figure 6 shows glued-laminated panels being installed.

Experience has shown that reflective cracking of the asphalt mat usually occurs over the glued-laminated panel interfaces, particularly when the girder spacing is more than 4 ft (1.2 m). This may not be detrimental to the panels, since in the original development of deck panels, the "treatment" was con-

FIGURE 6 Glued-laminated deck slabs being installed as a replacement deck on a 12-year-old bridge.

sidered the moisture barrier, not the asphalt. However, leakage at the panel interfaces will create undesirable wetting of the girders and probably create unsightly stains on the exposed girder faces.

The placement of a geotextile fabric mat as an underlayment for the asphalt mat may help prevent the reflective cracking. The fabric must be tacked down to the deck surface with liquid asphalt, then the asphalt mat is placed by normal methods. The Forest Service has placed fabric experimentally on several bridges (6), but no conclusive results have been documented to date.

Another product that may have promise as a wearing surface and roof is elastomeric concrete. Developed in France for installing expansion joints in concrete decks, it is also used as bridge deck surfacing for orthotropic steel deck bridges. It is expensive [$5.00 to $10.00 per square foot ($54.00 to $108.00 per square meter)] and somewhat difficult to install in the field, as it requires a heat vulcanizing process. It may be more practical if it is installed in the plant, on glued-laminated deck panels, for instance.

Another technique for reducing moisture penetration and producing a stable deck surface is to "prestress" (or "post-tension") a laminated timber deck (7). The prestressing force is applied by installing the prestressing bars through predrilled holes at mid-depth of the laminates. Steel channel bulkheads and anchorage plates are used to anchor the prestressing bars (see Figure 7).

This system allows prestressing (posttensioning) of either longitudinally laminated or transverse laminated decks. Transverse laminated panels can be prefabricated in the shop with steel plant bulkheads at the joining ends of the panels and can be made as large as practical for handling and transportation. When installed, the panels are prestressed together by using high-strength bar couplers between panels and jacking against the steel plate bulkheads in a manner similar to segmental concrete construction. Prestressed transverse laminated decks as long as 150 ft (46 m) and longitudinally laminated decks as long as 400 ft (122 m) have been continuously tensioned by this method in Canada.

For rehabilitation of an existing nail-laminated deck, the prestressing force is applied perpendicular to the laminates by a system of high-strength bars located above and below the deck. These bars are attached to heavy steel anchorage plates bearing against a steel channel to form a strong, flexible clamping system (see Figure 8). Then the top bars

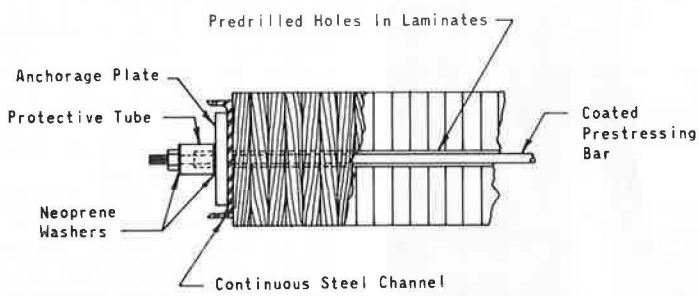

FIGURE 7 Prestressing system for new construction (courtesy of Ministry of Transportation and Communications, Ontario, Canada).

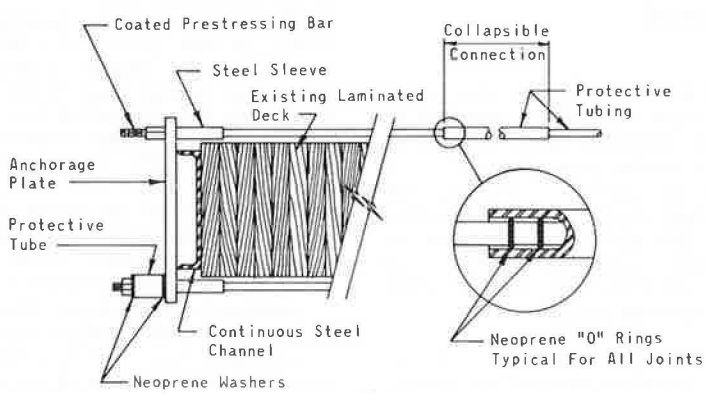

FIGURE 8 Prestressing system for rehabilitation (courtesy of Ministry of Transportation and Communications, Ontario, Canada).

are embedded in the asphalt mat. This rehabilitation system is most adaptable to longitudinally laminated decks (laminates running parallel to the roadway centerline) and perhaps short transverse laminated decks (laminates perpendicular to roadway centerline).

The prestressed timber deck system was developed and tested in Canada by the Research and Development Branch of the Ontario Ministry of Transportation and Communications, and has been successfully used for a number of rehabilitation projects and new bridges there, as well. More detailed information can be found in Taylor et al. (7).

DESIGN CRITERIA FOR MAXIMIZING SERVICE LIFE

Designing a timber bridge for the longest practical life demands attention to details. The designer must be constantly aware that wood is in the "danger zone" for decay hazard whenever the moisture content is between fiber saturation (approximately 30 percent for most species) and fully saturated (100 percent). Details that do not trap moisture, and that allow free drainage of rainwater are highly desirable.

The following is a summary of some of the more important items to be considered by the designer:

1. Only wood species (or subspecies) that are sufficiently permeable to permit the penetration and retention of preservative required by an accepted standard should be used, such as American Wood Preservers Association (AWPA) standards C1, C2, and C28. Avoid species or subspecies that are difficult to treat. Guidance for species treatability is avail- able from the Forest Products Laboratory, P.O. Box 5130, Madison, Wisconsin 53705.

2. Oil-borne pressure preservative treatments (pentachlorophenol, creosote) are generally more satisfactory for bridge timbers than waterborne treatments. There are several reasons for this. Among them are

- Material treated with waterborne preservatives frequently have a higher internal moisture content as a result of the treatment process. Thus, they are subject to more drying shrinkage, checking, and splitting.
- Oil-borne treatments leave a residual of oil on and near the surface, which provides a measure of waterproofing (depending on the oil used). The moisture content, after treating, is typically lower than for waterborne-treated material, which tends to minimize drying shrinkage, checking, and so forth.

3. Fabricate all timber completely and accurately (holes, cuts, daps, etc.) before treatment with preservative to assure a complete protective envelope (see Figure 9). Avoid field fabrication (drilling and cutting) after treatment. When field fabrication or repair of damaged treated members is necessary, field treatment should be done in accordance with accepted standards, such as AWPA M-4. Remember that field treatment is not nearly as effective as in-plant pressure treatment.

4. Avoid design details that trap water, dirt, or other debris (see Figure 9).

5. To minimize the development of seasoning checks, which can expose untreated wood to decay hazard, avoid using timbers that have "boxed-heart," that is the heart (or pith) of the tree is contained within the member (see Figure 9).

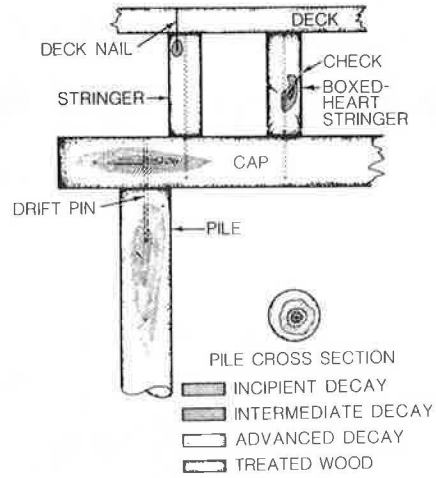

FIGURE 9 Schematic diagram of a portion of a pile bent, stringers, and deck showing locations where decay is most likely to occur.

6. Use glued-laminated members (waterproof glue) where practical, which are produced from kiln-dried lumber, typically at moisture contents of around 12 percent. Drying shrinkage, checking, and splitting are minimized.

7. Avoid using roll roofing or sheet metal caps on stringers, pile, or post tops. Their use can increase decay hazard by inhibiting the drying of the wood.

8. Made the bridge deck an impervious "roof" over the supporting stringers. Asphalt mats (with membrane), glued-laminated panels, or prestressed timber decks can be effectively utilized.

REFERENCES

1. F.W. Muchmore. New Life to Timber Bridges. Handbook of Civil Engineering. Technomic Publishing Co., Hasbrouk Heights, N.J. (forthcoming).
2. Wood Handbook. Agriculture Handbook 72, U.S. Department of Agriculture, 1974.
3. Committee on History and Heritage of American Engineering. American Wooden Bridges. ASCE Historical Publication 4, ASCE, New York, 1976.
4. B.A. Richardson. Wood Preservation. The Construction Press, Lancaster, England, 1978.
5. W.E. Eslyn and J.W. Clark. Wood Bridges--Decay Inspection and Control. Agriculture Handbook 557, U.S. Department of Agriculture, 1979.
6. R.A. Faurot. Use of Geotextiles as Bridge Paving Underlayment. Engineering Field Notes, Vol. 16, Forest Service, U.S. Department of Agriculture, Feb.-March 1984.
7. R.J. Taylor et al. Prestressed Wood Bridges. Report SRR-83-01, Ministry of Transportation and Communications, Ottawa, Ontario, Canada, 1982.