A Prefabricated Modular Timber Bridge

J. D. PARRY

ABSTRACT

Part of the research program of the Transport and Road Research Laboratory in the United Kingdom is the study of road transport problems in developing countries. The unit that specializes in this work has carried out an assessment of a new design of timber bridge. It is a truss type made from prefabricated panels and is appropriate for use in countries that need low-cost bridges, but have only a supply of relatively small-section timber. The design is now being developed and promoted in Honduras, Madagascar, and other countries by the Timber Research and Development Association under sponsorship by the United Kingdom and United Nations Industrial Development Organization.

There are few areas of the world that are not now open to road transport. Its importance in the developing world has increased to the point where the economic and the social order are dependent on it, as they are in the western world. The creation and maintenance of a road network is extremely costly for countries that have little to export, so they are obliged to use as much as their own indigenous resources as possible, both in the road pavements and in the bridges. This has led to a variety of different bridge designs using different materials around the world. The Chinese are known for their concrete arch bridges. Several Bailey-type steel frame bridges still exist in areas where they were used as temporary bridging by armies in times of war. Timber bridges are found everywhere, but the type of timber available and the ability of the constructors have led to the development of different types of timber structure.

The most primitive (and still the most common) is the simple beam, which can take the form of a pedestrian bridge or may be used in multiple forms as a highway bridge.

The cantilever, although not as old as the beam, has also been in use for many centuries, as a bridge for pedestrians and pack animals, and, more recently, for motor vehicles.

Timber trusses, although they played such an important role in the United States during the last century, are not well known in developing countries today. This seems strange at first because the pioneering work is complete. However, Howe, Warren, Town, and others developed sound designs and proved their worth by building bridges, some of which have lasted more than a century. Each bridge, however, required the personal attention of a competent engineer. In developing countries today, trained men are usually responsible for all the engineering projects in a large district. It is understandable that they prefer the simpler, if more expensive, technology using concrete and steel prefabricated parts for their bridges.

It is rare today in developing countries to find a timber bridge on a trunk road. Even where the vertical alignment and waterway permit short spans, more permanent materials are preferred for the high investment roads. This is not always justified, however, because many of the roads are designed for a 20- to 25-year life, after which time extensive rehabilitation would be required or a new road would be built. A timber bridge could serve without extensive maintenance for at least that time.

New timber bridges are generally confined to the rural access roads. These roads are usually surfaced with gravel and built to a basic standard for low-volume traffic. They provide the link between grower and market and promote many forms of contact between town and country, improving communications for purposes of education, administration, mobility of labor, and tourism. These roads serve groups of villages or large, sparsely populated areas, whose economy has now changed and come to depend on them. When an emergency occurs, such as an epidemic or a famine, they can literally become the lifeline of the people.

Bridges are built on these roads only if drifts, causeways, and culverts are not able to provide water crossings for most of the year. Reinforced concrete is used if there is no local timber. Spans are short to keep the technology simple, even if this means that piers are required. All too often they are built to cope with the normal flow, and fail when high water carries away the deck or damages the abutments. Consequently, timber bridges tend to be found on the less trafficked roads, away from the centers of civilization--on the type of road that can make up 80 percent or more of a developing nation's network. The bridges are frequently uncounted and almost never maintained in a systematic manner. Described in this paper is a new design of timber bridge suitable for use on these rural access roads.

A PREFABRICATED MODULAR TIMBER BRIDGE

There is still a great need for low-cost bridges in many countries, and today there is far less large-section timber available, especially of the hard woods, to make long beams. Bridges are required that use small-section timber and the faster growing soft woods are more commonly and cheaply available now--even from areas that traditionally provided hard woods. Truss-type structures answer the requirement and many fine truss designs came from Europe and particularly the United States in times past, but they have not proved altogether suitable for developing-country conditions.

Because of this, a new design of modular truss form was developed in Nairobi, Kenya. The early work was sponsored by the United Nations Industrial De-

Overseas Unit, Transport and Road Research Laboratory, Crowthorne, Berkshire, England.

FIGURE 1 The 4-truss bridge at Nyeri.

velopment Organization (UNIDO) and a few of these bridges were built in Kenya in the 1970s. A report on the design was published in 1981 by the Transport and Road Research Laboratory (1) in the United Kingdom, after extensive examination and some development of the original work. Then, the Timber Research and Development Association (TRADA) took it up (2) and has promoted its development in several countries, under sponsorship from the British government and UNIDO.

The purpose of this project was to provide relatively cheap bridges to carry light commercial traffic in rural areas. The design that emerged requires largely semi- and unskilled labor and has the advantage that the bridges can be erected quickly and, if necessary, can be dismantled and reerected elsewhere. As with the Bailey-type bridge, there is one basic unit, which is reproduced and stored in readiness for use and can be used to build bridges of various spans and load-carrying capacities.

GENERAL DESCRIPTION

The bridge is a truss type, with the road deck carried on top of the trusses (Figure 1). The upper chords of the trusses, the verticals, diagonals, bracings, and deck are all constructed from timber. The bottom chords and the joints were designed to be made from mild steel.

Each truss is assembled from a number of identical frames (Figure 2), and is prefabricated and transported to the site together with the bottom chords. The frames are made of rough, sawed boards that are 50 mm thick, and are dowelled and nailed together to form an inverted triangle 3-m long with a vertical brace. They weigh about 140 kg each and are all made in the same manner. The frames fit end-to-end with steel or timber bottom chords (Figure 3) to form the trusses. An even number of parallel trusses is required, depending on the load capacity, the span of the bridge, and the quality of the timber. Design tables have been prepared using British and American loading standards and a large variety of timber types. As an example, the following table gives the number of trusses required when using East African cypress wood. Practical considerations limit the number of frames in a truss from 3 to 10.

	Span (m)					
Loading Duty	12	15	18	21	24	27
HA	6	8	-	-	-	-
H20-44	4	4	6	6	8	-
H10-44	2	2	4	4	4	6

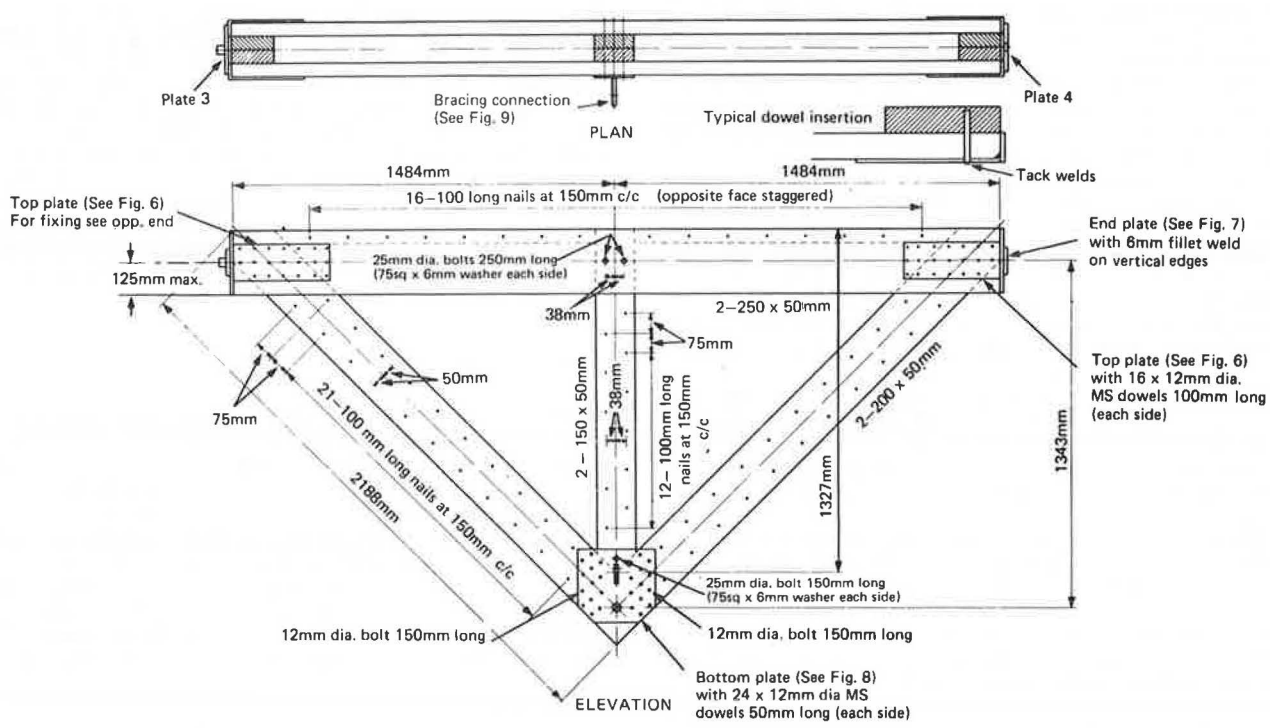

FIGURE 2 Frame assembly.

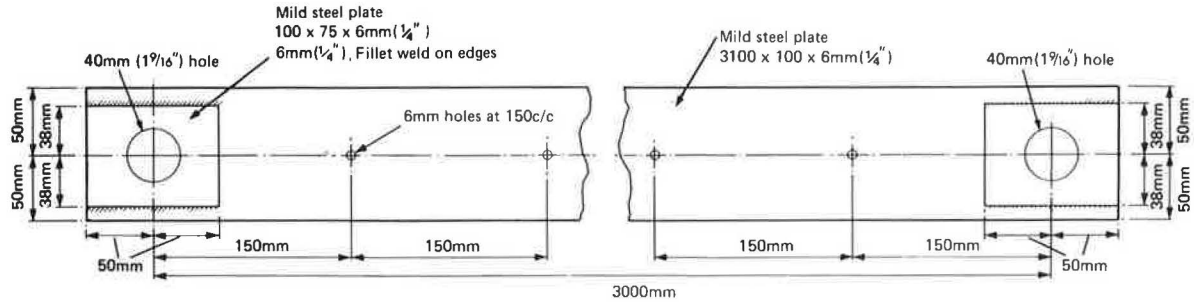

FIGURE 3 Bottom chord.

The trusses are connected by the timber deck (or transoms) and diagonal bracing members (both vertical and horizontal) between the trusses (Figure 4). Longitudinal running boards are nailed to the transoms. At their ends, the trusses are supported by angle brackets (Figure 5), which act as the bridge bearings. Stone, concrete, brick, or timber abutments may be used to support the brackets.

The main features of the design are as follows:

1. Local timber can be used;
2. The design is easy to fabricate;
3. The largest component measures 3 x 1.5 m and is light enough to be manhandled;
4. All the frames are identical and so may be made on a jig in a workshop, where inspection of the quality and finish is easier;
5. The cost is much lower than that of a steel or concrete bridge with similar loading capacity; and
6. It is usually limited to spans from 9 to 24 m.

Steel dowels are used to join the timber members at each corner of the frame. The two top joints are identical, each consisting of two steel plates (Figure 6), one on each side, through which the dowels pass, penetrating through the horizontal timber member and then into the diagonal (see Figure 2). There is no connection through the joint but the two top steel plates are joined when the end plate (Figure 7) is welded across them (a male end plate at one end of the frame and a female at the other). At the ends of the trusses, these end plates mate with the bridge bearings.

In the bottom joint, the two diagonal members are not joined directly by the dowels but each is dowelled to a bottom plate (Figure 8). Again, similar plates are used on each side of the joint and dowels are driven through them and into the timber from each side (see Figure 1).

In service, the horizontal top chords (A) (in Figure 9) are always in compression because of the residual weight and the applied load, whereas most of the diagonal members (B) are in compression or tension according to the position of the load. On the end frames of each truss, one diagonal member (C) is in permanent compression--and the other (D)

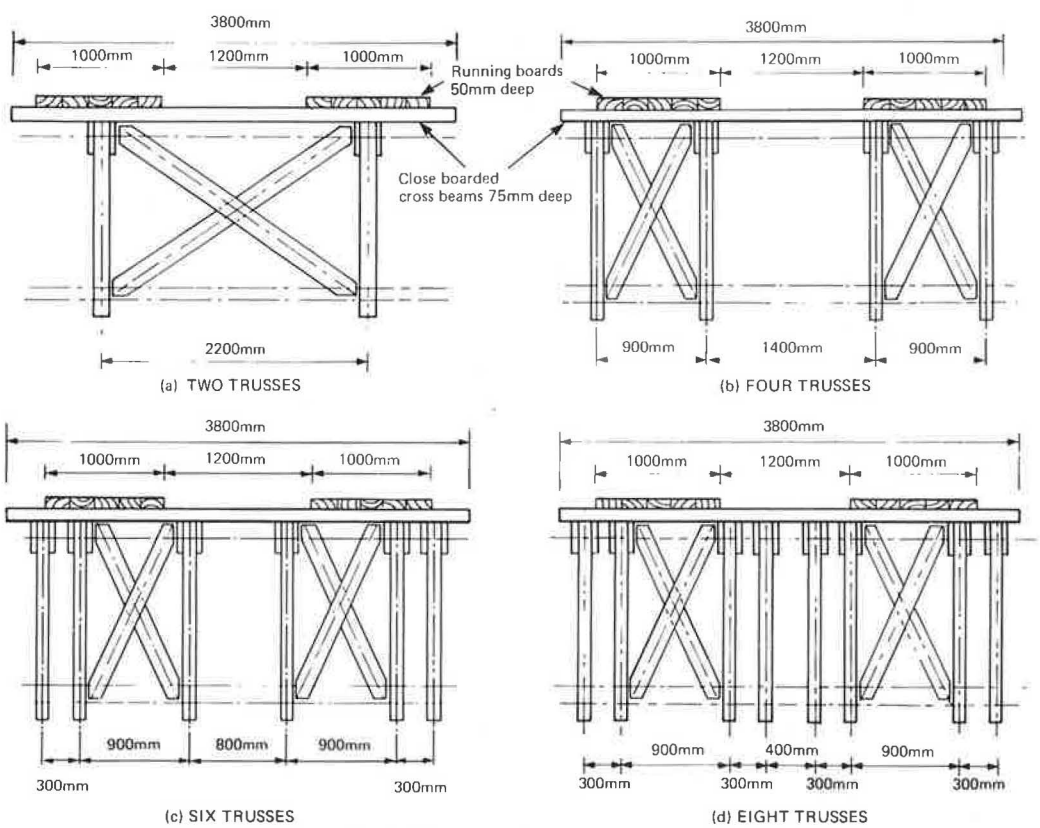

FIGURE 4 Typical cross-sections using (a) 2 trusses, (b) 4 trusses, (c) 6 trusses, and (d) 8 trusses.

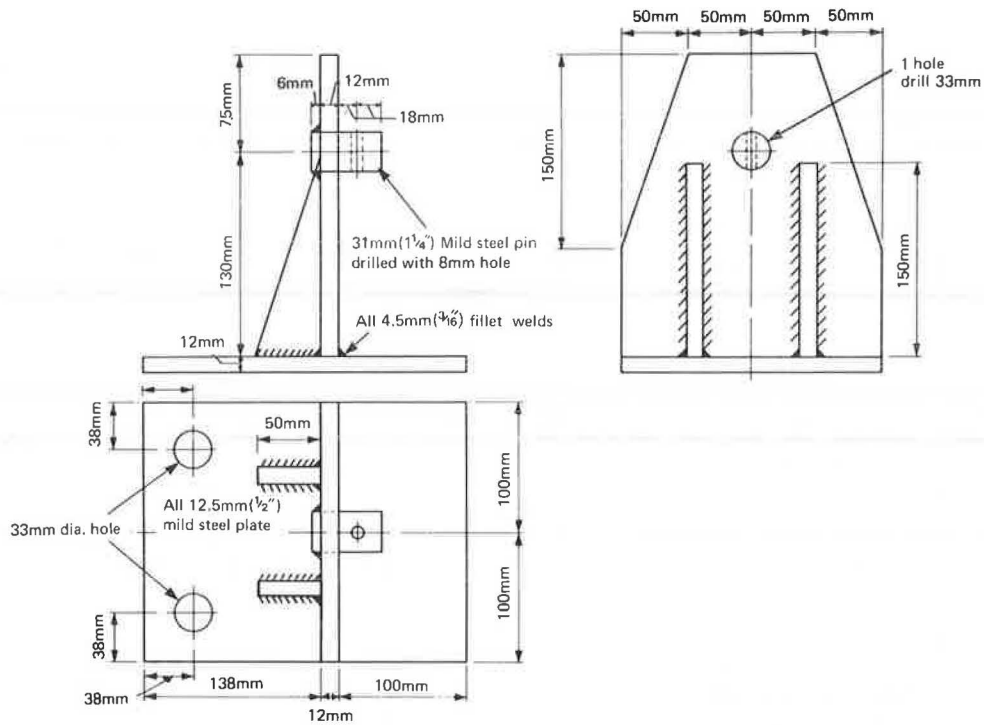

FIGURE 5 Bridge bearing (male); bridge bearing (f) similar but 31-mm (1.250-in.) diameter is omitted.

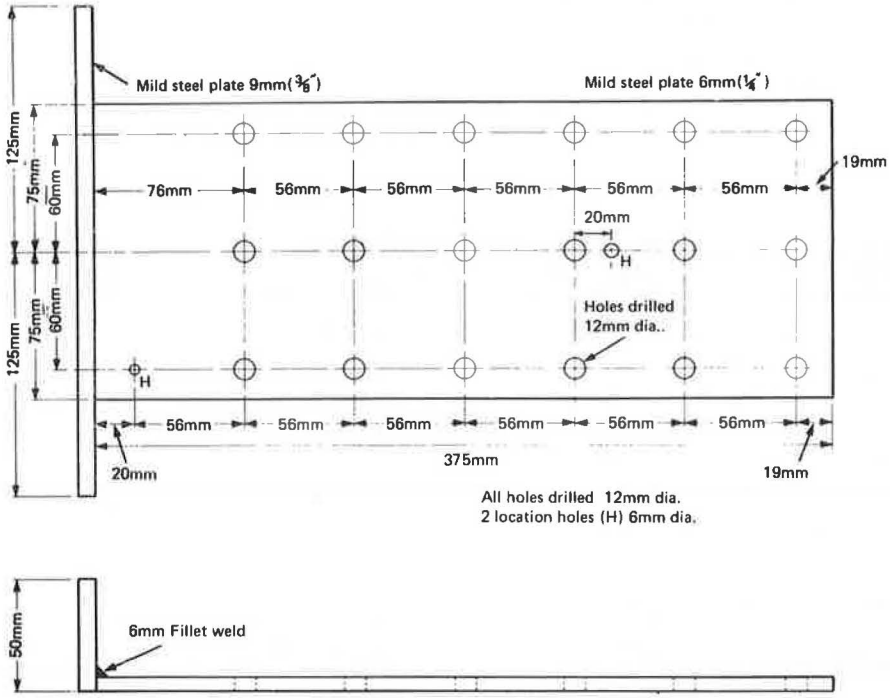

FIGURE 6 Top plate.

permanent tension. This multiple dowel joint is not common, but it has proved to be reliable both for the reversing load in the diagonal members and the end joint, which transmits the maximum shear load to the bearings.

Several types of deck have been tried. The preferred one is close boarded (Figure 10), with timbers 75 or 100 mm deep, nailed down to the trusses and to each other. The result is a strong stress-carrying deck that relieves the trusses of a large part of the load they would be expected to carry.

The bridge abutments are not included in the design. In Kenya, concrete block abutments were used for the bridges but timber or gabion abutment could be used provided suitable bearing surfaces are made to support the brackets that carry the weight of the bridge. These less permanent types of abutment are adequate for emergency or short-term use, but con-

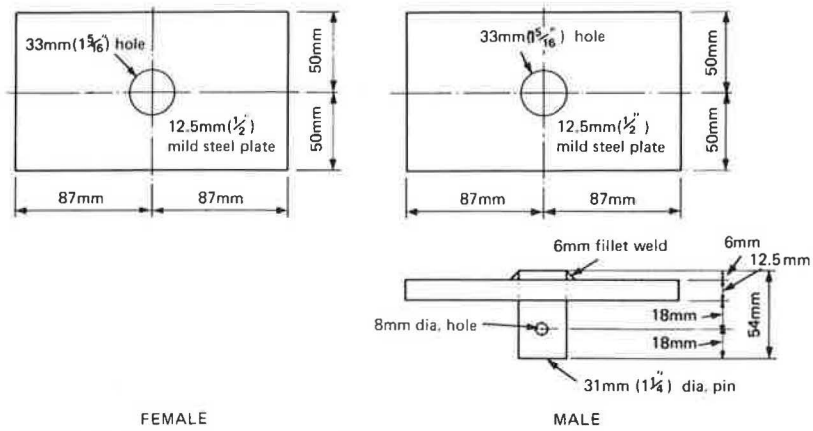

FIGURE 7 End plate.

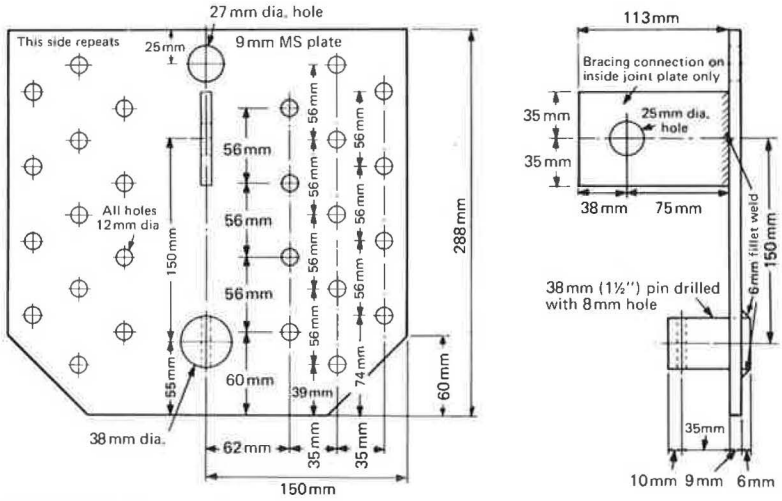

FIGURE 8 Bottom plate.

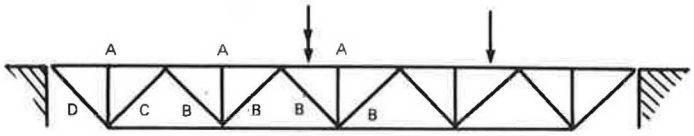

FIGURE 9 Bridge test at Isiolo.

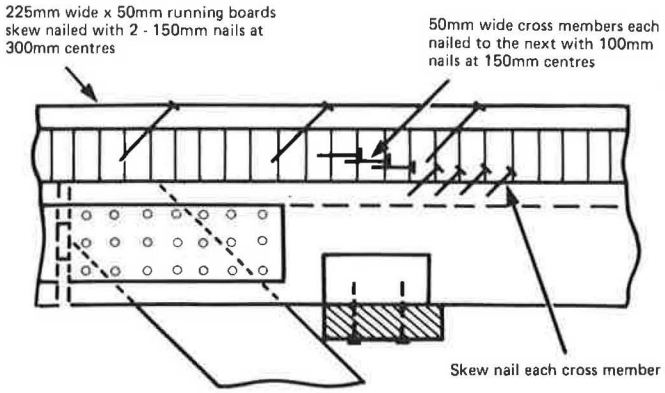

FIGURE 10 Detail of deck.

crete or masonry abutments may be required to last the full life of a bridge which, with good timber protection, is expected to be in excess of 20 years.

TIMBER PROTECTION

In Nairobi, each member of the frames after cutting was dipped for half an hour in a solution of dieldrin with a small portion of pentachlorophenol. This solution was also painted onto newly exposed surfaces after the holes had been bored for the bolts and dowels. On site, the soil was poisoned to a depth of 300 mm for a distance of 1 m behind the bridge abutments to guard against termite attack. (It should be noted, however, that long-term protection against termites is dubious, and the toxic effect of these chemicals on personnel not accustomed to wearing protective garments can be dangerous.)

MANUFACTURE

When the timber members of the frame are cut to size, it is important that lengths and angles are cut accurately and, for this reason, it is recommended that simple jigs be used at this stage. On site, it is necessary that the abutments are built or modified so that the bearing brackets may be placed exactly a multiple of 3 m apart. The frames are then assembled one by one from below, conditions permitting, or pairs of trusses, complete with cross bracing, are launched across the gap (Figure 11) suspended from a cable stretched between two derricks. The bearing brackets are then assembled and anchored to the abutments, and the deck and handrails are built.

DESIGN ASSESSMENT

A number of frames were made at the Transport and Road Research Laboratory and subjected to detailed examination and load testing. A truss was made of three frames and strains were measured in the members as a rolling load was passed across it. These tests resulted in the following conclusions:

1. The dowelled joints showed no sign of weakness during any of the tests;
2. Strains are not evenly distributed among the frames unless great care is taken during manufacture to ensure symmetry and squareness at the frame ends; and
3. Some minor modifications were made to the design resulting in an increase in frame strength.

Examination of the bridges in Kenya showed that

1. Use of a close-boarded deck significantly reduced the stress in the top and bottom chords. This effect probably diminished with time from about 40 percent in 1976 (when the bridges were new) to 25 percent in 1979.
2. The dowelled joints showed no sign of weakness in service, although the bottom joints tended to trap debris, which prevented the timber from drying and so could promote rot.
3. Stresses were not always well distributed between parallel members and trusses.
4. There was no deterioration in the steel parts, whether painted or not, after four years in service. This would not have been the case in a more severe environment.

[Details of the laboratory and field testing are given in Parry (1).]

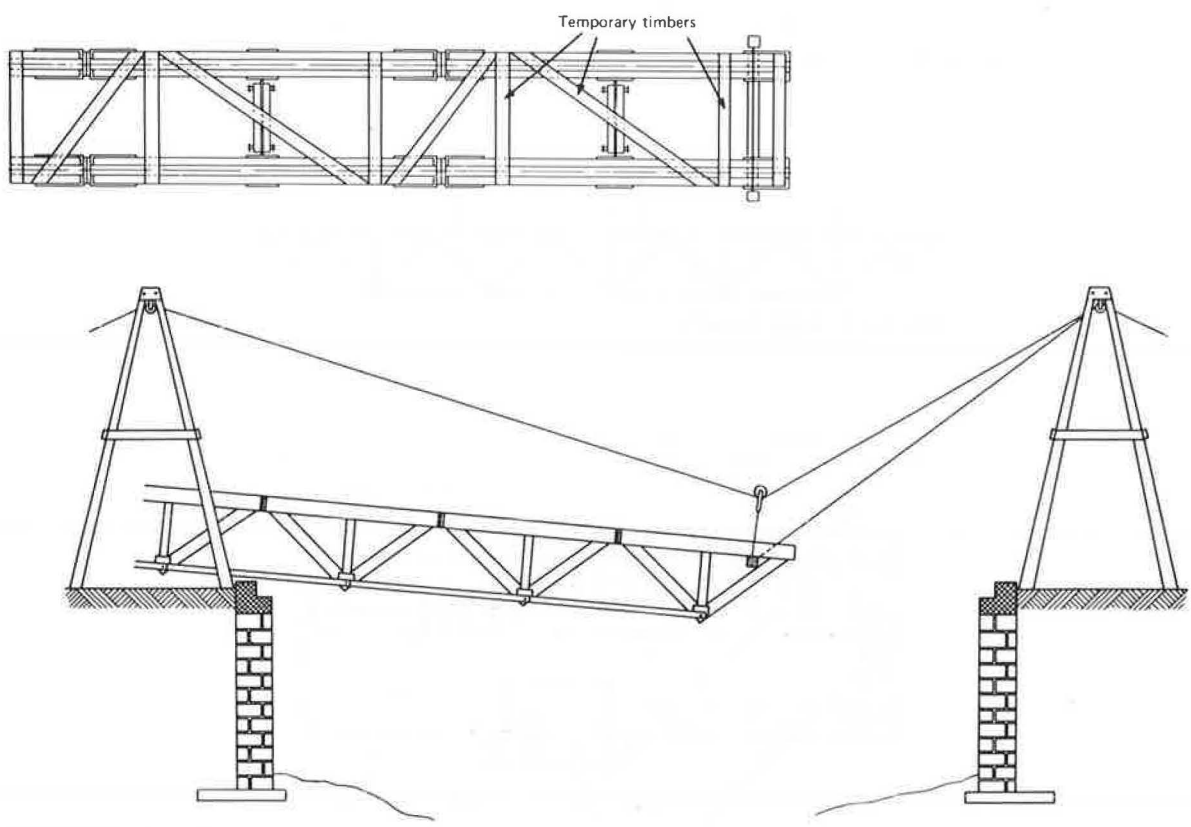

FIGURE 11 Launching a pair of trusses.

COST

Each site will impose conditions on bridge costs, which for a given span may vary by a large factor. Variations in cost attributed to nontypical foundations and abutments are not considered here. As with the design, the cost of a bridge must be determined for each individual circumstance. Following is a simple breakdown of costs for this design of truss and deck only. The prices quoted are the commercial prices applicable in Kenya expressed in United States dollars for a span of 18 m.

Material

Building grade Cypress 100 x 50 mm is $1.04 per m or $208 per m^3. Assuming 30 per cent excess for large sections and 20 per cent excess for graded timber, the price becomes $325 per m^3.

The following quantities are for a bridge with four trusses:

Material	Price ($ U.S.)	Cost ($ U.S.)
Deck	0.4 m^3 per meter length at $208 each	83.20
Frames	0.28 m^3 per meter length at $325 each	91.00
Steel plate and dowels	51 kg per meter length at $0.69 each	35.10
Steel chords	34 kg per meter length at $0.69 each	23.40
Nails and bolts	per meter length	10.40
Total	per meter length	243.10
	for 18 meters	4,375.80
8 bearings	44 kg at 0.69 each	30.29
Paint, wood preservatives, and soil poison		260.00
Total		290.29

Therefore, the material costs for an 18-m span are $290.29 + $4,375.80 = $4,666.09.

Wages

Wages for the staff are as follows (allowing 2 weeks for manufacture of jigs and frames):

Labor	Cost ($ U.S.)
5 laborers for 10 days at $3.90 per day	195.00
3 craftsmen for 10 days at $9.10 per day	273.00
Total	468.00
33 percent overhead on labor	156.00
Total labor for manufacture and erection	624.00

For comparison the cost of manufacture only is $4,666.09 for materials and $468 for labor, which totals $5,134.90.

In approximate terms, both Callender Hamilton- and Bailey-type bridges cost about 4 times this sum ex works, or about 5 times delivered by sea to Mombasa.

Steel RSJ beams, if available at the same price as the small sections previously referred to, would cost about $4,550. If imported, the cost would be about $6,500 and, in addition, some 15 m^3 of reinforced concrete would be required for the deck, costing about $7,020. If cement were not available, a deck could be made with 8 m^3 of timber, costing about $1,690. Transport costs to the site would be high for two steel beams that are each 20 m long and that each weigh 3 tons. Costs of these four types of bridges are summarized in the following table:

18-M Span Bridge--H10	Loading Price ($ U.S.)
Kenya timber bridge	5,200
Bailey/Callender Hamilton	26,000
RSJ with concrete deck	11,050-13,000
RSJ with wood deck	6,240-8,190

In Honduras, the prices estimated by TRADA for a 15-m bridge prefabricated as previously described are:

Item	Price ($ U.S.)
Materials	7,400
Launching equipment	4,000
The cost of plant to set up a workshop	18,000

MAINTENANCE

The maintenance of roads and bridges presents a considerable problem in the large majority of developing countries. In many cases, both pavements and bridges are deteriorating at an alarming rate. This results in the need for rehabilitation or rebuilding works long before the design life is over, and the high cost of rebuilding diverts funds from routine maintenance. This modular timber bridge requires no special maintenance other than that required by any timber structure, but regular inspection should be carried out, and this is often neglected in countries suffering from a shortage of qualified engineers.

At the Transport and Road Research Laboratory, a new bridge inspection guide is being prepared for use in developing countries. The premise of this guide is that under current conditions in some countries, inspection and maintenance is sadly inadequate, because the few available, trained staff members do not go into the field to make inspections. A handbook is therefore being prepared for use by the road foreman, who spends most of his time on the road, so that he can carry out regular preliminary inspections using a simple questionnaire. The accompanying book, which is aimed at district engineers, gives instruction on the preparation and maintenance of a bridge register and some guidance on the interpretation and followup of the road foreman's reports.

REFERENCES

1. J.D. Parry. The Kenyan Low Cost Modular Timber Bridge. Report LR 970. Department of the Environment, Department of Transport, Transport and Road Research Laboratory, Crowthorne, Berkshire, England, 1981.
2. Prefabricated Modular Wooden Bridges. Timber Research and Development Association, High Wycombe, Buckinghamshire, England, 1985.

The work described in this paper forms part of the research program of the Overseas Unit of the Transport and Road Research Laboratory. The work was carried out for the Overseas Development Administration, but any views expressed are not necessarily those of the Administration.