1177

TRANSPORTATION RESEARCH RECORD

Railroad Regulation Issues, Rail Passenger Services, Railroad Bridges, and Track Maintenance Management

TRANSPORTATION RESEARCH BOARD
NATIONAL RESEARCH COUNCIL
WASHINGTON, D.C. 1988

Transportation Research Record 1177
Price: $18.50
Editor: Elizabeth W. Kaplan
Production: Harlow Bickford

modes
2 public transit
3 rail transportation

subject areas
11 administration
12 planning
15 socioeconomics
16 user needs
21 facilities design
25 structures design and performance
40 maintenance
51 transportation safety
53 vehicle characteristics
54 operations and traffic control

Transportation Research Board publications are available by ordering directly from TRB. They may also be obtained on a regular basis through organizational or individual affiliation with TRB; affiliates or library subscribers are eligible for substantial discounts. For further information, write to the Transportation Research Board, National Research Council, 2101 Constitution Avenue, N.W., Washington, D.C. 20418.

Printed in the United States of America

Library of Congress Cataloging-in-Publication Data
National Research Council. Transportation Research Board.

Railroad regulation issues, rail passenger services, railroad bridges, and track maintenance management.

(Transportation research record, ISSN 0361-1981 ; 1177)
1. Railroads—Government policy—United States.
2. Railroads—United States—Management. I. National Research Council (U.S.). Transportation Research Board. II. Series.
TE7.H5 no. 1177 380.5 s 89-12241
[HE2757] [385'.068]
ISBN 0-309-04721-8

Sponsorship of Transportation Research Record 1177

GROUP 1—TRANSPORTATION SYSTEMS PLANNING AND ADMINISTRATION
Chairman: Ronald F. Kirby, Metropolitan Washington Council of Governments

Freight Transportation Section
Chairman: Richard A. Staley, Richard A. Staley Consulting

Committee on Surface Freight Transportation Regulation
Chairman: Robert G. Rhodes, Alexandria, Virginia
Secretary: Thomas M. Corsi, University of Maryland
W. Bruce Allen, David L. Anderson, Forrest S. Baker, Jr., Robert L. Banks, C. Phillip Baumel, Gordon W. Boldt, Leigh B. Boske, Leland S. Case, Jeffrey S. Gutman, Jay Etta Z. Hecker, Fritz R. Kahn, Richard H. Klem, Henry H. Livingston, Edward Margolin, Richard R. Myall, Byron Nupp, James K. O'Neal, Henry Posner III, Rolf R. Schmitt, Kenneth Eric Siegel, Frank N. Wilner

Specialized and Rural Transportation Services Section
Chairman: James E. Reading, Santa Clara County Transportation Agency

Committee on Intercity Bus Transportation
Chairman: Frederic D. Fravel, Ecosometrics, Inc.
John S. Andrews, Lawrence F. Cunningham, Donald L. Dean, Marta V. Fernandez, E. Brinkley Garner, Mary R. Kihl, T. C. Knappen, Joseph Kott, Dennis H. Moore, Harold E. Morgan, Paul A. Nagle, Jerome J. Rudnick, William G. Stage, Robert E. Stammer, Jr., William C. Underwood, Thomas Urbanik II, John A. Walgreen

Committee on Intercity Rail Passenger Systems
Chairman: George Haikalis, New York City Transit Authority
Secretary: S. David Phraner, Port Authority of New York and New Jersey
Murthy V. A. Bondada, Chris J. Boon, Nicholas M. Brand, Ross Capon, Robert J. Casey, Hal B. H. Cooper, Jr., Michel Cornier, William W. Dickhart, Donald O. Eisele, Raymond H. Ellis, Carl R. Englund, Jr., Winn B. Frank, Emmanuel S. Horowitz, Ata M. Khan, Douglas S. McLeod, Myles B. Mitchell, Jolene Moritz Molitoris, Henry C. Schrader, Ronald C. Sheck, George M. Smerk, Louis S. Thompson, Warren D. Weber, Walter E. Zullig, Jr.

Statewide Modal Planning Section
Chairman: Kevin E. Heanue, Federal Highway Administration.

Committee on State Role in Rail Transport
Chairman: C. John Langley, Jr., University of Tennessee
Secretary: Warren D. Weber, California Department of Transportation
Donald J. Baker, Jr., William R. Black, James Robert Blaze, Michael L. Calhoun, Robert Gibson Corder, P. Howard Croft, Jr., Bryan H. Davis, William T. Druhan, John W. Fuller, Thomas E. Houska II, G. Rex Nichelson, Jr., Howard D. Niebur, Paul C. Oakley, Edwin P. Patton, Christopher M. Randall, Louis A. Schmitt, Cecil L. Selness, Otto F. Sonefeld, Donald G. Ward, John Waters, William S. Weber, Benjamin Zodikoff

GROUP 2—DESIGN AND CONSTRUCTION OF TRANSPORTATION FACILITIES
Chairman: David S. Gedney, Harland Bartholomew & Associates

Railway Systems Section
Robert E. Kleist, Association of American Railroads

Committee on Railroad Track Structure System Design
Chairman: J. W. Winger, Brawn, Inc.
Secretary: Charles L. Stanford, New York City Transit Authority
Louis T. Cerny, Earl E. Frank, William R. Hamilton, John B. Heagler, Jr., Thomas B. Hutcheson, Ben J. Johnson, Arnold D. Kerr, Mohammad S. Longi, W. Scott Lovelace, Philip J. McQueen, Howard G. Moody, Myles E. Paisley, Gerald P. Raymond, J. Frank Scott, Alfred E. Shaw, Jr., W. S. Stokely, Daniel H. Stone, Marshall R. Thompson, Erland A. Tillman, George H. Way, Jr., John G. White

Committee on Rail Electrification Systems
Chairman: Richard A. Uher, Carnegie-Mellon University
Secretary: Robert A. Keith, New Jersey Transit Rail Operations
Liviu L. Alston, J. Hampton Barnett, Richard U. Cogswell, Steven R. Ditmeyer, Daniel J. Ferrante, Richard P. Howell, Stephen B. Kuznetsov, Henry H. Livingston, Jack R. Martin, Robert W. McKnight, Myles B. Mitchell, Per-Erik Olson, Harry Rappaport, Paul H. Reistrup, Martin F. Rister, Blair A. Ross, Joseph J. Schmidt, Peter L. Shaw, Eric H. Sjokvist, Robert B. Watson, Frank E. Young

Committee on Intercity Passenger Guided Transportation
Chairman: Myles B. Mitchell, M. B. Mitchell & Associates, Inc.
Secretary: Robert B. Watson, LTK Engineering Services
Kenneth W. Addison, John A. Bachman, Richard J. Cassidy, Louis T. Cerny, Harry R. Davis, William W. Dickhart, Charles J. Engelhardt, Daniel J. Ferrante, George Haikalis, John A. Harrison, Richard P. Howell, Richard D. Johnson, Robert A. Kendall, William J. Kleppinger, Jr., William J. Matthews, James M. Rankin, Joseph J. Schmidt, Earl C. Shirley, Eric H. Sjokvist, Richard A. Uher

GROUP 3—OPERATION, SAFETY, AND MAINTENANCE OF TRANSPORTATION FACILITIES
Chairman: James I. Taylor, University of Notre Dame

Maintenance Section

Committee on Railway Maintenance
Chairman: Albert J. Reinschmidt, Association of American Railroads
Secretary: William B. O'Sullivan, Federal Railroad Administration
David M. Coleman, Ronald H. Dunn, Amir N. Hanna, Thomas B. Hutcheson, Robert A. Kendall, Richard G. McGinnis, Willis H. Melgren, Guenther W. Oberlechner, Ernest T. Selig, William J. Semioli, Harry E. Stewart, Vincent R. Terrill

Kenneth E. Cook and Elaine King, Transportation Research Board staff

Sponsorship is indicated by a footnote at the end of each paper. The organizational units, officers, and members are as of December 31, 1987.

Transportation Research Record 1177

Contents

Foreword

The first three papers in this Record address railroad restructuring and related regulatory and public policy concerns. Grimm et al. have examined the relationship among light-density lines, main lines, and overall system traffic densities. Their evidence indicates that the impact of eliminating a large number of low-density lines on main-line traffic densities is minimal. This evidence is important for the formulation of regulations governing branch-line abandonments. Dennis developed a model to measure the impacts of end-to-end railroad mergers on economic welfare. Using data from a recent merger, this model generated results consistent with the theory that such mergers lead to reduced costs, lower prices for rail service, and improved service time. Recognition of these benefits is relevant to the development of merger regulations. The paper by Casavant et al. is on a procedure for evaluating the economics of the existing rail system within a region and identifying potential alternatives for retaining essential rail service before piecemeal abandonment. This procedure can be useful to government agencies and to shippers in deciding when their assistance in preserving branch lines is justified.

Four papers deal with rail passenger services. In the paper by Kuehne and Hundt, the travel patterns, socioeconomic characteristics, and service ratings of Michigan's intercity rail users are compared with those analyzed in earlier years and with those of Michigan intercity bus users. Several interrelationships of intercity rail and bus service are examined, such as market area, trip diversion, and interconnecting service. The study data have been used for demand estimation, new station analysis, service improvement analysis, market targeting, and service evaluation. Using a case study, Franks describes the development of an integrated feeder bus network to expand the service area of a state-supported Amtrak intercity rail service. This example shows how feeder buses can be used as a low-cost way of increasing Amtrak ridership and revenues. Looking ahead to the development of high-speed rail passenger systems in the United States, Rozek and Harrison have examined the compatibility of grade crossings with high-speed rail operations. They have identified the five most important factors in evaluating grade crossings for high-speed rail lines as safety, cost, high-speed rail versus highway operation, environmental concerns, and institutional issues. Sjokvist's paper is a brief historical overview of the development of high-speed trains during the last century. Rules applied for utilization of adhesion between wheel and rail are provided, and a number of high-speed trains, locomotives, and power cars are described. The primary focus is power requirements related to limitations on speed.

The next two papers describe systems developed by the U.S. Army to facilitate maintenance management of Army-owned rail lines. The paper by Uzarski and Plotkin presents the interim railroad track maintenance management system, RAILER I. This system consists of two parts: (a) procedures for collecting pertinent field and office information (such as track inventory, inspection records, traffic data, maintenance and repair costs, and work history) and (b) computer software for processing the information to facilitate both network- and project-level decision making. In the paper by Uzarski et al., a microcomputer-based procedure, FORPROP, is described. This procedure incorporates a benefit-cost analysis and is intended for use by Army planners for priority ranking rail line maintenance and repair projects.

The last two papers deal with railroad bridges. Uppal and Rizkalla report results of tests on two types of timber bridge spans to determine their behavior under the passage of trains at different speeds. The test procedure is briefly described, and the influence of parameters such as train speed and static wheel loads on dynamic load and displacement factors is discussed. Longi describes the Long Island Rail Road's aging bridge infrastructure and presents details of three bridge rehabilitation projects. The railroad's bridge data base, load rating program, and bridge management process are also discussed.

Impact of Rail Rationalization on Traffic Densities

CURTIS M. GRIMM, KENT A. PHILLIPS, AND LESLIE J. SELZER

Though the question of the interdependence of branch lines and main lines has long been of policy relevance, there is, to date, little evidence on the relationship among light-density lines, main lines, and overall system traffic densities. This paper provides evidence of the impact of eliminating a substantial number of low-density lines, along with the traffic originating and terminating on these lines, on main-line densities. The relationship between light- and high-density lines is explored using both national and individual railroad line segment density data. The main finding of the study is that elimination of a large number of light-density lines does not dramatically reduce main-line densities.

The rail industry is a complex integrated system capable of producing multiple transportation services. Measuring the structural economics or the production characteristics of railroads is therefore a complex problem (*1*). Most of the previous estimates of rail cost structure have used aggregate cost functions to estimate economies of scale, density, and length of haul. These studies find that economies of density exist in the rail industry. Such economies cause average costs to decrease as traffic density [net ton-miles per mile of road (NTM/RM)] increases. Thus average costs on light-density branch lines are higher than on high-density lines.

Previous research (*2, 3*) on branch-line abandonments suggests that a large proportion of existing light-density lines is not economically viable. However, the impact of abandoning branch lines on this scale has not been examined. Although the vast majority of traffic originating and terminating on branch lines moves over main lines and therefore clearly augments main-line densities, the extent to which low-density branch lines are responsible for high densities on main lines has not, heretofore, been the subject of systematic empirical investigation.

The contribution of branch lines to main-line densities is, however, of importance to both managers and public policy makers. Managers of the rail system must assess the impact that abandonment of light-density lines will have on main-line densities. Although abandonment of one or two light-density lines may not have significant impact on main-line densities, large abandonment programs may have a deleterious effect on the economies of density associated with main lines.

Public policy makers also benefit from heightened awareness of the relationship between feeder and main lines. From their standpoint, the adverse impact of abandonments on the shipper community must be balanced against potential financial benefits to the carrier. If feeder lines are not vital to the efficiency of the high-density lines, they are properly evaluated as independent entities. In the absence of a linkage between light-density branch lines and high-density main lines, both state and federal policy makers should develop strategies for ensuring future transportation services for shippers on nonviable line segments. The link between abandonment of light-density branch lines and main-line density is then of relevance for this determination.

LITERATURE REVIEW

Although literature on excess railroad capacity is scant, there is a general consensus among transportation economists that the industry is overcapitalized with regard to roadway investment. This excess investment has been directly linked to the industry's overall poor financial performance (*4*). Quantification and identification of redundant capacity have been complicated by the lack of comprehensive data on line segment costs and alternative routings and sources of transportation available to traffic after abandonment. Furthermore, the rigid regulatory structure in place before passage of the railroad regulatory reform acts of 1976 and 1980 deemphasized the pure economic issues of rail line viability. Following the bankruptcy of the Penn Central and six other northeastern railroads in the early 1970s, detailed empirical research on the question of excess capacity was initiated.

Much of the initial research on identifying excess railroad capacity was undertaken by the United States Railway Association (USRA)—an organization established by Congress to resolve the bankruptcy of the northeastern railroads. In its efforts to reorganize the bankrupt lines, the USRA (*5*) concluded that two-thirds of the approximately 9,600 mi of light-density lines owned by seven carriers should be excluded from the final Conrail system.

Comprehensive studies of nationwide light-density rail operations were conducted by Harris (*3, 6*). Those studies concluded that 35,000 mi of branch lines were unprofitable. Harris's estimates were based on a rail movement simulation model that flowed individual movements contained in the Interstate Commerce Commission (ICC) waybill over the Federal Railroad Administration's (FRA's) railroad network model. The viability of potentially excess miles was based on the ability of traffic originating or terminating, or both, on light-density lines to cover their costs. Because Harris used data from the early 1970s, before the major regulatory reforms

---

C. M. Grimm, College of Business and Management, University of Maryland, College Park, Md. 20742. K. A. Phillips and L. J. Selzer, Interstate Commerce Commission, 12th Street and Constitution Avenue, N.W., Washington, D.C. 20423.

of the 4R Act, the Staggers Act, and the Motor Carrier Act of 1980, his estimates were predicated on the regulatory structure in place at that time.

Grimm (*2*) replicated the Harris study employing postreform data. Using a broad range of revenue, cost, and traffic retention rate assumptions, Grimm found that, despite the large number of abandonments that had taken place since the Harris study, substantial excess capacity remains in the U.S. railroad system. In particular, evaluation of fixed costs consistent with the ICC's standards for revenue adequacy results in estimates of from 28,000 to 33,000 mi of nonviable light-density branch lines.

No study to date, however, has specifically addressed the system impact of abandonments of this order of magnitude. Critics of abandonments have suggested that the elimination of light-density feeder lines could result in significant reductions in high-density line volumes. If the traffic volume were sufficiently reduced, it has been postulated, the economies of density inherent in high-density rail operations could be lost.

DATA AND METHODOLOGY

To determine the impacts of line exclusion on main-line and system densities, the network implications of line eliminations must be taken into account. The FRA network model, an analytical representation of the U.S. railroad system, is ideal for this purpose. The model includes more than 9,000 line segments, with a total mileage nearly equal to that of the rail system itself. The FRA has collected from the owning railroads information about the traffic density on each line segment. At the time of the study, there were six density classifications or categories based on traffic volume measured in gross ton-miles per route-mile (GTM/RM): 1 (less than 1 million GTM/RM), 2 (1 to 5 million GTM/RM), 3 (5 to 10 million GTM/RM), 4 (10 to 20 GTM/RM), 5 (20 to 30 million GTM/RM), and 6 (greater than 30 million GTM/RM).

The FRA network model is a highly detailed representation of the U.S. rail system. In order to use it to test implications of light-density line exclusions, the model must be combined with a rail traffic data base. The data bases used were the ICC's 1981 and 1982 rail waybill files. These samples represent approximately a 1 percent sample of railroad traffic in the respective years. The waybill sample includes detailed information on each movement, including origin, destination, participating carriers, commodity, mileage, and revenues. Each movement in the waybill sample was processed through the FRA network model and information on individual line segment density was captured.

The years 1981 and 1982 were selected as base years because the integration of the waybill data base and the FRA network model is a complex and expensive operation and this integration had already been carried out for other purposes, so the merged network model–waybill file for 1981 and 1982 was available. Although waybill information alone for subsequent years has been released, a more recent merged network model–waybill file is not available. Also, the network model itself accurately reflected the rail system as of mid-1984 in that lines abandoned since original development of the network model were "flagged" and removed from the model. Thus any traffic originating or terminating on these lines was not used in determining baseline line segment densities. Finally, although the rail system itself continues to change, there is no reason to believe that the fundamental relationship between main and branch lines is substantially different now than it was in 1984.

To assess the impact of line exclusions on traffic densities, the waybill traffic was first flowed through the network model and the distribution of lines across the six density categories was recorded. A total of 33,000 mi, slightly more than one-third of Category 1 lines and 18 percent of the total rail system, were cut from the system to test the impact on main-line densities. [More specifically, lines that failed to pass a financial viability test were chosen for exclusion. The viability of each Density Category 1 line segment was based on comparison of the revenues generated by traffic originating and terminating on the line with the fixed cost of the branch line and the variable cost of the traffic generated by the line. Full details of the procedure used to assess financial viability are given by Grimm (*2*).] The traffic originating and terminating on these lines was assumed to be completely lost to the rail industry and removed from the file. This modified waybill file was reflowed through the FRA model and the resulting density information was again recorded and compared with that obtained from the original benchmark flow of the 1981–1982 waybill.

In reviewing the difference between the two flows, the authors attempted to determine if the exclusion of light-density branch lines and loss of all traffic associated with these lines caused a significant number of line segments to fall to a lower density category. If this were the case, branch-line traffic could be making a substantial contribution to main-line densities. A substantial reduction in the number of ton-miles on higher-density lines would indicate a high degree of interdependence between branch lines and main lines. In contrast, minimal impacts on main-line densities would indicate that light-density lines are not a major source of traffic. A secondary impact could also occur: main lines might in some cases remain in the same density class but handle a lower volume of traffic after line exclusion. Data on average net ton-miles in each density category both before and after line exclusion were also studied to gauge this impact.

Line segment density data were examined for the U.S. rail system as a whole and for the five railroads with the largest number of miles failing the financial viability test. These railroads were the Burlington Northern (BN) with 6,377 mi, the Chicago and North Western (CNW) with 4,117 mi, the Atchison, Topeka & Santa Fe (ATSF) with 1,932 mi, the Seaboard Coast Line (SCL) with 1,835 mi, and the Southern Pacific (SP) with 1,575 mi (Conrail and the Milwaukee had 2,094 and 3,859 mi, respectively, but were not included because of their unique status). Results are provided in the following section.

RESULTS

The tables give the effect of excluding branch lines and their associated traffic on main-line densities for the U.S. rail system and for the five individual carriers. The results suggest that, with the possible exception of the CNW, large-scale branch-line elimination would not substantially reduce densities on the higher-density lines.

Table 1 gives the distribution of all rail lines in the United States by density classification, along with total net ton-mile output and the average density in each density category. Line 1 gives the system route-miles in each category and Line 2 the percentage of the total in each classification. Lines 3 and 4 supply the same statistics after light-density lines are dropped. Line 5 reflects the net loss in route-miles in each density category. Lines 6 through 10 give data on net ton-mile output using the same format that was used in Lines 1–5. Lines 11 and 12 show average NTM/RM density both for the system and after exclusion of lines.

For the United States as a whole, two-thirds of the total system route-miles reside in the lowest two density categories, and they produce only 7.2 percent of the total net ton-miles. Conversely, lines in Density Categories 5 and 6 make up 15 percent of total system route-miles and produce almost two-thirds of total system output. After exclusion of lines, total system route-miles were reduced by 17.5 percent. Loss of all traffic originating or terminating, or both, on those lines reduces gross ton-mile output by only 5 percent. Thus elimination of a large number of feeder lines in the lowest-density category does not significantly affect the total output produced by the U.S. rail system. Also of interest is the migration of line segments into lower density classifications. After traffic loss, there is an increase in the route-miles in Density Category 4 along with an increase in output. This shift of line segments into lower density categories adversely affects the output generated by lines in Density Categories 5 and 6.

Examination of data for the BN contained in Table 2 shows a reduction in route-miles of 6,377 mi or 22.4 percent of the total system. Despite this significant change in route-miles, the BN's total output as measured by net ton-miles drops a little less than 7 percent or by about 9 million net ton-miles. The greatest change occurs in Density Category 4 and 5 lines. The Category 4 lines pick up 3.6 million net ton-miles, and the Category 5 lines lose 8.8 million net ton-miles from lost traffic and shifts in line segment density. However, this shift does not significantly alter the average NTM/RM output for those density classifications. Average densities for all categories showed no significant changes, but the overall average system density increased by fully 20 percent due to the reduction in route-miles.

Table 3 gives data for the CNW; the results are much the same as for the BN. A little more than 4,000 mi or fully 37 percent of the system was excluded. Loss of these route-miles affects the CNW's output by reducing it by 13.4 percent. This is the largest loss of output (on a percentage basis) for the five railroads in the analysis, but it does not appear to be out of line given the large number of route-miles eliminated. It should be noted that the CNW produced the least output of the rail

TABLE 1 U.S. RAIL SYSTEM

	Density Classification						
	1	2	3	4	5	6	Total
System route-miles (thousands)	89.6	32.0	15.9	18.5	13.6	14.1	183.0
Percentage of total route-miles	48.96	17.49	8.69	10.11	7.43	7.70	100.00
System route-miles after exclusion and traffic loss (thousands)	63.9	27.1	15.5	19.8	12.3	13.1	151.0
Percentage of revised route-miles	42.32	17.95	10.26	13.11	8.15	8.68	100.00
Change in route-miles (Line 1 – Line 3) (thousands)	25.7	4.9	0.4	(1.3)	1.3	1.0	32.0
System net ton-miles (millions)	9,659	39,061	56,310	128,868	152,898	288,088	674,806
Percentage of total net ton-miles	1.43	5.79	8.34	19.10	22.66	42.69	100.00
System net ton-miles after exclusion and traffic loss (millions)	6,616	34,424	54,378	138,016	137,689	265,362	636,487
Percentage of revised net ton-miles	1.04	5.41	8.54	21.68	21.63	41.69	100.00
Change in net ton-miles (millions)	3,043	4,637	1,932	(9,148)	15,209	22,726	38,319
Average system net ton-miles per route-mile (thousands)	107	1,219	3,523	6,940	11,237	20,412	3,668
Average net ton-miles per route-mile after exclusion and traffic loss (thousands)	103	1,270	3,488	6,939	11,153	20,214	4,188

TABLE 2 BURLINGTON NORTHERN INC.

	Density Classification						
	1	2	3	4	5	6	Total
System route-miles	14,111.6	4,300.8	1,841.6	3,363.4	2,748.7	2,060.0	28,426.0
Percentage of total route-miles	49.64	15.13	6.48	11.83	9.67	7.25	100.00
System route-miles after exclusion and traffic loss	8,979.4	3,440.8	1,764.2	3,974.4	1,938.2	1,952.0	22,049.0
Percentage of revised route-miles	40.72	15.61	8.00	18.03	8.79	8.85	100.00
Change in route-miles (Line 1 – Line 3)	5,132.2	860.0	77.4	(611.0)	810.5	108.0	6,377.0
System net ton-miles (millions)	1,540	5,600	7,037	25,682	32,225	64,088	136,172
Percentage of total net ton-miles	1.13	4.11	5.17	18.86	23.66	47.06	100.00
System net ton-miles after exclusion and traffic loss (millions)	983	4,792	7,079	29,370	23,428	61,212	126,865
Percentage of revised net ton-miles	0.77	3.78	5.58	23.15	18.47	48.25	100.00
Change in net ton-miles (millions)	557	808	(42)	(3,688)	8,797	2,876	9,307
Average system net ton-miles per route-mile (thousands)	109	1,302	3,821	7,636	11,724	31,111	4,790
Average net ton-miles per route-mile after exclusion and traffic loss (thousands)	110	1,393	4,013	7,390	12,087	31,359	5,754

TABLE 3 CHICAGO AND NORTH WESTERN TRANSPORTATION COMPANY

	Density Classification						
	1	2	3	4	5	6	Total
System route-miles	7,117.1	2,085.4	716.0	489.8	94.5	536.7	11,039.5
Percentage of total route-miles	64.47	18.89	6.49	4.44	0.86	4.86	100.00
System route-miles after exclusion and traffic loss	3,913.9	1,337.4	630.3	409.3	106.0	525.2	6,922.1
Percentage of revised route-miles	56.54	19.32	9.11	5.91	1.53	7.59	100.00
Change in route-miles (Line 1 – Line 3)	3,203.2	748.0	85.7	80.5	(11.5)	11.5	4,117.4
System net ton-miles (millions)	658	2,243	2,665	3,355	1,136	9,265	19,322
Percentage of total net ton-miles	3.41	11.61	13.79	17.36	5.88	47.95	100.00
System net ton-miles after exclusion and traffic loss (millions)	414	1,782	2,398	2,707	1,098	8,641	17,040
Percentage of revised net ton-miles	2.43	10.46	14.07	15.89	6.44	50.71	100.00
Change in net ton-miles (millions)	244	461	267	648	38	624	2,282
Average system net ton-miles per route-mile (thousands)	92	1,075	3,722	6,849	12,025	17,263	1,750
Average net ton-miles per route-mile after exclusion and traffic loss (thousands)	106	1,332	3,805	6,613	10,362	16,452	2,462

systems analyzed and that the CNW's Category 1 lines generate a greater percentage of the total system traffic than do the Category 1 lines of other carriers. The changes caused by the loss of traffic and the shift in line segment densities appear to be spread uniformly over all density classifications. Only Category 5 and 6 average density and total system average density change significantly, with the latter increasing by 40 percent.

Data for the ATSF (Table 4), the SCL (Table 5), and the SP (Table 6) all show similar results. Excluded lines range from 11 to 15 percent of total system route-miles. However, the impact on output is not severe, with the carriers losing only 3 to 7 percent of total system net ton-miles. The ATSF data show a substantial shift of route-miles into Density Category 4. This increases the output generated over these lines by fully 60 percent and increases the average density by almost 1 million NTM/RM. Neither the SCL nor the SP shows dramatic changes in NTM/RM in the six density classifications, although there is some shift in output from Category 6 to Category 5 lines for the SP.

CONCLUSION

The elimination of large segments of Category 1 stub end branch lines does not appear to radically affect railroad mainline densities. With the exception of the CNW, loss of output is between 3 and 7 percent of total net ton-miles. For the entire U.S. rail system the loss is 5.7 percent. These results were obtained using the conservative assumption that no traffic currently originating or terminating on the excluded lines would be retained on the rail system. However, in reality some traffic would be retained through intermodal operations, most commonly by trucking to an adjacent rail connection or employing trailers on flat cars. Moreover, acquisition of abandoned branch lines by short-line operators would also aid in the retention of traffic. According to the Interstate Commerce Commission (7), this practice has become increasingly common in recent years. Overall, retention of some of the excluded traffic could be expected to lessen the loss of output for both the system and individual line segments.

Another observable effect is the degradation of some line segments' output to the extent that they fall into lower density classifications. However, the shift of lines to lower density classes is relatively small.

These results have significance for both management and regulators. When the results are viewed in conjunction with the previous findings of Harris and Grimm, they imply that large-scale sale or abandonment of branch lines may relieve railroads of the economic burden of rehabilitating segments of

TABLE 4 ATCHISON, TOPEKA & SANTA FE RAILWAY COMPANY

	Density Classification						
	1	2	3	4	5	6	Total
System route-miles	4,684.1	2,504.5	1,589.9	649.0	913.1	2,446.5	12,787.1
Percentage of total route-miles	36.63	19.59	12.43	5.08	7.14	19.13	100.00
System route-miles after exclusion and traffic loss	3,505.8	1,895.5	1,451.9	920.0	733.1	2,348.5	10,854.8
Percentage of revised route-miles	32.30	17.46	1.27	8.48	6.75	21.64	100.00
Change in route-miles (Line 1 – Line 3)	1,178.3	609.0	138.0	(271.0)	180.0	98.0	1,932.3
System net ton-miles (millions)	644	3,096	5,673	4,085	10,005	37,101	60,577
Percentage of total net ton-miles	1.06	5.11	9.36	6.74	16.52	61.25	100.00
System net ton-miles after exclusion and traffic loss (millions)	418	2,510	4,991	6,543	7,664	34,236	56,362
Percentage of revised net ton-miles	0.74	4.45	8.86	11.61	13.60	60.74	100.00
Change in net ton-miles (millions)	226	586	682	(2,458)	2,341	2,865	4,215
Average system net ton-miles per route-mile (thousands)	138	1,236	3,568	6,253	10,957	15,165	4,737
Average net ton-miles per route-mile after exclusion and traffic loss (thousands)	119	1,324	3,437	7,112	10,455	14,578	5,192

TABLE 5 SEABOARD COAST LINE RAILROAD

	Density Classification						
	1	2	3	4	5	6	Total
System route-miles	6,266.8	3,257.0	1,137.1	2,627.1	2,526.8	589.1	16,403.9
Percentage of total route-miles	38.20	19.86	6.93	16.02	15.40	3.59	100.00
System route-miles after exclusion and traffic loss	4,941.8	2,792.0	1,085.2	2,793.1	2,347.6	581.3	14,568.9
Percentage of revised route-miles	33.92	19.16	7.45	19.17	16.11	3.99	100.00
Change in route-miles (Line 1 – Line 3)	1,325.0	465.0	51.9	(166.0)	179.2	7.8	1,835.0
System net ton-miles (millions)	937	4,106	3,917	17,842	29,742	9,019	65,563
Percentage of total net ton-miles	1.43	6.26	5.97	27.21	45.36	13.76	100.00
System net ton-miles after exclusion and traffic loss (millions)	743	3,969	3,625	18.393	27,851	8,813	63,394
Percentage of revised net ton-miles	1.17	6.26	5.72	29.01	43.93	13.90	100.00
Change in net ton-miles (millions)	194	137	292	(551)	1,891	206	2,169
Average system net ton-miles per route-mile (thousands)	149	1,261	3,444	6,792	11,770	15,310	3,997
Average net ton-miles per route-mile after exclusion and traffic loss (thousands)	150	1,422	3,340	6,585	11,729	15,162	4,351

TABLE 6 SOUTHERN PACIFIC TRANSPORTATION COMPANY

	Density Classification						
	1	2	3	4	5	6	Total
System route-miles	5,738.3	1,718.2	1,061.2	1,361.8	1,847.5	1,947.7	13,674.7
Percentage of total route-miles	41.96	12.56	7.76	9.96	13.51	14.24	100.00
System route-miles after exclusion and traffic loss	4,274.7	1,672.2	1,005.2	1,401.8	2,007.5	1,738.7	12,100.1
Percentage of revised route-miles	35.33	13.82	8.31	11.59	16.59	14.37	100.00
Change in route-miles (Line 1 – Line 3)	1,463.6	46.0	56.0	(40.0)	(160.0)	209.0	1,574.6
System net ton-miles (millions)	7,847	2,010	3,037	9,370	18,566	27,062	60,830
Percentage of total net ton-miles	12.90	3.30	4.99	15.40	30.52	44.49	100.00
System net ton-miles after exclusion and traffic loss (millions)	6,422	1,923	2,737	9,451	20,169	23,280	58,202
Percentage of revised net ton-miles	11.03	3.30	4.70	16.24	34.65	40.00	100.00
Change in net ton-miles (millions)	1,425	87	300	(81)	(1,603)	3,782	2,628
Average system net ton-miles per route-mile (thousands)	137	1,170	2,862	6,881	10,049	13,894	4,448
Average net ton-miles per route-mile after exclusion and traffic loss (thousands)	150	1,150	2,723	6,742	10,047	13,389	4,810

their systems with little or no effect on the amount of traffic carried.

Regulators and legislators need to be aware that light-density line elimination does not necessarily imply substantial loss of main-line output and the corresponding efficiency associated with the high densities on these lines. Thus regulators can scrutinize individual line segment abandonments as isolated occurrences and appropriately weigh the economic benefits of reduced costs to the carrier against the social ramifications of reduced service to specific shippers in each case. If service is found to be in the public interest, state or federal resources can be provided to ensure continued transportation services. These results have particular significance for guiding legislative actions. As discussed in Keeler (*8*, p. 101), the 4R Act and the Staggers Act liberalized abandonment procedures on the basis that allowing railroads to shed unprofitable lines was an important step toward returning the industry to financial health. However, recent legislative initiatives would place greater restrictions on abandonments. [A proposal passed by a House subcommittee "requires ICC hearings on abandonment of lines over 256 miles long and provides that a one-year freeze be put on lines where abandonment was denied" (*8*, p. 6).] Thus the results provide important evidence for legislators as they consider abandonment policy and suggest that lawmakers exercise caution when imposing further restrictions on abandonments.

REFERENCES

1. C. M. Grimm and R. G. Harris. Structural Economies of the U.S. Rail Freight Industry: Concepts, Evidence, and Merger Policy Implications. *Transportation Research*, Vol. 17A, No. 4, July 1983.
2. C. M. Grimm. Branch Line Capacity in the U.S. Railroad Industry: A Simulation Model Approach. *Logistics and Transportation Review*, Vol. 22, No. 3, 1986.
3. R. G. Harris. Economic Analysis of Light Density Rail Lines. *Logistics and Transportation Review*, Vol. 16, No. 1, 1980.
4. T. E. Keeler. *Railroads, Freight, and Public Policy*. Brookings Institution, Washington, D.C., 1983.
5. *Preliminary System Plan*. United States Railway Association, Feb. 1975, Vol. 1, Chapter 7.
6. R. G. Harris. *Rationalizing the Rail Freight Industry: A Case Study in Institutional Failure and Proposals for Reform*. Ph.D. dissertation. University of California, Berkeley, Sept. 1977.
7. *New Short Lines and Regional Railroads*. Office of Transportation Analysis, Interstate Commerce Commission, Sept. 1987.
8. *Traffic World*, Nov. 9, 1987.

The views expressed by the authors are their own and do not reflect those of the Interstate Commerce Commission.

Publication of this paper sponsored by Committee on Surface Freight Transport Regulation.

Economic Analysis of an End-to-End Railroad Merger

Scott M. Dennis

End-to-end railroad mergers involve two or more carriers that serve separate regions and connect with each other at relatively few points. Such mergers are likely to increase economic welfare, but the magnitude of the increase depends on the individual markets involved. This study quantifies the effect of the Chessie System–Family Lines merger on economic welfare. Estimates are developed for both the demand and the cost of surface freight transportation in specific transportation markets. The model developed is sufficiently general to allow for rail, truck, and barge competition and for changes in cost, price, service time, market share, and market size as a result of the merger. The cost savings and service time improvements resulting from this end-to-end merger are estimated to increase economic welfare by $340 million to $350 million per year. Although different markets may display different results, it appears that end-to-end railroad mergers with similar characteristics may well confer substantial economic benefits.

The recent deregulation of the surface freight transportation industry has prompted a wave of railroad mergers. The mergers of Grand Trunk Western–Detroit, Toledo and Ironton (1978), Burlington Northern–St. Louis and San Francisco (1979), Chessie System–Family Lines (1980), Norfolk and Western–Southern (1982), Union Pacific–Missouri Pacific–Western Pacific (1982), Soo Line–Milwaukee Road (1985), Norfolk Southern–Conrail (1986), Santa Fe–Southern Pacific (1986), and Pacific Rail–Missouri, Kansas and Texas (1986) have all been either proposed or consummated since 1978. The wave of mergers has renewed the public policy debate over the effect of railroad mergers on economic welfare.

Railroad mergers may be divided into two types. Parallel mergers involve two or more carriers that serve the same region. A merger between two such carriers providing substitute forms of transportation may increase or decrease economic welfare depending on pricing policy and cost savings that result from the merger. End-to-end mergers involve two or more carriers that serve separate regions and connect with each other at relatively few points. The "upstream" railroad carries traffic from origin to interchange, and the "downstream" railroad carries traffic from interchange to destination. End-to-end mergers are likely to increase economic welfare in the affected markets.

Studies by Levin and Weinberg (*1*) and Harris and Winston (*2*) suggest that end-to-end mergers are likely to increase economic welfare. Klein et al. (*3*) suggest that the large fixed costs and specialized assets associated with railroad operation may make it difficult to attain financial benefits without merger. However, the magnitude of the increase, and hence the benefits of a public policy permitting end-to-end railroad mergers, depends on the individual markets involved. This study was undertaken to quantify the effect of the Chessie System–Family Lines merger on economic welfare. Estimates are developed for both the demand and the cost of surface freight transportation in specific transportation markets. The model is sufficiently general to allow for rail, truck, and barge competition and for changes in cost, price, service time, market share, and market size as a result of the merger. The cost savings and service time improvements that result from this end-to-end merger are estimated to increase economic welfare by $340 million to $350 million per year, assuming all other factors remain unchanged. End-to-end railroad mergers with similar characteristics may confer similar economic benefits.

MODEL OF THE MARKET

A given surface freight transportation market may be served by any of several transportation modes including a variety of rail routes. An end-to-end merger affects prices, service times, and costs on one or more individual routes. A welfare analysis of end-to-end mergers must therefore use demand and cost functions for individual routes in a market, not the aggregated functions common in studies of transportation deregulation.

Demand for Transportation

A nested multinomial logit model of shipper choice was developed along the lines discussed by Ben-Akiva and Lerman (*4*). In the most general case, shippers are assumed to have a decision tree like the one shown in Figure 1. Each node of the tree corresponds to a choice probability that is conditional on having reached the node from above. The shipper first chooses among rail, truck, and barge modes (M). A rail shipper then chooses a type of service (T), either single line or multiple line. A shipper choosing multiple line service then makes a choice (N) between two-line and three-or-more line service. Last, the shipper chooses the individual route (R).

The nested multinomial logit model simplifies this complex decision problem in two important ways. First, as with any logit model, the number of choice variables is reduced. Shippers consider a variety of characteristics such as price, speed, reliability, and other unmeasured or random factors in deciding which route to use. Shippers are assumed to consider the utility of the entire bundle of attributes associated with

---

Intermodal Policy Division, Association of American Railroads, 50 F Street, N.W., Washington, D.C. 20001.

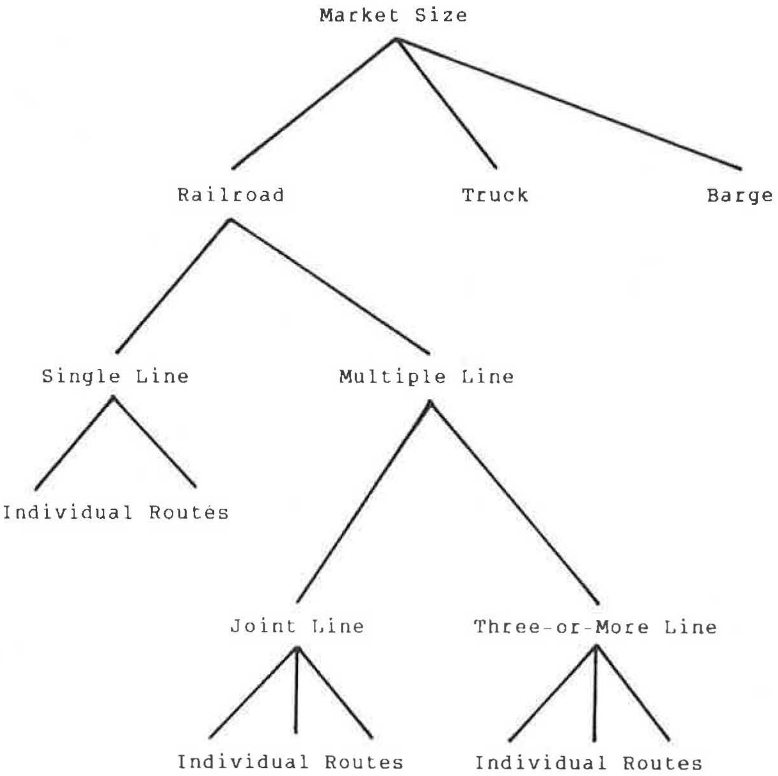

FIGURE 1 Shippers' decision tree.

each route and then choose the route with the maximum utility. This reduces the problem to that of choice over one summary variable, maximum utility.

Second, in contrast to other logit models, the choice of route may be broken down into separate decisions. The quantity carried on a given route may be written as the product of conditional probabilities.

$$Q_i = S \times P\,(M \mid S) \times P\,(T \mid M) \times P\,(N \mid T) \times P\,(R \mid N) \qquad (1)$$

where $P\,(M \mid S)$, for example, denotes the probability of mode M being chosen given the total quantity shipped. Each conditional probability may then be estimated by a separate equation.

It is usually assumed for simplicity that the parameters of the shipper utility functions in the nested multinomial logit model are linear. If so, each of the conditional probabilities is a linear function of the form

$$\text{LN}\,(Q_i/Q_j) = \Phi_R d + \theta_{R1}\,(p_i - p_j) + \theta_{R2}\,Y\,(h_i - h_j) + U_R \qquad (2)$$

$$\text{LN}\,(Q_{N3}/Q_{N2}) = \Phi_N d + \theta_N\,(I_{N3} - I_{N2}) + U_N \qquad (3)$$

$$\text{LN}\,(Q_{T2}/Q_{T1}) = \Phi_T d + \theta_T\,(I_{T2} - I_{T1}) + U_T \qquad (4)$$

$$\text{LN}\,(Q_{M2}/Q_{M1}) = \Phi_{M2} d + \theta_{M2}\,(I_{M2} - I_{M1}) + U_{M2} \qquad (5)$$

$$\text{LN}\,(Q_{M3}/Q_{M1}) = \Phi_{M3} d + \theta_{M3}\,(I_{M3} - I_{M1}) + U_{M3} \qquad (6)$$

$$\text{LN}\,(S) = \Phi_S d + \theta_S\,I_S + U_S \qquad (7)$$

where

p = rate per ton,
h = commodity value per ton,
Y = commodity value per ton,
I = expected maximum utility of the choices available,
d = vector of dummy variables for individual geographic markets,
Φ and θ = estimated coefficient vectors, and
U = error term that is approximately normally distributed.

Furthermore, McFadden (5) has shown that the expected maximum utility, I_{N3} for example, may be written as

$$I_{N3} = \text{LN}\left(\sum_{N=3} \{\exp\,[\Phi_R d + \theta_{R1}\,(p_i - p_j) + \theta_{R2}\,Y\,(h_i - h_j)]\} \right) \qquad (8)$$

so that each quantity is, ultimately, entirely a function of observable variables.

Economic theory imposes a number of coefficient restrictions on the parameters in this system of equations. First, it is necessary that $\theta_{R1} < 0$ in order for a price reduction to increase the quantity carried on a given route. Second, it is necessary that $\theta_{R2} < 0$ in order for a service time reduction to increase the quantity carried on a given route. This restriction also implies that higher-valued commodities should travel over the quicker route, all else equal. McFadden (*5*) has also shown it is necessary that

$$0 \leq \theta_N \leq \theta_T \leq \theta_{M2} = \theta_{M3} \leq \theta_S \leq 1 \qquad (9)$$

in order for this system of demand equations to be consistent with expected utility maximization on the part of shippers. If statistical tests show that all but the last of these coefficients are less than 1.0, then satisfaction of Equation 9 also implies that the shippers' decision tree in Figure 1 is correctly specified.

Cost of Transportation

Existing cost estimates were used to approximate the long-run marginal cost of transportation on each route. Railroad costs were estimated using Friedlaender and Spady's (*6*) estimate of short-run marginal costs (SRMC)

$$\begin{aligned} SRMC = \hat{C}_i \Bigg\{ (1/\psi_2) \Bigg[\gamma_2 &+ \sum_{i=1}^{5} D_{i2} \,\mathrm{LN}\,(w_i) \\ &+ \sum_{j=1}^{5} F_{j2} \,\mathrm{LN}\,(t_j) + G_{1,\,2} \,\mathrm{LN}\,(\psi_1) \\ &+ 2\, G_{2,\,2} \,\mathrm{LN}\,(\psi_2) \Bigg] + (1/\psi_{2m}) \Bigg[\beta_5 \\ &+ \sum_{i=1}^{5} B_{i5} \,\mathrm{LN}\,(w_i)\; F_{5,\,2} \,\mathrm{LN}\,(\psi_2) \Bigg] \Bigg\} \qquad (10) \end{aligned}$$

in the case of manufactured commodities and

$$\begin{aligned} SRMC = \hat{C}_i \Bigg\{ (1/\psi_2) \Bigg[\gamma_2 &+ \sum_{i=1}^{5} D_{i2} \,\mathrm{LN}\,(w_i) \\ &+ \sum_{j=1}^{5} F_{j2} \,\mathrm{LN}\,(t_j) + G_{1,\,2} \,\mathrm{LN}\,(\psi_1) \\ &+ 2G_{2,\,2} \,\mathrm{LN}\,(\psi_2) \Bigg] - (1/\psi_{2b}) \Bigg[\beta_5 \\ &+ \sum_{i=1}^{5} B_{i5} \,\mathrm{LN}\,(w_i) + F_{5,\,2} \,\mathrm{LN}\,(\psi_2) \Bigg] \Bigg\} \qquad (11) \end{aligned}$$

in the case of bulk commodities where

$\hat{C}_i$ = variable costs of firm i;
w_1 = factor price of equipment;
w_2 = factor price of general labor;
w_3 = factor price of yard and switching labor;
w_4 = factor price of on-train labor;
w_5 = factor price of fuel and materials;
t_1 = way, structures, and equipment capital;
t_2 = low-density route-miles;
t_3 = total route-miles;
t_4 = length of haul;
t_5 = ratio of manufactured to bulk commodity ton-miles;
$\psi_1, \psi_2, \psi_{2m}, \psi_{2b}$ = passenger, freight, manufactured, and bulk outputs, respectively; and
$\beta, \gamma, B, D, F, G$ = coefficients estimated by Friedlaender and Spady.

The average railroad firm in 1979 had an elasticity of short-run marginal cost with respect to output of 1.14, indicating slightly decreasing returns to scale. The long-run costs were less than the short-run costs at the point of approximation; they were also less elastic. In addition, economies of scope appear in the cost function only through the length of haul variable, which reflects a reduction in switching costs as length of haul increases. Constant or increasing returns to scale, economies of scope, or the ability of railroad firms to change fixed factor levels will all lower costs relative to the estimates used here. Lower railroad cost estimates imply that gains from merger are greater than estimated in this study.

Friedlaender and Spady (*6*) specify the long-run marginal cost (*LRMC*) of a specialized commodity trucking firm as

$$\begin{aligned} LRMC = \hat{C} \Bigg\{ (1/\psi) \Bigg[\gamma &+ \sum_{i=1}^{4} D_i \,\mathrm{LN}\,(w_i) \\ &\sum_{i=1}^{3} F_i \,\mathrm{LN}\,(t_i) + G \,\mathrm{LN}\,(\psi) \Bigg] \Bigg\} \qquad (12) \end{aligned}$$

where

$\hat{C}$ = estimated total costs of average trucking firm,
w_1 = factor price of labor,
w_2 = factor price of fuel,
w_3 = factor price of capital,
w_4 = factor price of purchased transportation,
t_1 = average load per truck,
t_2 = average length of haul,
t_3 = insurance per ton-mile,
ψ = firm's output in ton-miles, and
D, F, G = coefficients estimated by Friedlaender and Spady.

The average specialized commodity trucking firm in 1979 had an elasticity of long-run marginal cost with respect to output of 0.96, indicating slightly increasing returns to scale. The hypothesis that these firms exhibit constant returns to scale cannot be statistically rejected. In addition, economies of scope appear in the cost function only through the length of haul variable. Increasing returns to scale or economies of scope will lower truck costs relative to the estimates used here. Lower truck cost estimates imply that gains from railroad mergers are less than estimated in this study.

Long-run marginal costs for individual barge trips have been estimated by DeSalvo (*7*). In his specification the long-run marginal cost of barge service on a given route may be written as

$$LRMC = \frac{(c_t + c_b b)\,\{[\xi_1(LOH/v)] + [\xi_2 + \xi_3 b] + [l/(\mu - \lambda)]\}}{q \times LOH} \qquad (13)$$

where

c_t and c_b = cost per hour of tow boat and barge, respectively,

b = maximum number of barges in tow,
LOH = length of haul,
v = velocity of tow,
l = number of locks traversed,
μ,λ = service and arrival rates of tows at average lock,
q = maximum tonnage in tow, and
ξ_1,ξ_2,ξ_3 = coefficients estimated by DeSalvo.

This trip-specific cost function is probably a good approximation of the long-run marginal cost of barge service on a given route.

DATA

The recent Chessie System–Family Lines (CSX) merger was analyzed using data published for or updated to 1979. A detailed description of the data and their development is presented by Dennis (*8*).

The United States was divided into the nine regions that are shown in Figure 2. Each region served as both an origin and a destination. All traffic in each origin-destination pair was divided into the 18 commodity groups given in Table 1. Commodity groups that account for 5 percent or more of the railroad tonnage in each origin-destination pair were identified as major commodities. The major commodities in each origin-destination pair defined the surface freight transportation markets to be analyzed.

Traffic within each surface freight transportation market was classified first by mode and then by firm. Rail routes were identified by as many as three carriers using the One Percent Waybill Sample with Carrier Identification, a 1 percent sample of all railroad shipments terminated in the United States. All routes with 5 percent or more of the railroad traffic in a market were explicitly included in the analysis. The other rail routes were classified as one-, two-, or three-carrier miscellaneous routes. The truck and barge modes were each given their own generic route encompassing all traffic carried by those modes.

Demand Variables

The demand variables in this study were affected by three main data limitations. First, most econometric estimates of logit models use individual decisions as the unit of observation. Because data were lacking on individual shippers, an equivalent approach that used data aggregated over groups of shippers was adopted. Second, the data used were developed from a variety of sources because there is no one unified data set applicable to all modes. Ben-Akiva and Lerman (*4*) have shown that systematic errors resulting from this problem are entirely incorporated into the geographic coefficients, leaving the other coefficients unaffected. Third, although many characteristics affect shipper choice, suitable data were available only for tonnage, rates, and service time. The demand analysis was therefore limited to these variables. Of these three limitations, only the service time data appear to have had any substantial effect on the results.

Price data for railroad routes were taken directly from the One Percent Waybill Sample. Prices were assumed to be equal to estimated costs for the truck and barge modes. Service time data were developed using estimates by DeHayes (*9*) for the rail and truck modes and DeSalvo's (*7*) estimated process function for the barge mode. Data on commodity values were derived from the *Census of Transportation* (*10*) and a variety of other sources. Railroad tonnages were taken directly from the One Percent Waybill Sample. Truck tonnages were taken from the *Census of Transportation* and U.S. Department of Agriculture statistics. Barge tonnages were derived from the *Census of Transportation* and *Waterborne Commerce of the United States* (*11*).

The DeHayes study is somewhat dated and also appears to underestimate rail service time. Underestimating service time

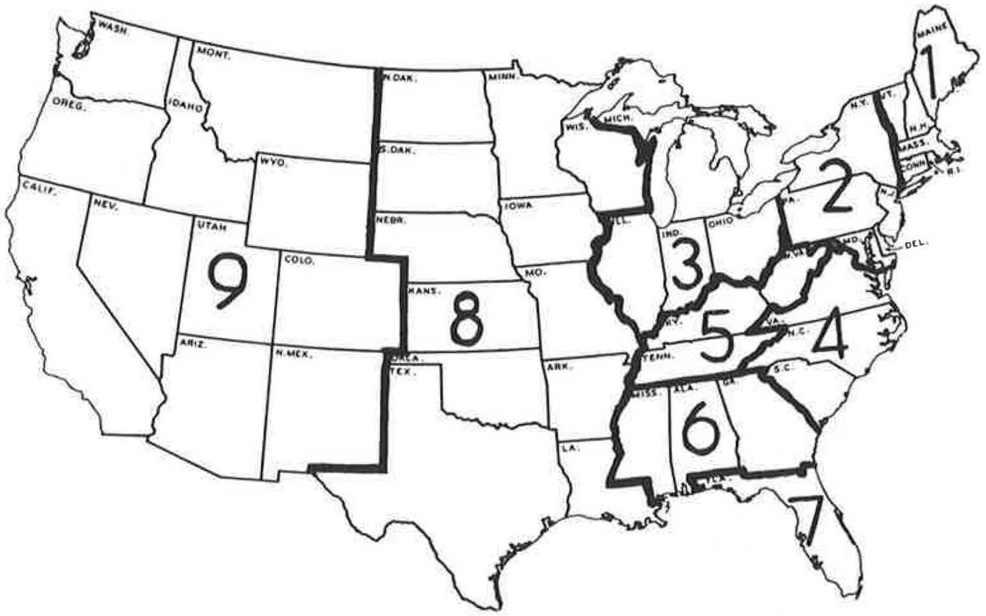

FIGURE 2 Origin and destination regions.

TABLE 1 COMMODITY DATA

	COMMODITY	STCC	VALUE PER TON ($) RAIL	TRUCK	BARGE
1.	Fresh Fruit & Veg.	012-019,09	1385	1385	1385
2.	Grain	011,204,209	140	140	140
3.	Minerals	10,14	26	26	26
4.	Food	20,x204,209	490	733	638
5.	Clothing	22,23,31	6998	4280	4833
6.	Lumber	08,24	170	155	74
7.	Furniture	25	2053	2300	1597
8.	Pulp and Paper	26	418	677	526
9.	Chemicals	28	278	589	195
10.	Refinery Products	13,29	126	101	131
11.	Rubber Products	30	2148	2266	2816
12.	Cement	32	104	64	50
13.	Primary Metals	33	506	769	694
14.	Fabricated Metals	34	1426	1612	2402
15.	Machinery	35,36	3602	5513	2546
16.	Transport Equipment	37	2590	3055	20723
17.	Miscellaneous	19,21,27,38	5293	2748	4128
18.	Coal	11	24	24	24

may bias the service time coefficient upward and may tend to overestimate both service time elasticity and gains from improved service. However, the DeHayes study remains the most complete study of which the author is aware and was therefore used in the analysis.

Cost Variables

Railroad factor prices were developed using *Indexes of Railroad Materials Prices and Wage Rates* (*12*). Railroad fixed factor levels were derived from reports to the Interstate Commerce Commission, as were both railroad output variables. Market length of haul and the proportion of manufactured ton-miles were taken from the One Percent Waybill Sample and *Moody's Transportation Manual* (*13*), respectively.

Truck factor prices were developed from *Trinc's Blue Book* (*14*) as was the estimate of insurance per ton-mile. Average load per truck and market length of haul were taken from reports to the Interstate Commerce Commission and the *Census of Transportation*, respectively.

Tow boat and barge operating costs were taken from annual estimate by the U.S. Army Corps of Engineers (*15*). The physical attributes of waterways and all other barge cost variables were taken from a Bechtel study (*16*) of the inland waterway system.

DEMAND ESTIMATION

Estimation Method

A nested multinomial logit model based on these aggregate data was estimated using the Berkson-Theil method as employed by Levin (*17*). Two-stage generalized least squares were used to estimate Equations 2–4 and 7 separately and to estimate Equations 5 and 6 jointly. This method of estimation accounts for heteroskedasticity resulting from sample size and will yield consistent estimates of the parameters.

Railroad and truck quantities were adjusted downward in cases in which waterways serve some but not all of a region. This adjustment eliminated the downward bias of model coefficients identified by Koppelman and Ben-Akiva (*18*). Last, variances were adjusted upward for Equations 3–7. This adjustment eliminated the downward bias of model variances identified by Amemiya (*19*).

Estimation Results

The estimated coefficients for Equations 2–7 and their adjusted *t*-statistics are given in Table 2. All of the price, service quality, and expected utility coefficients in Table 2 have the expected signs, and almost all are statistically significant at greater than the 95 percent confidence level. Only the

TABLE 2 DEMAND REGRESSION EQUATIONS

VARIABLE	(2)	(3)	(4)	(5)	(6)	(7)
OR1	-1.0742	2.5783	-2.6837	-	-	15.2791
	(-5.39)	(6.28)	(-6.28)	-	-	(69.42)
OR2	-1.1449	1.5841	-1.8716	0.4409	-1.9201	16.2002
	(-12.75)	(6.39)	(-7.80)	(0.82)	(-2.22)	(114.91)
OR3	-1.1632	1.3374	-0.2683	-	-	16.3902
	(-13.54)	(4.90)	(-0.82)	-	-	(105.30)
OR4	-1.0087	-	-1.7886	-0.1174	0.2836	16.3939
	(-8.26)	-	(-3.89)	(-0.07)	(0.10)	(67.70)
OR5	-0.9607	0.7818	-0.4675	0.9018	-1.2193	15.4053
	(-7.01)	(2.14)	(-1.08)	(1.19)	(-0.99)	(58.75)
OR6	-0.6593	1.4361	-0.5951	-	-	16.2064
	(-5.30)	(3.84)	(-1.54)	-	-	(62.74)
OR7	-1.5301	1.2048	-3.4201	-0.8747	-2.1019	18.0218
	(-5.64)	(2.58)	(-7.55)	(-0.48)	(-0.71)	(53.80)
DES1	0.7294	-	1.4792	-	-	-1.1409
	(1.13)	-	(2.45)	-	-	(-2.30)
DES2	0.3318	-2.7705	1.3111	0.4053	-4.5935	-0.6877
	(1.88)	(-5.04)	(1.48)	(0.41)	(-2.88)	(-2.88)
DES3	-	-	-	-	-	-
	-	-	-	-	-	-
DES4	0.2450	-2.4961	1.0894	1.5311	-0.1831	-2.1460
	(1.90)	(-8.03)	(2.38)	(0.95)	(-0.07)	(-8.32)
DES5	0.4712	-2.1789	0.1313	0.0386	0.8787	-0.3259
	(4.15)	(-5.30)	(0.34)	(0.10)	(1.52)	(-1.72)
DES6	0.2340	-2.1748	-0.5675	-1.1664	0.0765	-0.9870
	(2.03)	(-7.24)	(-1.62)	(-3.79)	(0.15)	(-4.39)
DES7	0.2953	-	-0.2157	-0.8167	-1.8777	-1.6345
	(1.82)	-	(-0.57)	(-0.56)	(-0.80)	(-5.98)
DES8	0.4256	-2.5990	1.2190	0.1559	1.5969	-1.5840
	(3.91)	(-7.88)	(4.00)	(0.50)	(3.17)	(-9.44)
DES9	0.1518	-2.3008	1.0300	-	-	-1.5073
	(1.03)	(-6.58)	(3.11)	-	-	(-8.73)
θ_1	-0.02053	0.21501	0.65368	0.65368	0.65368	0.97002
	(-3.05)	(2.72)	(16.88)	-	-	(11.27)
θ_2	-0.00029	-	-	-	-	-
	(-1.01)	-	-	-	-	-
N	1058	356	325	90	90	356
F	42.02	11.17	29.28	-	-	6961.90
R^2	.5672	.4881	.7415	.7450	.7450	.9985
SEE	5.606	1.281	6.373	1.277	1.277	28.044

service time coefficient is not statistically significant, probably because of the limitations of the service time data discussed previously. White *(20)* tests on Equations 2–4 and 7 indicate that the residuals of these equations are homoskedastic, so that heteroskedasticity is not a concern in these equations and the equations are likely to be correctly specified. There is no analogous test for Equations 5 and 6.

The initial estimates of the coefficients in Equations 5 and 6 did not satisfy the inequality restrictions in Equation 9. Violation of these restrictions would lead to perverse forecasting results. Equations 5 and 6 were therefore reestimated to satisfy this constraint by setting $\theta = 0.65368$. An approximate chi-squared test indicated that this restriction was statistically significant at the 95 percent confidence level.

Adjusted *t*-tests on the estimates of θ_N, θ_T, θ_{M2}, and θ_{M3} all rejected the hypothesis that any of these coefficients were equal to 1.0 at better than the 95 percent confidence level. The shippers' decision tree in Figure 1 therefore correctly represents the routing decisions reflected in the data.

Interpretation

Price and service elasticity calculations depend on the modes present in the market and on the values of the demand variables. Assume in Figure 1 that shippers choose from among two single-line routes, three joint-line routes, a three-line route, a generic truck route, and a generic barge route. The elasticity of quantity (Q) carried on a given route with respect to an attribute (X) on this or any other route may then be written as

$$\begin{aligned}\varepsilon = {} & \theta_S \theta_M \theta_T \theta_N \alpha X P(M|S) \times P(T|M) \times P(N|T) \\ & \times P(R|N) + \theta_M \theta_T \theta_N \alpha X [\delta_{mm} - P(M|S)] \\ & \times P(T|M) P(N|T) \times P(R|N) + \theta_T \theta_N \alpha X \delta_{mm} [\delta_{tt} \\ & - P(T|M)] P(N|T) \times P(R|N) \\ & + \theta_N \alpha X \delta_{mm} \delta_{tt} [\delta_{nn} - P(N|T)] P(R|N) \\ & + \alpha X \delta_{mm} \delta_{tt} \delta_{nn} [\delta_{rr} - P(R|N)] \qquad (14)\end{aligned}$$

where

θ = estimated expected maximum utility coefficients,
α = estimated attribute coefficient,
P = conditional probabilities, and
δ = indicator function ($\delta_{mm} = 1$ if $m = m$, 0 otherwise)

Intuitively, each additive term represents a different level of the decision tree. The first additive term takes account of the effect on overall market size; the last four terms take account of the effect on market share. The $\delta - P$ terms represent the amount of other traffic available at that level of the tree, and the $\theta \alpha X$ terms represent how much a change in one route's attribute affects traffic at that level of the tree. The conditional probability terms represent how much of the change in traffic filters down to the individual route.

The own-price and own-service elasticities for this example decision tree follow.

Elasticity	*Value*
Single-line	
Own price	−0.40
Own service	−0.67
Joint-line	
Own price	−0.52
Own service	−0.86
Three-line	
Own price	−0.17
Own service	−0.27
Truck	
Own price	−0.07
Own service	−0.11
Barge	
Own price	−0.07
Own service	−0.11

The own-price elasticities of demand for an individual route, calculated at the sample means, are in the range of the aggregate price elasticities calculated by Levin (*17*), Friedlaender and Spady (*6*), and others.

The own-service elasticities at the sample means are uniformly higher than the own-price elasticities. Service becomes even more important for higher-valued commodities whereas price is more important for sufficiently low-valued commodities such as coal and grain. These observations support the contention that most shippers value service competition more than they value price competition.

The coefficients in Equation 2 may also be used to compute shippers' implicit value of time. Dividing the service time coefficient (utility per day in transit) by the price coefficient (utility per dollar of rate) indicates that each dollar is worth about $1.014 per day in transit. This high discount rate may reflect a variety of different factors including the opportunity cost of capital, service time acting as a proxy for other reductions in nontransport logistics costs, or an upward bias in the service time coefficient.

WELFARE ANALYSIS

Theory

Changes in prices, service times, and costs result in changes in the total surplus generated in a surface freight transportation market. If income effects are zero, the total surplus (TS) resulting from the merger in an individual market may be written as

$$\begin{aligned}TS = \sum_R {} & \{Q_R' [-(c_R'' - c_R')] \\ & + (p_R' - c_R'')(Q_R'' - Q_R') + 0.5[(p_R'' - p_R') \\ & + (h_R'' - h_R') Y] (Q_R'' - Q_R')\} \qquad (15)\end{aligned}$$

where

$'$ = premerger values,
$''$ = postmerger values,
R = route indexes,
Q = demand function, and
c = marginal cost.

The first term in Equation 15 represents the cost savings on route r attributable to the merger. The second term represents the additional gain or loss in producers' surplus. The third term represents the gain or loss in consumers' surplus. Pure transfers from producers to consumers as a result of lower prices are not counted as part of the change in total surplus.

Simulation

Equation 15 was used to estimate the change in total surplus in 61 surface freight transportation markets as a result of the CSX merger.

Premerger values for prices, quantities, service times, and commodity values were taken directly from the sources described in the third section of this paper. Premerger marginal costs for railroads were estimated using Equations 10 and 11 and the data described in the third section of the paper. The marginal costs for the upstream and downstream segments were estimated using length of haul and other variables pertaining to the firm operating that segment. Costs were computed for each segment and then added to get the cost of the route. Marginal costs for truck and barge were estimated using Equations 12 and 13 and the data described in the third section of the paper.

Postmerger prices were generated by assuming that improved service on the newly merged route allows the merged firm a 10 percent greater markup over its new costs. All other firms were assumed to maintain their premerger rates. Faster postmerger service times on the merged route were developed using the DeHayes estimates described in the third section of the paper. Postmerger quantities were developed by using postmerger prices and service times in Equations 2–7. Postmerger marginal costs on the merged routes were estimated using Equations 10 and 11. Length of haul on the merged route was taken as the sum of the lengths of haul on the upstream and downstream segments. This lowered the marginal cost of the merged route relative to the marginal costs of the two unmerged segments, thus generating a cost savings. All other cost function arguments for the merged firm were evaluated at ton-mile weighted averages of the premerger values.

Analysis

The results of the CSX merger simulation are given in Table 3. The first three columns of this table list the origin, destination, and commodities that define the individual surface freight transportation markets. The change in total surplus resulting from the merger is given in the fifth column. The simulation indicates that the CSX merger increases total surplus by $345 million per year, assuming all other factors are unchanged. This gain in total surplus results mainly from railroad cost reductions associated with increased length of haul on the merged route. Reduced transit time on the merged route also increases total surplus, especially for higher-valued commodities for which the value of improved service is greater.

In 46 of the 61 transportation markets studied, costs on the merged route declined, prices also declined, and service time improved. These effects caused consumers' surplus, producers' surplus, and total surplus all to increase unambiguously. These transportation markets accounted for the vast majority of the welfare changes associated with the merger. The simultaneous increase in consumers' surplus, producers' surplus, and total surplus is consistent with an efficiency explanation of end-to-end railroad mergers.

Although an unambiguous increase in consumers' surplus, producers' surplus, and total surplus was the most common simulation outcome, different markets displayed different results. In one market involving a high-valued commodity, the averaging process for the cost function arguments caused a cost increase and consequent price increase. The resulting losses in consumers' and producers' surplus were more than offset by valuable service improvements so that total surplus increased in this market.

In eight markets, mostly involving low-valued commodities, the assumed price increases outweighed the value of service improvements so that the change in consumers' surplus was negative. However, cost savings in these markets

TABLE 3 EFFECT OF CSX MERGER ON TOTAL SURPLUS

ORIGIN	DESTINATION	MAJOR COMMODITIES	TS1	TS2	TS3
1	4	6,7,8,9	7.8	7.9	8.0
1	6	8,12	7.0	7.1	7.1
1	7	8	2.1	2.1	2.1
2	4	3,6,8,9,12,13,18	16.9	16.9	17.1
2	6	8,12,13,16	107.8	108.6	108.8
2	7	4,8,9,16	71.0	71.7	73.8
3	4	2,8,12,16,18	-0.2	-0.2	1.3
3	5	2,3,18	-9.3	-9.3	-9.2
3	6	2,8,10,12,13,16	36.4	37.1	37.7
3	7	2,8,9,16	9.9	10.1	10.5
4	4	2,3,6,12,18	14.4	14.4	14.4
4	5	18	11.0	11.0	11.0
4	6	2,6,8,9,12,18	21.5	21.5	21.5
4	7	3,4,8,9,12	12.5	12.5	12.5
5	6	2,6,12,18	33.1	33.1	33.7
		TOTAL	341.9	344.5	350.3

increased producers' surplus enough that total surplus increased.

In five markets, all involving low-valued commodities, the assumed price increases outweighed the value of service improvements so that the change in consumers' surplus was negative. Cost savings were not sufficient to eliminate these losses, so total surplus declined.

In one market involving a low-valued commodity, the averaging process for the cost function arguments again caused a cost increase and consequent price increase. Service improvements in this market had relatively little value and were insufficient to offset losses in consumers' and producers' surplus. Total surplus therefore declined in this market.

Sensitivity of Results

The sensitivity of the analysis to the assumed pricing policy was tested by simulating two alternative pricing policies. In the first scenario the merged firm sets rates on its newly merged route at the assumed regulatory maximum while all other firms maintain their premerger prices. This corresponds roughly to monopolistic behavior on the part of the merged firm. In the second scenario the merged firm engages in the same pricing that it did in the simulation. All other firms lower their rates to the merged firm's new rate or to their cost, whichever is greater. This scenario corresponds to a price war between competitors.

The results of these simulations vary from $340 million to $350 million per year as shown in Columns 4 and 6, respectively, of Table 3. The results are fairly insensitive to the assumed pricing policy for three reasons. First, the premerger prices tended to be near the assumed regulatory maximum so that there was relatively little change in price between the simulation and the first scenario. Second, the CSX lines tended to have higher rates than their competitors even after the merger. This made price wars among competitors fairly infrequent and caused relatively little change in prices between the simulation and the second scenario. Third, the relatively low price elasticities resulted in fairly small quantity changes for a given change in prices.

Changes in total surplus resulting from the merger are likely to be larger in the long run. Changes in transport rates or service will make shippers more likely to switch modes, relocate, use alternative commodities, or find other sources or markets for existing commodities. Any of these actions will make the demand for transportation on a given route more elastic, increasing both the welfare gains and the welfare losses associated with the merger. Alternatively, stricter regulations on the abandonment of fixed factors such as track would raise costs and reduce welfare gains.

CONCLUSIONS

The results of this study indicate that the CSX merger increased total surplus by $340 million to $350 million per year, assuming all other factors remained unchanged. The main source of increase was railroad cost reductions. These cost reductions resulted from increased length of haul on the merged route. Reduced transit time on the merged route also increased total surplus, but by a lesser amount. This effect was relatively more important for higher-valued commodities. Price changes had little effect on total surplus. Because the demand for transportation on an individual route was relatively inelastic, price changes resulted mainly in pure transfers between producers and consumers.

These results should not be interpreted to mean that any and all end-to-end mergers confer massive benefits. As noted before, different markets in this study displayed different results, and the benefits of improved service may be overestimated. In addition, there is the question of whether firms need to merge in order to gain the benefits of merger. However, it does appear that end-to-end railroad mergers with similar characteristics may well confer substantial economic benefits.

ACKNOWLEDGMENTS

This paper is based on the author's Ph.D. dissertation at Northwestern University and represents the views and assumptions of the author, not necessarily those of the Association of American Railroads. The author is grateful to Leon Moses, Marcus Alexis, and Ian Domowitz for their guidance and encouragement. He would also like to thank Ann Friedlaender, Ted Keeler, Rick Levin, Cliff Winston, and Malcolm Coate for their valuable comments. Any remaining errors are solely the author's responsibility.

REFERENCES

1. R. C. Levin and D. Weinberg. Alternatives for Restructuring the Railroads: End-to-End or Parallel Mergers? *Economic Inquiry*, July 1979, pp. 371–388.
2. R. G. Harris and C. Winston. Potential Benefits of Rail Mergers: An Econometric Analysis of Network Effects and Service Quality. *Review of Economics and Statistics*, Feb. 1983, pp. 32–40.
3. B. Klein, R. G. Crawford, and A. A. Alchian. Vertical Integration, Appropriable Rents, and the Competitive Contracting Process. *Journal of Law and Economics*, Oct. 1978, pp. 297–326.
4. M. Ben-Akiva and S. R. Lerman. *Discrete Choice Analysis*. MIT Press, Cambridge, Mass., 1985.
5. D. McFadden. Quantitative Methods for Analyzing Travel Behavior of Individuals: Some Recent Developments. In *Behavioural Travel Modelling* (D. A. Hensher and P. R. Stopher, eds.), Croom Helm, London, England, 1979, pp. 279–318.
6. A. F. Friedlaender and R. Spady. *Freight Transport Regulation: Equity, Efficiency, and Competition in the Rail and Trucking Industries*. MIT Press, Cambridge, Mass., 1980.
7. J. S. DeSalvo. *Linehaul Process Functions for Rail and Inland Waterway Transportation*. Ph.D. dissertation. Northwestern University, Evanston, Ill., 1968.
8. S. M. Dennis. *The Effect of End-to-End Railroad Mergers on Economic Welfare*. Ph.D. dissertation. Northwestern University, Evanston, Ill., 1985.
9. D. W. DeHayes, Jr. *The General Nature of Transit Time Performance for Selected Transit Modes in the Movement of Freight*. Ph.D. dissertation. Ohio State University, 1968.
10. *1977 Census of Transportation:* Vol. 3, *Commodity Transportation Survey*. Bureau of the Census, U.S. Department of Commerce, 1980.
11. U.S. Department of the Army. *Waterborne Commerce of the United States, 1979*. 5 vols. U.S. Army Corps of Engineers, Washington, D.C., 1980.
12. *Indexes of Railroad Material Prices and Wage Rates*. Economics and Finance Department, Association of American Railroads, Washington, D.C., 1981.
13. *Moody's Transportation Manual, 1979*. Moody's Investors Services, New York, 1980.

14. *Trinc's Blue Book of the Trucking Industry, 1979.* Trinc Transportation Consultants, Washington, D.C., 1980.
15. *Towboat and Barge Operation Costs.* Water Resources Support Center, U.S. Army Corps of Engineers, Fort Belvoir, Va., March 10, 1981.
16. *Assessment of the Potential Role of Inland Waterways in an Integrated U.S. Transportation System.* Bechtel Corporation, San Francisco, Calif., 1975.
17. R. C. Levin. Allocation in Surface Freight Transportation: Does Rate Regulation Matter? *Bell Journal of Economics*, Spring 1978, pp. 18–45.
18. F. S. Koppelman and M. Ben-Akiva. Aggregate Forecasting with Disaggregate Travel Demand Models Using Normally Available Data. Presented at the World Conference on Transport Research, Rotterdam, The Netherlands, 1977.
19. T. Amemiya. On a Two-Step Estimation of a Multinomial Logit Model. *Journal of Econometrics*, Vol. 8, 1971, pp. 13–21.
20. H. White. A Heteroskedasticity-Consistent Covariance Matrix Estimator and a Direct Test for Heteroskedasticity. *Econometrica*, May 1980, pp. 817–838.

Publication of this paper sponsored by Committee on Surface Freight Transport Regulation.

Evaluation of the Viability of a Regional Railroad System in the Palouse Region of Washington and Idaho

KEN L. CASAVANT, J. C. LENZI, RON KERR, RICHARD TAYLOR,
AND JAMES JACKSON

Changing economic conditions in the nation are causing significant rail line abandonment, a phenomenon that is quite apparent in the Palouse region of southeast Washington and north central Idaho. This regional study was conducted to develop a procedure for evaluating the economics of the existing rail system in a region and identify alternatives that have the potential to retain essential rail service before piecemeal abandonment. The study included an estimate of existing carrier costs (using Rail Form A costs and the 49 CFR 1152 abandonment costing process) and revenue estimates. Alternative configurations, ownership, and marketing approaches were also considered. The procedure worked well in evaluating the viability of rail systems that are operated by existing rail carriers. The results showed ratios of expenses to revenues considerably over 100 for the majority of the existing or restructured lines. It did appear that most lines were candidates for abandonment. Short-line operations and possibly public assistance could have a positive influence on the economics of the region's rail service. Local interest and support should be identified before either option is attempted. Road impacts resulting from rail line investment decisions by shippers and governmental actions should be part of the discussion when planning for the future railroad structure.

The condition of the U.S. general economy and the status of the transportation network in the United States have been interdependent since the formation of the country. Access to resources for growth, expansion, and consolidation depended heavily on transportation linkages. Railroads have been a major factor in the development of the nation's dominant industries: agriculture, forest products, mining, and industrial products. Today, changing conditions have resulted in the abandonment of rail branch lines. The major contributing factors are economic conditions in the agricultural and forest products industries, changes in transportation technology, railroad deregulation (Staggers Rail Act of 1980), the Interstate system, and competition from truck-barge service.

Nowhere is this activity more readily apparent than in the Palouse region of southeast Washington and north central Idaho. In 1970 this area had 825 mi of rail line trackage. Since then 285 mi or 35 percent has been lost through abandonment. As they do throughout the United States, such abandonments raise concerns about the availability of transportation services and the ability to move bulk commodities efficiently in the future. Many more abandonments are possible. With the loss of rail service, shippers often face increased handling and transportation costs. In addition, there can be impacts on the road system because some state highways and many local roads were not built to carry the weight of the cargo shifted from rail to trucks. This situation results in substantial roadway deterioration and leads to additional demands for funds to maintain these roadways. These concerns led to the study reported in this paper.

The purpose of the study was to evaluate the economics of the existing railroad system in the Palouse region and identify alternatives that have the potential to retain essential rail service before piecemeal abandonment. The study included an estimate of the existing carriers' costs (using Rail Form A costs and the 49 CFR 1152 abandonment costing process) and revenue estimates. In addition, an evaluation of more efficient alternative configurations of the existing system was made to test for financial viability. Other options such as contract rates, short-line operations, and public agency ownership were also considered.

STUDY AREA

The Palouse region includes southeastern Washington and north central Idaho. Although the lines of the Camas Prairie Railroad east of Lewiston are not in the Palouse region, they were included in this study because they provide an alternate connecting outlet for the Palouse lines and, therefore, must be considered in any analysis of a Palouse regional rail system. The region's rail system and the rail lines analyzed are shown in Figure 1. A comparison between 1970 and present rail service in the area is shown in Figure 2. This study focuses on rail service in seven counties: Whitman County and the southern portion of Spokane County in Washington and Clearwater, Idaho, Latah, Lewis, and Nez Perce counties in Idaho.

BACKGROUND

Agriculture is the main economic activity and generates the principal transportation demand in the Washington portion of

---

K. L. Casavant, Department of Agricultural Economics, Washington State University, Pullman, Wash. 99164-6210. J. C. Lenzi and J. Jackson, Planning, Research and Public Transportation, Washington Department of Transportation, Transportation Building, KF-01, Olympia, Wash. 98504-5201. R. Kerr, Idaho Transportation Department, Box 7129, Boise, Idaho 83707. R. Taylor, Wilbur Smith Associates, P.O. Box 92, Columbia, S.C. 29202.

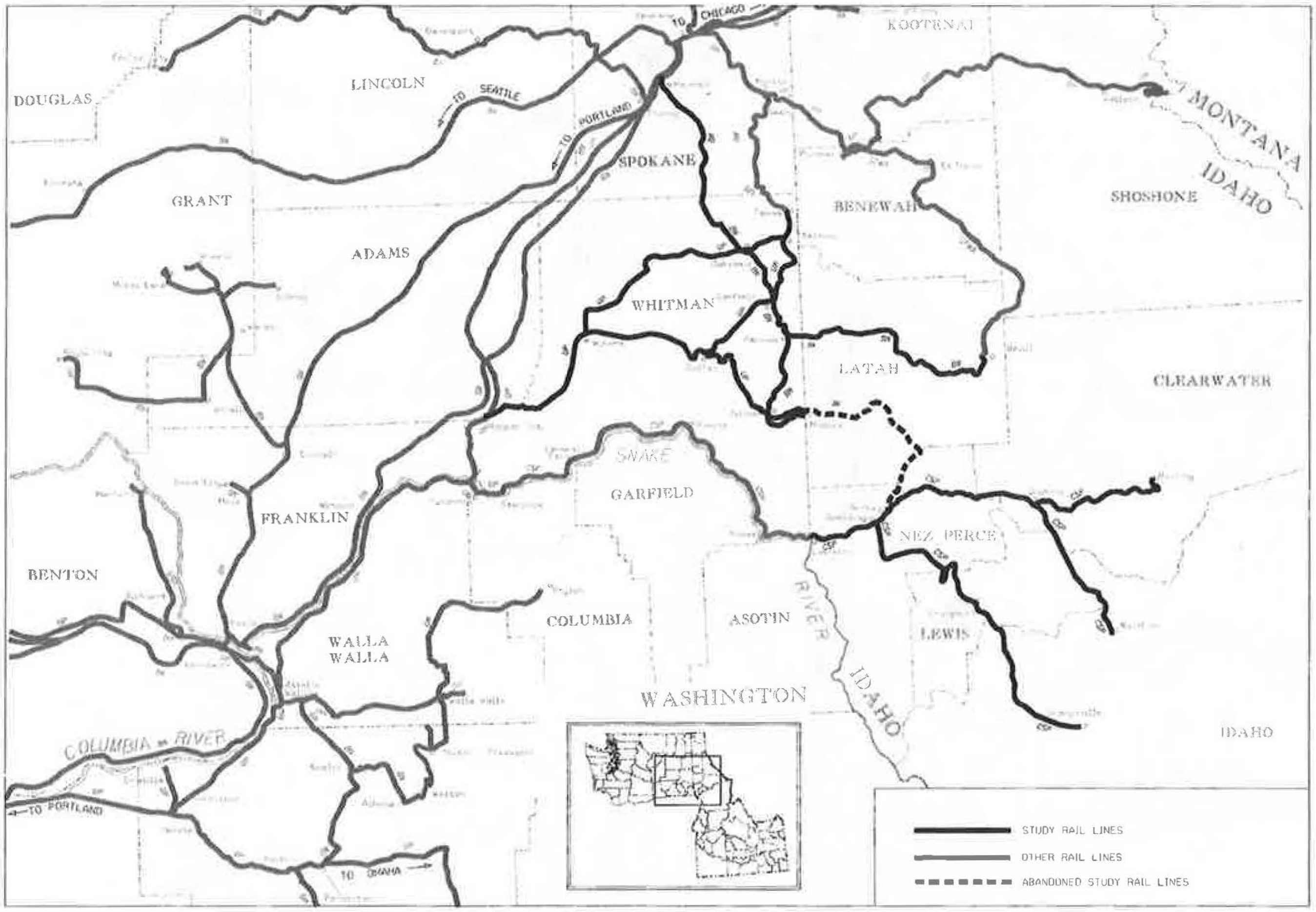

FIGURE 1 Palouse Empire regional rail study: present.

the study area. In the Idaho portion, forest products industries are dominant, although agriculture is significant.

Both the agricultural and forest products industries have rebounded somewhat from the economic slump of the early 1980s. Grain production (wheat and barley) in the Washington portion was 224 million bushels in 1984 and a relatively low 185 million in 1985 because of an extended drought. In the Idaho portion, 170 million bushels and 144 million bushels were produced, respectively. In recent years, the Idaho study area counties' timber harvest has been in the range of 600 million to 800 million board feet.

Industry experts do not foresee significant increases in production in either industry within the study area. Local conditions and overall market conditions constrain production by both industries. The number of housing starts is the major influence on forest products. For grain, nearly all of the tillable land is now in production, leaving little room for expansion. Therefore the commodities available for shipment in the future are estimated to be at or slightly above current levels.

RAIL LINES—USE AND COMPETITION

The 540 mi of rail lines still in operation in the study area include lines operated separately by the Burlington Northern Railroad (BN), the Union Pacific Railroad (UP), and the Camas Prairie Railroad (CSP), a regional short line jointly owned by BN and UP. Approximately 25 percent of the mileage is operated by BN, 31 percent by UP, and 44 percent by CSP. All of the eight branch lines evaluated are capable of accommodating the weight of fully loaded 100-ton hopper cars, but five branch-line operations have speed restrictions, some as low as 10 mph. The rail lines studied are shown in Figure 1.

The BN lines averaged 3,297 carloads per year during the 1983–1985 period, and the UP lines averaged 3,282 carloads, generating estimated annual revenues of $6.1 million (including abandoned Moscow to Arrow line in estimate) and $3.9 million, respectively. The disparity in revenues is primarily attributable to the principal type of commodity originating on each carrier. The UP lines carry mostly grain whereas BN carries grain and some wood products, and the CSP mostly wood products and primary forest products. The 1983–1985 average revenue per carload for the study area traffic was $800 for grain; $3,500 for lumber and other wood products; and $200 for logs, chips, and other primary forest products (Table 1). The low revenue attributed to the latter is due to the nature of the movement of high volumes of raw materials moving short distances with associated low expenses. The annual average traffic volumes and revenues generated by the existing lines are summarized in Table 2.

Several factors interact to cause the significant rate difference between the area's two major commodities—grain and

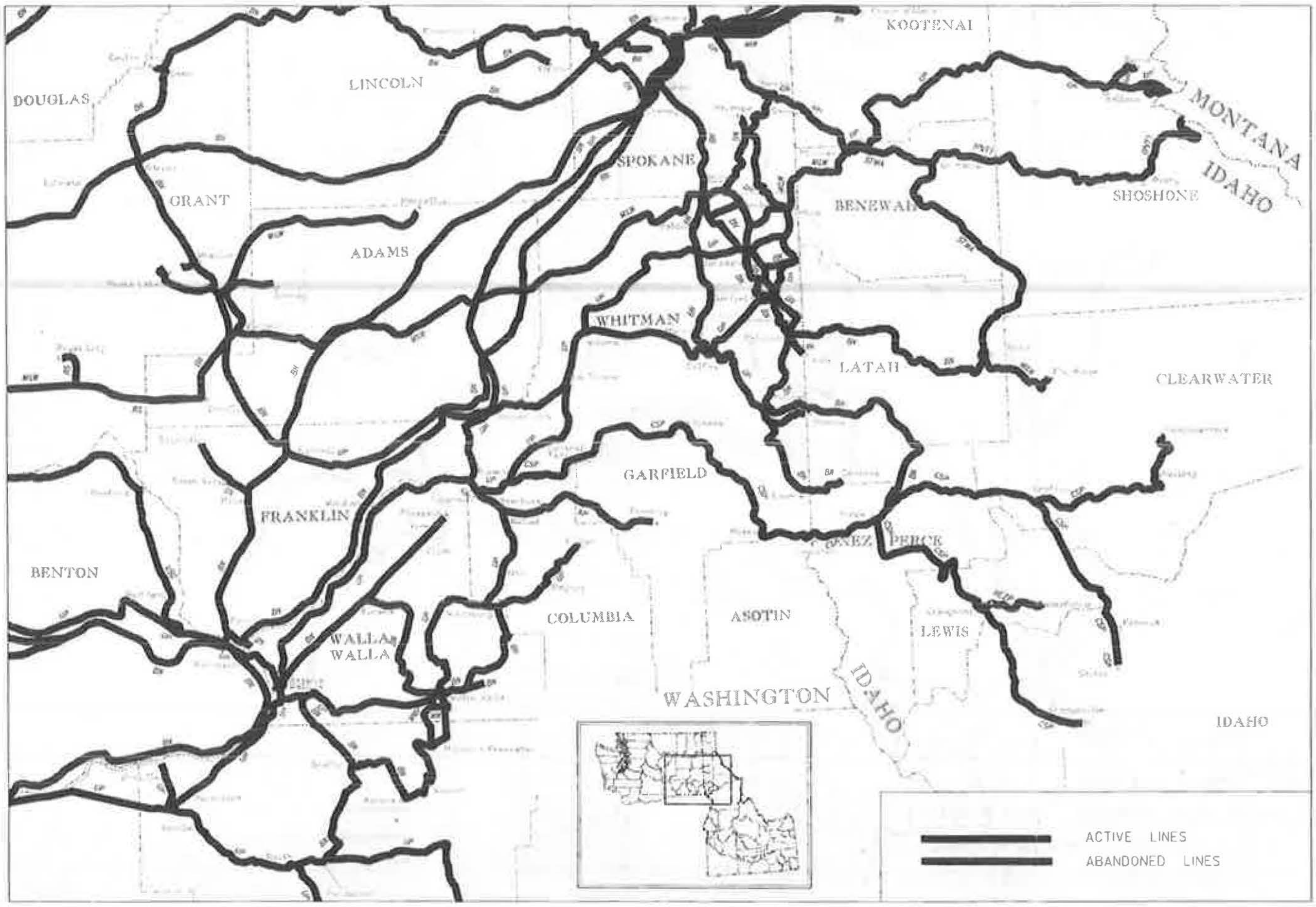

FIGURE 2 Palouse Empire regional rail study: comparison of 1970 and present.

TABLE 1 ANNUAL AVERAGE TRAFFIC VOLUMES AND REVENUES: STUDY AREA RAIL LINES BY COMMODITY GROUP (1983–1985)

Commodity Group	Number	Percent	Average Revenue Per Carload
Grain	4,079	22	$ 800
Other Agricultural Products (Peas and Lentils)	439	2	$3,300
Wood Products (Lumber, Plywood, etc.)	6,653	36	$3,500
Primary Forest Products (Poles, Chips, Logs, etc.)	6,203	34	$ 200
All Others	1,088	6	$2,100
TOTALS	18,462	100	

NOTE: Annual average based on approximately 3 years of data (1983–1985).

TABLE 2 ANNUAL AVERAGE TRAFFIC VOLUMES AND REVENUES BY STUDY AREA RAIL LINE SEGMENT (1983–1985)

Line Segment	Segment Length (miles)	Traffic (carloads)	Revenues ($000)
Marshall through Oakesdale	37.8	1,072	$ 866
Oakesdale through Fallon	28.3	506	510
Fallon through Moscow	20.9	102	241
Moscow to Arrow (abandoned 9/84)	36.7	234	499
Palouse through Bovill	46.7	1,383	3,977
BNRR Total	170.4	3,297	$ 6,093
Hooper Junction through Willada	37.5	929	$ 779
Willada to Seltice	36.5	374	396
Winona through Colfax	25.6	646	637
Colfax to Tekoa	38.4	266	391
Colfax through Moscow	28.1	1,067	1,650
UPRR Total	166.1	3,282	$ 3,853
Lewiston through Kooskia	71.5	*	$ *
Spalding through Grangeville	66.5	*	*
Orofino through Revling	31.1	*	*
	169.1	*	$20,529

NOTE: Annual average based on 1983–1985 data for all lines except the Moscow through Arrow segment that was abandoned in September 1984. Traffic statistics for the CSP segments are confidential because of the competitive relationship between the parent companies, BN and UP.

wood products. Grain traffic rates from the Palouse region are kept down by intermodal competition and a relatively short haul to deep-water ports on the lower Columbia River. Nationally, grain is the lowest commodity group in terms of revenue per ton-mile carried. Rates have decreased in this area in part because of competition with Columbia and Snake River barge rates. Lumber and wood products, on the other hand, can command higher rates, as a result of less intermodal competition, and typically have longer hauls to market, which result in higher revenues.

Proximity to the Columbia or the Snake River is an important determinant of whether grain is shipped by truck to river barges or by rail. The average distance to the river from grain elevators using truck-barge is 40 mi. The development of rail multiple-car loading facilities (MCLFs) in recent years has enabled railroads to compete more effectively with water carriers. This new technology allows the rapid loading of 25- or 26-car multiple trains and has lowered rail operating costs, resulting in rate reductions for wheat of more than $2/ton between 1981 and 1984.

LINE EVALUATIONS

A significant change resulting from the 1980 Staggers Rail Act (railroad deregulation) is increased emphasis on ensuring that rail carriers earn an adequate rate of return on investment. Thus the revenue/cost relationship has become more important, if not the primary factor, in identifying viable rail lines and those that will possibly become candidates for abandonment. The analyses for this study are based on estimates of existing carrier costs and revenues generated from the area's traffic. Operating expenses included maintenance of way, crew cost, locomotive and freight car costs, and return on net liquidation value. These costs and revenues for the branch lines under study were developed using standard industry methods.

The analyses of these rail lines were done with a computer network simulation model. This model represented active stations as nodes and track mileage between stations as links. Estimated BN or UP revenue at each station was calculated by commodity group on the basis of tariffs, shipper interviews, and waybill samples. Total revenues for line segments were available for the BN portions, and estimated station totals were calibrated to these totals for BN lines. Estimated Rail Form A system haul variable expense for each group was deducted from this revenue, leaving a "branch available" revenue total attributable to each station. This was matched against two classes of on-branch expenses. Expenses that vary with the number of cars handled at a station (freight car costs and switching costs) were attributed to each node. Expenses that vary with branch mileage operated (maintenance of way, line-haul operating costs, ownership and tax expenses) were assigned to each link. A unit cost for node (volume variable) and link (distance variable) costs was assigned to each line reflecting differing track conditions, crew requirements, and so forth. With this information, the program computed branch expenses based on summations of the traffic at each node and the mileage of each link. Existing base operating results were the result of the addition of the relevant segments. Additional costing details are contained in the Appendix.

Alternative 1: Existing Base System

This alternative assumes that the existing system will continue to be operated by the existing major carriers without significant changes in operation. The results of the financial analysis are summarized in the top part of Table 3. Overall, the BN lines lost an estimated $0.9 million on revenues of $5.6 million (–15 percent), UP lines lost $1.9 million on revenues of $3.9 million (–50 percent), and CSP lines had a surplus of $1.2 million on revenues of $20.5 million (+6 percent). On a line-by-line basis, the Operating Surplus/Loss column indicates whether revenues are sufficient to offset expenses and reveals that only two lines, the Lewiston-Kooskia (CSP) and Orofino-Revling (CSP), have significant operating surpluses.

Alternative 2: Restructure Base System

Because the base system reflected a large operating loss, an analysis of various options for restructuring existing lines was undertaken. Again, existing BN and UP estimated costs and revenues were assumed.

The node-by-node (station-by-station) cost and revenue approach revealed a picture of the weak and strong components under existing ownership of the system and permitted the selection of segments that appeared to have the best prospects of viability after restructuring. The process began by selecting and linking the points with the largest traffic generation potential (e.g., lumber mills, MCLFs, and other major rail users). The restructured alternatives included both single- and multiple-railroad combinations, as shown in Figures 3 and 4. Adjustments were made in the unit costs to reflect changed conditions, such as lengths of runs and required service frequency, necessary for the restructured alternatives. The major restructuring alternatives are shown in Figure 4.

A summary of the costs and revenues associated with the restructured alternatives is presented in the bottom part of Table 4. Under these cost and revenue assumptions, the restructuring failed to identify an economically viable rail system that included a return on net liquidation value under existing ownership. In certain circumstances, on the basis of assumptions concerning traffic and connections not fully investigated in the study, it appears that two segment combinations have the potential to operate with a surplus. However, the majority of the lines failed to support the costs associated with their ownership and operation. In essence, the analysis revealed that neither the existing system nor a restructured system based on existing conditions can be operated profitably by a major railroad company. Even with restructuring, most of the lines meet the qualifications for abandonment under existing statutes on a revenue-cost basis when operations are provided by the existing major carriers.

Other Rail Alternatives

Because a viable system could not be identified within the existing system or by restructuring, other alternatives were suggested in an attempt to retain essential rail service in the region. The alternatives that assume continued carrier ownership and operation use either contract rates between the railroad and shipper or rate level increases. Other alternatives involve short-line operation and public agency ownership or participation.

Contract Rates

Contract rates, brought into wide use by the Staggers Act of 1980, allow railroads to negotiate confidential contracts with individual shippers for specific services, prices, and other conditions. This mechanism could result in an agreement between shipper and carrier on the level of traffic or subsidy and other conditions needed to ensure control of costs and revenues to allow continuation of rail service. Approximately one-third of the shippers in the study area have used or are using contract rates.

Rate Increases

One way to increase revenues may be to increase rates. However, in most cases, the lines with the largest operating deficits are those that face substantial competition from truck-barge. This competitive environment has not only kept rate levels down, it has actually caused them to drop. Still, there are areas in which current rail rates might be increased without loss of traffic to other competitive modes. Whether a rate increase sufficient to retain service can be implemented to create a profitable operation in a specific market would have to be evaluated by separate analyses on a case-by-case basis. It is possible that the construction of MCLFs has made elevators

TABLE 3 RAIL SEGMENT OPERATING SUMMARY, ESTIMATED AVERAGE ANNUAL OPERATING REVENUES AND EXPENSES (1983–1985) UNDER CURRENT OWNERSHIP

		Total System Revenue	Total System Expenses	Operating Surplus/ (Loss)	Expenses as % of Revenue
Summary: Existing Railroad Totals					
Burlington Northern Lines		$ 5,594,000	$ 6,459,000	$ (865,000)	115
Union Pacific Lines		3,853,000	5,769,000	(1,916,000)	150
Camas Prairie Lines		20,529,000	19,295,000	1,234,000	94
Total Study Area		$29,976,000	$31,523,000	$(1,514,000)	105
Existing Base System Line Segments					
BN	Marshall-Moscow	$ 1,617,000	$ 2,817,000	$(1,200,000)	174
BN WI&M	Palouse-Bovill	3,977,000	3,642,000[a]	335,000[a]	92
BN WI&M	Marshall-Palouse-Bovill	5,353,000	5,895,000[a]	(542,000)[a]	110
UP	Tekoa, Pleasant Valley, Colfax Bridge	3,853,000	5,769,000	(1,916,000)	150
CSP	Revling-Orofino-Lewiston and Kooskia-Orofino-Lewiston	16,442,000	14,523,000	1,919,000	88
CSP	Spalding-Grangeville	4,087,000	4,772,000	(685,000)	117
Restructured Alternates					
(1) UP	Hooper Junction-Winona-Willada/Endicott	$ 1,039,000	$ 1,468,000[b]	$ (429,000)[b]	141
(2) BN	Marshall-Oakesdale	1,031,000	1,426,000	(395,000)	138
(3) BN	Marshall Plaza	367,000	607,000	(240,000)	165
(4) UP	Tekoa-Oakesdale	545,000	676,000[c]	(131,000)[c]	124
(5) BN&UP	Tekoa-Willson/Princeton	5,011,000	4,923,000[d]	88,000[d]	98
(6) BN	Bovill-Lewiston	9,821,000	9,253,000[e]	568,000[e]	94
(7) BN	Oakesdale-Palouse	869,000	1,054,000	(185,000)	121

[a] Does not include R.O.I. on rehabilitation costs necessary to retain service. The annual R.O.I. on rehabilitation costs are estimated to be $618,400 which would result in an operating loss of $283,000 for Palouse-Bovill and $1,483,000 for the BN WI&M Marshall-Palouse-Bovill option.

[b] Does not include R.O.I. on rehabilitation costs necessary to retain service, which are estimated to be $170,000 per year, leaving a loss of $599,000.

[c] Does not include R.O.I. on rehabilitation costs necessary to retain service, which are estimated to be $148,000 per year, leaving a loss of $279,000.

[d] Does not include R.O.I. on rehabilitation costs necessary to retain service, which are estimated to be $189,000 per year, leaving a loss of $101,000.

[e] Includes R.O.I. on rehabilitation cost necessary to retain service.

BN MARSHALL-MOSCOW BRANCH

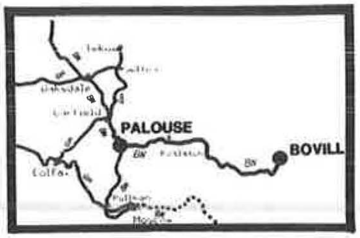

BN WI&M BRANCH: PALOUSE-BOVILL

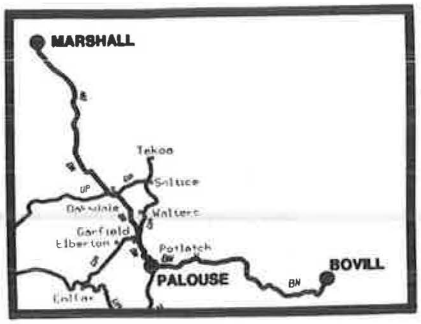

BN WI&M BRANCH and MARSHALL-PALOUSE BRANCH

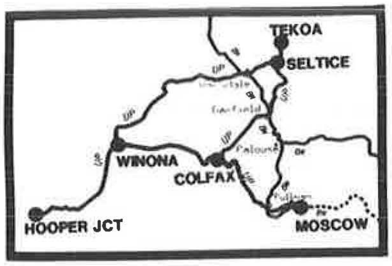

UP TEKOA , PLEASANT VALLEY, COLFAX BRANCHES

CAMAS PRAIRIE (CSP)
REVLING-OROFINO-LEWISTON-and KOOSKIA-OROFINO-LEWISTON

CAMAS PRAIRIE (CSP)
SPAULDING to GRANGEVILLE BRANCH

LEGEND
● ANALYZED SEGMENT
OTHER LINES IN REPORT
▪▪▪▪▪▪ ABANDONED LINE

FIGURE 3 Route map: existing base system line segments.

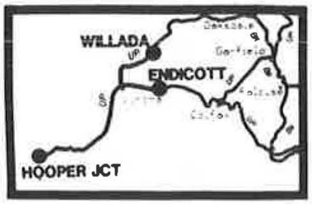

HOOPER JUNCTION to WILLADA and ENDICOTT

BN MARSHALL-OAKESDALE

BN MARSHALL-PLAZA

TEKOA-OAKESDALE

LEGEND
● ANALYZED SEGMENT
OTHER LINES IN REPORT
▪▪▪▪▪▪ ABANDONED LINE

TEKOA-WILLSON and PALOUSE-PRINCETON

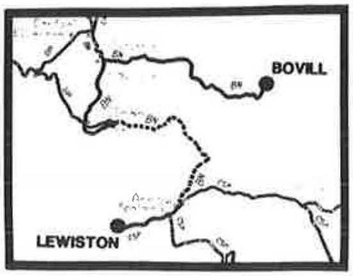

BOVILL-LEWISTON

BN OAKESDALE - PALOUSE

FIGURE 4 Route map: restructured alternatives.

TABLE 4 EFFECT OF PUBLIC OWNERSHIP OF LINES ON OPERATING DEFICITS

Option	Operating Loss (Current Ownership	10% Savings in Train Operating Expense	R.O.V. & Prop. Taxes	30% Savings in Normalized M/W&S	Revised Operating Surplus/ (Loss)
1 UP Hooper-Willada/ Endicott	$(429,000)	$22,000	$192,000	$105,000	$(110,000)
2 BN Marshall-Oakesdale	(395,000)	12,000	276,000	95,000	(12,000)
3 BN Marshall-Plaza	(240,000)	5,000	155,000	53,000	(27,000)
4 UP Tekoa-Oakesdale	(131,000)	7,000	86,000	40,000	2,000
5 BN Oakesdale-Palouse	(185,000)	10,000	113,000	59,000	(3,000)

more rail dependent and, therefore, less likely to select another transportation mode if rates increase moderately.

Private Short-Line Operation

This alternative would involve the purchase of lines by a private individual or firm. Short lines usually have the advantages of a lower wage structure and more flexible work rules, which decrease both operating and maintenance costs. These and other cost saving factors, plus a greater ability to generate new traffic through tailored personal service to shippers, have allowed a growing number of short lines to successfully operate lines that were not profitable for the major railroads. Much of the area's rail mileage and traffic must be examined in greater depth on a line-by-line basis to determine whether a short-line operation under private ownership could survive economically.

Nationwide, 173 short lines have begun operation since 1980 (about half are 25 mi or less in length). Examples of private short-line operations in or near the study area are the St. Maries River Railroad (STMA) in Idaho and the Washington Central Railroad Company (WCRC). The STMA was formed in 1980 as a subsidiary of the Potlatch Corporation, purchased 71 mi of railroad being abandoned by the Milwaukee Road, and now operates as a common carrier. The purchase and subsequent rehabilitative work have ensured continued service, which is vital to Potlatch's logging and mill operations as well as to other shippers on the line. The WCRC began operations over its main and branch lines between Pasco and Cle Elum in 1986 and in 1987 added operation of the Connell to Moses Lake branch. At present, WCRC lines total approximately 300 mi and carry fruit, vegetables, grain, and other commodities.

Public Agency Ownership or Participation

Some short-line railroads operate under public ownership and have additional advantages. Such lines are not subject to state and property taxes and, most important, do not require a profit or a return on salvage value. These financial considerations often enable publicly owned rail lines to operate where private ownership is no longer economical.

To illustrate the impact of public ownership on finances, the five restructuring options resulting in operating losses (Table 3) were recomputed and the results are shown in Table 4. Adjustments made in these analyses include a 10 percent reduction in train operating expenses; removal of the return on value (ROV), which is the liquidation purchase value of track and land; removal of property taxes; and a 30 percent reduction in the normalized maintenance of way and structures expense (MW&S). These items are some of the savings that might be expected under public short-line operation. These financial reductions bring the deficits down to levels that could be offset by some minor revenue increases such as emergence of new shippers, a return to rail use by existing industries now using other modes, rate surcharges, or other operating efficiencies. This modification of the major carrier estimates gives some insight into what could be expected from public short-line operations, but more precise analyses should be made if specific operations are contemplated.

Washington State law permits public ownership of railroads, but Idaho law makes no provision for this. Washington statutes allow for the formation of county rail districts (RCW 36.60) and ownership and operation of a railroad. The same allowances are extended to port districts (RCW 53).

Two examples of public agency ownership or participation in Washington State are the 61-mi Pend Oreille Valley Railroad between Newport and Metaline Falls and the 25.6-mi Royal Slope Railroad between Othello and Royal City. Both lines were being abandoned by the Milwaukee Road. The former was purchased by the Pend Oreille Port District, which was established by voter approval in 1978 when it became apparent that there was no other realistic alternative for continuing rail service. The port was formed, and it acquired, rehabilitated, and now operates the railroad. The Othello–Royal City operation was added to the Port of Royal Slope activities in 1982 to provide essential transportation for a variety of agricultural commodities. The BN operated the service under an agreement with the port, and the Washington Central Railroad has recently replaced BN.

Financial Assistance

Limited federal and state financial assistance is available to railroads in both Washington and Idaho. Federal assistance is available through the Local Rail Service Assistance (LRSA) program, which was established by Congress in 1976 but is scheduled to expire in 1988. These funds are available on a $^{70}/_{30}$ percent federal/local sponsor matching basis as documented in Rail Plan Updates in both states, and can be used for rehabilitation, acquisition, new construction, or substitute service. The use of available public funds would have a beneficial impact on all of the alternatives investigated.

In Washington State, assistance is also available to publicly owned railroads through RCW 47.76, the state's Essential Rail Assistance Account (ERAA). These funds are provided on a matching basis, with the state providing 80 percent and the local sponsor 20 percent. Although the 1983 legislature authorized this activity, the program has yet to be funded.

CONCLUSIONS AND RECOMMENDATIONS

This study was not expanded to project expected operating results under short-line operations. The scope of the investigation was to provide a timely snapshot that would provide interested parties with information to assist in future transportation planning, disclose any existing problems or successes, and reflect the probable time constraints for action. The estimated operating surpluses or losses under current ownership for the rail lines studied are summarized in Table 3. These figures reveal ratios of expenses to revenues considerably over 100 for the majority of the existing lines and the restructured options, using BN or UP average costs. The implication is that major carrier operation of the existing system or a restructured system is unprofitable and most lines will, in the long term, become candidates for abandonment.

In the analysis, the lines performing most favorably were those operating in Idaho and carrying forest and related wood products. Wood products receive a longer haul and can command a higher rate. This indicates that the major problem for lines in the study area may be lack of revenues as a result of the low rate structure that is forced by competitive pressures. Without doubt, higher rates and, to some extent, increased rail traffic would cause an important improvement in the rail service outlook for the area studied in Washington and Idaho.

In summary, rail service under current ownership in the Palouse region is in jeopardy. A goal of this study was to identify and evaluate alternatives that would retain as much of the essential rail service in the region as possible. No simple solutions such as system rationalization or restructuring were found adequate. The study reveals that the future of the existing rail system appears dubious, and immediate attention and community action are required to preserve a minimum core of essential and viable lines in the area.

Short-line operations and possibly public assistance may have a positive influence on the economics of the region's rail service. However, this should be reviewed on a case-specific basis, and there must be local interest and financial support before either consideration is implemented. If the demand for future rail service exists, a strategic planning and management process must be undertaken in a cooperative participatory framework that includes the state departments of transportation, local agencies, communities, and affected rail service users. The following recommendations should facilitate the initiation of this process:

- Identify and form a coalition of local shippers, communities, elected officials, government representatives, and others interested in retaining rail service. This group would consider the feasibility of rail service alternatives where sufficient local interest, support, and financial commitment exist or can be generated. Implementation of a specific type of operation and configuration of lines could then successfully occur.
- Continue efforts to concentrate and develop traffic to reduce costs and increase revenues.
- Monitor rail line sales and abandonment plans that may affect the Palouse region.
- Identify road and highway impacts resulting from rail abandonments, including the costs to and impacts on shippers and state and local governments. The Washington Transportation Research Center (TRAC) is currently studying these road impacts in Washington State and the results will be available in late 1988.
- Review legislative actions at both the state and federal level that may assist in rail transportation retention and support them accordingly.

APPENDIX: Methodology for Estimating System Revenues and Costs

The methods used to make the cost and revenue estimates are outlined in this appendix. Although use of certain system average costs was necessary, an attempt was made to quantify costs of the specific operation or operations being evaluated to the extent possible. Existing carrier costs were always used.

SYSTEM SEGMENTATION

The study area rail system was segmented into links and nodes. The nodes were represented by stations, and the links were the trackage connecting the stations. Revenues and costs of cars and switching were attributed to each station on the basis of the traffic generated, and track maintenance, line-haul operation, and ownership costs were assigned to each link. The first group of expenses is variable with traffic variations whereas the second group is variable with distance between stations.

REVENUE

Revenues were estimated for each station, by branch line, and by entire railroad company system on the basis of carrier traffic, waybill samples, shipper interviews, and published freight rates for 1984–1985.

COST COMPONENTS

Costs comprised both on- and off-branch elements. Off-branch variable costs were computed using 1983 Rail Form A costs for the carriers involved, updated to 1986 levels using the Association of American Railroads (AAR) Railroad Cost Recovery Index. Off-branch costs were computed from the junction of study system lines with connecting main tracks as appropriate for the options being investigated. They cover the balance of the carrier's haul to or from, or both, the off-branch destination, origin, or interchange point. In the case of the BN, this was from Marshall to the BN origin/destination or interchange junction with another railroad. For the UP, the off-branch haul was generally Hooper Junction to the UP origin/destination or interchange junction with another railroad. For the CSP, Lewiston was the junction from which the branch move was calculated, and all off-branch movement beyond Lewiston was considered either BN or UP depending on which parent carrier's traffic was involved.

On-branch costs, for the most part, were computed according to Interstate Commerce Commission (ICC) procedures as defined in 49 CFR Part 1152. On-branch cost elements cover train operations over the study line segments, as well as maintenance and ownership costs. More specifically, on-branch costs include

- Maintenance of way and structures (normalized);
- Maintenance of equipment;
- Transportation;
- Deadheading, taxi, and hotel;
- Freight car costs;
- Return on investment in locomotives; and
- Property taxes.

In addition to these prescribed on-branch elements, an on-branch opportunity cost element or return on salvage value invested (at 14 percent) is also considered. This was an average current rate that would be expected by an investor purchasing the line. (The ICC is now allowing 16.25 percent.)

With the exception of maintenance of way and structures, property taxes, and return on value, the cost elements are largely a function of the level of service required to handle the traffic volume generated by the study lines.

On-branch track expenses were also estimated for the analysis by using accepted ICC and industry methods. The major items included are discussed in the following subsections.

Normalized Maintenance

Maintenance of way and expenses associated with structures were estimated on a "normalized" basis or the average annual expenditure required to keep the track at a desired level of operation specified by the carrier. This is the average expenditure required to prevent deferring maintenance, which results in the downgrading of track safety classification. The characteristics (rail weights, curvature, gradients, road crossings, bridges, tonnage, etc.) of each segment of the system were considered in preparing the expense estimates. Estimates include annual expenses for such items as spot maintenance, track inspection, weed control, and snow removal, plus an allowance for those items that are worked on a longer cyclic basis. This longer cyclic work includes such items as cross tie renewals, surfacing and lining, road crossing repair, ditching, and bridge maintenance (sometimes referred to as programmed work).

The estimated average annual normalized maintenance expense for the study track segments, after rehabilitation, is estimated to range between $7,465 and $16,300 per mile.

Net Liquidation Value

The net liquidation value (NLV) or salvage value of the line segments is the value of all property and assets less the cost of removal and sale. The real estate value was generally assumed to average $7,525 per mile of right-of-way. The value of track materials was determined by using unit values obtained from various industry sources, from experience with similar work, and from scrap prices effective September 1986.

Rehabilitation

The rehabilitation cost required to upgrade track for continued future operation was calculated for three lines: the abandoned Moscow-Arrow branch; the Palouse-Bovill line (W&IM) because of its current 12-mph speed limitation; and the portions of the Pleasant Valley Branch in Option 1, between Winona and Willada, and Option 4, between Oakesdale and Seltice, because of lightweight rail. Because this would require an additional capital investment, an additional expense item of interest at 14 percent as return on investment was added to the operating expenses for these three lines.

Publication of this paper sponsored by Committee on State Role in Rail Transport.

Michigan Intercity Rail Passenger Study and Intercity Bus User Comparison

ROBERT L. KUEHNE AND KATHY A. HUNDT

User travel patterns, socioeconomic characteristics, and service ratings of Michigan's intercity rail service in 1985 are compared with those of earlier years and with those of Michigan intercity bus users. More than 2,300 usable rail passenger survey responses, a 90 percent sample, are the basis for 1985 rail passenger data. The highest percentage of rail passenger trips (41.5 percent) is taken to visit friends and relatives. This figure is similar for previous rail users and intercity bus users. The percentage of female rail passengers remains about the same (63.3 percent); the percentage of female intercity bus users has decreased to 53.5 percent. Rail passengers' median family income is nearly twice that of intercity bus users. Bus users rate intercity bus service higher than rail passengers rate intercity rail service. Several interrelationships of intercity rail and bus service, such as market area, trip diversion, and interconnecting service, have been examined. For instance, the diversion from intercity bus to rail is 10 to 15 percent. Applications to date include demand estimation, new station potential analysis, service improvement analysis, market targeting, and service evaluation.

A myriad of issues confronts rail passenger service in Michigan and the nation (*1*). The uncertainty of federal funding threatens the continued provision of rail passenger service (Michigan Passenger Service Aide survey conducted July 1977). Some changes in Michigan service in the 1980s warrant continued monitoring, for example, the reduced weekday service between Detroit and Chicago (TOL-DET-CHI) (Michigan Passenger Foundation passenger survey, June 1980). Increasing interest in high-speed rail service in Michigan and the Midwest warrants an improved and current data base to help determine the potential of this idea (2). Changing ridership patterns need an in-depth analysis: the International train (TOR-PTH-CHI) has been attracting record numbers of riders during the past year; Pere Marquette (GRR-CHI) ridership has been a disappointment after a promising start (*3*). The turmoil induced by deregulation of the airline (1978) and intercity bus (1982) industries suggests the need to accurately assess the role of rail passenger service both now and in the future (Amtrak nationwide user survey, February 1979). Maintenance of a good data base with 5-year interval time series data dictated undertaking a survey in 1985 to complement surveys done in 1980, 1977, and 1975.

In recent years some specific questions have been raised about intercity rail passenger service in Michigan:

- How do rail passengers view the location and quality of rail passenger terminals in Michigan?
- Why do so many board at Dearborn and relatively few at Michigan Central Depot in Detroit?
- What should be the focus of a promotional program to encourage use of rail passenger service in Michigan?
- Does intercity rail passenger service really divert passengers from intercity bus service? If so, to what degree?
- How important are interconnecting services? How many rail passengers actually travel to and from rail passenger terminals by intercity bus and local public transportation? How many would if service were better?
- What is the importance of being able to go to Chicago or Detroit, conduct business, and return on the same day? How many shopping or business trips are made with this in mind?

PREVIOUS STUDIES

Three studies of Michigan's intercity rail passenger system were conducted in the 1970s and 1980s. The first, a user survey conducted by the Bureau of Urban and Public Transportation (UPTRAN) in July 1975, is the only other study done by the Michigan Department of Transportation (MDOT) (*1*). Other surveys were undertaken by Michigan Passenger Service Aide in 1977 and the Michigan Passenger Foundation in 1980. The most comprehensive of these was the 1975 study.

STUDY AREA CHARACTERISTICS

Michigan had a 1985 population of approximately 9.1 million, an employment base of 3.9 million, and a college enrollment of some one-quarter million. Most of these people are located in the southern half of Michigan's lower peninsula, which contains 39 of Michigan's 83 counties and all 15 urbanized areas. This is the area served by rail passenger service.

Michigan's population is concentrated in the southeastern part of the state where Detroit is located. More than 3.9 million people, 42 percent of the state's population, are found in Detroit and its environs (Wayne, Oakland, and Macomb counties). An additional 40 percent is in the remainder of the southern half of the Lower Peninsula.

Most employment in Michigan is with the nearly 1,600 employers with more than 250 employees. A high percentage of these are located in the southern half of the Lower Peninsula; many are in communities served by rail passenger service.

Bureau of Transportation Planning, Michigan Department of Transportation, P.O. Box 30050, Lansing, Mich. 48909.

Some 90 percent of Michigan's 4-year college students attend schools located in the southern half of the Lower Peninsula. Most of these attend the 35 of 38 Michigan universities and colleges with 1,000 or more students located in this part of the state.

RAIL PASSENGER SERVICE

The rail passenger system that existed at the time of the 1985 survey consisted of 626 route-miles, 540 in Michigan, and served 19 Michigan communities (Figure 1). The highest level

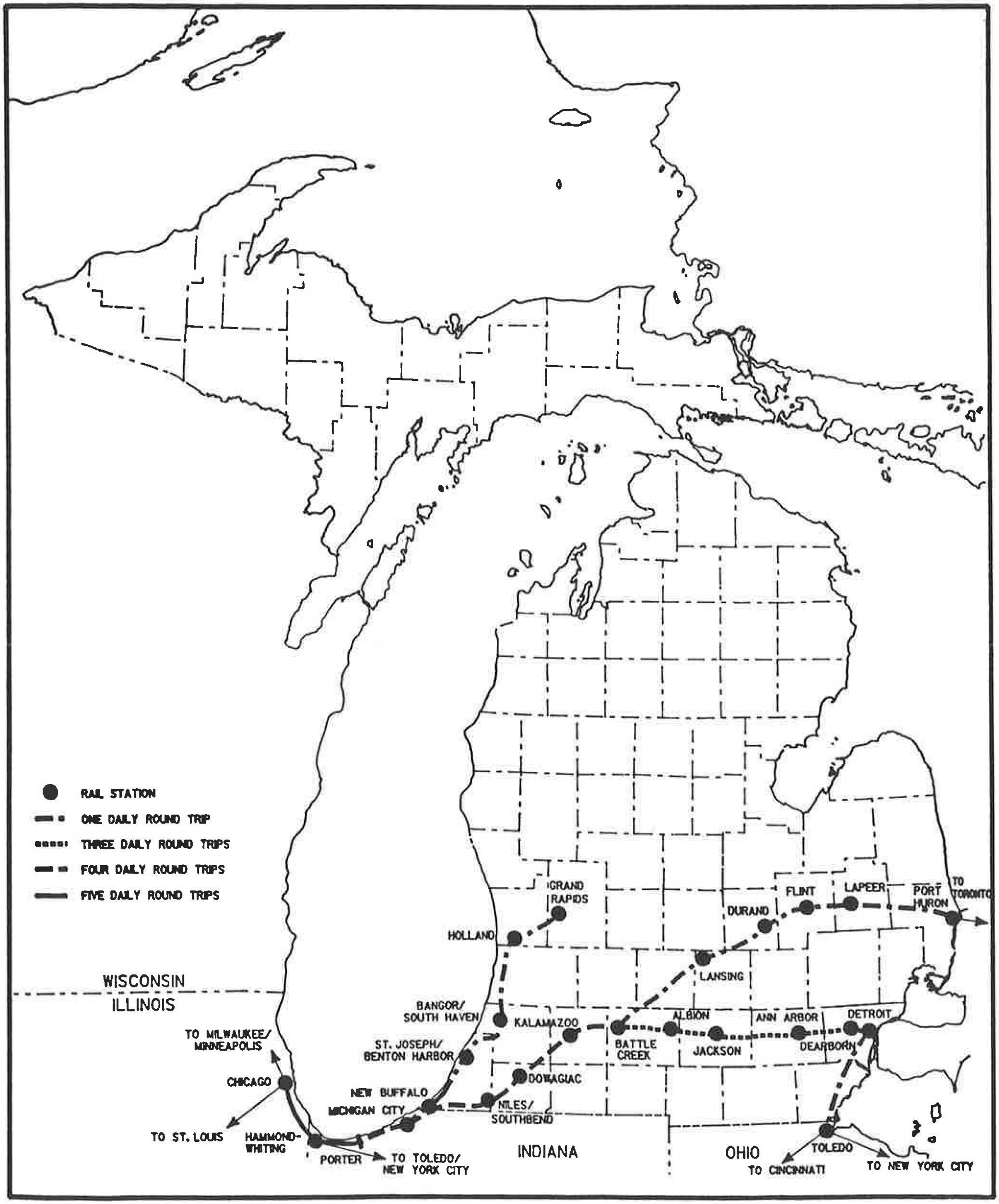

FIGURE 1 Intercity rail passenger system.

of service, three daily round trips at the time of the survey, was provided between Detroit and Chicago. One of these round trips continued beyond Detroit to Toledo, where connections are made with overnight train service to and from points throughout the northeastern United States.

Several changes have occurred in Michigan's rail passenger system since the 1975 survey was conducted. Intercity rail passenger route mileage and communities served have increased, primarily because of the addition of the Grand Rapids to Chicago train in August 1984. Other changes include adjustment of the schedule for the TOR-PTH-CHI service to accommodate traveling to Toronto and addition of a round trip between Detroit and Chicago.

RAIL PASSENGER TRAVEL

Intercity rail passenger ridership increased by approximately 24 percent between 1975 and 1985:

Route	*1975*	*1985*	*Change (%)*
Grand Rapids–Chicago		60,595	
Toronto–Port Huron–Chicago	86,953	118,506	36.3
Toledo-Detroit-Chicago	349,982	386,257	10.4
Total	436,935	565,358	24.4

During this period bus use declined; air transportation and automobile use increased. Rail trip making continues to be oriented toward Chicago and intercity bus toward Detroit. Detroit and Chicago are the highest generators of intercity trips made in Michigan.

On weekends the three services combined carry more than twice the number of rail passengers they carry on weekdays. The TOL-DET-CHI service has the greatest differential between weekday and weekend trips. The TOL-DET-CHI service carries 70 percent of the total ridership, TOR-PTH-CHI 19 percent, and GRR-CHI 11 percent. Friday is the heaviest day of travel, with nearly three times the ridership that occurs in the middle of the week.

The greatest concentration of users resides and begins or ends trips in the Detroit, Michigan, and the Chicago, Illinois, areas. Michigan counties that have a train station generally have the second greatest number of users. Nationwide, Michigan and its neighboring states have the largest concentration of users. However, states as far away as California and Florida were represented in the survey data, with between 10 and 49 user residences located in these two states.

TRAVEL CHARACTERISTICS

Number of Trips Using Amtrak in Past 12 Months

More than one-third (35.8 percent) of the respondents had made one or two additional trips in the previous 12 months. Approximately 10 percent made more than 11 trips; 21.4 percent had not made any trips (Table 1). The intercity bus user survey found 29.3 percent of the respondents had made one or two additional bus trips in the last 12 months; 16.8 percent had made more than 11 trips (2).

Expected Trips Using Amtrak in Next 12 Months

More than one-quarter (28.8 percent) of those responding planned to make one or two trips in the upcoming year. This was followed closely by 26.7 percent who planned to make no

TABLE 1 TRAVEL CHARACTERISTICS COMPARISON, 1985

Item	Bus %	Rail %
Station Access/Egress Mode		
Walk	12.2	7.2
Auto	60.3	64.8
Local Transit	10.1	3.0
Taxi	10.5	17.9
Intercity Bus	3.9	1.1
Intercity Rail	0.6	0.9
Trip Purpose		
Work/Business	10.4	14.4
Shopping	0.9	8.4
Personal Business	25.9	8.2
Vacation/Other Social-Recreational	14.2	22.6
Visit Family/Friends	43.9	41.5
Traveling Alone	80.3	52.2
First Time Users	18.4	21.4
Option If Service Were Discontinued		
Air	16.5	26.4
Auto	49.3	50.0
Bus/Rail	15.6	11.6
Not Take Trip	15.6	7.9

Source: MDOT, Bureau of Transportation Planning, Passenger Transportation Planning Section, Surface Systems Unit.

trips. Approximately 12 percent planned to make 11 or more trips (*3*).

Marketing of Intercity Rail Passenger Services

More than one-half (54.5 percent) of all respondents learned of the train service from friends or relatives. A single "traditional" advertising source was responsible for a substantial number of riders in only one case. Special newspaper promotions for the GRR-CHI service undoubtedly contributed to attracting nearly one-third (32.3 percent) of the respondents. Earlier surveys also found friends and relatives to be the major source of information about train service; 46.5 percent in 1979 (*5*) and 53.5 percent in 1980 (Michigan Passenger Foundation passenger survey, June 1980).

How Ticket Was Obtained

The majority (69.4 percent) of respondents, for the rail system as a whole, purchased their tickets from an Amtrak ticket agent. For the GRR-CHI service, 45.9 percent of the respondents obtained their tickets through a travel agent. There is no ticket agent at the Grand Rapids station. Therefore even those who answered "ticket agent" probably bought their tickets from the train conductor at the station.

Travel Time to and from Station

Nearly two-thirds (64.9 percent) of those responding traveled less than 30 min to reach the train station. More than half (59.0 percent) of these traveled less than 15 min. Nearly two-thirds (61.5 percent) of the respondents traveled less than 30 min to reach their final destination. Of these, 54.8 percent had travel times of 15 to 29 min.

Access to and from Train Station by Automobile

Seven of 10 passengers used the automobile to access the train station; nearly 6 of 10 reached their final destination by automobile (Table 1 and Figures 2 and 3). The 1985 intercity bus user survey also found the automobile to be the most popular method of accessing the station. Nearly two-thirds (63.7 percent) of the bus users reached the bus terminal by driving or as passengers in an automobile. Earlier rail studies also indicated that the automobile was the primary means of transportation to the rail terminal. In each case, at least 60 percent of the respondents used an automobile to access the station.

Access to and from Train Station by Taxi

Taxi service is the second most important mode of transportation, particularly from the train station to the final destination. Overall, 11 percent of the respondents arrived at the train station in a taxi; nearly one-quarter (24.8 percent) used a taxi to reach their final destination. The 1985 intercity bus user survey found the percentage of passengers using taxis and walking to and from terminals to be nearly equal. Other studies found the percentage of users accessing train stations by taxi to be similar to that found by the 1985 study. These ranged from 10.6 percent in 1980 to 16.5 percent in 1977.

Access to and from Train Station by Walking

There are a small, but significant, number of passengers who walk to the train station and from the station to their final destination. Depending on the train route and trip end, from 3 to 14 percent of the passengers walk either to the terminal or from there to their final destination. Overall percentages of users who walked to and from intercity bus terminals were

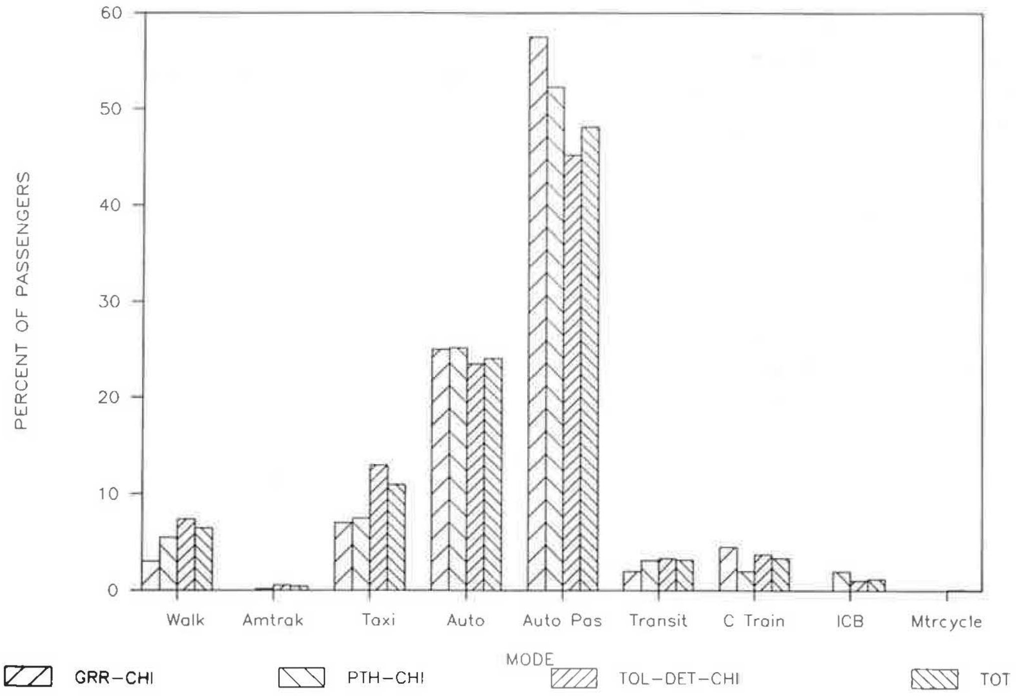

FIGURE 2 Access to train station, 1985.

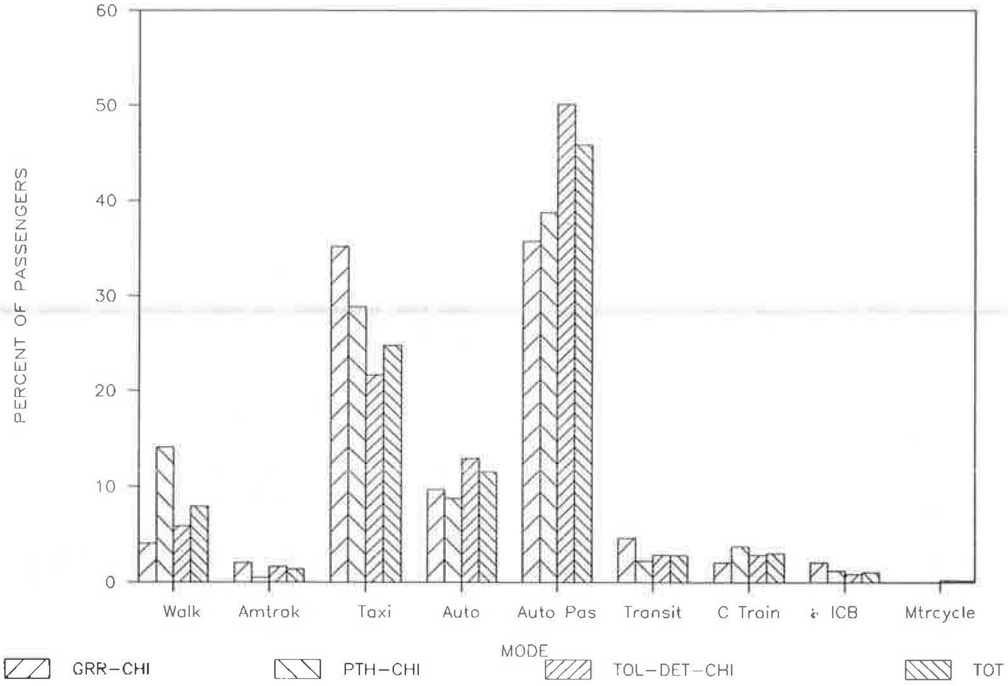

FIGURE 3 Access to destination, 1985.

somewhat higher. Results of the 1985 intercity bus survey indicated that slightly more than 1 of 10 (10.5 percent) passengers walked to the bus station; 13.8 percent walked from the station to their final destination.

Interconnecting Public Transportation Services

Some 8 percent of rail passengers use connecting public transportation services to access Michigan rail terminals or to reach their destination after using intercity rail. One-third of this use is associated with intercity bus and rail passenger services; two-thirds are associated with local bus or rail transit.

The 1985 intercity bus survey revealed that some 30 percent of intercity bus passengers used public transportation to access intercity bus services or destinations after using intercity bus services. This is nearly four times the percentage of rail passenger users. The intercity/local split of the 30 percent, however, was about the same as that of intercity rail users: one-third intercity and two-thirds local transit.

Use of interconnecting services by Michigan rail service users has declined from about 20 percent in 1975 and 1977 to about 13 percent in 1980 to 8 percent in 1985. Much of this reduction occurred in the "connecting Amtrak" category, which decreased from 10 percent to 2 percent; intercity bus remained essentially unchanged at 1 percent. Current schedules often make connecting with other intercity modes difficult.

Trip Purpose: Visiting Family and Friends

A large portion (41.5 percent) of intercity rail passengers use the train service to visit family and friends (Table 1). This was by far the most common response to the question about trip purpose. Visiting family and friends combined with "vacation" (13.1 percent), "other social-recreational" (9.4 percent), and "shopping" (8.4 percent) account for well over two-thirds (72.4 percent) of the pleasure trips (Figure 4). The most common length of stay was 3 to 4 days. This supports the idea that many intercity rail passengers use the train for short pleasure trips. The 1985 intercity bus study also found visiting family and friends to be the primary trip purpose of intercity bus users. Previous rail studies of 1977 and 1980 had similar results.

Trip Purpose: Business or Work

Overall, 14.4 percent of intercity rail passengers are on some form of business or work trip (Table 1). The work trip was ranked second to visiting family and friends in only one case: 17.0 percent of the respondents on the TOL-DET-CHI route were on a business trip. Passengers on the GRR-CHI service ranked "shopping" as the second most popular trip purpose, and TOR-PTH-CHI riders chose "vacation" as number two.

The 1985 intercity bus survey found only 1 percent of all trips made to be business trips. The most popular purpose was to visit friends or relatives (43.9 percent), followed by personal business (35.3 percent) and vacation (11.1 percent).

Of the previous rail surveys conducted, only the 1979 nationwide Amtrak study found the largest group of users to be on business trips. One-third (33.6 percent) of the passengers were on a business or work trip, and 29.7 percent were visiting family or friends (Amtrak User Survey, February 1979). The 1985 Pennsylvania study found slightly more than one-half (52.3 percent) of the respondents using rail service for business or work trips (*4*). This high percentage occurs because service is primarily oriented toward commuter trips.

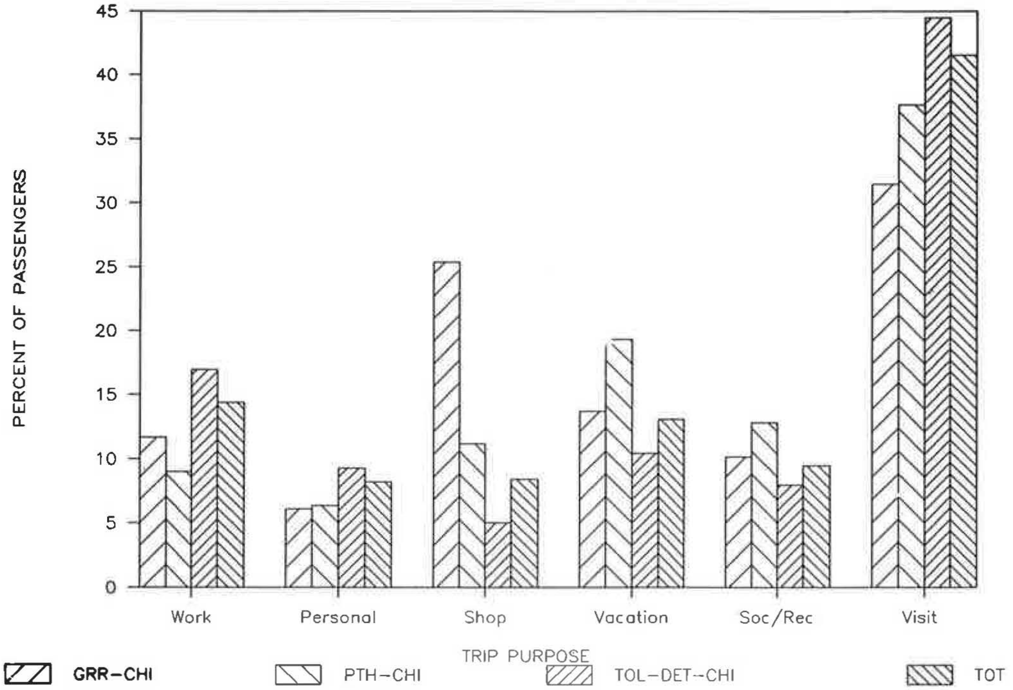

FIGURE 4 Trip purpose, 1985.

Length of Stay

The most common response to this question was "3 to 4 days" (43.9 percent). Only 0.1 percent of the respondents did not plan to stay even 1 day, and 16.9 percent were staying 5 days or longer (Figure 5).

Number of People in Party

More than one-half (52.1 percent) of those responding were traveling alone (Table 1). GRR-CHI was the only route that had a greater number of two-person parties (40.9 percent) than single-person parties (38.7 percent).

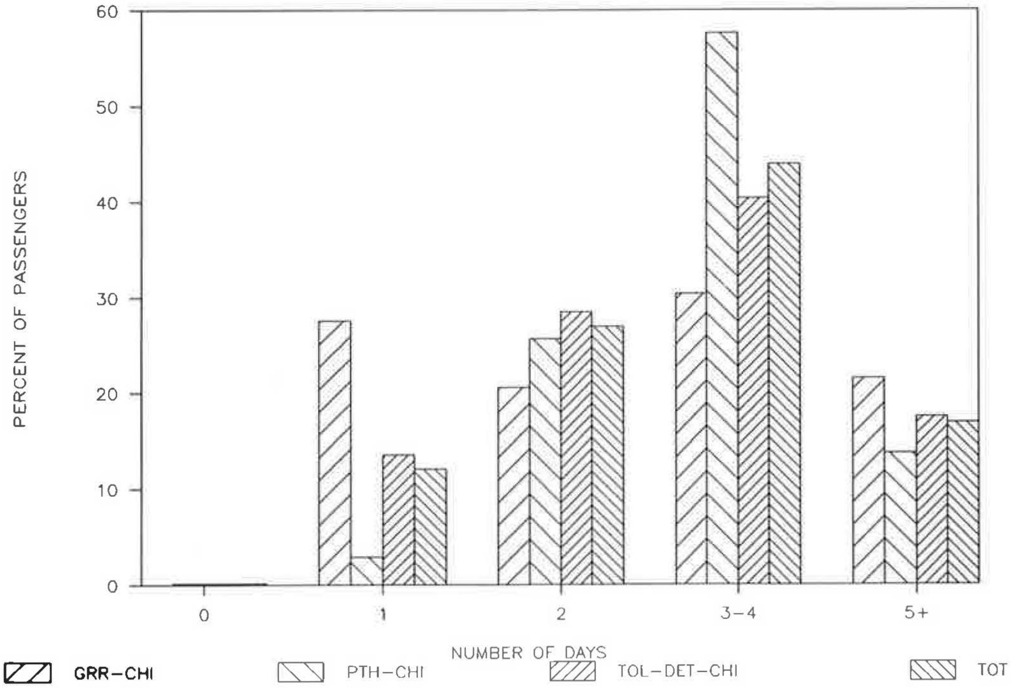

FIGURE 5 Length of stay, 1985.

Number in Party Under 12 Years of Age

The majority (87.5 percent) of respondents did not have any children under the age of 12 traveling with them.

Reason for Choosing Amtrak

Overall, the most popular reason for choosing Amtrak (Figure 6) was "to relax" (17.6 percent). This was followed by "to save money" (15.6 percent), "convenient schedule" (15.2 percent), and "convenient station location" (14.8 percent). The responses for TOR-PTH-CHI and TOL-DET-CHI were ranked in similar order. GRR-CHI responses were ranked as follows: "convenient schedule" (18.5 percent), "to relax" (17.6 percent), "convenient station location" (14.9 percent), and "comfort" (11.6 percent).

Option if Train Were Discontinued

One-half (50.0 percent) of those responding would use an automobile to make the trip if train service were discontinued (Table 1 and Figure 7). Commercial airline was the second highest choice (26.4 percent), and intercity bus was third (11.6 percent). Those responding to the intercity bus user survey chose the automobile as the most popular alternative if bus service were discontinued (36.5 percent); commercial airline was second (16.5 percent), and Amtrak and not taking the trip were tied for the third most popular alternative (15.6 percent).

Higher-Speed Service

Users prefer more frequent service to higher-speed trains (55 percent compared with 45 percent). The 1980 Michigan Passenger Foundation Survey revealed a similar preference: 57 percent preferred more frequent service and 43 percent preferred faster trains. User comments reflected a similar pattern. Approximately 7 percent of the responses to the question "What one thing would you like to change about the train service?" pertained to higher-speed rail service: reduce the number of stops (1.1 percent) and reduce travel time (5.6 percent). The percentages were notably higher in the TOL-DET-CHI corridor, 2.4 and 13.2 percent, respectively.

Weekday Versus Weekend Travel

The majority of intercity rail travel takes place on weekends. Nearly three-quarters (71.2 percent) of the weekly passenger volume during the survey period occurred on Friday and Saturday. Friday, Saturday, and Sunday are considered weekend days, and Monday through Thursday are considered weekdays. The typical weekend traveler was female, 18 to 24 years old, employed full time, and using intercity rail service to visit family or friends. The typical weekday traveler had the same characteristics with the exception of age group; the typical respondent was 25 to 34 years of age.

Frequent Versus Infrequent Users

Nearly three-quarters (74.2 percent) of the survey respondents were infrequent users; they had made fewer than five trips by rail in the past year. Characteristics of the typical frequent and infrequent user (trip purpose, employment status, and family income) were similar. Each was visiting family or friends, was employed full time, and had a family income in the $30,000 to $35,000 range.

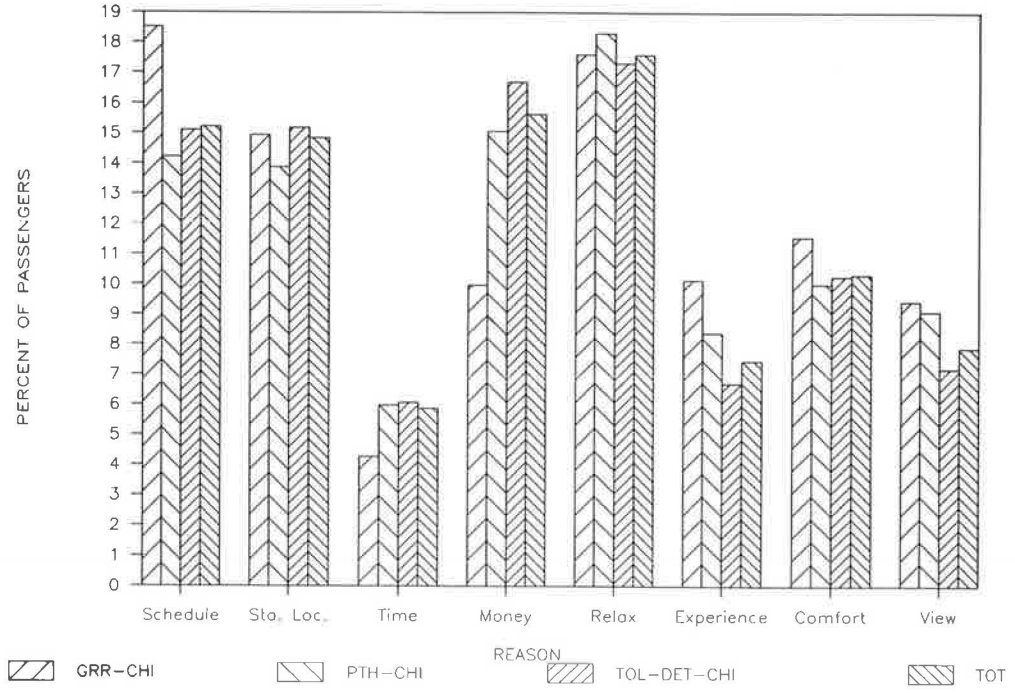

FIGURE 6 Reason for choosing Amtrak, 1985.

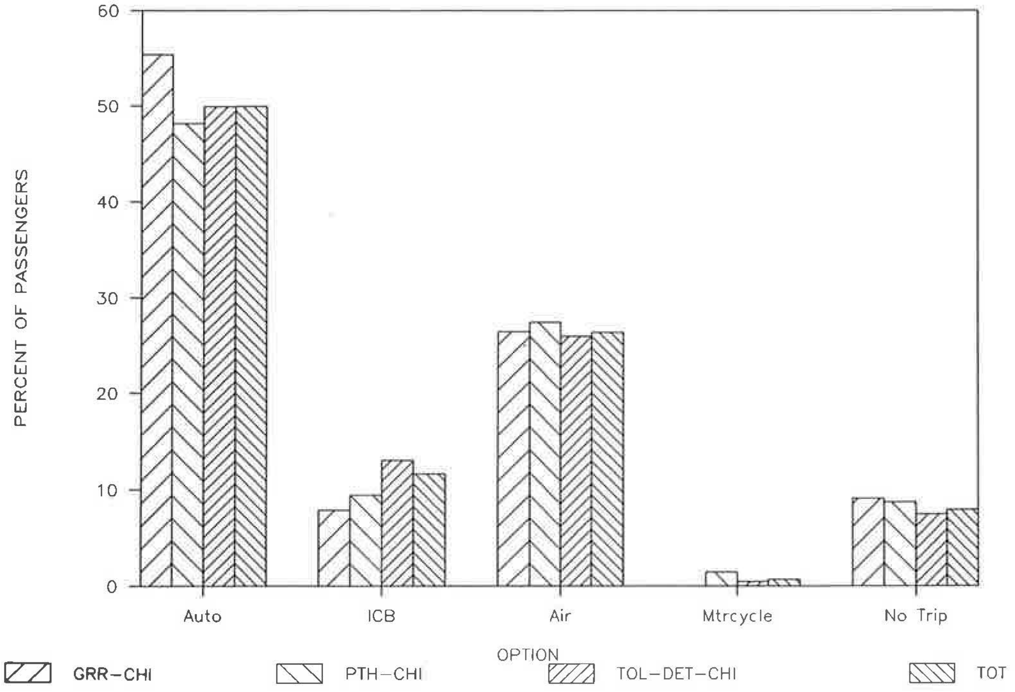

FIGURE 7 Option if train discontinued, 1985.

USER CHARACTERISTICS

Vehicles per Household

More than one-third of the users had two vehicles in their household; 15.2 percent had none. Of intercity bus users, 25.4 percent had two vehicles and 23.8 percent had none in their household.

Users' Employment Status

More than 5 of 10 users are employed, 2 of 10 are college students, and 1 of 10 is retired (Figure 8). The 52.3 percent employed figure is notably higher than the 42.6 percent intercity bus figure: for college students the figures are about the same (17.7 percent versus 17.4 percent); they differ more for retired users (10.2 percent versus 15.3 percent). The employed figures are nearly the same as those found by earlier rail passenger surveys: 52.3 percent in 1985, 57.5 percent in 1980 (Michigan Passenger Foundation passenger survey, June 1980), 50.0 percent in 1977 (Michigan Passenger Service Aide survey, July 1977), and 49.3 percent in 1975 (*1*). College student percentages are also similar. The number of retired users, however, has increased: 10.2 percent in 1985, 8.2 percent in 1980, 4.0 percent in 1977, and 7.2 percent in 1975.

Age

The largest age group for males and females alike is 18 to 24 (2.5 of 10 in this group), followed by the 25 to 34 age group (2 of 10 in this group); about 1 of 10 (8.9 percent) is 65 or older. The absence of any of Michigan's largest universities (10,000 or more enrollment) caused the GRR-CHI corridor percentages and median age to differ from those of the other two corridors.

The intercity bus user survey found that 3.5 of 10 users were in the 18 to 24 age group, and 1 of 10 was in the 65 and older age group. No comparison can be made with the 25 to 34 age group in Michigan, although in other states the rates are between 1 of 10 and 2 of 10. The median age of the intercity bus user is 33. The 18 to 24 age group remained about the same as it had been in earlier rail passenger surveys; the 25 to 34 group decreased by about 5 percent, and the 65 and older group increased by the same amount. Median age has increased steadily: 28.7 years (1975), 30.9 years (1977), 31.1 years (1980), and 32.4 years (1985).

Sex

Nearly two-thirds (63.3 percent) of the respondents were female. This differs from the findings of the intercity bus user survey that indicated that only 53.5 percent of the respondents were female.

Family Income

One of 10 rail passengers has a family income less than $10,000, 4 of 10 have less than $30,000, and nearly 3 of 10 have more than $50,000 (Figure 9). There is some variance among the three corridors as reflected by the median income difference: about $3,000 from one corridor to the next with TOL-DET-CHI the lowest and TOR-PTH-CHI the highest. The median family income of all rail users was $34,200.

Intercity bus services have 3.5 of 10 users with a family income of less than $10,000, less than 1 of 10 with more than $50,000, and a median family income of $18,100, about half that of the intercity rail passenger. Michigan's median income was approximately $28,000 in 1985. Rail passengers' median family income has approximately doubled since 1977; this

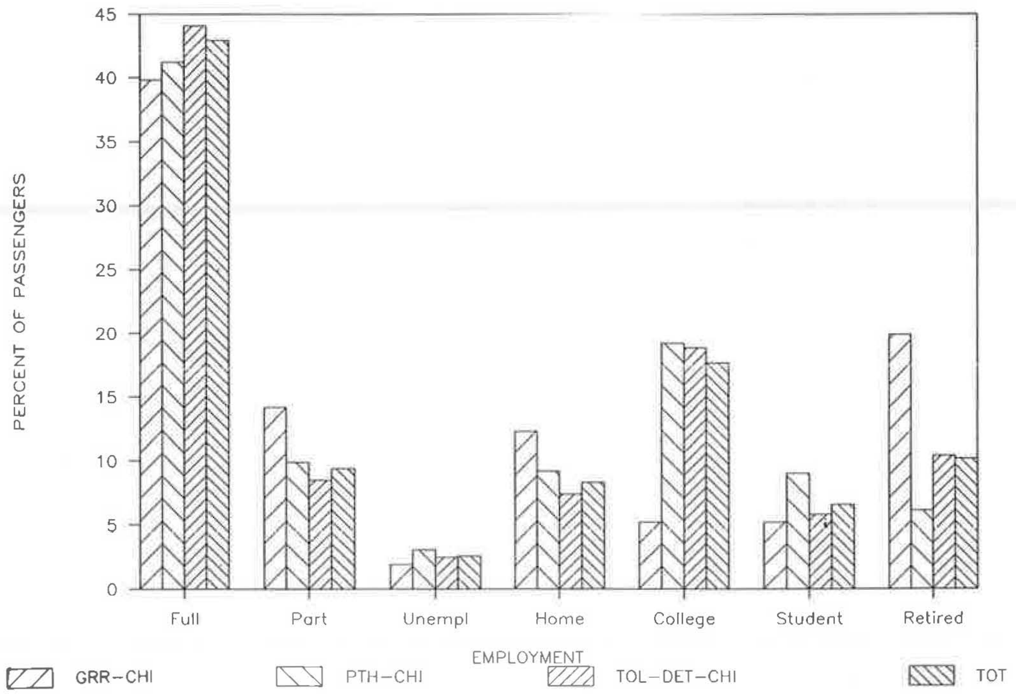

FIGURE 8 Employment status, 1985.

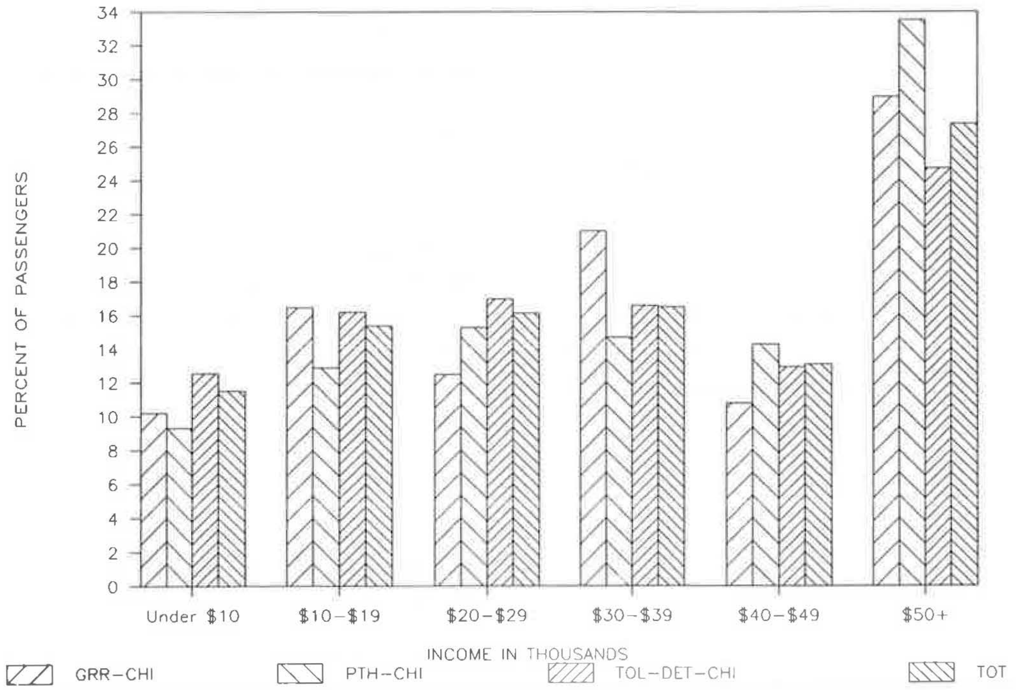

FIGURE 9 Passenger family income, 1985.

increase is somewhat greater than the increase for Michigan as a whole. At the same time, the median family income of intercity bus users in Michigan increased by less than 10 percent.

Typical User

The typical 1985 intercity rail passenger was female, approximately 31 years old, and from a household of 3.3 persons with 2.2 operating vehicles. She was employed full or part time and had a family income of approximately $34,200 (in 1985 dollars). The typical 1985 intercity bus user was female, approximately 33 years old, and from a household of 2.7 persons with 0.8 operating vehicles. She was employed full or part time and had a family income of approximately $18,100 (Table 2).

SERVICE RATING

Users were asked to rate rail passenger service for food and beverage quality, car comfort, car cleanliness, on-time arrival and departure, frequency of service, station condition, station parking, fares, courtesy of employees, and convenient arrival and departure times. A brief summary of the most frequent responses follows.

Food and Beverage Quality

This feature had the largest percentage of "don't know" responses (29.7 percent) of the 10 categories, which indicates that many people chose not to use the on-board food and beverage service. Of those familiar with this service, nearly 90 percent (89.8 percent) found it to be satisfactory or better.

Car Comfort

This feature received high ratings on all three routes with a combined total of 71.4 percent rating it good to excellent. GRR-CHI was rated highest; 83.3 percent of the respondents thought that comfort was good (51.3 percent) or excellent (32.0 percent).

Car Cleanliness

This feature received the second highest rating of the 10 categories; 79.3 percent of the respondents rated it good or excellent. GRR-CHI received the best rating with 82.4 percent responding good (44.7 percent) or excellent (37.7 percent). This is similar to the ratings for intercity bus service, for which 83.8 percent of the respondents considered the condition of the buses to be good or very good.

Coach Car Quality

The comfort and cleanliness of Amtrak coaches received high marks from rail passengers in Michigan. More than 95 percent of respondents on all three routes rated both car comfort and cleanliness as satisfactory or better; more than 70 percent rated them as excellent or good. Less than 5 percent rated these features as poor or unsatisfactory. Comments made on coach car quality constituted about 8.5 percent of all comments. These pertained to the need for cleaner trains, cleaner bathrooms, and improved seating. Because smoking and nonsmoking cars are provided, smoking was not thought to be a major problem on trains, but 6 percent of intercity bus service users considered smoking on buses a problem.

Dining Car Quality

The quality of food and beverages served on Amtrak trains received above average marks. Approximately 90 percent of respondents rated this feature satisfactory or better, and about half of those using dining car services rated them excellent or good. Comments made on food and beverage quality accounted for 4.9 percent of all responses made to the question "What one thing would you change?" The percentage of

TABLE 2 USER CHARACTERISTICS COMPARISON, 1985

Item	Bus %	Rail %	Michigan %
Household Size	2.7	3.3	2.8
Operating Vehicles/Household	0.8	2.2	1.7
Family Income ($000)	18.1	34.2	24.2
Female (%)	53.5	63.3	51.2
Age (median)	33.0	31.0	29.0
Employed Full Time (%)	29.2	42.9	42.7
Unemployed (%)	9.9	2.6	9.9
College Students (%)	17.4	17.7	5.6
Retirees (%)	15.3	10.2	10.9

Source: MDOT, Bureau of Transportation Planning, Passenger Transportation Planning Section, Surface Systems Unit.

comments was significantly higher for the GRR-CHI (14.2 percent) and TOR-PTH-CHI (8.0 percent) trains than for the TOL-DET-CHI trains (2.0 percent). (This feature did not apply to intercity bus service.) Food and beverage quality was also an important concern to Michigan rail passengers in 1980 (20.4 percent) (Michigan Passenger Foundation passenger survey, June 1980) and 1975 (9.1 percent) (*1*).

On-time Service

Nearly 15 percent of rail passengers consider on-time performance to be inadequate on the TOL-DET-CHI route. Only 58 percent considered it good or excellent. These figures contrast with the far more favorable on-time performance ratings of the GRR-CHI (85.5 percent excellent/good) and TOR-PTH-CHI (72.1 percent excellent/good) services. In addition, there were more than 50 comments indicating dissatisfaction with late TOL-DET-CHI trains.

Frequency of Service

Overall, approximately 14 percent of rail passengers consider service frequency insufficient. Service frequency was considered more of a problem by users of the TOR-PTH-CHI and TOL-DET-CHI services (rated poor/unsatisfactory by 14.9 percent and 14.2 percent, respectively) than by those using the GRR-CHI service (12.2 percent poor/unsatisfactory). This pattern was corroborated by the ratings of convenience; 10.5 percent of the users considered convenience to be poor/unsatisfactory. User remarks about service frequency constitute a similar percentage. Approximately 25 percent of all written comments pertained to service frequency: improve frequency of service (9.5 percent), change arrival and/or departure times (5.3 percent), and increase number of trains (10.1 percent).

Station Condition and Parking

The condition of rail passenger terminals and their parking areas received above-average marks from rail passengers. Approximately 90 percent of those rating these features considered them satisfactory or better. More than half rated them excellent or good. One aspect of these features that should be addressed, however, is parking at stations in the TOR-PTH-CHI and TOL-DET-CHI corridors where more than 15 percent considered them less than satisfactory. Written comments about terminals constituted 2.5 percent of all responses, and one-third of these pertained to the Detroit station. Convenience of station location, parking at the station, and station comfort and cleanliness were major concerns of rail passengers in 1980 (34.9 percent, 14.1 percent, and 18.7 percent, respectively) and to a lesser extent in 1977 (13 percent) and 1975 (4.9 percent).

Track Condition

There was relatively little user concern for track condition. Although the questionnaire did not include track condition in the list of features to be rated, nearly 2 percent of the users indicated it was the one thing they would like to change about the train service. An additional 1 percent made similar statements under "other comments." These referred to a noisy, swaying, bumpy, and uncomfortable ride.

Fare Structure

Most passengers are satisfied with the fare structure. More than 90 percent rated it as satisfactory or better, and more than half considered it excellent or good. This is corroborated by the second highest reason for choosing Amtrak—to save money. Only 8 percent of respondents rated fares as poor or unsatisfactory. Somewhat ironically, the only route that had an off-peak fare program in effect at the time of the survey, TOL-DET-CHI, received the poorest rating and had the highest percentage of fare comments (12.4 percent). In contrast, more than 30 percent of intercity bus users thought fares were too high. This difference in fare satisfaction is partly due to the higher income of rail passengers and the greater percentage of business trips made using rail passenger service.

Courtesy of Employees

Nearly 98 percent of the respondents considered employee courtesy satisfactory or better. Fully 100 percent of the GRR-CHI users rated this item as such. Intercity bus users were also satisfied with courtesy of employees. Nearly 85 percent (84.9 percent) rated this item good or very good. Although the service ratings indicate a high overall degree of satisfaction with employee courtesy, users' written comments give a different impression. Terminal ticketing agents and food service employees are thought to be discourteous by some of the passengers. Written responses to this item were primarily complaints and constituted slightly more than 1 percent of the user comments. This appears to make it a small problem (especially considering the high degree of satisfaction of a majority of passengers rating this item). Employee courtesy has a direct impact on passengers and their impression of intercity rail service and is an important consideration.

SELECTED RAIL/BUS INTERRELATIONSHIPS

Rail/Bus Market Area

The median access time for the large metropolitan area stations (Detroit and Chicago) is 29 min. For the smaller metropolitan areas of Michigan (such as Flint, Grand Rapids, and Lansing) and other communities (such as Albion and Niles) that have rail passenger stations the median access time is 20 min. The time it takes to reach destinations from the station after deboarding the train is somewhat greater than the access times: 32 min for large metropolitan areas and 23 min for smaller metropolitan areas and other communities.

There are no comparable access time data for intercity bus users. However, information on means of transportation to and from intercity bus stations is available. This could be used to indicate time-distance differences. For instance, the percentage of walking and local transit trips to intercity bus stations is more than double the percentage to intercity rail passenger stations. This suggests shorter trips to access intercity bus stations. Conversely, taxi trips are nearly 100 percent higher for intercity rail, which indicates a longer time-distance to access intercity rail passenger stations.

Rail/Bus Diversion

Approximately 12 percent of the respondents indicated that they would use intercity bus service if train service were discontinued. This ranks third as the predominant alternative to rail service with 1 of 2 passengers choosing automobile and 1 of 4 air travel. A somewhat higher percentage (15.6 percent) of intercity bus users indicated that they would use Amtrak should intercity bus service be discontinued. Twelve percent is approximately half the 23 percent figure obtained in the 1979 and 1980 rail surveys. More rail users choose the automobile and flying as alternatives today than previously. Another factor that affects diversion is the user profile. The intercity rail service user is significantly different from the intercity bus user. The typical 1985 intercity rail passenger had an average family income nearly twice that of the intercity bus passenger and came from a larger household with nearly three times more operating vehicles (Table 2).

Rail/Bus Interconnection

Approximately 1 percent of Michigan's intercity rail passengers use intercity bus service as their access or egress mode. The percentage of bus passengers using rail service for part of their trip is less (0.6 percent). This is not particularly surprising because Michigan's intercity bus and rail passenger schedules are not usually coordinated so that one can feed the other. Also, as mentioned before, the typical intercity rail and bus user profiles are significantly different. This contributes to, or may be the product of, the low transfer percentage.

Rail/Bus Users' Service Perspectives

Rail and bus users rated their respective services in terms of on-time performance, service frequency, vehicle condition, terminal condition, and employee courtesy. In every case, intercity bus users gave higher marks to their mode than did rail passengers. In addition, the "poor" percentage was lower for bus than rail in four of the five categories; employee courtesy was the exception (Table 3). The difference is greatest for frequency of service. This is understandable because two of Michigan's three rail passenger routes offer only one round trip daily. The second highest differential is for on-time performance. At the time of the rail survey, on-time rail performance was a problem for the Detroit-Chicago service and, to a lesser extent, for the International (TOR-PTH-CHI) service. The third-ranking category is terminal condition. Most rail passenger terminals are in good condition with the exception of Detroit's Michigan Central Depot; intercity bus terminal condition varies considerably. Another possible explanation for the difference is that rail users may have higher expectations because of their higher income and vehicle ownership levels.

Rail/Bus Trip Similarities and Differences

Aspects of rail and bus trips include station access and egress, trip purpose, size of traveling party, first-time travelers, and travel options (Table 1). Rail trips are preceded or followed more often by a taxi ride than are bus trips and less often by walking or trips on local transit. Rail trips are made more frequently for business, shopping, and vacations than are bus trips and less frequently for personal business. Rail trips are more likely to be made traveling with a family member, friend,

TABLE 3 USERS RATING COMPARISON, 1985

Item	Bus 2/ %	Rail %
Arrive/Depart on Time	79.6/5.2	63.9/11.4
Frequency of Service	69.5/4.8	42.2/14.2
Condition of Vehicle	83.8/1.5	73.6/3.2
Condition of Terminal	67.0/5.8	56.3/10.2
Courtesy of Employees	84.9/3.0	82.2/2.4

Notes: 1/ Intercity bus rating choices were very good, good, fair, and poor. Intercity rail rating choices were excellent, good, satisfactory, poor, and unsatisfactory. Different rating choices could distort comparisons between the bus and rail modes.

2/ The number to the left of the slash is "Very Good" plus "Good" and to the right of the slash is "Poor" for bus; for rail the number to the left is "Excellent" plus "Good" and to the right is "Poor" plus "Unsatisfactory."

Source: MDOT, Bureau of Transportation Planning, Passenger Transportation Planning Section, Surface Systems Unit.

or associate than are bus trips. Air is the most likely option (other than automobile) if the rail trip could not be made; no option (other than automobile) dominates if the bus trip could not be made. Twice as many bus as rail travelers would not make the trip at all.

LIMITATIONS

- Because the user survey questionnaire was completed independently by the user, and not in a personal interview setting, it is possible that erroneous data were reported. This could be because of sensitive data like age and income, a lack of understanding, inadequately defined terms in the question, or poorly structured questions. For instance, respondents were asked to rate the station, but the questionnaire did not indicate which station—the one at the trip origin or the one at the trip destination. This problem was reduced somewhat by making the people distributing the questionnaire available to answer questions and provide direction. Their availability was limited, however, because only two surveyors were present on any given train.
- The user survey did not reflect year-round travel patterns and trip purposes. Because the survey was conducted in October and November, summer travel patterns and purposes are not precisely represented. For instance, the number and percentage of trips made by university students is higher than in the summer when the universities are not in session or enrollment is less. The number of users traveling with children would have been higher had the survey been done during the summer months. Also, the number and percentage of vacation and business trips would probably be different in the summer when more vacation trip making occurs.
- Comparison of 1985 user survey data with those from the earlier rail passenger surveys may be distorted by variations in questionnaire wording, terms, and response categories. The 1985 survey data have been compared with data collected in the 1980, 1977, and 1975 rail user surveys conducted in Michigan as well as results of selected other non-Michigan-specific surveys (Amtrak user survey, February 1979; *4; 5*). One of these surveys (1975) uses different age categories. Two (1980 and 1977) use household income instead of "family" income, and one (1975) reports individual income instead of either household or family income. One survey (1975) reports the top 10 responses about rail improvements; another (1980) reports the top 5 to keep service rated at a high level; the 1985 survey asked what one thing users would change about rail passenger service.
- Wording of questions regarding user trip origin and destination may be confusing. There appears to be some confusion on the part of survey respondents about trip origin and destination. Daily trip origin and destination are desired. However, some users assume their trip origin or destination to be their home location or final trip destination rather than where they started or ended their trip that day.

APPLICATIONS TO DATE

Demand Estimation

Demand estimation for rail passenger service has been undertaken in the past using trip length, time series data, and ridership on rail services similar to the proposed service. Little or no attention has been paid to trip purpose, user characteristics, schedule, and quality of service. The 1985 survey data are being used to estimate demand for the extension and reconfiguration of existing Michigan rail passenger services. These data also are serving as one basis for developing elasticities for use in a soon-to-be-operational microcomputer demand estimation model. For example, one route has a schedule that accommodates same-day round-trip rail travel for business and shopping. Survey results indicate how many trips are for these purposes and the types of persons making them.

New Station Potential Analysis

Knowing the origin and destination of rail passenger trips has been instrumental in developing new station justifications. For example, selected station analyses have been undertaken of boardings and deboardings in terms of their trip origins and destinations. This resulted in determining how many existing trips would use the new stations and how many new rail trips would be generated.

Service Improvement Analysis

Knowing how many business travelers are using rail service now and what their travel patterns are helps scheduling. It is one basis for determining whether additional trains or an adjusted schedule, or both, would increase business traveler use significantly.

Market Targeting

Knowing the array of users and trip purposes has been useful in identifying key segments of the rail service market. These include user groups such as business travelers, college students, and retirees. Major trip purposes include visiting friends and relatives, vacation, business, and shopping. Advertising can be oriented toward these groups and accommodating these trip purposes. Michigan data have been used by Amtrak and MDOT for this purpose.

Service Evaluation

The user rating of the service offers one basis for making facility and service improvements. Items rated include food and beverage quality, car comfort, car cleanliness, on-time performance, frequency of service, station condition, station parking, fares, employee courtesy, and service convenience. The state of Michigan and Amtrak are taking steps to improve such features as scheduling and frequency of service.

FUTURE DIRECTIONS

Attitudinal Survey

Some attitudinal data were collected in the 1985 study. Included were questions about attitudes toward various features of the service (on-time service, frequent service, comfort, etc.) and preference questions (what one thing would you change, higher speeds versus more frequent service). Additional attitudinal data are needed to ascertain modal trade-off potential for use in determining long-range elasticities. These data would be obtained using a survey technique referred to as "enveloping," that is, asking two or more questions about the same item to ensure that the attitude toward that item is being accurately measured.

Time Series Survey

One justification for the 1985 rail passenger study was to maintain a good data base with 5-year interval time series data. To continue this update frequency, a comprehensive user survey and study should be undertaken in 1990. That 1990 is a census year further underscores the desirability of conducting the study then.

User Group Analysis

Various dimensions of business travel have been examined, specifically, what percentage of today's business travel is accommodated by rail service and what travel patterns prevail within the constraints of Michigan's existing rail passenger service. More can be done for the business traveler. For instance, what are the characteristics of the business traveler who uses rail passenger service compared with the characteristics of the whole spectrum of business travelers? Similarly, more can be done for frequent users and weekday users. The same analysis can be applied to other key users of rail passenger service including college students and retirees.

Economic Impact Assessment

Certain economic benefits of rail passenger service accrue to the state, the communities served, the users of the service, and the general public. These should be documented and equated to their cost. The data and findings of the 1985 study provide one basis for this assessment.

Rail/Bus Coordination

Michigan's intercity rail and bus passenger schedules are not usually coordinated to allow one to feed the other. Only about 1 percent of Michigan's intercity rail and bus passengers use the other mode to access or egress the train or bus station. It appears that the two modes are not in direct competition with one another to a high degree because the amount of diversion that exists between the two is only 10 to 15 percent. It would therefore benefit each mode if intercity bus feeder services to and from rail passenger stations were improved through better schedule coordination.

On-Time Performance Improvements

Users in the TOL-DET-CHI corridor perceive on-time performance to be inadequate; approximately 15 percent rated it unacceptable. Efforts should be made to improve on-time performance in this Michigan corridor.

REFERENCES

1. *A Survey of Amtrak Users in Michigan.* Bureau of Urban and Public Transportation, Michigan Department of Transportation, Lansing, July 1975.
2. *Michigan Intercity Bus Study: A Comparison of 1985 and 1977 User and Ticket Surveys.* Passenger Transportation Planning Section, Surface Systems Unit, Michigan Department of Transportation, Lansing, Dec. 1985.
3. *Michigan Intercity Rail Passenger Study: 1985 Travel and User Characteristics.* Passenger Transportation Planning Section, Surface Systems Unit, Michigan Department of Transportation, Lansing, Nov. 1986.
4. *Pennsylvania High Speed Rail Feasibility Study: Market Research Surveys Using Direct Utility Assessment Techniques.* Parsons Brinckerhoff/Gannett Fleming; Pennsylvania High Speed Intercity Rail Passenger Commission, Oct. 1985.
5. *Survey of Markets Served by VIA Rail Canada in Northwestern Ontario.* Transport Canada Railway Passenger Directorate; Ontario Ministry of Transportation and Communications; Manitoba Department of Highways and Transportation; Ontario Ministry of Northern Affairs; VIA Rail Canada, Inc., March 1984.

Publication of this paper sponsored by Committee on Intercity Rail Passenger Systems.

Role of Feeder Buses in Supporting Amtrak Services in California

LYNN A. FRANKS

California's use of feeder buses has contributed significantly to the success of the state-supported Amtrak San Joaquin train route. Before the development of this bus network, the continued operation of the San Joaquin trains was threatened because of an apparent inability to meet state financial productivity standards. Passengers who use buses that connect with these trains now represent nearly 50 percent of the riders and produce more than 60 percent of the revenues. Improved efficiency, attributed primarily to the network of feeder buses, has placed the San Joaquin route in a secure position vis-à-vis the state's productivity standards. The development of the integrated feeder bus network as it relates to the San Joaquin route is described, and how this system contributed to preserving and enhancing San Joaquin service is explained. As the San Joaquin example illustrates, feeder buses can be a low-cost method of increasing Amtrak ridership and generating revenues.

California's involvement with Amtrak services is permitted by Section 403(b) of the Rail Passenger Service Act of 1970. Section 403(b) allows states to contract with Amtrak for services to supplement its basic system of trains. Through its Department of Transportation (Caltrans) California financially supports two Amtrak routes, the San Joaquin and the San Diegan. There are two daily round trips on the San Joaquin route from Oakland to Bakersfield. Caltrans extends financial assistance to three of the seven round-trip San Diegan trains that run from Los Angeles to San Diego (with a round-trip extension to Santa Barbara scheduled to start in October 1987).

Connecting bus service (also referred to as integrated bus-rail service and feeder buses), the subject of this paper, serves two major purposes: it increases service accessibility, and it extends markets. The result can be ridership and revenue growth for the associated train service.

DEVELOPMENT OF THE FEEDER BUS SYSTEM

Growth of the connecting bus service has been dramatic since its inception in 1980 when the state capital, Sacramento, was linked to the San Joaquin route. A dedicated bus, used exclusively to transport Amtrak passengers, traveled approximately 50 mi to meet the train at Stockton. Currently, the network of buses covers more than 1,000 route miles and on an average day provides 400 passengers with better access to trains. See Table 1 for route names and cities served by the various San Joaquin feeder buses.

San Joaquin Route

The early connecting bus service served only the San Joaquin route. That route was in a precarious condition because it was far below the state's mandated farebox recovery ratio of 55 percent for 403(b) trains. This efficiency criterion measures the ratio of revenues to operating costs. In contrast, San Diegan trains that received funding under the 403(b) program during the same period exceeded the farebox recovery constraint. The use of connecting buses became a key element in Caltrans' strategy to preserve the San Joaquin service.

Southern California Service Extensions

Service to Los Angeles Union Passenger Terminal (LAUPT) in 1981 was a significant addition to the connecting bus system. This service between Bakersfield and Los Angeles gave residents of the Great Central Valley direct Amtrak service to Los Angeles. Moreover, the two largest population centers in California—the Los Angeles Basin and the San Francisco Bay Area—were linked by a second Amtrak route, the Amtrak basic system's Coast Starlight. More detailed discussion of the performance of integrated buses illustrates the profound impact that this extension has had on the once fledgling San Joaquin service.

After opening the Los Angeles market to San Joaquin passengers, Caltrans shifted its attention to improving access for large numbers of people in that vast area. This process began in 1983 with a stop at Van Nuys that serves the San Fernando Valley, a section of Los Angeles with more than 1 million residents.

By transferring from the Los Angeles bus to San Diegan trains at Los Angeles, San Joaquin passengers could further extend their trips southward to Orange and San Diego counties, all the way to the border city of San Diego. To provide access to the large Long Beach market in southwestern Los Angeles County, Caltrans began bus service there in 1985. That year the San Joaquin Los Angeles connector bus also began serving Glendale, a city 6 mi from LAUPT and a stop on the route of the Coast Starlight.

Expansion of San Joaquin service east of Los Angeles began in earnest in 1986. A new bus route went as far east as San Bernardino, 59 mi from LAUPT. This became the longest bus route in the integrated bus-rail system. Travel time from San Bernardino to Bakersfield with intermediate stops at Riverside, Pomona, Pasadena, and Glendale is more than 4 hr.

In the spring of 1987 Caltrans introduced another eastern bus route to connect with San Joaquin trains. This service goes

---

Division of Mass Transportation, Rail Service Branch, Caltrans, P.O. Box 942874, Sacramento, Calif. 94274-0001.

TABLE 1 SAN JOAQUIN BUS ROUTES

Route Name	Major Cities Served	Train Connection Point	Bus End Point
Sacramento	Sacramento, Davis, and Chico	Stockton	Chico
San Jose	San Jose	Stockton	San Jose
North Bay	Santa Rosa, Napa, and Sonoma	Martinez	Santa Rosa
Tulare County	Visalia and Porterville	Hanford	Porterville
Long Beach	Long Beach, Torrance, and Los Angeles	Bakersfield	Torrance
Los Angeles Airport	Los Angeles, Van Nuys, and Santa Monica	Bakersfield	Los Angeles Int'l Airport
San Bernardino	Glendale, Pasadena, Pomona, Riverside, and San Bernardino	Bakersfield	San Bernardino
Barstow[a]	Mojave, Tehacapi, and Barstow	Bakersfield	Barstow
Los Angeles[b]	Los Angeles	Bakersfield	LAUPT[c]
San Diego	Los Angeles, Long Beach, Santa Ana, Oceanside, and San Diego	Bakersfield	San Diego

[a] Also connects with the Desert Wind in Barstow.
[b] Connects directly with San Diegan trains and allows for connections with the Sunset Limited and the Southwest Chief at LAUPT.
[c] Los Angeles Union Passenger Terminal.

to the high desert and Barstow. Because this route bypasses the congested Los Angeles area, however, it is a trip of only 3 hr 20 min. The Barstow bus connects with San Joaquin trains and the Desert Wind, providing Central Valley residents an easy connection to Las Vegas. Some valley residents also can make a more time-sensitive transfer to the California Zephyr (which originates in Oakland and terminates in Chicago) via the Desert Wind at Salt Lake City, Utah, than by meeting the Zephyr in Martinez.

Early 1987 also marked the extension of the Los Angeles bus to San Diego at late evening or early morning hours when San Diegan trains do not operate. With the addition of the San Diego bus, Bay Area to San Diego service is now available on all San Joaquin routes.

Northern California Service

During this period, new San Joaquin bus extensions were not limited to southern California. In 1984 Caltrans extended the Sacramento bus route 95 mi north to Chico, a college town. A year later Davis, 13 mi west of Sacramento with a University of California campus, became part of the Sacramento bus route. Finally, in 1986 the addition of two routes in the San Francisco Bay Area, one in San Jose and the other in the North Bay area of Sonoma County, gave greater choice and flexibility to San Joaquin riders.

In addition to these extensions, a Tulare County feeder bus began meeting the train at Hanford in 1982. This feeder bus provides easier train access for major population points in this adjacent county. Figures 1 and 2 provide a visual overview of the integrated train and bus system.

FIGURE 1 San Joaquin train and bus system (northern California).

San Diego Route

California applied the concept of an integrated bus-rail system to the San Diegan route in 1985. Service from the new intermodal transportation facility in Santa Ana linked Torrance and Long Beach to Amtrak's second busiest corridor, San Diego to Los Angeles. This route now connects with six of the fourteen San Diegan trains. Because the huge population center north of downtown Los Angeles (where LAUPT is located) is a logical extension of San Diegan service, connecting buses began to serve points as far north as Oxnard, 66 mi from LAUPT. A year later in 1986 this route was extended another 27 mi north to Santa Barbara. This bus route now meets four San Diegan trains in downtown Los Angeles.

Administration of the Integrated Bus Operation

A partnership is responsible for the operation of the dedicated bus links to the 403(b) trains. Caltrans pays 100 percent of the cost of these buses and receives a revenue credit from Amtrak for the bus portion of a passenger's ticket. Amtrak uses competitive bidding to select an operator to provide the service. In addition to assuming an active role in the bus operations, Amtrak provides integrated fares and ticketing procedures and

FIGURE 2 San Joaquin train and bus system (southern California).

access to its information and reservation system. The bus aspect of the operation thus becomes an integral part of the route system.

CONNECTOR BUS PERFORMANCE

Performance data will be limited to the San Joaquin route, because the dedicated bus system is considerably more extensive on that line than it is on the San Diegan and it is exclusively a 403(b) service. Also, the San Joaquin experience is an object lesson of a route that, in a relatively short time, was transformed from a marginal financial performer to one that has improved significantly and, moreover, has met state performance standards. The contribution of the feeder buses to this change has been substantial.

Ridership and Revenues

Ridership on the San Joaquin trains in January 1980, about 9 months before the start-up of dedicated bus service, was slightly more than 7,500 a month. A year later with only a small contribution from the sole dedicated bus, the monthly average rose sharply to around 13,000. This large relative jump in ridership resulted from adding the second train in February 1980. However, the number of people who rode the trains exclusively leveled off after the initial effects of the second train, and there was no growth of this group for the next 6 years. Indeed, the number of passengers who rode only the trains declined. Meanwhile, ridership on the San Joaquin route shot up to nearly 24,000 per month by 1986. This growth—over 10,000 per month—was due entirely to passengers who had a combined bus and rail trip.

An increase in the farebox recovery ratio from 32 percent in Fiscal Year 1981 to more than 63 percent today is attributed primarily to ridership growth produced by users of the connecting bus system. The farebox recovery ratio has not only surpassed the state-mandated standard, its margin has made possible the luxury of contemplating seriously service enhancements whose starter costs used to discourage any notions of experimentation.

Before the farebox ratio reached the secure zone, if it appeared that proposed changes could not immediately result in revenue enhancement—a particularly difficult standard—they never left the drawing boards. Now some short-term financial dislocations can be absorbed if the potential for long-term gains looks promising. An example of a major service change made possible by the current farebox ratio is the addition on June 15 of a significantly upgraded level of food service on two of the San Joaquin trains. In addition, Caltrans is in the process of requesting checked baggage service on these trains. Preliminary responses to this inquiry are cause for optimism.

Feeder Buses as Revenue Generators

Viewed in isolation, the cost of feeder bus service, which ranges from $1.28 to $2.20 per bus mile, exceeds the revenues (with the exception of summer and other peak travel months for a couple of the runs) that the service produces directly. (Table 2 gives cost information by route.) This seemingly unsatisfactory condition is acceptable, however, when viewed within a broader context. The average revenue per passenger on the San Joaquin route is around $20, and for those who combine a bus and rail trip it is usually in excess of this figure because of longer average trip lengths. Although it is frequently a losing proposition to transport passengers from a connecting bus to the train, this loss is generally offset by a greater amount of revenue produced by the entire trip. For every dollar spent on the Bakersfield to Los Angeles buses in Fiscal Year 1986, for example, $2.18 in ticket revenue was generated. (Table 3 gives generated-revenue-to-cost ratio by route.) Consequently, the feeder bus operation often enhances the revenue-to-cost ratio, even if, at times, more is spent transporting passengers to and from the train than is received

TABLE 2 SAN JOAQUIN BUS ROUTE COSTS

Route	Rate per Mile ($)	Daily Cost ($)
Sacramento	1.55	1,010.60
San Jose	1.28	407.36
North Bay	1.93	501.00
Tulare County	2.20	480.00
Long Beach[a]	2.18	1,750.00
Los Angeles Airport[b]	2.08	500.00
San Bernardino	1.63	570.00
Barstow	1.54	400.00

[a] Includes San Diego bus costs.
[b] Includes Los Angeles bus costs.

TABLE 3 SAN JOAQUIN REVENUE DATA, FISCAL YEAR 1986

Route	Generated-Revenue-to-Cost Ratio
Sacramento	267.5
San Jose[a,b]	75.0
North Bay[a,b]	225.0
Tulare County	100.3
Los Angeles[c]	218.0

[a]Data for April through June 1987.
[b]Estimate based on ridership reports.
[c]Includes all southern California buses.

for this service. The feeder bus system tends to serve as a revenue generator.

MORE DETAILED EXAMINATION OF THE SYSTEM

California's 403(b) connecting bus system, although a success, is not without some difficulties. Accessibility issues have been raised. These will be discussed later. Although a number of lines have been added, there have been some deletions, too, as indicated in the next paragraph. Service abolishments, however, have been stops, not entire routes or extensions. This could change, however, if some of the underperformers do not show marked improvement within the next 6 months; a small number of marginal routes or route extensions are under close scrutiny.

The Davis stop replaced the Lodi stop, located near Stockton. For 7 months before its abolishment, ridership at the Lodi stop averaged only 2.1 persons each day. Buses that served the Davis stop connected with two of the four San Joaquin trains. Poor performance, amounting to a daily average of only 1.6 riders during 1986, at the Northeast Sacramento and Roseville stops resulted in the substitution of an additional stop at Davis to serve passengers who had previously been picked up at the discontinued stops.

Route Selection

When Caltrans first selected routes only two criteria were used, population density and a history of bus service to pre-Amtrak passenger trains. By far the greatest emphasis was on population density. Although this factor continues to be a major consideration in selecting routes, evidence suggests that population density alone is not always sufficient for success. Experience has demonstrated that the absence of competition from other bus providers is often an important factor in route success, as well as the availability of additional train service. Caltrans has found that highway congestion and bus route configuration are factors to note. A stop at a specific attraction can also be of critical importance.

Selecting a route is an inexact exercise. When considering a prospective route, Caltrans evaluates the criteria mentioned and then, if sanguine about prospects, commences the service and monitors it to determine whether the hunch was correct.

Monitoring the integrated bus service consists of two components. Weekly ridership reports furnished by Amtrak station personnel are reviewed, and the financial data are evaluated to determine whether costs and revenues are in line. Besides this quantitative analysis, employees of Caltrans' Rail Branch periodically ride the service to make qualitative assessments. This on-board evaluation sometimes is supplemented by other employees of the Division of Mass Transportation to provide additional coverage from different perspectives. Close attention is also paid to passenger comments, particularly those in writing, and to the analysis of survey results.

Route Performance

A sharp variation characterizes the performance of the several feeder bus routes. An analysis of factors that appear to affect route performance is included with the route comparisons.

The Los Angeles Basin routes are the strongest performers in terms of ridership and financial impact. To a large extent these routes subsidize some of the others that are underperformers. The strength of the Los Angeles Basin routes, with an average daily ridership of 211, more than any other factor, makes the overall feeder bus system a success. Annual route ridership data are shown in Figures 3–5.

As mentioned, experience indicates that population density is not per se a guarantee of success with these operations; when the population is large, however, as is the case in southern California, it makes failure difficult. The population factor tends to swamp others in such instances. Capturing just a small fraction of the intercity riders to and from this massive market can result in success. Added to the sheer size of this area are the numerous attractions, some out of the ordinary and most available year round, that encourage travel. Too, this service has been around for 6 years so word-of-mouth knowledge, a key factor in developing the service, is in the mature stage.

The Sacramento route, with its Fiscal Year 1985–1986 generated-revenue-to-cost ratio of 267.5 percent, is more efficient in this regard than its southern California counterpart (Los Angeles Basin to Bakersfield). However, the Sacramento route has far fewer passengers than the route to and from Bakersfield. Other reasons make the Sacramento bus less of a successful performer than its ratio of generated revenues to costs implies. Ridership growth on the Sacramento to Stockton portion of the route is insubstantial, whereas the number of passengers on the Bakersfield buses continues to grow at an impressive rate. The Chico extension of the Sacramento bus route has failed to produce the expected ridership, and because it has provided no indication of improved performance it is under critical scrutiny.

The Tulare County feeder bus, with a 100.3 percent generated-revenue-to-cost ratio, is breaking even although this route has the highest per mile cost. The newest routes have a much smaller data base but offer some interesting comparisons. After dismal starts, the North Bay and San Jose buses both demonstrated improvements in ridership and revenue. The North Bay bus generated a revenue-to-cost ratio of 36.1 percent during the first 3 months of service. Now that ratio is more than 225 percent for a comparable period 1 year later. San Jose's growth rate has been impressive, too, but, because it started at such a low percentage, continuation of this service is considerably less secure than is that of the North Bay bus. The first 3 months of service of the San Jose bus produced a

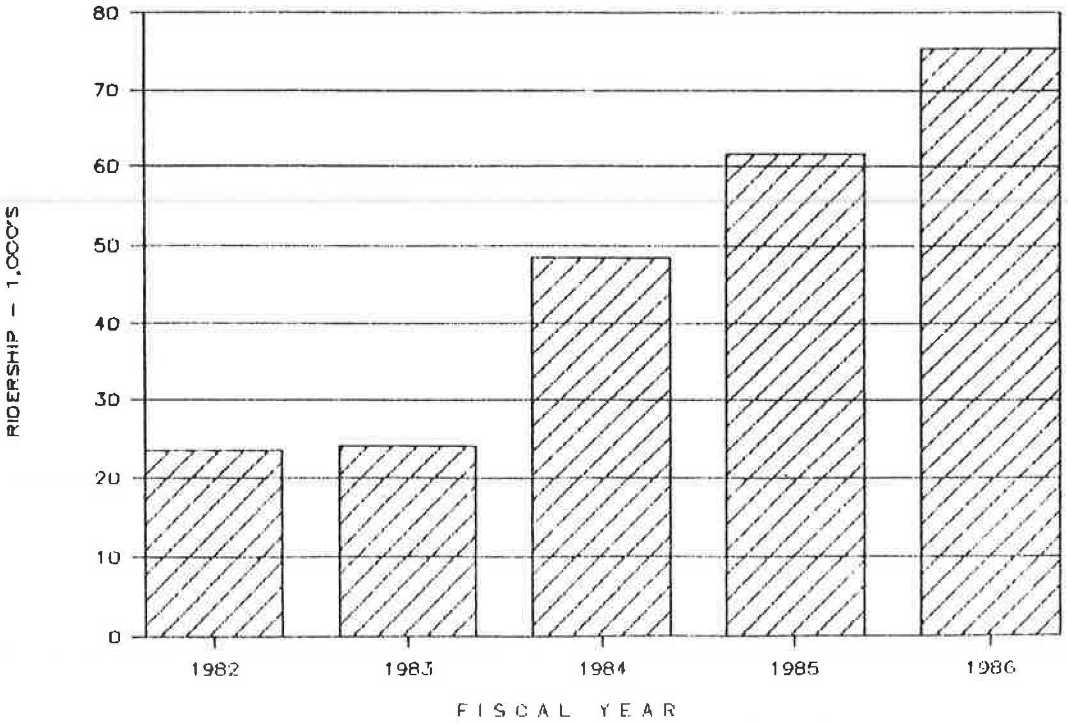

FIGURE 3 Annual ridership—Bakersfield bus.

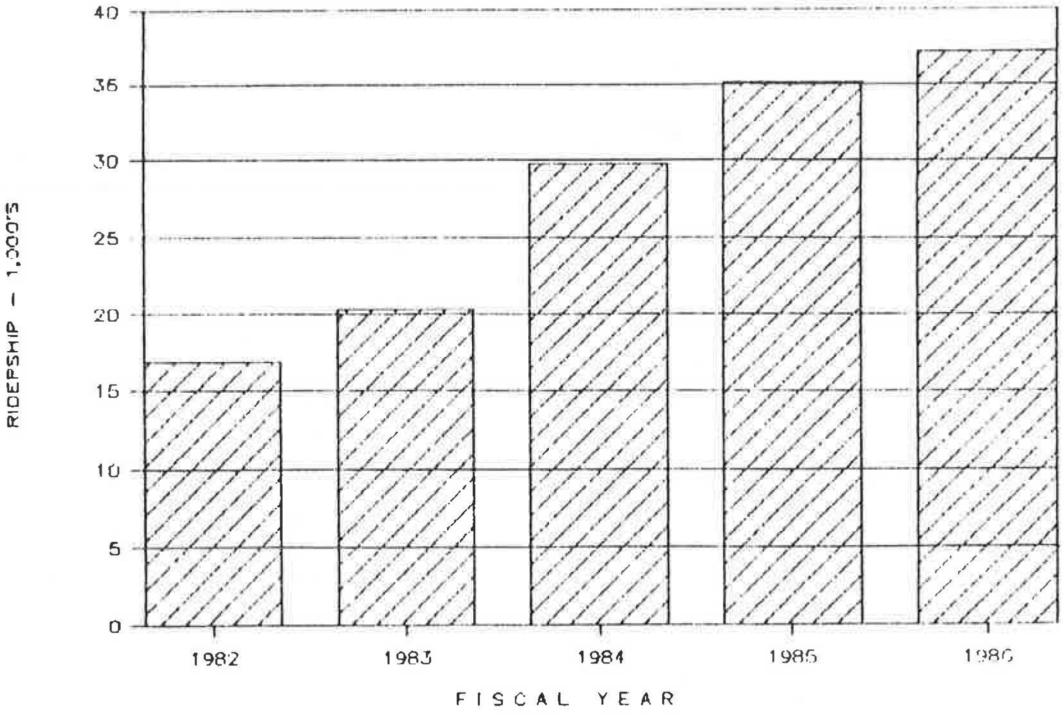

FIGURE 4 Annual ridership—Sacramento bus.

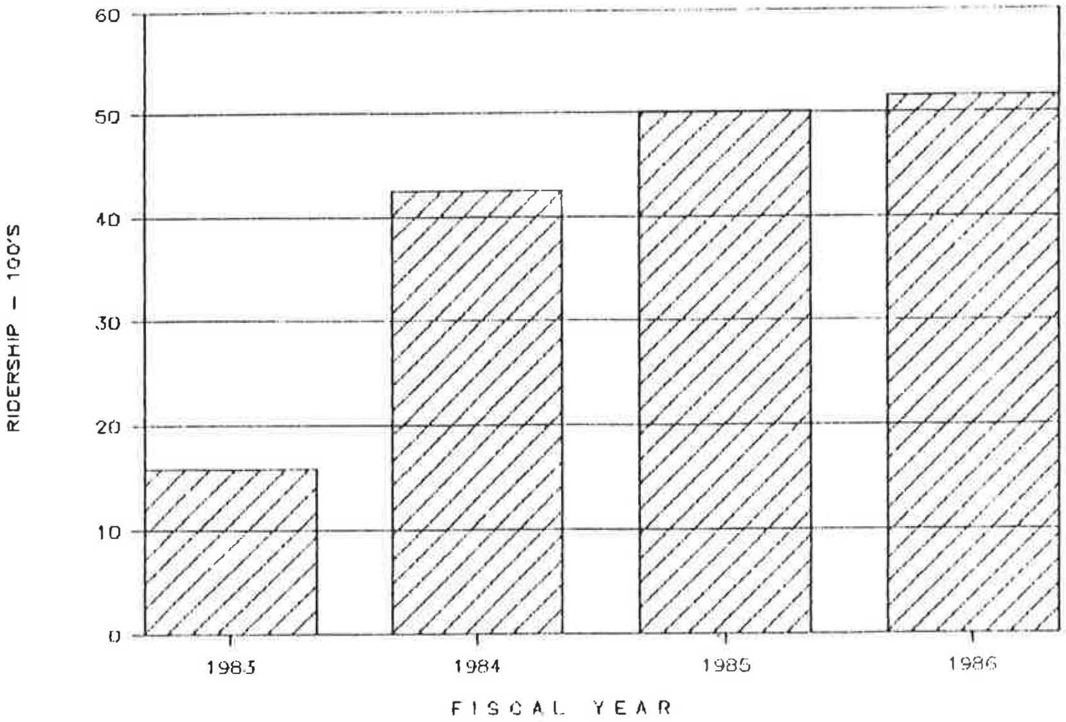

FIGURE 5 Annual ridership—Tulare bus.

generated-revenue-to-cost ratio of only 13.8; currently the service yields a ratio slightly in excess of 75 percent. Further improvement is necessary to warrant the continuation of the San Jose service.

Comparison of the conditions on the San Jose route with those on the North Bay route indicates some major dissimilarities and appears to provide some insight into their unequal performance. The San Jose route has two considerable advantages: a substantially larger population base and at its terminus an Amtrak staffed station, where amenities and information are available. The North Bay route has certain attributes, however, that in combination are conducive to integrated bus-rail ridership. Regularly scheduled intercity bus service from Sonoma County to stops that are also served by San Joaquin trains is much less frequent, requires a transfer, and usually involves greater distances than similar bus services from San Jose. Unlike San Jose, cities on the North Bay route are not served by the Coast Starlight, whose southern terminus is the Los Angeles Basin. Further, the North Bay bus route to the train is more direct than the circuitous one from San Jose.

A major amusement attraction, Marine World/Africa USA, is a stop on the North Bay route, but until April 5, when the Great America Amusement Park was added, there was nothing comparable on the San Jose route. It will be interesting to note whether the addition of the Great America stop in Santa Clara will enable the San Jose route to attain ridership levels equal to or greater than those achieved on the North Bay route. Because promotion of this stop has yet to have much effect, it is too early to discern the viability of the Great America Amusement Park. (Marine World has produced impressive ridership figures whereas the other Vallejo stop has yielded virtually no riders. This is a case of the attractiveness of a site overwhelming the population criterion.)

Uncertainty in Determining Successful Routes

Caltrans does not know enough about the precise impact of the variables described in this paper to formulate a hypothesis capable of predicting a successful feeder bus route. More knowledge of the factors that are present in a successful operation is required before a hypothesis of this kind can be made. Caltrans believes, however, that there is a reasonable chance for success if prospective bus routes are selected in terms of the factors discussed. Although there is still a certain amount of guesswork and reliance on intuition, route planning has gone beyond simply looking at population numbers. Continued analysis of the conditions associated with the most successful routes should enable Caltrans to better gauge the effectiveness of new route proposals.

When a route has been selected, various criteria are used to determine the necessary and desirable features and amenities for the various stops. Those criteria are given in Table 4.

Break from Tradition

Since the inception of the connecting bus program, service has been for the exclusive use of Amtrak passengers. This has not only simplified matters, it has been used as a marketing tool. With the start-up of the Barstow service, exclusivity of this kind is no longer universal. The operator who provides the Barstow service has added the Amtrak connecting bus service to his regular route from Bakersfield to Barstow. The mixing of passengers has resulted in a lower cost of service than

TABLE 4 STANDARDS FOR AMTRAK FEEDER BUS STOPS

Criteria / Standards	1 Comfort and Safety	2 Trip Information and Marketing	3 Tickets	4 Convenience of Stop Location (access)	5 New Location Notice
C. Minimum	Shelter lights	Sign, posted schedule, price, destination	None	Along the route, existing business facility	Temporary sign, map and description posted at old stop and on bus
B. Target	Plus Telephone, seating, and restrooms	Plus Literature large signs	Information on where to buy tickets	Locate at a transportation station	Plus Amtrak Reservation Bureau information and other Amtrak information
A. Ideal	Plus Food, Attendants, shops	Plus Paid advertising, travel agents, yellow pages	Plus Tickets on sale	Plus Pathfinder signs, parking lot	Plus Paid advertising and publicity

otherwise would have been possible. Lower cost was the rationale for the experiment. Caltrans is optimistic, however, that this particular combination of Amtrak bus-rail passengers and regular bus riders will not fail. This outlook is based largely on the attitude of the operator, who appears to be determined to make the service successful, and on the nature of the market. The first 3 months of this service have produced quite acceptable ridership—an average of more than 19 passengers per day. Nevertheless, Caltrans intends to closely monitor, especially in a qualitative manner, this route's performance.

Accessibility Factor

The San Joaquin trains currently use high-level equipment. The trainsets have at least one Superliner coach car that has lower-level seating. With a portable ramp aboard this car, passengers in wheelchairs can access the train. Consequently, there is accessible service on the entire rail portion of the route. Full accessibility is not the case, though, with the feeder buses. None of the feeder buses is equipped with a wheelchair lift.

Caltrans continues efforts to achieve complete San Joaquin route access. So far cost considerations have discouraged the use of any of the various options explored, such as parallel van service and mandatory wheelchair lifts on all feeder buses. In hopes of discovering a much less expensive method of achieving total route accessibility than those examined, Caltrans has recently hired a consultant to inventory all public transportation providers who serve the areas along the San Joaquin route. This activity is designed to determine the totality of available accessible services. The report is due in June 1988.

Until there is resolution of the total route accessibility issue, the feeder bus operations limit participation in the service by a segment of the traveling public. The dilemma facing Caltrans is how to remove this inadequacy without undermining the financial attractiveness of this service.

CONCLUSION

The success of the San Joaquin route owes much to the contribution of the integrated feeder bus network. Primarily because these buses provide almost one-half (when including Amtrak's supported San Francisco to Oakland feeder buses) of the route's riders and yield more than 60 percent of its revenues, in less than 4 years the San Joaquin trains were transformed from a service with a precarious future to one with a solid record of performance. Expanding access to the trains in a cost-effective manner has been the hallmark of the San Joaquin feeder buses.

Publication of this paper sponsored by Committee on Intercity Bus Transportation.

Grade Crossing Safety and Economic Issues in Planning for High-Speed Rail Systems

JAMES J. ROZEK AND JOHN A. HARRISON

A serious problem facing planners of high-speed rail (HSR) systems in the United States is the difficulty of locating suitable rights-of-way in heavily built-up metropolitan areas. A proposed solution is often the use of existing rail corridors that generally have at-grade crossings in the close-in environs of a city. Highway grade crossings are incompatible with HSR operation because of the public safety hazards presented by the speed and frequency of train service in HSR corridors. Nevertheless, the cost and, in some cases, the feasibility of grade separating these existing routes essentially preclude their use if all highway grade crossings must be eliminated. Safety and economic issues that should be considered by planners and designers in determining whether at-grade crossings are appropriate for the system they are planning are discussed. It is concluded that, although no one can expect a high-speed passenger rail system to have a perfect safety record indefinitely, the public will demand that HSR safety be equivalent to or better than that of existing conventional rail passenger service and comparable with that of air travel. Therefore, ways must be found to improve safety at crossings. In the final analysis, the cost of making grade crossings sufficiently safe for use on HSR lines may approach the cost of eliminating them altogether. The cost savings versus the liabilities of not fully eliminating grade crossings must be evaluated on a case-by-case basis.

Intercity passenger rail service in the United States has reemerged as an effective competitor and a complement to the automobile and air modes in corridors that are 200 to 400 mi long. Air travel congestion has resulted in delays, cancellations, and poor adherence to schedules. Intercity automobile travel has deteriorated with urban congestion and inadequate or incomplete roadway networks that are increasingly in need of repair. High-speed rail (HSR), as introduced first in Japan and further developed more recently in Europe, is capable of providing competitive travel time and cost in targeted urban markets. A number of U.S. applications are in the feasibility and conceptual planning phases.

A serious problem facing planners of HSR systems in the United States is the difficulty of locating suitable rights-of-way in heavily built-up metropolitan areas. A proposed solution is often to use existing rail corridors in the close-in environs of a city [similar in concept to the TGV's (Très Grande Vitesse) use of conventional trackage close to Paris and Lyons] that provide access but have some penalties (e.g., speed restrictions due to curves and rail and highway grade crossings). Highway grade crossings are generally incompatible with HSR operation because of the public safety hazards presented by the speed and frequency of train service in HSR corridors. Nevertheless, the cost and, in some cases, the feasibility of grade separating existing routes essentially preclude their use if all highway grade crossings must be eliminated.

Safety and economic issues that should be considered by planners and designers in determining whether at-grade crossings are appropriate for the system they are planning are investigated.

BACKGROUND

Foreign Experience

The development of high-speed passenger rail technologies has taken place almost entirely in Japan, France, Great Britain, and Germany. These countries have consistently placed a high priority on passenger rail service as a matter of national policy and have developed extensive passenger networks. The Japanese introduced the first high-speed line in 1964 between Tokyo and Osaka. The Shinkansen or "bullet" train system, which has been expanded to 1,225 route miles, has entirely new track and equipment and no grade crossings. The French TGV Southeast Line, which opened in 1981 between Paris and Lyons, operates at up to 168 mph on new concrete tie track with no at-grade crossings. In the environs of Paris and Lyons, as well as on other conventional rail lines in France, TGV trains operate at slower speeds, still providing a high level of service and ride comfort. The conventional lines have at-grade highway crossings in suburban and rural areas.

The basic technology options for high-speed service including combinations of equipment, track, and propulsion types are summarized next.

Technology Options

- Improved conventional (IC) equipment on upgraded existing tracks: This option is the least costly and uses diesel powered "tilt body" or conventional equipment with maximum speeds of about 125 mph. This option involves sharing track with freight and commuter traffic. Many highway crossings are at grade.

J. J. Rozek, Parsons Brinckerhoff Quade & Douglas, Inc., 11767 Katy Freeway, Suite 810, P.O. Box 19672, Houston, Tex. 77079. J. A. Harrison, Parsons Brinckerhoff Quade & Douglas, Inc., 50 Park Place, Newark, N.J. 07102.

- Advanced technology (AT) on existing track: Different versions of electric "tilt body" and more conventional trains, which can attain speeds of up to 150 mph on existing tracks, are being developed and considered by a number of countries.
- HSR: New equipment is used on partly or totally new track. State-of-the-art equipment on new dedicated track, capable of supporting speeds of up to about 188 mph, on which at-grade crossings are completely eliminated or operate under the most stringent control.
- Very high-speed rail (VHSR) (250 to 300 mph) goes beyond steel wheels on rail (e.g., maglev) and is totally grade separated.

Table 1 is a list of existing foreign HSR operations.

Future Foreign Activity

The Germans and the French are currently planning and constructing extensive application of HSR technologies. The Japanese have already established a high-speed network.

The countries of western Europe are discussing and planning a network of high-speed rail to serve an integrated travel market. The European Conference of Ministers of Transport (ECMT) is an intergovernmental organization that includes 19 European countries and 4 associated countries (Australia, Canada, Japan, and the United States). The ECMT studies transportation policy and the organization of railways and rail transportation. This organization has adopted a formal common definition of high-speed railway lines for main international travel and established 156 mph as the nominal speed for new lines of international importance (*1*). (In the United States, 125 mph is normally accepted as the boundary line between conventional rail and HSR.) The high-speed lines in service, under construction, and being planned as part of that network are given in Table 2.

The estimated cost of the new European lines varies from about $5.2 million to $32 million per mile, depending on the terrain, urban development along the route, and the number of highway crossings to be grade separated. The extent to which highway grade crossings must be eliminated can influence the economic feasibility of new lines.

United States

In the United States a number of private and state-sponsored initiatives to introduce high-speed rail are in progress. HSR or VHSR systems are being, or have been, studied for the intercity corridors listed in Table 3.

The magnitude of a project for implementing an HSR system and the complexity of its interrelated issues necessitate careful and comprehensive planning. Economic viability is an extremely important consideration. Selection of a technology and identification of a feasible and operationally adequate corridor are only two of the factors to be evaluated for candidate corridors that have high populations and densities, intercity travel affinity, and a physical separation attractive for HSR competition with other modes. The decision of whether to grade separate all highway crossings is an important consideration in many of the corridors listed in Table 3.

RAIL-HIGHWAY GRADE CROSSING DILEMMA

In addition to defining a suitable corridor that provides the physical environment for high-speed operation as well as

TABLE 1 EXISTING FOREIGN HSR OPERATIONS

Country	Train Designation	Technology Option	Maximum Speed (mph)	Least Restrictive Crossing
Germany	IC	AT	125	At grade
France	TGV	HSR	168	Grade separated
Japan	Shinkansen	HSR	153	Grade separated
Great Britain	HST	IC	125	At grade
Italy	Pendalino	AT	125	At grade
Spain	Talgo	AT	125	At grade
Sweden	X-2	AT	125	At grade
Canada	LRC	IC	125	At grade

TABLE 2 EUROPEAN HIGH-SPEED LINES OVER 156 mph

Country	Line	Distance (mi)	Status	Maximum Speed (mph)
France	Paris-Lyons	267	Operating	169
Italy	Rome-Florence	163	Under construction	156
Germany	Mannheim-Stuttgart	65	Under construction	156
Germany	Hanover-Würzburg	204	Under construction	156
France	Paris-Le Mans-Tours	200	Under construction	188
France–United Kingdom	Paris-London Channel	100	Being planned	188
Belgium-Netherlands	Brussels-Amsterdam	100	Being planned	188
Germany	Cologne-Frankfurt	100	Being planned	185
Germany	Nuremburg-Ingoldstaadt	63	Being planned	185
Germany	Raitart-Offenburg	31	Being planned	185
France	Paris-Strasbourg	668	Being planned	188
Italy	Milan-Bologna	125	Being planned	156

TABLE 3 U.S. CANDIDATE HSR CORRIDORS

Corridor	Length (mi)	Technology	Maximum Speed (mph)	Estimated Cost ($ billions)
Los Angeles–Las Vegas	230	VHSR	250	1.9
Tampa-Orlando-Miami	295	HSR	120–180	1–5
Montreal–New York	365	HSR	185	1.5
Washington–Boston–Northeast Corridor	455	IC/AT	125	2.2
Philadelphia-Pittsburgh	320	HSR/VHSR	160–250	7–10
Chicago-Milwaukee	79	VHSR	250	1.2
Chicago-Detroit	279	IC	125	0.7
Houston–Dallas–Fort Worth	273	HSR	185	1.7
Cleveland-Columbus-Cincinnati	244	HSR	170	3.0

time-effective access to the cities served with acceptable social and environmental impacts, HSR planners must decide how to handle the many intersections where roadways and existing railways cross the HSR corridor. The safest solution is to eliminate such intersections by grade separation, road relocation, or closure. Grade crossings of railroads and highways represent the highest fatal accident category for rail in the United States. Rail grade crossings may represent a significant public concern about HSR implementation and certainly represent a significant planning element. In a recent study of an HSR application in the Houston–Dallas–Fort Worth corridor, for example, the cost of grade separations for highways, which included 135 structures four of which had a total length of approximately 13 mi in dense urban areas, represented 17 percent of the total cost of the project, or $290 million (2). This illustrates the magnitude of the problem of providing complete grade separation in a typical HSR corridor.

Where grade separation is not feasible or is prohibitively expensive, at-grade intersections between HSR and highway may be necessary. French and British trains routinely cross highways at up to 125 mph; gates, warning sounds, and on-train closed-circuit television are used. The location of the grade crossing and the type of service dictate appropriate protection.

There has been considerable experience with at-grade railroad-highway crossings in the United States; more than 190,000 public crossings are currently in service. Accident data indicate that accidents can be reduced by 60 percent by installing flashing lights and by 90 to 95 percent by installing arms and flashing lights on passive controls. Railroad–motor vehicle accidents are caused primarily by motor vehicle driver error (e.g., inattention, misjudgment, error, or faculty impairment).

Because of the number of factors involved, and the planners' inability to control them, the use of grade crossings involves real-world risk that must be evaluated. There is no simple formula that will identify the correct alternative. Value judgments consistent with the individual corridor and its elements are required. The five most important factors in evaluating grade crossings for HSR are

- Safety,
- Cost,
- HSR and highway operation,
- Environmental concerns, and
- Institutional issues.

The key subject areas are

- Safety:
  - – Accident frequency,
  - – Fatality frequency,
  - – Injury accidents,
  - – School bus operation,
  - – Hazardous material carriers,
  - – Long or heavy vehicles, and
  - – Pedestrians.
- Cost:
  - – Capital costs and
  - – Operation and maintenance cost.
- Rail and highway operations:
  - – Vehicle delay;
  - – Emergency response time; and
  - – Traffic operation including vehicle operations, capacity constraint, roadway classification, signalization, travel pattern, rail operations, and frequency.
- Environmental concerns:
  - – Land use,
  - – Neighborhood impacts,
  - – Noise,
  - – Air quality, and
  - – Aesthetics.
- Institutional issues:
  - – Laws,
  - – Regulations,
  - – Policies and guidelines,
  - – Contractual obligations,
  - – Local ordinances, and
  - – Liability insurance.

Safety

HSR worldwide has an unblemished safety record, partly because existing HSR lines are totally grade separated. Unquestionably, HSR lines would be safest without grade crossings. Nothing less than automatic gates and signals should be considered acceptable for HSR operation. Likewise, all private crossings should be eliminated.

In addition to the direct cost of life and property, the perception of the safety of the HSR operator could have a severe impact on users' mode preference. Accidents at conventional rail grade crossings have been dramatic, well publicized, and in many cases catastrophic. Most grade crossing collisions are attributed to vehicle operator error: the driver does not recognize the crossing or the train. However, the publicity is usually unfairly focused on the railroad. Use of gates significantly reduces crossing accidents.

The probability of an HSR-automobile collision at a grade crossing is influenced by the number of motor vehicles, the frequency of trains, and the type of protection afforded. Accident frequency calculations have been developed to identify the effectiveness of different types of crossings. The existing accident rate calculations provide simple and approximate values. The U.S. Department of Transportation (DOT) accident prediction formula (*3*) combines a formula of prediction based on crossings characteristics as follows:

$$a = K \times EI \times MT \times DT \times HP \times MS \times HT \times HL$$

where

a = initial accident prediction (accidents per year at the crossing),
K = formula constant (0.001088),
EI = exposure index based on product of highway and train traffic $\left(\frac{C \times t + 0.2}{0.2}\right)^{0.3116}$ where C is annual average numbers of highway vehicles per day (total both directions) and t is average number of train movements per day,
MT = factor for number of main tracks [= $\exp(0.2912\ mt)$ where mt = numbers of tracks],
DT = factor for number of through trains per day during daylight (= 1.0 for gates),
HP = factor for highway surface (= 1.0 for paved),
MS = factor for maximum timetable speed (= 1.0 for gates),
HT = factor for highway type (= 1.0 for gates), and
HL = factor for number of highway lanes [= $\exp(0.1036h - 1)$ where h = number of highway lanes].

Applying the formula to a two-lane paved crossing with average daily traffic of 10,000 vehicles and an HSR operation of 50 trains at 185 mph would result in an accident prediction of 0.13 accident per year. (It is not known how much error is introduced by extrapolating the speed from currently normal levels to 185 mph.)

The U.S. DOT has also developed a formula for predicting the severity of a crossing accident (*3*). The probability of a fatal accident is calculated as follows:

$$P(FA/A) = \frac{1}{(1 + CF \times MS \times TT \times TS \times UR)}$$

where

CF = formula constant (695),
MS = maximum timetable train speed factor (= $ms^{-1.074}$),
TT = through trains per day factor [= $(tt + 1)^{0.1025}$],
TS = switch trains per day factor [= $(ts + 1)^{0.1025}$],
UR = urban – rural crossing factor [= $\exp(0.1880ur)$],
ms = maximum timetable train speed (mph),
tt = number of through trains per day,
ts = number of switch trains per day, and
ur = 1 for urban crossing or 0 for rural crossing.

Applying the formula to a two-lane urban crossing with 50 trains per day yields a fatality probability, given an accident, of 0.22 for a train operating at 100 mph and 0.35 for a train operating at 185 mph. (Again, it is not known how much error is introduced in extrapolating the train speed to 185 mph.)

To illustrate the potential frequency of accidents at grade crossings on a typical HSR line, assuming that all 109 estimated two-lane highways over the HSR line in the Texas study are at grade, in 1 year the probable number of accidents would be 0.13 × 109 = 14.17 and the probable number of fatalities would be 0.35 × 14.17 = 5 persons per year. (Note: A major problem with applying this formula to HSR is that it does not take into account train passenger fatalities. If train passenger fatalities were somehow accounted for in the equation, this number could rise substantially.) On the basis of 13 hundred million passenger miles projected in 1995 for the Texas corridor and an industry intercity average of 0.2 fatality per hundred million miles, the expected number of fatalities would be 0.2 × 13 = 2.6. Therefore, assuming that these probabilities are accurate, if the Texas corridor had fewer than 55 at-grade crossings ($^{109}/_{2}$), it could operate at a level of safety comparable with the industry average.

The foregoing crude estimation is not intended to be the basis for advocating grade crossings on HSR lines; it is merely an indication of what might be predicted to occur. Accounting for train passenger fatalities in these calculations would appear to make grade crossings most undesirable from a safety standpoint unless they could be protected exceedingly well to reduce the risk of accident to the lowest point possible. A more rigorous analysis of the risks and the factors affecting the frequency and severity of crossing accidents at well-protected crossings is clearly needed. The literature contains several research reports on the subject (*4–11*); nevertheless, much more study is needed. Improvements in crossing protection should be developed and tested for use on HSR systems to reduce the risk of accidents. Without such improvements it is questionable whether grade crossings are viable in high-speed territory.

Cost

The cost factors involved in evaluating grade separations versus grade crossings are capital costs and operation and maintenance costs. Two important questions are

- What are the costs associated with the crossing?
- Who will bear them?

There may be a potential for sharing grade separation costs by using highway grade crossing elimination funds to help defray the HSR system cost.

Grade Separation

In the recent feasibility study of the HSR service from Houston, Texas, to Dallas–Fort Worth (*2*), the estimated grade separation costs were

- HSR over four-lane highway: \$1.0 million
- HSR over railroad: \$1.0 million (equivalence is coincidental)
- Two-lane highway over HSR: \$0.8 million
- Four-lane highway over HSR: \$2.2 million

These cost estimates were based on the project design criteria for guideway and highway, acceptable grades, minimum clearances, and Texas Department of Highways and Public Transportation unit costs. The HSR line would be elevated at 14 of the 135 crossings. At two places in the Dallas–Fort Worth area the HSR would be elevated for a distance of more than 7 mi, and at two places in the Houston area it would be elevated for almost 6 mi. The extended elevated HSR line would be required because of the number of crossings and the vertical curve requirements of trains operating over 150 mph. Of the estimated 113 two-lane roadways elevated over the HSR, 105 were identified in the 224 mi between Houston and Dallas. The entire corridor, which occupies existing rail corridors through most of its length, passes through 10 counties and 19 intermediate cities.

Grade Crossing Protection and Maintenance Costs

The current cost of installing conventional crossing protection (flashing lights with gate arms) ranges from \$35,000 to \$50,000, and the operation and maintenance cost runs about \$2,000 per year per crossing. It is unknown what increased cost would be incurred in providing more sophisticated protection systems for HSR.

Highway Operation

The impact of adequate HRS crossings on the roadway and roadway network should be evaluated. A basic premise is that all advance warning and active devices will be provided to ensure the best quality crossing. Likewise, HSR trains should be equipped with appropriate devices and be operated so that, in the event of a stalled vehicle on the track, they can be brought to a stop (*12*).

The effects of vehicles queueing at a traffic signal during a crossing closure, and the effects on vehicles traveling on other roads, should also be analyzed. Likewise, the use of the crossing by emergency vehicles, alternative routes, and the impact of maximum delays should be evaluated.

The magnitude of the delay encountered as a result of the closure of the grade crossing is a measure of the impact on the highway. The factors involved are

- Duration of the crossing closure,
- Hourly highway traffic volume, and
- Potential train delays.

The minimum advance warning given in the *Texas Manual on Uniform Traffic Control Devices* is 20 sec (*13*). Motor vehicle travelers find any delay greater than 50 sec annoying and troublesome. However, for trains traveling at speeds in excess of 100 mph, delays would be much larger. If the braking system of an HSR vehicle traveling at 150 mph were applied at a constant deceleration of 3 ft/sec^2, it would take more than 1 min to stop the train, and the train would travel almost 3 mi. Assuming a reaction and confirmation time of 40 sec plus a control time of 50 sec (which represent the time the protective warning devices are active before a train enters and after it leaves), a minimum of 2.5 min of vehicular delay could occur. And, if, coincidentally, trains were approaching from both directions, a delay in excess of 5 min could occur.

Total delay can be estimated by the following formula (*4*):

$$D = [(T/2 + 0.10)\,N + (N/n)^2]/60$$

where

D = total delay (min),
T = duration of closure (min),
N = number of vehicles delayed, and
n = number of highway lanes.

Assuming peak-hour traffic of 1,000 vehicles per hour per direction,

$$D = \left\{\left[\left(\frac{2.5}{2}\right) + 0.10\right] 80 + \left(\frac{80}{2}\right)^2\right\}/60$$

= 28 vehicle minutes of total delay per crossing.

The results of the analysis could be compiled on a per day, per week, or yearly basis for an individual crossing or the entire corridor.

Advance Warning

Advance warning to facilitate vehicle recognition should be carefully located before the crossing. The distance from the crossing should be established on the basis of the operating speed and the physical characteristics of the roadway and the terrain. The advance warning should be located before a decision zone so that the crossing signal is not unexpected and drivers can see it in time to react. The two types of active devices are flashing signs and signal supplements. The flashing signs can indicate whether to proceed or stop (e.g., Prepare to Stop When Flashing). Strobe lights in a flashing white light can supplement a traffic control signal. This configuration is intended to draw motorists' attention in situations in which the signal is unexpected or difficult to distinguish from the lights. Appropriate countermeasures should be used to eliminate devices that detract from motorists' ability to identify and properly respond to a crossing closure.

Automatic gates with flashing lights are probably the minimum basic requirement on any highway that crosses HSR tracks at grade. The gates should be activated by timed devices. If freight trains or rail traffic other than the HSR use the tracks, the operation of the gate and flashing lights should be timed so that motorists do not wait an excessive amount of time for non-HSR trains.

The crossing should also be constructed so that pedestrians and other nonmotorized users such as bicyclists heed the warning. Devices that deter animals from entry should also be considered. An at-grade crossing is an unprotected entry and may be a particular problem where the remainder of the corridor is fenced. Animals could enter the right-of-way at a crossing and become trapped by the fencing along the line.

Mandatory stops by trucks, semitrailers, and buses may not be appropriate for HSR crossings because the potential for these vehicles to stall on the tracks is increased. Analysis may show that restricting the types of vehicles that can cross HSR tracks at grade might be worthwhile.

An important element of the operation of at-grade crossings and their active warning devices is provision of efficient and timely corrective maintenance response. Gate arms are frequently damaged; they are damaged if they descend on a vehicle proceeding through the crossing when the signal is activated or if they are vandalized. A corrective maintenance program should be established with qualified personnel within an appropriate response zone and with adequate spare parts such that any "outage" can be repaired soon after it is detected. Other forms of control might be applied in the interim, including reduction of train speeds or manual supervision of the crossing.

HSR Operation

Punctuality, reliability, and safety are all key for successful HSR operation. Strict safety measures and procedures must be implemented to avoid endangering passengers. Route protection, including induction loops, interlocking signaling, and speed monitoring, is the basis for safe operation. The nature of the technology and the speed at which the HSR operates will help determine the level of protection required.

Automatic train detection through electrical circuitry can be used to advise motorists of an oncoming train and to activate the advance warning signals and train control. The electrical circuit uses the rail as a conductor; the presence of a train shunts the circuit. The system should be designed fail-safe so that any shunt of the circuit—by vandalism, maintenance equipment, or a broken rail—will have the same effect. Standby power should be provided in the event of power outage.

Environmental Concerns

The Environmental Protection Act requires that an appropriate environmental analysis be done of any proposed HSR corridor. This would involve a characterization of the corridor and the effect of the construction and operation of the HSR on the social, economic, and environmental characteristics of the corridor. The issue of elevated versus at-grade crossings will have mixed effects. The elevated roadway or railroad will have visual as well as noise impacts. Noise can possibly be mitigated. At-grade crossings have safety impacts. These impacts must be measured against generally accepted values and evaluated.

Associated impacts including displacement of land through right-of-way acquisition and disruption of land use, community, and neighborhood activity patterns must also be considered. Reduction in economic activities and property values may also be an issue. The communities that the HSR line serves will have the direct benefit of the service as well as its construction. Those communities through which the train passes may perceive the HSR as a safety hazard, a disruption, and that the only benefit they receive is the maintenance activities. They may perceive at-grade crossings as hazardous to their traveling public. State agencies generally have the authority to establish crossings.

Institutional Issues

There is a host of institutional issues regarding the use of grade crossings on new HSR rail lines. State transportation departments and public utility commissions vary widely in their laws and regulations regarding public safety vis-à-vis grade crossings. Many local governments also have ordinances that address the speed of trains through urban and suburban areas where complete rail-highway grade separation does not exist. Liability insurance coverage (availability and cost) is another important factor to consider in evaluating the use of at-grade crossings on HSR lines (*14*).

Each proposed HSR system will have to deal with state and local laws and ordinances to determine the feasibility and costs applicable to that system. Institutional issues may very well drive the decision, not purely technological, economic, or safety considerations.

CONCLUSION

HSR around the world has an enviable safety record. The Japanese Shinkansen has operated since 1964 carrying over 2,300 million passengers without a single casualty. The French TGV Southeast Line, operating since 1981, has had a similar unblemished record. Both of these systems, however, are completely grade separated.

HSR's safety record is one of its selling points; safety should not be compromised by introducing an unnecessary risk factor. Therefore, for grade crossings to be used on HSR lines, they must be made extremely safe.

Although no one can expect a high-speed passenger rail system to have a perfect safety record indefinitely, the public will demand that HSR safety be equivalent to or better than that of existing conventional rail passenger service and comparable to that of air travel. Therefore ways must be found to improve safety at crossings.

Further research on the cost and risks of grade crossings on HSR lines is called for. The following topics are appropriate for further research:

- Innovative active warning devices,
- Highway vehicle–activated versus train-activated crossings,
- Improvements in signal visibility,
- Evaluation of driver behavior at crossings,
- Impacts of long and heavy vehicles,
- Effects of nighttime and inclement weather, and
- Determination of highway user level of understanding of crossing control devices.

Grade crossings should not be perceived as totally incompatible with HSR, but they must be carefully analyzed and evaluated before acceptance as part of HSR implementation. In the final analysis, the cost of making grade crossings sufficiently safe for use on HSR lines may approach the cost of eliminating them altogether. The cost savings versus the liabilities of not fully eliminating grade crossings must be evaluated on a case-by-case basis.

REFERENCES

1. *High-Speed Traffic on the Railway Network of Europe.* Report of the international seminar, Hanover, Federal Republic of Germany, April 12–14, 1986. Economic Research Center, European Conference of Ministers of Transport, Paris, France, 1986.
2. *Project Feasibility Report: ICE Intercity Express, Dallas-Houston.* The German High Speed Consortium; Parsons Brinckerhoff/DE, July 1985.
3. *Railroad-Highway Grade Crossing Handbook,* 2nd ed. FHWA-TS-86-215. FHWA, U.S. Department of Transportation, Sept. 1986.
4. R. C. Taggart and P. Lauria. *NCHRP Report 288: Evaluating Grade-Separated Rail and Highway Crossing Alternatives.* TRB, National Research Council, Washington, D.C., June 1987.
5. J. A. Hopkins. *Grade Crossing Protection in High Density, Passenger-Service Rail Corridors.* FRA, U.S. Department of Transportation, 1973.
6. *Rail-Highway Crossing Accident/Incident and Inventory.* Bulletin 9, Calendar Year 1986. Office of Safety, FRA, U.S. Department of Transportation, June 1987.
7. *Use of Existing Highway Right-of-Way for High Speed Rail Transportation.* Texas Transportation Institute, College Station; State Department of Highways and Public Transportation, Austin; FHWA, U.S. Department of Transportation, Feb. 1985.
8. *Rail-Highway Crossing Safety Report.* Office of Safety, FRA, U.S. Department of Transportation, July 1985.
9. R. W. Eck and J. A. Halkias. *Further Investigation of the Effectiveness of Warning Devices at Rail-Highway Grade Crossings.* In *Transportation Research Record 1010,* TRB, National Research Council, Washington, D.C., 1985, pp. 94–101.
10. W. D. Berg. Causal Factors in Railroad-Highway Grade Crossing Accidents. In *Transportation Research Record 847,* TRB, National Research Council, Washington, D.C., 1982, pp. 47–53.
11. P. Mengert. *Rail-Highway Crossing Hazard Prediction Research Results.* DOT-TSC-FRA-79-1. FRA, U.S. Department of Transportation, March 1980.
12. *Transportation Research Record 1010: Traffic Control Devices and Rail-Highway Crossings.* TRB, National Research Council, Washington, D.C., 1985, 122 pp.
13. *Texas Manual on Uniform Traffic Control Devices.* State Department of Highways and Public Transportation, Austin, 1980.
14. D. S. Glater and T. K. Mond. *Legal Effects of Use of Innovative Equipment at Railroad-Highway Grade Crossing on Railroad's Accident Liability.* Report DOT-TSC-FRA-79-19. FRA, U.S. Department of Transportation, Oct. 1979.

Publication of this paper sponsored by Committee on Intercity Passenger Guided Transportation.

Worldwide Development of Propulsion Systems for High-Speed Trains

ERIC H. SJOKVIST

This survey starts with a brief overview of train speed records during the last century followed by a list of types of vehicles suitable for high-speed operation. Some rules applied in various countries for the utilization of adhesion between wheel and rail are presented. At high speeds air drag is the dominant part of total train resistance, and tables and curves showing this resistance versus speed are given for a number of modern high-speed trains. The impact of vehicle cross section and shape on train resistance is discussed. Relations among tractive effort, train speed, and required power at rail make it evident that, for speeds in the range of 200 to 400 km/h, this power must be of the order of 4000 to 10 000 kW. A number of high-speed trains, locomotives, and power cars are then described in some detail. The conventional adhesion-dependent wheel-on-rail technique is likely to be used in the future for maximum speeds of up to 300 and possibly 350 km/h. Because of their high power requirements, diesel-powered trains may be restrained to about 200 km/h; gas turbines can be used to perhaps 250 km/h. Straight electric propulsion is conceivable up to the limits of adhesion, maybe 350 km/h. For higher speeds, use of an adhesion-independent magnetic levitation system appears to be inevitable. So much power is required for these high-speed trains that a three-phase propulsion system has to be adopted. All recently developed high-speed trains have been designed for three-phase propulsion.

Despite ever-increasing competition from airline and highway transportation, railroads in a number of countries are still optimistic about their ability to conquer for themselves, on a commercially sound basis, a significant part of the high-speed transportation market. This survey will focus on the technical development of propulsion systems for guided transport using either wheeled vehicles on rail or some type of levitated vehicles on track.

During the last few decades, railroads and traction vehicle manufacturers have become increasingly aware that, at high speed, air resistance to movement is dominant and has to be reduced as much as possible to minimize power requirements and energy consumption. Figure 1 shows how the shape of the front end of some high-speed traction vehicles has changed over the last 30 years, shifting gradually to a lower and more streamlined contour. This and many other developments, primarily the availability of much more powerful propulsion systems, has shown remarkable results.

FIGURE 1 Changes in shape of front ends of high-speed traction vehicles.

The very first electric locomotive was demonstrated at a trade fair in Berlin in 1879 (Figure 2). It could run around a short track at a maximum speed of 13 km/h. Almost exactly 100 years later, on December 21, 1979, a Japanese magnetically levitated vehicle attained the highest speed ever recorded for guided transport, 517 km/h.

Figure 3 shows some but not all of the speed records set between 1903 and 1985 by either wheeled or magnetically levitated vehicles. On October 28, 1903, a German coach powered by three-phase slip-ring motors reached a speed of 210 km/h. On June 21, 1931, the "rail blimp," a German "Schienenzeppelin" using a diesel-driven propeller ran at 230 km/h, and on May 11, 1936, the first high-speed German electric locomotive (E 03) achieved 200 km/h. Then the French National Railways (SNCF) entered the race. On February 21, 1954, a CC 7121 electric locomotive ran at 243 km/h, and on March 28 and 29, 1955, two locomotives, the CC 7107 and the BB 9004, both attained 331 km/h, a record that was going to last for a long time.

Interest in high-speed traction vehicles using gas turbines as prime movers started to grow in the mid-1960s, especially in France, and such a vehicle ran at 230 km/h on June 13, 1967. After further development, a gas-turbine-powered precursor to the French Très Grande Vitesse (TGV) trains reached 318 km/h on December 8, 1972. Also in France, the "Aerotrain," running on an air cushion and propelled by a gas turbine, set a new world record of 425 km/h in May 1974. In England the diesel-driven High-Speed Train (HST) attained 225 km/h on June 11, 1973. Since the first oil crisis in 1973–1974, efforts to develop high-speed trains have been almost exclusively devoted to electric locomotives, power cars, or magnetic levitation (Maglev) vehicles using electric energy. In the first category, the long-standing record of 331 km/h (from 1955) was finally broken on February 26, 1981, when a French

---

Electro-Motive Division, General Motors Corporation, LaGrange, Ill. 60525.

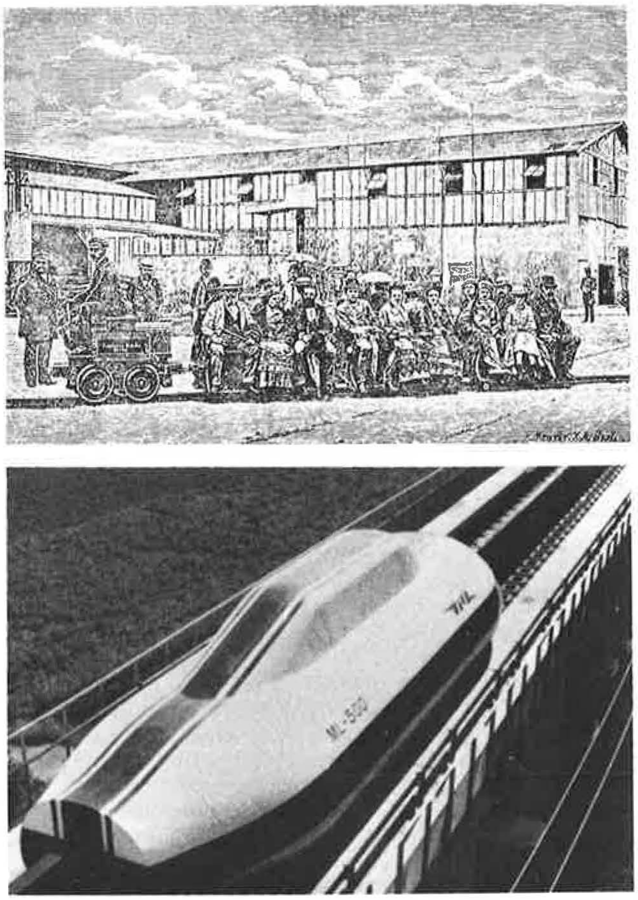

FIGURE 2 A century of progress: May 31, 1879, Berlin, Germany, 13 km/h (*top*) and December 21, 1979, Miyazaki, Japan, 517 km/h (*bottom*).

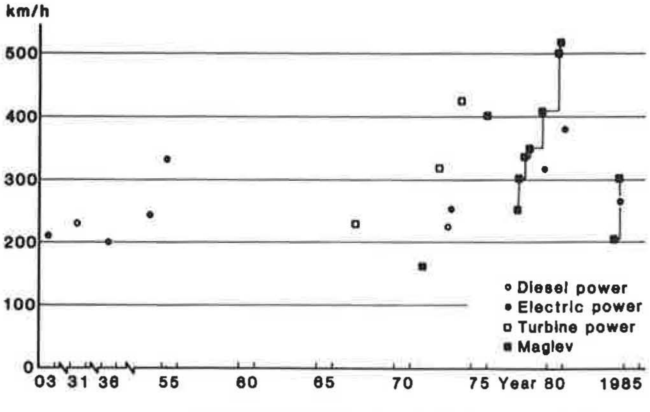

FIGURE 3 Some speed records of guided transportation.

electric TGV train ran at 380 km/h. In the Maglev category, rapid development in Japan of repulsion-type Maglev vehicles resulted in the speed record being increased for the same vehicle (ML 500) from 301 km/h on March 10, 1978, to 517 km/h on December 21, 1979. In Germany, where development of Maglev vehicles is concentrated on the attraction type with a long-stator synchronous motor, a similar attempt to increase maximum speed was begun and then postponed until the Maglev test track in Emsland was completed.

Figure 4 highlights the most important aspects of vehicles for high-speed guided transportation. These aspects can be (and have been) combined for various types of propulsion as will become evident later in this paper. However, before propulsion development is described in detail, some general items such as adhesion, train resistance, power requirements, and body tilting will be discussed.

It is well known that the adhesion between wheel and rail varies considerably depending on physical conditions (such as dry or wet rail) and also that it is affected to a certain extent by vehicle speed, track curvature, and other parameters. A rather typical example follows.

Measurements in Japan, under wet conditions, on a test bed, and in actual service at speeds up to about 250 km/h, resulted in a wide range of adhesion values as shown in Figure 5 (*1*). The Japanese National Railways (JNR), according to Nouvion (*2*), applied as a design rule for their high-speed trains on the Shinkansen network a utilizable adhesion of

$$\mu = \frac{136}{v + 85}$$

where v is vehicle speed measured in kilometers per hour. It should be recognized that all Shinkansen trains so far have used a propulsion system with direct-current traction motors permanently connected in series. This is a condition generally known not to improve the possibilities of utilizing available adhesion between wheel and rail.

Figure 6 shows some rules applied in various countries for the utilization of adhesion. Curve A is generally employed in Central European countries such Germany, Austria, and Switzerland and is the result of numerous running tests up to 160 km/h in 1943 with a German Class 19 electric locomotive. This locomotive had an axle arrangement 1′ Do 1′ with driving wheels 1540 mm in diameter and used parallel-connected alternating-current single-phase commutator-type traction motors. The findings were originally published in 1944, but because many copies were destroyed during the events at the end of World War II, the results were published again in 1950 (*3*). Analytically, the Curtius-Kniffler formula can be written as

$$\mu = \frac{7.5}{v + 44} + 0.161$$

with v expressed in km/h. It should be observed that the results were obtained with a locomotive that had an idle axle at each end.

Curve B is according to Nouvion (*2*) and is the rule applied in France in the 1950s and 1960s for electric locomotives "in normal service without antislip devices."

Curve C shows results of experiments in Germany with trains hauled by the first German electric locomotive geared for 200 km/h (Class 103).

From the late 1960s, the SNCF applied for their electric traction vehicles the design rules (*2*)

$$\mu = 0.24\,\frac{8 + 0.1\,v}{8 + 0.2\,v}$$

Wheeled vehicles on rails

Steam power	Mechanical transmission
Diesel power	Hydraulic transmission
Turbine power	Electric transmission
Electric power	Direct current, single-phase, three-phase

Levitated vehicles

Air cushioned	Short-stator motors
Magnetically levitated	Asynchronous
Repulsion system	Synchronous
Attraction system	Long-stator motors Synchronous

FIGURE 4 Types of vehicles for guided transportation.

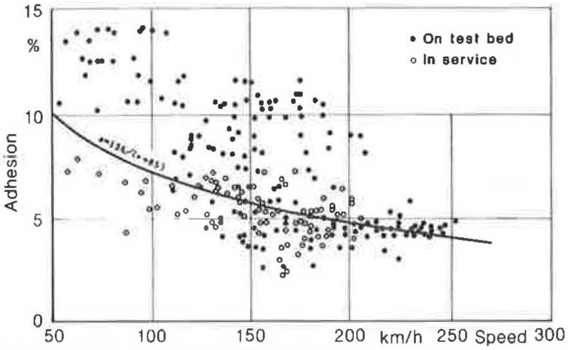

FIGURE 5 Adhesion under wet conditions (Shinkansen).

for individually driven axles and

$$\mu = 0.26 \frac{8 + 0.1\,v}{8 + 0.18\,v}$$

for locomotives with two-axle "monomoteur" trucks. The speed (v) is measured in km/h. These rules were considered valid up to at least 250 km/h.

An adhesion of 10 percent ($\mu = 0.10$) was utilized when the French electric locomotive BB 9004 set a world speed record of 331 km/h on March 29, 1955 (*4*).

To define the propulsion system for a traction vehicle able to run at a specified speed (v), it is necessary to know, in addition to the utilizable adhesion, the total resistance (R) of the train to motion. In free air (no wind) and on level track, it is generally accepted that this total train resistance can be expressed by an equation of the type

$$R = A + Bv + Cv^2$$

where the coefficients A, B, and C are of such magnitude that at very high speeds the term Cv^2 dominates. It is therefore of particular interest to study how the coefficient C depends on various design factors so that means can be found to reduce the value of C and thereby the significant part of total train resistance. Experience has shown that C is practically proportionate to the cross-sectional area of the train and to a factor that takes into account mainly the shape of the leading end (the nose) and the trailing end of the train.

The following table gives the cross sections (expressed in m^2) for some of the high-speed trains to be discussed in detail later:

Train	*Cross Section*	*Reference*
APT prototype	8.05 or 7.8	*5* and *6*
HST	9.12	*5*
ICE	10.3	Calculated
Shinkansen 0	10.4 or 13.35	*7* and *8*
Shinkansen 200	12.5	*7*
TGV 001	9.15	*9*
Class 103 locomotive	10.9	*10*

As mentioned earlier, the cross section alone does not determine the C coefficient. Total aerodynamics must be considered (including shape and degree of protruding trucks). C. J. Baker (*11*) has given the following typical "train drag coefficients" for three of the trains mentioned and a typical British freight train:

Train	*Coefficient*
TGV	1.5
APT prototype	2.05
HST	2.11
British freight train	5 to 15

Figure 7 (*12*) shows the cross sections of some high-speed trains compared with the limiting profile according to the Union Internationale des Chemins de Fer (UIC). The trend toward smaller cross sections for modern trains is evident.

The actual cross section dimensions of the German Inter-City Experimental (ICE) train are shown in Figure 8 (*13*, *14*).

Recent investigations by SNCF in France have shown that a 10 to 14 percent reduction in drag coefficient can be achieved by introducing underbody skirts on high-speed passenger trains (*15*, *16*).

It has been mentioned before that total train resistance R (the resistance of a train in motion in free air and on level track at a speed of v) may be expressed as

$$R = A + Bv + Cv^2$$

The coefficients A, B, and C depend on such parameters as axle load, number of axles, cross section of the train, and shape of the train; their values also depend on the units selected in the preceding equation. In the following, R will be

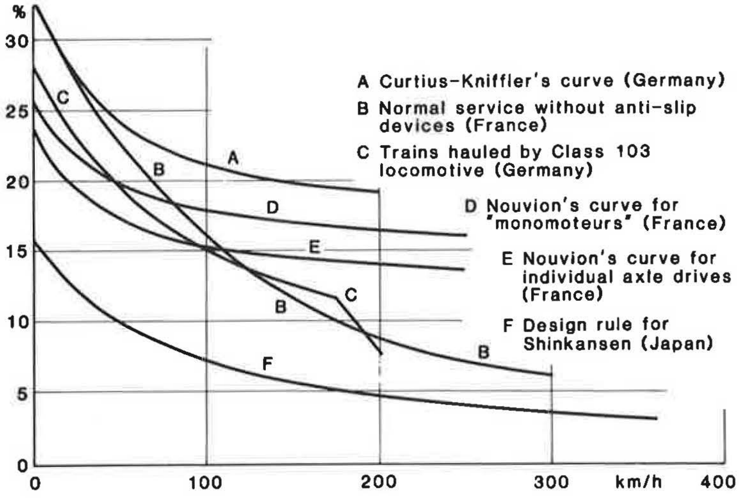

FIGURE 6 Some rules for use of adhesion.

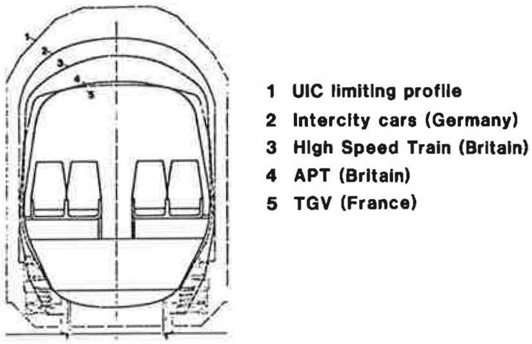

FIGURE 7 Cross sections of some high-speed trains.

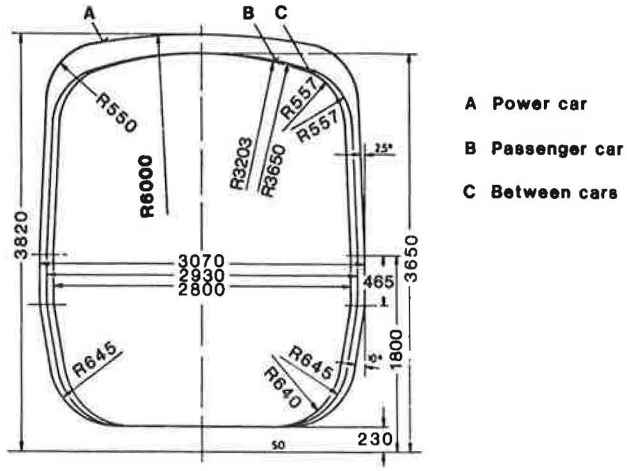

FIGURE 8 Cross section of InterCity Experimental.

expressed in kilonewtons (kN) and v in kilometers per hour (km/h).

Perhaps the most recognized investigation of train resistance of freight and passenger trains in North America is one published in 1926 by W. J. Davis, Jr. (*17*), and the preceding equation is therefore often called Davis' equation. However, the classification of train resistance into three terms, one independent of speed, one proportional to speed, and one proportional to the square of speed, was first proposed in France in 1885. In general, the investigations performed by Davis were limited to speeds not exceeding 145 km/h.

Peters has stated (*18*) that, although the skin frictional drag is not exactly proportional to the square of the vehicle speed, experience has shown that, up to 300 km/h at least, the Cv^2 term expresses quite adequately the aerodynamic resistance, so terms of higher powers of v may be neglected.

Over the years, numerous tests and theoretical investigations have been made to determine the coefficients in this equation for various types of trains. Table 1 gives some results, mainly for trains capable of running at speeds of 200 km/h or more.

Rappenglück (*12*) gives a number of rather general equations for calculating total train resistance as dependent on total mass of train, total length of train, axle load, and some other parameters.

The impact on train resistance of various nose shapes for the Shinkansen trains has been investigated (*26*). The difference in resistance between a "conventional" French passenger train and the TGV Sud-Est is shown in Figure 9.

Tests on models of the experimental German high-speed train R/S-VD (later ICE) for determining components of train resistance are described by Neppert (*27*). The impact of various components on total train resistance of the TGV Sud-Est as a function of speed, particularly at 260 km/h, is shown in Figure 10 (*24*).

When total train resistance is known (adjusted for gradient, impact of wind, tunnels, etc.), the power required for driving the train at a specified speed can be calculated.

In the international system of units, the relationship between force (F), speed (v) (in the direction of the force), and power (P) required can easily be expressed as

$$P = Fv$$

TABLE 1 RESULTS OF TESTS AND INVESTIGATIONS

Train	*A*	*B*	*C*	Reference
SNCF CC 6500 + 10 standard coaches	7.70	0	0.000960	19
JNR 8-unit Sanyo Shinkansen	5.46	0.0705	0.000666	20
SNCF TGV 001	1.04	0.0180	0.000258	9
BR British passenger train with 10 Mk II cars	6.60	0.0111	0.001424	21
BR APT train with 2 power cars and 12 coaches	9.60	0.0447	0.000782	21
SNCF RTG (total of 5 vehicles)	2.07	0.0234	0.000595	22
SNCF BB 16500 + 7 coaches	5.34	0.0355	0.000883	22
SNCF TGV Sud-Est (total of 10 vehicles)	3.90	0.0407	0.000632	22
DB Class 120 + 6 passenger cars	9.30	0.0279	0.001045	23
SNCF TGV Sud-Est	3.82	0.0390	0.000632	24
BR APT train with 2 power cars and 12 coaches	9.78	0.0442	0.000780	12
BR HST (2 power cars + 8 coaches)	2.85	0.0180	0.000772	25
BR APT (2 power cars + 12 coaches)	6.72	0.0270	0.000777	25
SNCF TGV Sud-Est (2 power cars + 8 coaches)	3.90	0.0410	0.000632	25
JNR Shinkansen (total of 12 cars)	7.71	0.1410	0.000982	25
BR British freight train (locomotive + 20 cars)	15.60	0.1530	0.002590	25

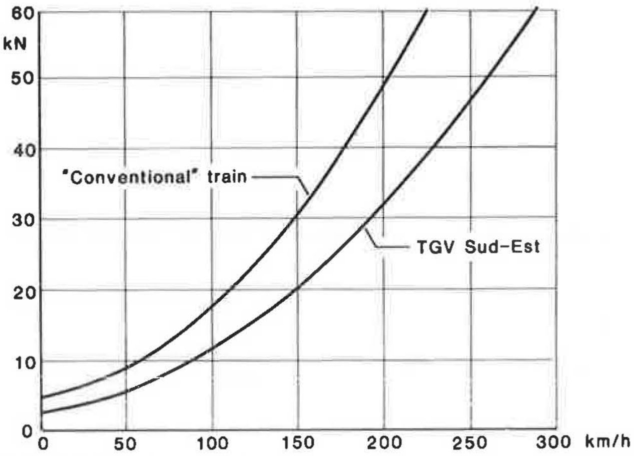

FIGURE 9 Impact of shape on train resistance.

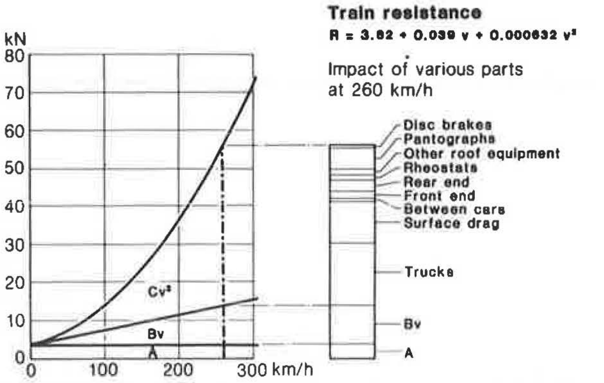

FIGURE 10 TGV Sud-Est.

with *P* in watts, *F* in newtons, and *v* in meters per second. Applying a factor of 1000 to each side yields

$$P \text{ (in kW)} = F \text{ (in kN)} \times v \text{ (in m/sec)}$$

Applying another factor of 1000 to each side yields

$$P \text{ (in MW)} = F \text{ (in kN)} \times v \text{ (in km/sec)}$$

Finally, because 1 hour = 3600 sec, the relationship can be written

$$3600\, P \text{ (in MW)} = F \text{ (in kN)} \times v \text{ (in km/h)}$$

In the case of high-speed trains, *F* corresponds to the tractive effort, *v* to the speed of the train, and *P* to the power required at the wheel-rail interface. This relationship is illustrated by the four hyperbolas in Figure 11. The lower left corner of the figure may be considered a nomogram in which the tractive effort (using the vertical scale) can be obtained at the intersection between a vertical line representing the adhesion weight of the train (total weight on driving axles) and a skew line representing the adhesion coefficient presumed to be available at the driving wheels. When the tractive effort has been found, a horizontal line can be drawn to the right. The hyperbola that intercepts this horizontal line where it crosses the vertical line representing the train speed indicates the power required.

Figure 12 shows some examples of curves representing tractive effort versus speed for some vehicles that have actually been built or at least have been projected. Curve A relates to the German electrical multiple-unit train set ET 403, the first of which was delivered in 1973 (*28*, *29*). Curve B represents the French electric locomotive Class 26000 (Sybic) with three-phase synchronous traction motors and intended for 200-km/h passenger trains as well as for lower-speed freight trains (*30*, *31*). Two prototype locomotives were delivered at the end of 1984, and 44 series-production locomotives have been ordered by SNCF.

Curve C refers to the French high-speed train TGV Atlantique (*31*, *32*), the first 73 sets of which SNCF ordered in 1985. They will run at a maximum speed of 300 km/h and are driven by three-phase synchronous traction motors.

The Class 103 with the characteristic shown in Curve D was the first German electric locomotive projected to run at speeds of 200 km/h. The first prototype was delivered in 1965. As were all main-line electric locomotives in Germany at that time, it was powered by single-phase commutator-type motors (*33*).

A British project for a high-speed train with two power cars and 14 coaches is described by Ford (*34*). The speed in open air would be 300 km/h but in a tunnel only about 190 km/h. Continuous power output is planned to be no less than 10 MW for the train that will be powered by three-phase induction motors. Curve E shows its characteristic.

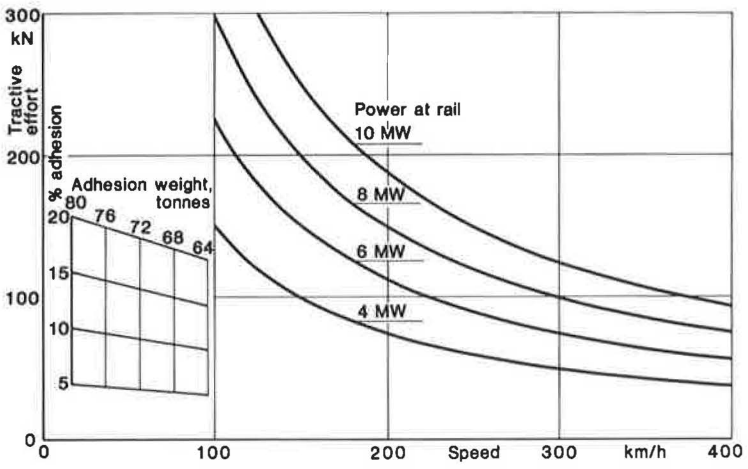

FIGURE 11 Relations among tractive effort, speed, and power at rail.

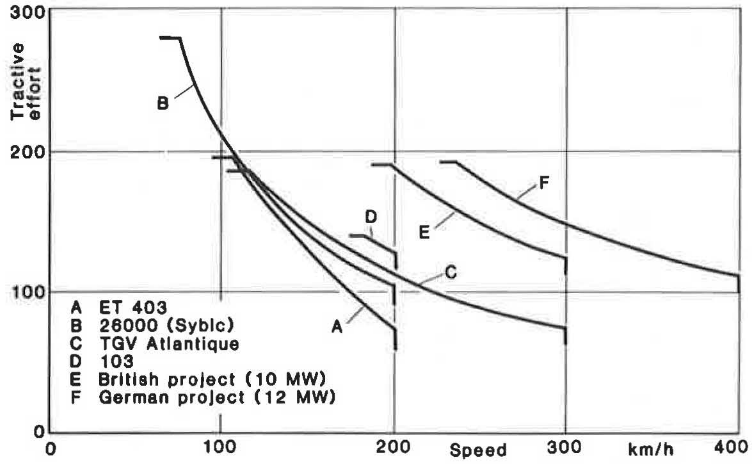

FIGURE 12 Relations among tractive effort, speed, and power at rail for six selected trains.

As early as 1974 a train with 12 driven axles and a total power of 12 MW was being planned in Germany (*35*). Its characteristic is shown by Curve F. The train would be driven by three-phase induction motors with a maximum rotational speed of 4500 r/min and weighing only 1150 kg per motor rated 1000 kW. The axle load would then be limited to 15 tonnes.

Attempts to increase the maximum speed of trains by providing more traction power will result in an appreciable reduction in journey time only if the higher speed can be maintained for long distances. Unfortunately, most of the existing railroad systems are troubled by numerous speed restrictions, mostly due to curvature, and realignment of these curves is usually very costly and may be prohibitively expensive. Therefore, during the last two or three decades, a good deal of effort has been put into endeavors to provide the vehicles themselves with means that would enable them to traverse existing curves at higher speeds than are possible with conventional vehicles.

In general, the maximum speed limit in a curvature (after attention has been paid to safety, risk of derailment, overturning the train, or overloading the outer rail) is determined by considerations of passenger comfort. The main cause of discomfort is unbalanced centrifugal force. Centrifugal force can be countered by superelevation of the track, but the amount of superelevation may be limited by slower trains using the same track or the track having been built at a time when there was no need for the higher speeds considered necessary today.

Attempts were made in the 1950s to counteract excessive centrifugal force on passengers by suspending the carbody in such a way that it could turn around a longitudinal axis above the center of gravity, enabling the body to swing like a pendulum when traversing a curve. Passengers then experience a slight increase in weight but little transverse force. Experiments with natural, passive, or pendular tilt were performed in France (*36*) (Figure 13), Germany, and the United States (on the Chesapeake & Ohio Railroad). This type of tilting was also used on the turbotrains designed by United Aircraft and introduced between New York and Boston and in Canada in 1968.

The early French experiments with tilting vehicles, beginning in 1956, are described elsewhere (*36, 37*) and shown in Figure 13. Tests with assisted tilt demonstrated that it was possible to run a vehicle over a curve with a cant deficiency of up to 300 mm.

In Germany, a diesel multiple-unit train was provided with a tilting mechanism for use when traversing curves; the servo

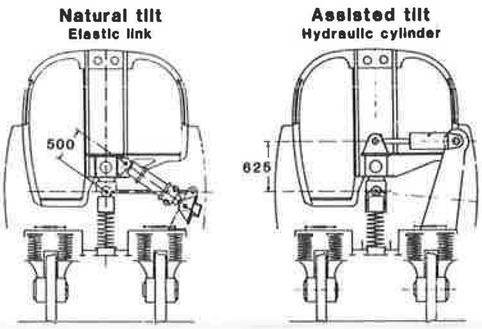

FIGURE 13 French experiments with a tilting coach.

system was arranged so that air bellows supporting the carbody were inflated on the outside of the curve and deflated on r/min inside, thus tilting the body relative to the truck toward the inside of the curve (*38, 39*). In this case the maximum tilt was 4.4 degrees.

In Japan, two experimental nondriving trucks with a pendulum-type suspension were built and tested in 1968 (*40*). After some improvements of the truck had been made, an experimental three-unit narrow-gauge electric train set Kumoha 591 with pendular tilt was built and tested (*41*). The system used for tilting is described in the *Railway Gazette* (*42*) and is based on the body being mounted on rollers giving a relatively high axis of rotation so that no powered tilting is considered necessary. The tilting is limited to 6 degrees. Tests on the Kumoha 591 set are described elsewhere (*43*). A similar pendular tilting system was used for the JNR prototype gas turbine train completed in 1972 (*44*). After 3 years of testing of the Kumoha 591, a design was approved for series production and the first six-car set went into service in 1973. Later, nine-car sets were also built, and the train was reclassified as Series 381.

The idea of tilting the carbody by power controlled by some sort of servomechanism came to the fore in the late 1960s and early 1970s, mainly in Britain, France, Germany, Italy, Japan, Spain, Sweden, and the United States. This type of tilting is called active, assisted, controlled, or powered tilt.

British Railways first introduced the concept of powered tilting on its Advanced Passenger Train (APT) (*42, 45*). One reason was that a pendular nonpowered suspension for tilting the body would inevitably have had a rather long response time. The technique suggested for APT is described elsewhere (*46, 47*) and shown in Figure 14. After many years of difficulties with various versions of tilting equipment for the APT, the project was finally abandoned and most power cars and trailers scrapped in 1986.

In Italy, the State Railways (FS) in 1970 authorized expenditure for building a prototype tilting-body electric train set (*48*) with an intended maximum speed of 250 km/h. The pantograph was to be carried on a framework mounted solidly on the truck, and the coach bodies with their vestibuled connections were to be free to tilt within this framework (*42, 49, 50*) as shown in Figure 15. Testing of the first car began in early 1972. Maximum tilting was 10 degrees. After comprehensive tests on the single car type Y0160, it was decided in 1974 that a four-unit high-speed train with a hydraulically operated tilt control device for a maximum tilt of 10 degrees should be developed. The design is described by Messerschmidt (*51*). The train is designated as ETR 401 and entered public service in July 1976. A similar four-car train set was also built in Spain under license from Fiat and delivered in 1976 (*52*).

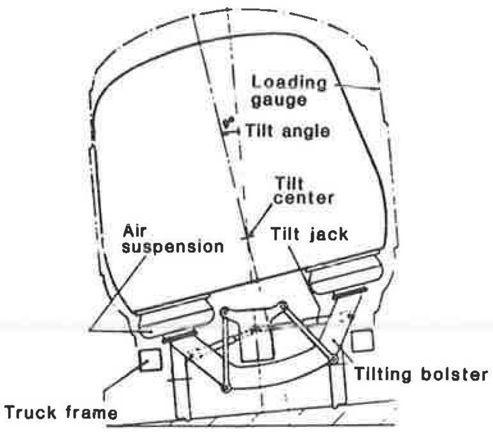

FIGURE 14 Tilting arrangement for prototype APT train.

Recent developments related to the tilting trains ETR 401 and ETR 450 in Italy are discussed elsewhere (*53*). The ETR 450 is designed for a maximum speed of 250 km/h. Fourteen of these trains have been on order since May 1985. The axle load is limited to 12 tonnes.

Experiments with air spring tilting in Sweden started in 1970 using a system in which the centrifugal acceleration in a curve was electronically measured and the corresponding tilting angle monitored. Full reaction time was reported to be 1.5 sec. Since 1973, a development project X15, involving both radial-steering trucks and carbody tilting, has been carried out. The results of this development are described by Nilstam (*54*) and shown in Figure 16. Ford (*55*) makes a comparison between this project and the failed APT in Britain. On the basis of experience gained, the Swedish State Railways in 1986 ordered from ASEA 20 six-car trainsets Class X 2 with a maximum service speed of 200 km/h. These trains will be powered by three-phase induction traction motors; they will use radial steering trucks; and all vehicles in the train, except the power car, will be fitted with a hydraulic tilting system. Maximum tilt will be 6.5 degrees. The X 2 trains are described elsewhere (*56*).

As early as 1949, the American Car & Foundry Company designed and built a demonstration train based on patents owned by the Spanish Tren Articulado Ligero Goicoechea Oriol (TALGO). A TALGO train is characterized by independently rotating wheels, only one pair of wheels at the rear end of each car, a very low point of inertia, extremely low weight, and a link connection between the carbodies. The first trains went into regular service in July 1950 between Madrid and the Spanish-French border and became quite popular. Similar trains were also supplied to the New York–New Haven Railroad in the United States.

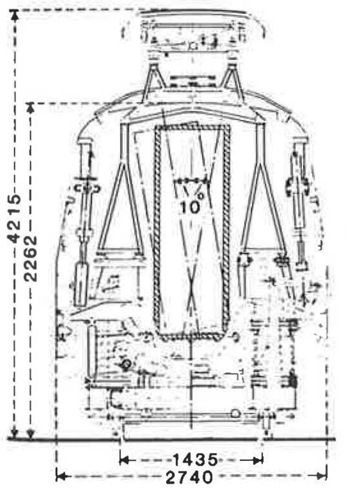

Tilting is carried out by vertical rams between the bolster and the body structure at window level. The body profile is rounded to permit 10° of tilt either way. The pantograph is supported direct from the bolster and does not tilt with the body.

FIGURE 15 Tilting coach for 250 km/h (Italy and Spain).

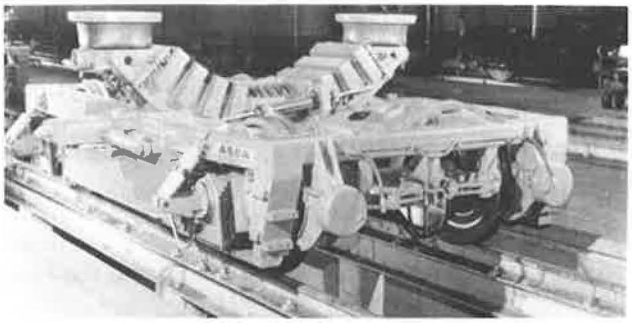

FIGURE 16 Radial steering truck with hydraulic carbody tilting (experimental train X15 in Sweden).

In July 1976, a prototype TALGO trainset with pendular body tilting was delivered in Spain by CAF and Fiat, and tests with speeds up to 200 km/h were performed at the end of 1976. These tests are described by Lumpie (*57*).

A new generation of TALGO trains (Talgo Pendular) was introduced in Spain in 1980 after having been tested at speeds of up to 230 km/h. They are described elsewhere (*58, 59*).

Selected high-speed trains, locomotives, and power cars are described next.

DETAILED DESCRIPTIONS

High-Speed Train (HST) in Britain

In the British Railways Board Report for 1969, two speed ranges to be attained operationally in the next decade were outlined. One was a "high-speed" train operating at 160 to 200 km/h with existing forms of traction and signaling, and the other was a "very high-speed" train to be designed according to the APT concept (*60*). On September 21, 1970, it was first publicly announced that a high-speed diesel-powered train was under development at British Rail's Technical Centre in Derby. A comprehensive description of this HST was published by Janota and Dannatt (*61*). Figures 17 and 18 show the general layout of its diesel-electric power car and a cross section of its mechanical transmission, respectively.

In commercial service, the HST will normally comprise five Mark III passenger coaches, two catering vehicles, and one power car at each end. The nine-car formation has a tare weight of about 365 tonnes. Each power car in service order weighs about 66 tonnes, corresponding to an axle load of 16.5 tonnes. The principal components of an HST power car are described next.

The diesel engine is a 12-cylinder Ruston Paxman Valenta type 12RP200L developing 1678 kW (UIC rating) at 1500 r/min. It drives a combined main/auxiliary three-phase 12-pole alternator rated at a maximum power of 1480 kW in the main part and 313 kW in the auxiliary part. The four frame-mounted direct-current traction motors are each rated 343 kW. They are permanently connected in series-parallel and operate in full field throughout the entire speed range. Alternator and traction motors are made by Brush. Stanier (*62*) and Sephton (*63*) give rather complete reports on the HST.

After the prototype HST had been thoroughly tested, British Rail announced in 1973 that 27 HSTs had been ordered, followed the next year by an order for 32 more. The first production-type HST went into service between London and Bristol on October 4, 1976.

Experience gained with the production trains has been reported elsewhere (*64*). Of particular interest was that fractures started to develop on the production trains (they had not occurred on the prototype). This may be one reason for some of the Valenta engines reportedly being replaced by Mirrlees V12MB190 diesel engines. British Rail currently has a fleet of 95 HSTs.

In March 1980, the New South Wales Public Transport Commission ordered four seven-car trains similar to the HST, but in Australia classified as XPT. They are, however, geared for a maximum speed of 160 km/h instead of 200 km/h as is the case for the HST.

Advanced Passenger Train (APT) in Britain

As mentioned earlier, in the mid-1960s British Rail had already started to investigate a high-performance, lightweight

Maximum speed	**200 km/h**
Diesel engine rating	**1678 kW at 1500 r/min**
Diesel power for traction	**1455 kW**
Wheel diameter	**1020 mm**
Weight of power car	**66 tonnes**

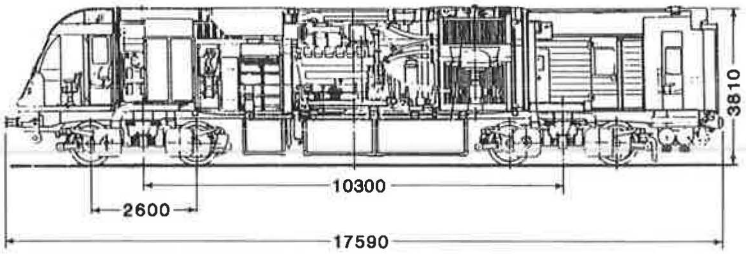

FIGURE 17 Diesel-electric power car for the high-speed train (Britain).

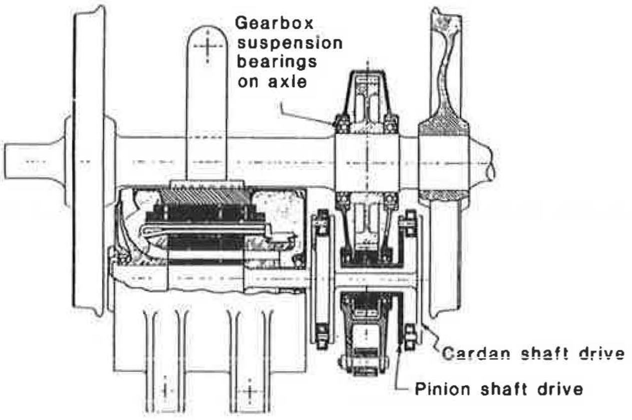

FIGURE 18 Mechanical transmission of HST.

train, later to be named the Advanced Passenger Train. It was intended to be able to run at maximum speeds well above 200 km/h on existing track in Britain, thereby avoiding the considerable costs of major civil engineering reconstruction of track. Some type of power-controlled tilting would be necessary to achieve this. Several types of propulsion were studied, and originally it appeared likely that a rail traction version of an aircraft gas turbine plus a simple mechanical transmission would be chosen for the APT (*65*).

Evaluation of the APT using two skeletal dummy power cars started at Derby early in 1971, and it was decided to build an experimental four-car train to be tested on a track 21 km long (*66*).

Initial trials planned for the experimental version APT-E are described elsewhere (*67*). The APT-E is also discussed in detail by Wickens (*68*) and in *Rail Engineering International* (*69*). The gas-turbine-driven APT-E took to the rails for the first time on July 25, 1972. At the same time, it was decided that detailed design work was to start on the prototype straight electric version APT-P; an order was placed with ASEA for the electric traction equipment for this version.

Gunston (*70*) gives a comprehensive description of the APT-E. Problems with the gas turbines and heat exchangers on the APT-E started almost immediately after completion. Both the gas turbines and the suspension system had to be modified. Some of these problems are described elsewhere (*71*). The tilting problems have also been discussed (*46*).

For a while in the mid-1970s, a degree of optimism returned, and the APT was treated in some detail by Jones (*21*). The APT-E attained 240 km/h on July 27, 1975, and 245 km/h on August 10 the same year. Figure 19 is a picture of this train.

Six power cars for the electric power car version APT-P were in the meantime being built at Derby (*47*). The power transmission is shown in Figure 20 and described elsewhere (*47, 72–74*).

Technical faults continued to plague the APT into the 1980s. The worst affected components were reported to be the tilt system (liable to lock a particular carbody into one position) and the friction brakes (which had a tendency to become applied on one axle only leading to overheating). Criticism of the whole project increased, and it was finally abandoned in 1986.

Light Rapid Comfortable (LRC) Train in Canada

It was announced in June 1969 that a Canadian consortium had started (in 1967) to develop a high-speed lightweight train incorporating many features of the Turbotrain design, but to be powered by diesel engines. The consortium consisted of

FIGURE 19 Advanced Passenger Train in Britain.

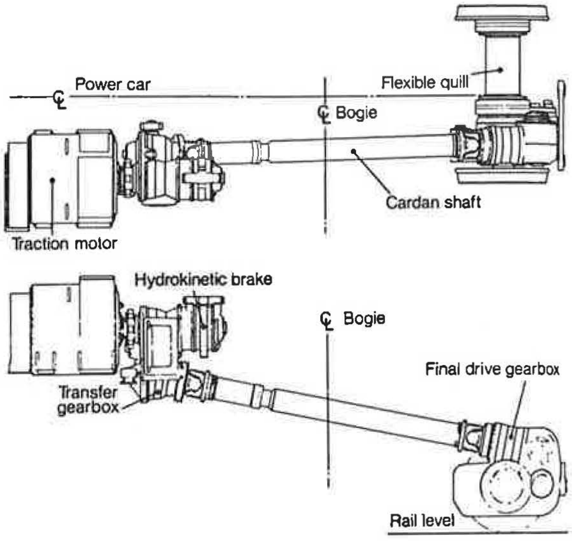

FIGURE 20 APT power transmission.

MLW-Worthington Limited, Alcan Aluminium Limited, and Dominion Foundries & Steel Company.

The LRC is a trainset consisting of either one power car (locomotive) and five coaches, or two power cars (one at each end) with ten coaches between them. The train is designed for a maximum speed of 193 km/h.

A prototype LRC coach was displayed to the public on October 5, 1971 (*75*). Later, a power car was designed and built by MLW Industries (*76–78*). At the end of 1974 the power car and the coach were tested at Pueblo where they reached an average speed of 156 km/h during a 1762-km test. They then entered service between Toronto and Sarnia on March 3, 1975. A Canadian train speed record was set on March 10 of that year when the LRC reached 205 km/h (*79*).

Late in 1977, the Canadian government ordered for VIA Rail 22 LRC power cars and 50 coaches from Bombardier-MLW.

Amtrak decided to lease two LRC trainsets, each consisting of one power car and five coaches, and both had entered service by the end of October 1980. However, Amtrak decided in the middle of 1982 not to use them further and returned them to Canada. This coincided with VIA Rail's ordering 10 more LRC trainsets. The first ones had been in revenue service between Montreal and Toronto since October 25, 1981.

Rather comprehensive descriptions of the LRC trains are available elsewhere (*80, 81*). The main dimensions of the power car are shown in Figure 21. Characteristic particulars are described next.

The power car is geared for a maximum speed of 193 km/h, and the continuous power at rail is 1492 kW. The total length over couplers is 19 406 mm, the truck wheelbase is 2896 mm, and the wheel diameter is 1016 mm (new). A power car weighs 99 tonnes. It has a low profile, a low center of gravity, and a front end designed for low air resistance. Its cross section is only 9.57 m^2. The underframe is designed with a depressed box for accommodating the diesel engine. The fuel tank has a capacity of 7272 liters. There is no provision for tilting of this carbody.

The diesel engine (one per power car) has a gross power rating of 2163 kW and delivers 1715 kW for traction to the three-phase alternator at a constant speed of 900 r/min (idling speed is 400 r/min). It is an MLW series 251 turbocharged four-stroke, 12-cylinder Vee engine with a bore of 228.6 mm and a stroke of 266.7 mm. Cylinder blocks, cylinder heads, and the turbocharger are water cooled.

The output from the main alternator is rectified by diodes and supplied to four axle-hung direct-current traction motors made by Canadian General Electric.

Each coach has a length over couplers of 25 908 mm and a weight (with 75 percent passenger loading) of about 42 tonnes. It is provided with Dofasco's hydraulic system for tilting the coach body up to a maximum of 10 degrees of which usually only 8.5 degrees are utilized.

Traction Vehicles Powered by Gas Turbines (some in combination with diesel engines)

Attempts to use gas turbines in traction applications started in the 1930s. It was reported in 1947 (*82*) that, at that time, 21 different organizations were known to be supporting

Maximum speed	**193 km/h**
Diesel engine rating	**2163 kW**
Diesel power for traction	**1715 kW**
Wheel diameter	**1016 mm**
Weight of power car	**99 tonnes**

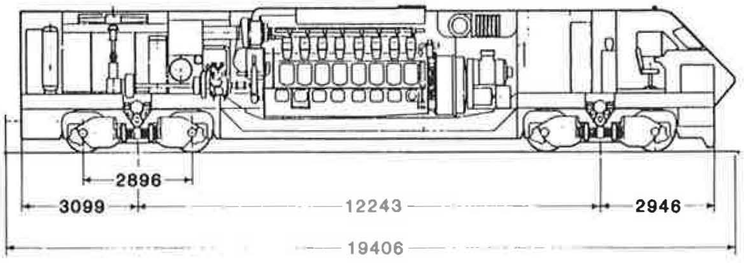

FIGURE 21 LRC diesel-electric power car.

development of gas turbine locomotives. Especially in the United States this development was directed toward both oil- and coal-burning turbines, but the locomotives envisioned (although some were intended for passenger services) had maximum speeds far below those addressed in this paper.

Brown Boveri in Switzerland built a 1640-kW oil-fired gas turbine locomotive in 1941 and followed up this pioneering work in the mid-1940s with a 2982-kW DoDo gas turbine–electric unit. In October 1946, Britain's Great Western Railway (now British Railways' Western Region) ordered from Brown Boveri and SLM a gas turbine locomotive, number 18000, with a continuous power from the turbine at the generator coupling of 1864 kW. It was delivered early in 1950 (*83*). The maximum speed of the locomotive was 145 km/h. The rotational speed of the turbine was 5800 r/min and that of the generator 875 r/min. The axle arrangement was (A1A) (A1A).

The second locomotive of this type in Britain was delivered to BR by Metropolitan-Vickers early in 1952 (*84*). It was a CoCo locomotive also geared for a maximum speed of 145 km/h and was powered by a Metropolitan-Vickers open-cycle gas turbine rated 2237 kW at 7000 r/min and driving three main generators running at 1600 r/min.

An attempt by BR to burn coal in a gas turbine locomotive with a direct mechanical transmission for low speed (80 km/h) appears to have failed in 1954, and it was not until 1967 that BR announced new interest in gas turbine traction (*85*)—the projected Advanced Passenger Train in its first version. It was to use an oil-burning gas turbine and hydraulic tilting of the coach bodies to attain a planned maximum speed of about 240 km/h. The APT project was finally abandoned in 1986 for a number of reasons. A rather comprehensive description of the experimental APT-E train is given by Wickens (*68*).

In Germany, the Deutsche Bundesbahn (DB) initiated studies on the feasibility of using gas turbines for railroad traction in 1963, but at the beginning they thought mainly in terms of a combined diesel and gas turbine system (CODAG) with a small gas turbine providing boost for rapid acceleration and gradient ascents. Such a locomotive, V 169, was built and completed in May 1965 (*86–88*). This locomotive used a Maybach 16-cylinder Vee-type diesel engine model MD 870 rated 1603 kW at 1600 r/min for main traction and, in addition, a General Electric two-shaft gas turbine model LM 100 rated 671 kW. Power was transmitted to all four axles of the locomotive through a Voith hydraulic gearbox with two torque converters. The maximum speed of the V 169 (later renamed Class 219) was only 130 km/h, but the basic concept was so successful that DB ordered eight locomotives of an improved version, Class 210 (*89*). The first of these was delivered at the end of 1970. Main traction was provided by an MTU diesel engine model MA12V956TB rated 1864 kW at 1500 r/min boosted by an AVCO Lycoming gas turbine model T53-L 13 with a continuous rating of 742 to 913 kW depending on altitude and environmental temperature.

The next move of DB was to order three power cars Class VT 602 (*90–94*), with gas turbines as prime movers, intended for a maximum speed of 160 km/h. The turbine was an AVCO Lycoming model TF35 with a continuous rating of 1864 kW replacing the 820-kW diesel engine previously installed in this type of power car. However, fuel consumption and maintenance cost did not meet DB's expectations, and DB decided in 1978 to abandon all attempts to use gas turbines for rail traction.

In January 1966, the U.S. Department of Commerce awarded a contract to United Aircraft Corporation (UAC) for the development of two gas-turbine-powered trainsets, each consisting of three articulated cars. Propulsion was to be accomplished by specially modified Pratt & Whitney Aircraft model ST-6B turbines, and the cars were to have a pendulum suspension system enabling their bodies to tilt (*95*). The Canadian National Railways (CNR) became interested but preferred a longer trainset (seven cars). Both trains are described elsewhere (*96, 97*). During tests in New England at the end of 1967, the first Turbotrain attained a speed of 275 km/h. The three-car trains for the New Haven Railroad had a total power of 2035 kW; the seven-car trains for CNR had a power of 1193 kW. The Canadian Turbotrains entered service in December 1968 but had to be withdrawn after only a few weeks because of severe weather conditions. The first Turbotrain in New England entered service on April 8, 1969.

Although the Turbotrains also encountered a number of problems in the United States, the U.S. Department of Transportation, in January 1971, signed a new contract with UAC for the production of four additional Turbotrain cars. On January 29, 1973, the department announced that it had ended its sponsorship of the Turbotrain demonstration and turned the program over to Amtrak. The two trains used in the U.S. demonstration had been acquired by Amtrak for continued use. Almost at the same time, Amtrak decided to lease from France two gas-turbine-powered trains of the RTG class (*98*).

Rohr Corporation was granted a license by ANF Frangeco to build RTG Turbotrains in North America. In July 1974, financing was approved for Amtrak to buy seven trainsets of the RTG design. In the United States these trains have been named Turboliners (*99*). The first of the seven Turboliners ordered from Rohr went into service between New York and Buffalo in September 1976. Amtrak decided early in 1980 to sell the three trouble-plagued UAC Turbotrains "for the best possible price." VIA Rail in Canada withdrew its remaining Turbotrains from service on October 31, 1982.

In 1967 a project for fundamental research on the suitability of gas turbine propulsion for high-speed trains started in Japan. The following year a gas turbine was installed in an obsolete diesel railcar that was then run on a test track. Results were encouraging, and tests continued on Japan's narrow-gauge (1067-mm) main-line tracks at speeds of up to 130 km/h (*100*). The turbine had an output of 746 kW at 15 000 r/min. A mechanical transmission with a total gear ratio of 1:17.94 was used. Later, two different turbines (*101*) were tested. After the successful conclusion of these tests, the JNR ordered, in 1971, a three-car gas-turbine-powered train (*43, 44, 102*). The prototype unit was completed in March 1972. The gas turbine used could be either an Ishikawajima model IM 100-IR rated 783 kW at 21 300 r/min or a Kawasaki model KTF-14 rated 761 kW at 18 500 r/min. A number of these trainsets are now in service in Japan.

As early as 1966, the French National Railways (SNCF) decided to seriously look at the idea of using gas turbines for rail traction (*103*). An experimental vehicle TGS (Turbine à Gaz Special) was built and tested in 1967. An order was placed in 1968 for 10 turbine trains ETG (Element automoteur à Turbine à Gaz), and these were tested in 1969 and entered revenue service in 1970. Also in 1970, the first six Rame à Turbine à Gaz (RTG) trains were ordered, and they went into commercial service in 1972. The first turbine train for very high speed, the Très Grande Vitesse (TGV) 001 was delivered in 1971.

It appears to be fair to state that, in the early 1970s, France had become the acknowledged pioneer of gas turbine traction for high-speed trainsets. Therefore the French vehicles briefly mentioned previously will be described in somewhat more detail.

The TGS was the result of rebuilding a standard diesel-driven two-car trainset X4300/X4500. One of the cars retained its Poyaud diesel engine rated 330 kW, and a gas turbine drive Turmo III C3 from the Turbomeca Company was installed in the other car. It had a rated output of 820 kW. Numerous high-speed tests were performed with the TGS from April 1967 until December 1972. The maximum speed attained (with an experimental turbine Turmo X) was 252 km/h on October 19, 1971. After conclusion of the tests, the TGS was converted into a trainset for party excursions.

The first 10 ETGs were ordered by SNCF in July 1968 as a result of the successful tests on the TGS. Each ETG consists of four cars: at one end a diesel-powered rail car, at the other end a gas-turbine-powered rail car, and, in between, two non-powered coaches, all permanently connected. The train is designed for a maximum speed of 180 km/h. The turbine used on the ETG is Turbomeca model Turmo IIIF, which is a direct development from a turbine used for a French helicopter. It is a two-shaft turbine, which makes it possible to reduce fuel consumption at partial load in comparison with what it would be for a single-shaft turbine. In this application, the output rotating speed of the turbine is 5700 r/min and the power is limited to 820 kW. The power is transmitted to the wheels through a Voith L411rU hydraulic transmission. The ETG trains are described elsewhere (*104–108*).

The RTG trains (Figure 22) (*106, 109–111*) are designed for a maximum speed of 200 km/h and are powered only by gas turbines. Each train consists of a power car at each end and three intermediate nonpowered coaches. There is one Turbomeca Turmo IIIF gas turbine, which drives the wheels through a Voith hydraulic transmission, in each power car. The first RTG train was delivered on December 1, 1972. The trainset RTG01 was equipped with a special high-speed gear and attained a speed of 260 km/h on January 22, 1974. The RTGs are the base for the Turboliners in the United States (Figure 23) and also for turbine trains delivered to Iran and Egypt.

The experimental gas-turbine-powered train TGV 001 was ordered in July 1969 and delivered in April 1972. It is made up of five cars mounted on six trucks. The end cars each incorporate a driving cab and house the power equipment. The TGV 001 has much better streamlining than the ETG and the RTG, is lower, and has a center of gravity 300 mm lower. In each power car there is a pair of Turmo IIIG gas turbines side by side, which together drive a single alternator through reduction gears. Silicon rectifiers supply power to the direct-current traction motors on the driven axles. The Turmo IIIG is rated at 940 kW per unit. The traction motors are self-ventilated, compensated, and compound wound, and are rated 310 kW continuously with a maximum rotational speed of 3000 r/min.

Maximum speed	**200 km/h**
Main turbine power rating	**2200 kW per train at 20480 r/min**
Hydraulic transmission	**Voith L 411**

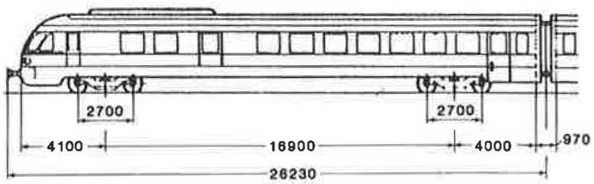

FIGURE 22 Power car of the RTG turbotrain (France).

FIGURE 23 Gas-turbine trainset Turboliner (United States): maximum speed 200 km/h, rated turbine power 1700 kW.

The TGV 001 is shown in Figure 24 and described elsewhere (*112–117*). On December 8, 1972, it reached a maximum speed of 318 km/h.

Figure 25 shows cross sections of some gas turbines intended for rail traction applications. The development of such gas turbines is described elsewhere (*118–120*).

The high-speed vehicles described so far have all, except the APT-P, used a thermal prime mover mounted on the vehicle. However, a vast majority of high-speed trains today get electric power from a catenary. They can be trains hauled by electric locomotives, power cars, or multiple-unit trains in which all, or practically all, axles are driven. Some selected examples of such trains that are designed for maximum speeds of at least 200 km/h are discussed next.

In the early 1960s France already had four different classes of electric locomotives capable of running in regular service at these high speeds (*2, 121*). Also in the early 1960s, locomotive-hauled high-speed trains appeared to be the preference in Germany, Italy, and the USSR; Japan favored multiple-unit trains of the Shinkansen type.

Maximum train speed	300 km/h
Turbine power rating	4 x 1100 kW at 20800 r/min
Alternator rating	2 x 2250 kW at 4000 r/min
Traction motor rating	12 x 310 kW at max. 3000 r/min
Wheel diameter (new)	900 mm
Maximum axle load	16 tonnes

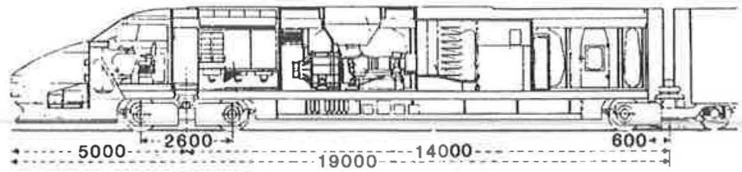

FIGURE 24 Power car of articulated train TGV 001 (gas turbines, alternators, direct-current traction motors).

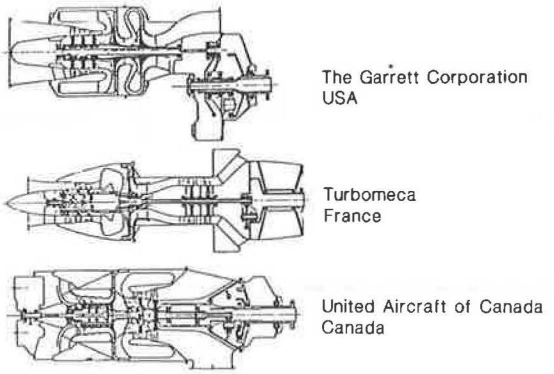

FIGURE 25 Gas turbines for traction.

Electric Locomotive Class 103 (Germany)

In 1962 the German Federal Railway (DB) awarded a contract for four prototype locomotives of a new type (now named Class 103) able to haul trains at a maximum speed of 200 km/h. The first of these locomotives ran in scheduled service between Munich and Augsburg in the summer of 1965. Later 145 series-production locomotives were ordered with deliveries from 1970 on. Siemens had responsibility for the electrical part, Thyssen-Henschel for the mechanical part.

Class 103 is in many respects a further development of the older Class 110; it has a CoCo axle arrangement and is geared for a maximum speed of 200 km/h. The continuous power at rail is 7080 kW according to International Electrotechnical Commission rules. Power supply is from 15 kV at 16⅔ Hz. The weight of the locomotive in working order is 114 tonnes, corresponding to an axle load of 19 tonnes. The transformer has a continuous rating of 6250 kVA and uses a 39-step high-voltage tap-changer. The spring-suspended 12-pole single-phase commutator motors are each rated 1240 kW continuously at 645 V and 1518 r/min. The wheel diameter (new) is 1250 mm and the gear ratio 1:1.74. The principal dimensions of the locomotive are shown in Figure 26 and general descriptions are given elsewhere (*33, 122–124*).

Electric Locomotive Class E 444 (Italy)

Four prototype locomotives, E 444.001 through E 444.004, with a maximum speed of 180 km/h were delivered from Savigliano in 1967. The Italian Railways (FS) then ordered series production of 113 locomotives with a maximum speed of 200 km/h. The first of these locomotives were delivered in 1970. They all originally had resistance control and field-weakening in steps. In 1975 locomotive E 444.005 was modified for chopper control.

The E 444 is a BoBo locomotive geared for a maximum speed of 225 km/h although only 200 km/h is utilized in service. The continuous power at rail is 3760 kW and power supply is from 3-kV DC. The weight of the locomotive in working order is 81 tonnes, corresponding to an axle load of 20.3 tonnes. The axle-hung direct-current traction motors of model T750 have six series-wound main poles, six interpoles, and a compensation winding. The wheel diameter (new) is 1250 mm and the gear ratio is 40:77 = 1:1.925. The principal dimensions of the locomotive are shown in Figure 27 and general descriptions are given elsewhere (*125–130*).

Electric Locomotive Class ChS200 (USSR)

After the end of World War II, the USSR decided to build domestically electric locomotives for freight transportation only. Electric locomotives for passenger services were imported mainly from the Czechoslovakian manufacturer Skoda. From 1958 to 1972, Skoda delivered to the USSR at least 944 locomotives of Class ChS2 (including those with resistance braking, ChS2T). These CoCo locomotives for 3-kV DC, as well as the corresponding locomotives ChS4 and ChS4T for 25 kV at 50 Hz, were designed for a maximum speed of 160 km/h and, of course, for the Russian broad gauge of 1524 mm. For further development, with a maximum speed of 200 km/h, it was decided in 1973 to build locomotive consists with a total of eight axles, BoBo + BoBo, of the new Class ChS200. Skoda delivered the first two consists in 1975 and since then has delivered at least 20 more, half of them geared for 200 km/h, half for 160 km/h. Further developments of the ChS200, all for a maximum speed of 160 km/h, are the Classes ChS6, ChS7, and ChS8.

The ChS200 is a BoBo + BoBo consist designed for 200 km/h with a continuous power at rail of 8000 kW. Power supply is from 3-kV DC. The weight of the consist is 152 tonnes, corresponding to an axle load of 19 tonnes. The fully suspended direct-current series-wound traction motors are of Skoda's type AL 4741 FIT. The wheel diameter (new) is 1250

Maximum speed	**200 km/h**
Rated output	**7080 kW**
Power supply	**15 kV, 16 2/3 Hz**
Weight of locomotive	**114 tonnes**

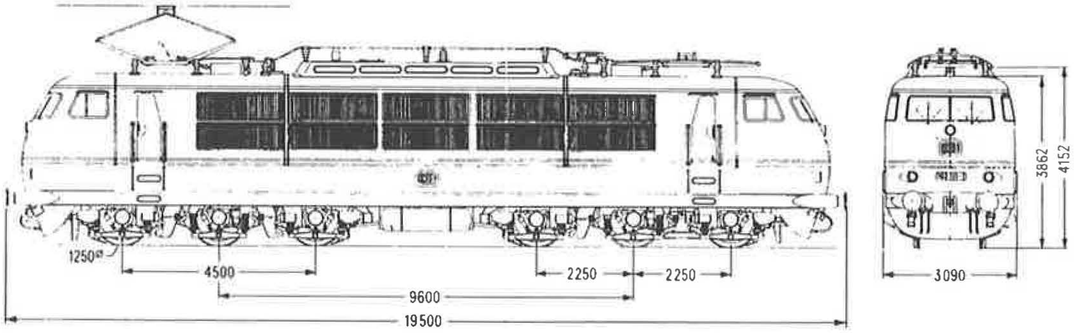

FIGURE 26 Electric locomotive Class 103 (Germany).

Maximum speed	**225 km/h**
Continuous power	**3760 kW**
Power supply	**3000 volts dc**
Weight of locomotive	**81 tonnes**

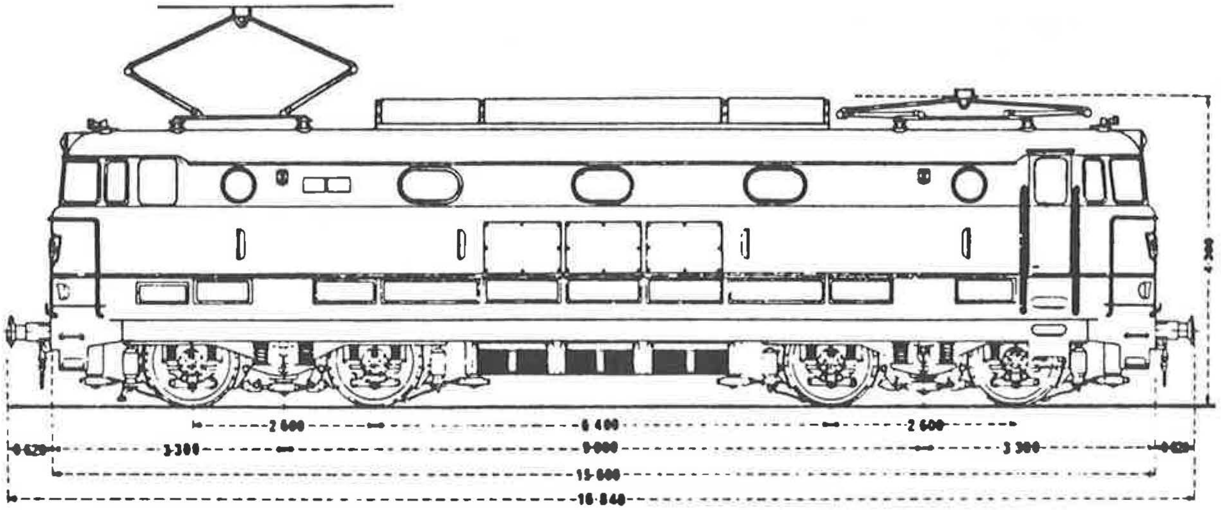

FIGURE 27 Electric locomotive Class E 444 (Italy).

mm. The principal dimensions of the consist are shown in Figure 28, and some details about it are given elsewhere (*131–133*).

Electric Locomotive Class 120 (Germany)

The first high-power electric locomotive with three-phase traction motors, Class 120, was delivered in May 1979 as one of five prototypes. After extensive testing of all five prototypes and some design modifications, the German Federal Railway placed, in November 1984, an order for 60 series-produced locomotives. Four of the prototypes were geared for 160 km/h and one for 200 km/h. Of the 60 locomotives now on order, 36 will be geared for 200 km/h and 24 for 250 km/h.

Class 120 is a BoBo locomotive with a continuous power at rail of 5600 kW. Power supply is from 15 kV at 16⅔ Hz. The weight of the locomotive in working order is 84 tonnes, corresponding to an axle load of 21 tonnes. The transformer has a continuous rating of 5525 kVA. Power is monitored by a control system including rectifier and DC link and voltage source inverters, in which the DC link voltage is 2800 V. The four three-phase induction-type traction motors have a continuous rating of 1400 kW and weigh only 2380 kg. Their maximum rotational speed is 3600 r/min. The wheel diameter (new) is 1250 mm. Four of the prototype locomotives have a gear ratio of 22:106 = 1:4.82; one has a gear ratio of 25:103 = 1:4.12. With half-worn wheels (diameter = 1210 mm) and a maximum rotational speed of 3600 r/min for the traction motors, these gear ratios correspond to locomotive speeds of about 170 km/h and 200 km/h, respectively. The locomotive with the 25:103 gear ratio, in combination with a rotor designed for a maximum rotational speed of 4225 r/min, was tested at speeds of up to 265 km/h on October 17, 1984,

Maximum speed	**200 km/h**
Continuous power	**8000 kW**
Power supply	**3000 volts dc**
Weight of consist	**152 tonnes**
Track gauge	**1524 mm**

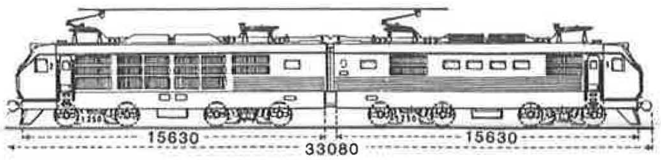

FIGURE 28 Electric locomotive consist Class ChS200 (USSR).

Maximum speed	**200 km/h**
Continuous power	**5600 kW**
Power supply	**15 kV, 16 2/3 Hz**

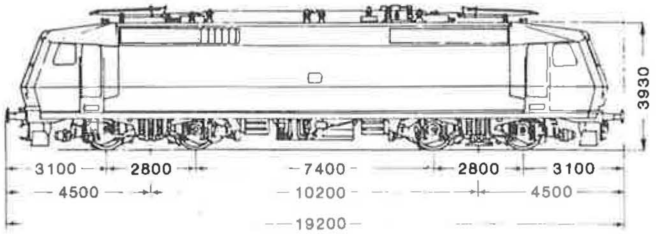

FIGURE 29 Electric locomotive Class 120 (Germany) with three-phase asynchronous traction motors.

and a maximum speed of 280 km/h should be possible. The principal dimensions of the Class 120 locomotive are shown in Figure 29, and descriptions of design and tests are given elsewhere (*134–138*).

Electric Locomotive Class AEM 7 (United States)

In 1975 and 1976 Amtrak decided to lease two European-built electric locomotives to be tried out in the Northeast Corridor. The choice fell on a modified Rc 4 locomotive from ASEA of Sweden and a modified CC 21000 locomotive from Alsthom-Atlantique and Francorail-MTE in France. The principal data on these modified locomotives are as follows:

Amtrak designation	X995	X996
Original designation	Rc 4	CC 21003
Axle arrangement	BoBo	CC
Weight (tonnes)	78	132
Axle load (tonnes)	19.5	22.0
Wheel diameter (mm)	1300	1140
Power at rail (kW)	4000	5760
Length (mm)	15 530	20 550
Truck wheel base (mm)	2700	3216

After 3 months of testing the X996 in 1977, Amtrak concluded that a fair test of the locomotive's capabilities could not be made over the poor track that then existed in much of the Northeast Corridor. Accordingly, the lease for testing this "monomoteur" locomotive was terminated. The X995 successfully completed an extended testing period.

Early in 1978, Amtrak placed an order for the first eight new electric locomotives for the Northeast Corridor, now designated AEM 7. This order was later followed by orders for 39 additional locomotives, bringing the total for Amtrak to 47. The first locomotive was delivered in December 1979. Because of Amtrak's request that the locomotive be able to run on three different catenary systems, 11 kV at 25 Hz, 12.5 kV at 60 Hz, and 25 kV at 60 Hz, a number of modifications were necessary relative to the X995. The principal parameters of the AEM 7 are as follows:

Maximum speed	200 km/h
Continuous power	4320 kW at rail
Weight	91 tonnes
Axle load	22.8 tonnes

The traction motors of ASEA's type LJH 108-5 are separately excited compensated direct-current motors. The wheel diameter (new) is 1300 mm and the gear ratio is 36:85 = 1:2.36. The principal dimensions of the AEM 7 locomotive are shown in Figure 30 and descriptions of the locomotive are given elsewhere (*139–142*).

Electric Locomotive Class 89 (Britain)

In 1983 British Rail ordered a prototype Class 89 electric locomotive from Brush. It was originally intended as a standard passenger locomotive for the East Coast main line in Britain and was specified to be able to run at a maximum speed of 200 km/h. Later developments—especially the request for even higher speeds on many main routes in Britain and on the European continent—have made it less and less likely that the prototype locomotive (which was completed in 1986) will be followed by a series production.

The Class 89 locomotive is geared for a maximum speed of 200 km/h and has a CoCo axle arrangement and a continuous power at rail of 4350 kW. Power supply is from 25 kV at 50 Hz. The weight of the locomotive in working order is 105 tonnes, corresponding to an axle load of 17.5 tonnes. The main transformer is rated at 6368 kVA. Four secondary transformer windings feed banks of thyristors with phase-angle control that, in turn, supply the direct-current traction motors. The principal dimensions of Class 89 are shown in Figure 31 and brief descriptions are given elsewhere (*143, 144*).

Electric "Sybic" Locomotive Class 26000 (France)

Three-phase traction drives can be either asynchronous (induction type) or synchronous. To enable a direct comparison to be made, in 1979 the French National Railways (SNCF) asked two groups of electrical engineering manufacturers to equip each locomotive with their preference of three-phase drive.

In February 1982 tests were begun on the first locomotive (originally BB 15055 but renamed BB 10004), now fitted with two synchronous traction motors of the monomoteur type by Jeumont-Schneider and MTE. The second locomotive, formerly BB 7003 but renamed BB 10003, was placed on a pair of new trucks, thus becoming a BoBo, and was fitted with four induction-type traction motors by Alsthom-Atlantique. Because of several problems, no road tests were begun of the BB 10003 until January 1985. In the meantime, successful

Maximum speed	**200 km/h**
Continuous power	**4320 kW**
Power supply	**11 kV, 25 Hz: 12.5 or 25 kV, 60 Hz**
Weight of locomotive	**91 tonnes**

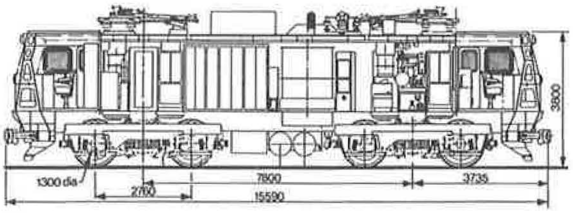

FIGURE 30 Electric locomotive Class AEM 7 (United States).

Maximum speed	**200 km/h**
Continuous power	**4350 kW**
Power supply	**25 kV, 50 Hz**
Weight of locomotive	**105 tonnes**

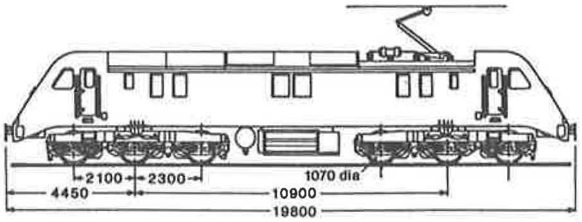

FIGURE 31 Electric locomotive Class 89 (Britain).

tests with the BB 10004 caused the SNCF to favor synchronous motor propulsion at least for the near future. Based on the electrical equipment of the BB 10004 but further developed to enable the locomotive to operate on both 25-kV, 50-Hz, and 1500-V DC catenaries, two prototype locomotives, BB 20011 and BB 20012, were built and handed over to SNCF for tests early in 1985. These locomotives have been called Sybic locomotives (from synchrone and bicourant). On July 23, 1984, SNCF ordered from Alsthom and Francorail a first batch of 44 Sybic locomotives, officially designated Class 26000.

Class 26000 is a BB locomotive geared for a maximum speed of 200 km/h. The continuous power at rail is 5600 kW and power supply can be 25-kV, 50-Hz, or 1500-V DC. The weight of the locomotive in working order is 90 tonnes, corresponding to an axle load of 22.5 tonnes. The body-mounted synchronous traction motors each have eight poles and two displaced three-phase stator windings. Their maximum rotational speed is 1980 r/min, and the continuous rating per motor of 2800 kW can be attained over a speed range of from 40 to 100 percent of maximum speed. The wheel diameter is 1250 mm and the gear ratio 33:73 = 1:2.21.

The principal layout of the prototype Sybic locomotives and a drawing of a series-produced locomotive are shown in Figures 32 and 33, respectively. Descriptions of the locomotives that led up to the Sybic are given elsewhere (*30, 31, 145–150*).

Electric Locomotive Class E 402 (Italy)

All main-line railroad electrification in Italy (except the island of Sardinia) is currently operating from 3000-V DC, and

Maximum speed	**200 km/h**
Continuous power	**5600 kW**
Power supply	**25 kV,50 Hz or 1500 volts dc**

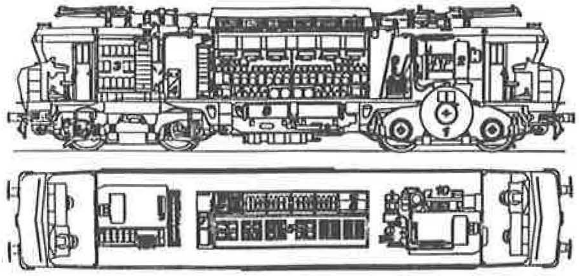

FIGURE 32 Prototype BB 10004 locomotive (France).

Maximum speed	200 km/h
Continuous power	5600 kW
Power supply	25 kV, 50 Hz, or 1500 volts dc
Weight of locomotive	90 tonnes
Tractive effort at start	320 kN

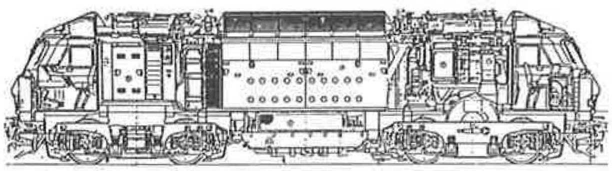

FIGURE 33 Electric dual-system Sybic locomotive Class 26000 (France) with three-phase synchronous motors.

traditionally the traction motors have been conventional direct-current motors with 1500 V per armature, permanently connected two in series. With increasing demand for higher speeds and more powerful traction vehicles for speeds exceeding 200 km/h on the soon-to-be-completed Direttissima line between Rome and Florence, it has been found necessary to introduce three-phase propulsion.

Early in 1984, the Italian State Railways (FS) ordered trucks and three-phase traction motors from Ansaldo Trasporti for its prototype Class E 402 locomotive, and later an order was placed for five complete locomotives of this class. A prototype was completed in 1986 and is undergoing tests. Little information about the E 402 is available yet, but it is designed for a maximum speed of 220 km/h and has already been tested up to 230 km/h. It has a BoBo axle arrangement and the power at rail is specified to be 6000 kW for at least 20 min. The weight in working order is not to exceed 80 tonnes, corresponding to an axle load of 20 tonnes. The four traction motors are of the asynchronous type. A principal layout of the E 402 is shown in Figure 34.

Electric Locomotive Class 91 (Britain)

In 1984 locomotive manufacturers in several countries were invited by British Rail to submit outline proposals for an electric locomotive intended to haul BR's next generation of intercity trains at speeds of up to 225 km/h. The power at rail had to be in excess of 4000 kW and the traction motors were specified to be body mounted. Axle load was maximized to 20

Maximum speed	220 km/h
Power at rail	5600 kW cont.; 6000 kW, 20 minutes
Power supply	3000 volts dc
Weight of locomotive	82 tonnes

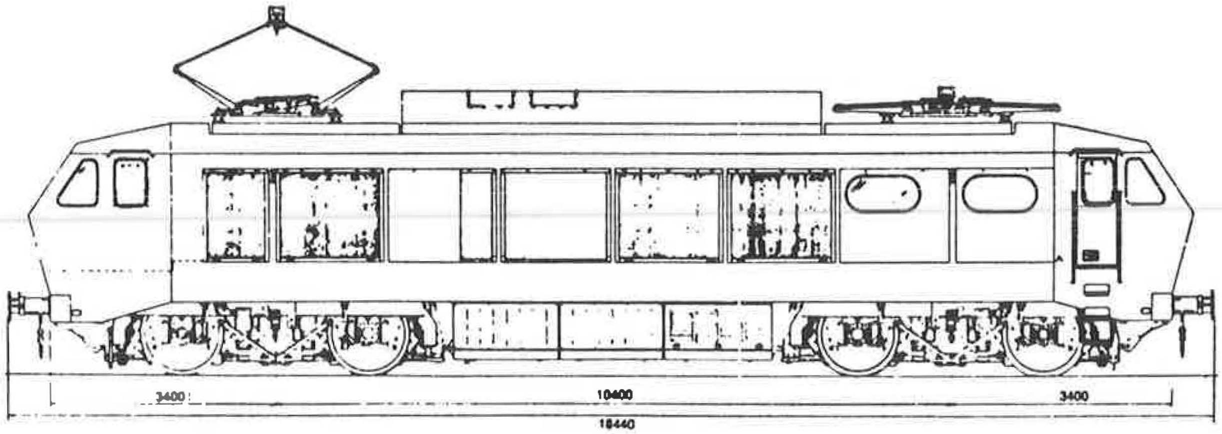

FIGURE 34 Electric locomotive Class E 402 (Italy) with three-phase asynchronous traction motors.

tonnes. The locomotives were not to tilt, but the final decision about whether the coaches should be provided with facilities for tilting was postponed. This locomotive may be considered a successor to the ill-fated Advanced Passenger Train.

Preliminarily designated as IC 225 or Electra, the locomotive finally has been named Class 91. Formal contracts for 31 locomotives to be purchased from the British GEC were signed on October 1, 1986. From the rather scant information presently available about the details of this locomotive, the following may be gleaned: The maximum speed will be 225 km/h. The peak power at rail is supposed to be 4700 kW and the power supply is 25 kV at 50 Hz. The axle load will still be limited to 20 tonnes.

Figure 35 shows a principal layout of the Class 91 locomotive and Figure 36 its drive system of "crossed drive shafts" as envisaged by British Rail. Brief descriptions of the locomotive are given elsewhere (*151, 152*).

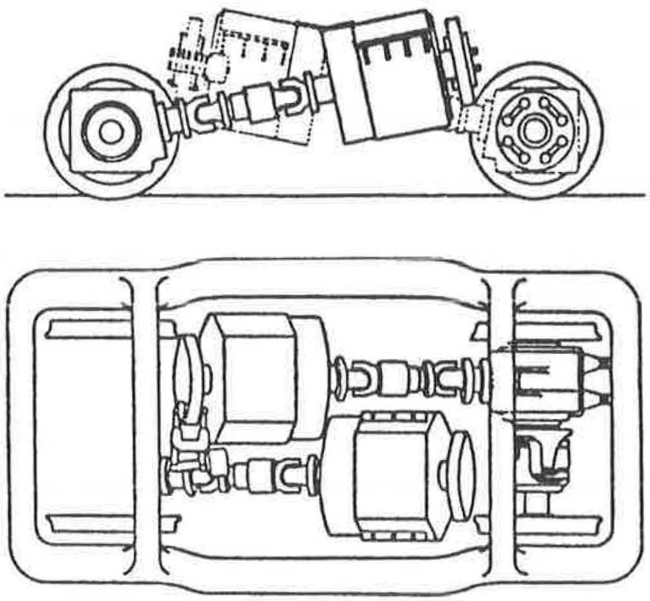

FIGURE 36 Drive system of Class 91 locomotive.

Czechoslovakian Electric Locomotive Project

In addition to the previously mentioned eight-axle locomotive consists Class ChS200 that Skoda has delivered to the USSR, this locomotive manufacturer had, in 1984, a CoCo version on the drawing board rated at 6000 kW and suitable for 200 km/h (Figure 37). The power supply would be 3000-V DC and the total weight 114 tonnes, corresponding to an axle load of 19 tonnes (*131*). Conventional direct-current traction motors were to be used.

During the last few years, Skoda has devoted a lot of effort to developing three-phase asynchronous traction motors (*153*). Two main motor options have been studied: a single 3200-kW body-mounted motor on each truck (a monomoteur) driving both axles of the truck (assuming a BB locomotive) through longitudinal cardan shafts, or the more conventional arrangement of individual 800- to 1000-kW motors mounted in the truck parallel to each axle. The possibility of a fully suspended gearless motor in which the axle passes through the hollow center of the rotor is also under consideration. So far, Skoda's

Maximum speed	225 km/h
Continuous power at rail	4530 kW at 153 km/h 3750 kW at 225 km/h
Power supply	25 kV, 50 Hz
Weight of locomotive	82 tonnes
Axle load	20.5 tonnes
Tractive effort at start	193 kN

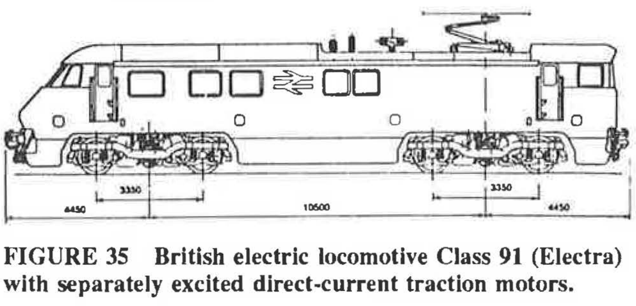

FIGURE 35 British electric locomotive Class 91 (Electra) with separately excited direct-current traction motors.

TABLE 2 SHINKANSEN NETWORK EXPANSION

Date	Distance (km)	Between	Line	Power
March 1972	161	Osaka and Okayama	Sanyo	25 kV, 60 Hz
March 1975	393	Okayama and Hakata	Sanyo	25 kV, 60 Hz
June 1982	496	Ueno and Morioka	Tohoku	25 kV, 50 Hz
November 1982	270	Omiya and Nigata	Joetsu	25 kV, 50 Hz

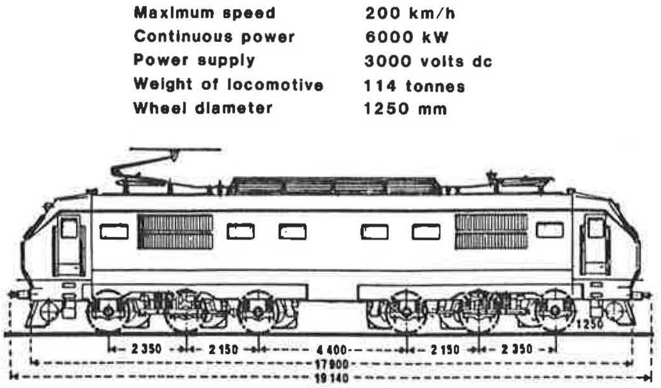

FIGURE 37 Czechoslovakian locomotive project.

efforts have been aimed at locomotives with maximum speeds of 160 km/h. Using three-phase traction motors instead of conventional DC motors is said to reduce, in one particular case, the total length of the locomotive by some 9 percent.

Some high-speed electric multiple-unit cars and power cars are described in the next sections.

Shinkansen Multiple-Unit Train (Japan)

The Japanese Shinkansen trains were the first in the world to run at speeds exceeding 200 km/h on a regular schedule. The main passenger trunk line in Japan is between Tokyo and Osaka. Around 1956 it became clear that the capacity of this line (which was narrow gauge, 1067 mm, and supplied with 1500-V DC) had to be greatly increased to cope with ever-increasing traffic. The construction of a new standard-gauge, 1435-mm, high-speed route about 515 km long was approved in 1959. This was the first railroad in Japan to use standard gauge. Orders for two-car and four-car trainsets were placed in November 1961. The first train was delivered in June 1962 and tried out on a test section of the new line. A speed of 257 km/h was attained in March 1963, and then an order was placed for 180 two-car trainsets (now called the O series). All of these were delivered in time for the opening of the new line, called the New Tokaido Line, on October 1, 1964. It is electrified with 25 kV at 60 Hz. The Shinkansen network has since been expanded (Table 2).

Shinkansen trains use, as a matter of principle, vehicles in which all axles are driven. So far, all of these vehicles have used conventional direct-current traction motors connected in series. This may at least partly explain why the JNR relies on only 3 to 5 percent adhesion at high speeds. The trains are formed entirely from two-car units (coach pairs) one coach of which carries a pantograph, a main circuit breaker, transformer, and rectifier; the other coach carries control gear and braking resistors. Thus the traction equipment is self-contained for each coach pair. The motors are frame mounted and driven through a hollow cardan shaft containing the axle. The motor yoke is partly laminated.

In addition to the production model trains of the O series (for the Tokaido and Sanyo lines) and the 200 series (for the Tohoku and Joetsu lines), experimental cars of type 951 and type 961 have been built. Some of the parameters for these vehicles are given in Table 3.

Figure 38 shows the general arrangement and some principal dimensions of a leading car in a Shinkansen O series train. Descriptions of various Shinkansen cars and their development are given elsewhere (*154–166*). The goal is to increase the maximum speed of new cars with smaller cross sections to 300 km/h in the 1990s. The new series 300 trains will be powered by three-phase asynchronous motors.

Intercity Multiple-Unit Train ET 403 (Germany)

This four-unit train consists of two identical end coaches with passenger compartments, one passenger coach, and one dining car. The first train was delivered in 1973. Each train is powered by 16 traction motors supplied with pulsating direct current (i.e., all axles in the train are powered).

The maximum speed is 200 km/h. Total power at rail is 16 × 240 = 3840 kW continuously, and power supply is from 15 kV at 16⅔ Hz. The weight of the train in working order is 236 tonnes, corresponding to an axle load of 14.8 tonnes. The core-type transformer in each unit is rated 1020 kVA for traction. The control system is based on thyristor phase-angle control with two unsymmetrically semicontrolled rectifier bridges in sequential control. The four-pole compensated traction motors are each rated continuously 240 kW, 750 V, 350 A at 2000 r/min. The mechanical transmission uses a Siemens rubber-ring cardan drive and a gear ratio of 1:3.03. The wheel diameter is 1050 mm.

Figure 39 shows some principal dimensions of an end coach of the ET 403. Descriptions of the train are given elsewhere (*28, 29, 167, 168*).

TABLE 3 PARAMETERS OF SHINKANSEN TRAINS

Parameter	0 Series	200 Series	Type 951	Type 961
Maximum design speed (km/h)	210	210	260	260
Continuous power (kW)	740	920	1000	1100
Wheel diameter (mm)	910	910	1000	980
Gear ratio	29:63	29:63	27:56	25:60
Axle load (tonnes)	16	17	17	16
Transformer rating for traction (kVA)	1500		2260	2450

Maximum speed	km/h	210	(240)
Continuous power per car	kW	740	920
Maximum axle load	tonnes	16	17
Power supply		25 kV, 60 Hz	

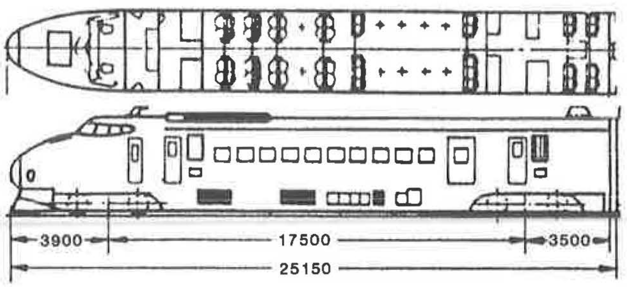

FIGURE 38 Leading power car of Shinkansen train O series (Japan).

Electric Multiple-Unit Train ER 200 (USSR)

The trunk line between Moscow and Leningrad is the most important for intercity passenger traffic in the USSR. Accordingly, it was the first railroad in the Soviet Union to be provided, in 1975, with trainsets designed for speeds of up to 200 km/h. The electric multiple-unit trainsets Class ER 200 have been designed and built by the Riga Carriage Works in Latvia.

The ER 200 is a 14-unit train with a maximum speed of 200 km/h. It has a rather unusual makeup: the end cars have driver's cabs and buffet areas but no driving axles, and the intermediate 12 cars are permanently formed into six identical two-car groups in which all axles are driven. The continuous power at rail is no less than 10 320 kW and the power supply is from 3-kV DC. The track gauge is 1524 mm, and the total weight of the train is 830 tonnes of which 720 tonnes can be used for adhesion. Maximum axle load is 15 tonnes for an empty train and 17 tonnes for a loaded one. The fully suspended conventional direct-current traction motors are each rated 215 kW continuously. The wheel diameter is 950 mm.

Figure 40 shows a picture of and some data on the ER 200. The general arrangement of an end car is shown in Figure 41. Descriptions of the train are given elsewhere (*169–171*).

Maximum speed	200 km/h
Continuous power	840 kW per car
Power supply	15 kV, 16 2/3 Hz
Wheel diameter (new)	1000 mm
Wheel base in truck	2600 mm

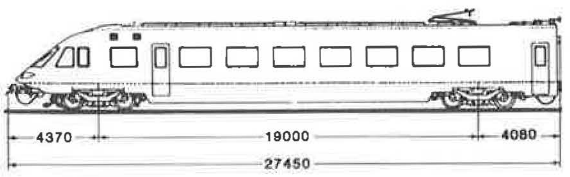

FIGURE 39 Power car (end coach) of train ET 403 (Germany).

Maximum speed	200 km/h	
Power at rail	48 x 215 kW	10320 kW for complete train
Power supply	3000 volts DC	
Weight of powered car	60 tonnes	
Maximum axle load	17 tonnes fully loaded	
Wheel diameter (new)	950 mm	
Gear ratio	1 : 2.35	
Wheel base in powered truck	2500 mm	

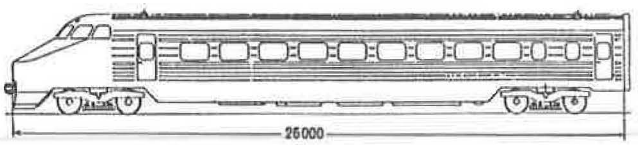

FIGURE 40 Trailer with driver's cab for train Class ER 200 (1 trailer + 12 powered cars + 1 trailer) with direct-current traction motors (USSR).

Maximum speed	200 km/h
Power supply	3000 volts dc
Total propulsion power	10320 kW
Maximum axle load	17 tonnes

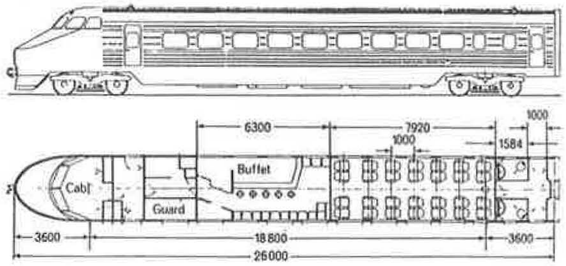

FIGURE 41 Soviet electric high-speed train ER 200 (2 trailers with driver's cab + 12 coaches).

Electric Semiarticulated High-Speed Train—TGV Sud-Est (France)

The straight electric version of the TGV was ordered by the SNCF on February 12, 1976, and the first trainset was handed over to the railroad on July 28, 1978.

Less than a month later, on August 23, it reached a maximum speed of 260 km/h during trials in Alsace. It reached 280 km/h on September 24 the same year. On February 26, 1981, the TGV trainset No. 16 set a world record for wheel-on-rail transportation by attaining a speed of 380 km/h.

The maximum speed of the TGV Sud-Est trains is now 270 km/h in scheduled service. The continuous power at rail is 6300 kW. The power supply is normally from 25 kV at 50 Hz, but all trains can also operate from a 1500-V DC catenary and some are also able to make use of 15 kV at 16⅔ Hz in Switzerland or Germany. The TGV Sud-Est consists of one power car at each end with all four axles powered and, in between, a total of eight intermediate passenger cars that form an indivisible articulated set. The outer nonarticulated two-axle trucks at each end of the eight-car set are also powered. This means that 12 axles of a total of 26 axles in a complete ten-unit train are powered. The total tare weight of a train is 382 tonnes and the adhesion weight 194 tonnes. The maximum axle load is 16.3 tonnes and the wheel diameter (new) 920 mm. The self-ventilated direct-current four-pole traction motors are Alsthom's model TAB 676 and have a continuous rating of 525 kW at 2770 r/min. Rated voltage is 1050 V and rated current 525 A. The motors are frame mounted and drive the wheels through tripod cardan transmissions and reduction gearings. The rotational speed of the motor is 3115 r/min when the train speed is 270 km/h. An important feature of the TAB 676 motor is that its stator is fully laminated.

The principal dimensions of a power car for the TGV Sud-Est are shown in Figure 42. Figures 43 and 44 show, respectively, an unwound traction motor stator and the motor laminations used. A total of 109 trainsets have been ordered and all are already in regular service.

SNCF received approval from the French government in November 1983 to build 346 km of new track to the southwest of Paris, the TGV Atlantique, to be electrified with 25 kV at 50 Hz. The trains to run on this line (95 sets have been ordered) will be different from the TGV Sud-Est in several important respects. The TGV Atlantique train will consist of 12 units—one power car at each end and 10 nonpowered intermediate passenger cars. The traction circuitry will be quite different because of SNCF's decision to use three-phase synchronous traction motors for propulsion. Because these traction motors, within the same space restraints, can be rated 1100 kW continuously instead of 525 kW for the direct-current traction motors used for the TGV Sud-Est, only eight motors per train are needed (instead of 12), and the maximum speed in service can be increased to 300 km/h. Each synchronous motor weighs 1450 kg. A prototype TGV-A train made its first trip on February 3, 1986. In the first week of trials it attained a speed of 290 km/h. On September 23, 1986, the train reached 356 km/h.

Maximum speed	**270 km/h**
Continuous power	**6300 kW (total for train)**
Power supply	**25 kV, 50 Hz or 1500 volts dc**
Wheel diameter (new)	**920 mm**
Maximum axle load	**16.3 tonnes**

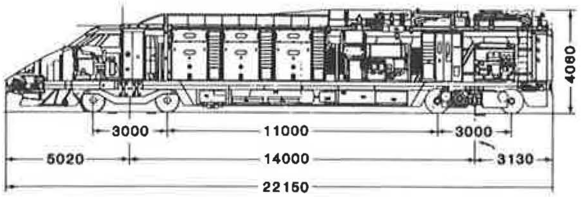

FIGURE 42 Power car for TGV Sud-Est train.

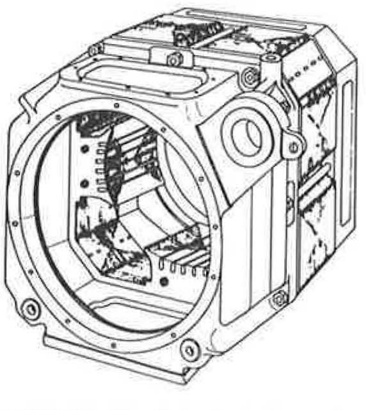

Unwound stator with interpoles removed

Motor type TAB 676
525 kW at 2770 r/min
1050 V, 525 A
3115 r/min at 270 km/h
1500 kg (complete)

FIGURE 43 Principal dimensions of direct-current traction motor for TGV Sud-Est.

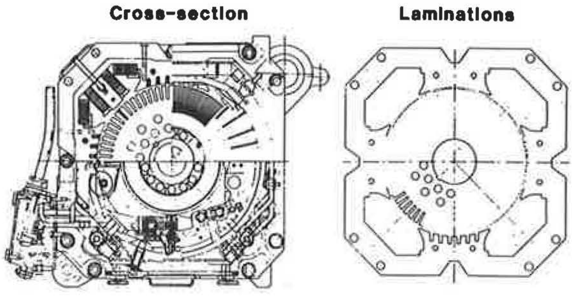

FIGURE 44 Cross section and laminations for direct-current traction motor for TGV Sud-Est.

Information about the TGV Sud-Est trains in general is available elsewhere (*172–179*). Its traction motor is described by Jouy (*180*), and brief information about the TGV Atlantique trains is also available (*30–32, 149, 181, 182*).

Electric Intercity Experimental Train (Germany)

In September 1982, a decision was taken by the Federal Ministry of Research and Technology (BMFT) in Germany to help fund the first stage of a research program aimed at developing a high-speed nonlevitated four-unit trainset consisting of a power car at each end and two intermediate coaches, one of which was to be used as an instrumentation car. The total estimated cost of DM 72 million was to be shared by BMFT (61 percent), the Federal Railway (17 percent), and the manufacturing industry (22 percent).

One of the three diesel-electric locomotives Class DE 2500 with three-phase traction motors built speculatively by Thyssen-Henschel and Brown Boveri in the early 1970s was modified to include a special mechanical transmission, Um-An (*183*). The principle is that the mass of the traction motor is transferred from the truck to the locomotive for high-speed running, thereby reducing the dynamic forces exerted on the track at high speeds. At low speeds the motor rests in the frame in the normal way, but at higher speeds pneumatic cylinders attached to the body lift the motor so that its weight is carried by the secondary suspension.

A series of trials with Um-An proved that it was not indispensable to adopt this principle in toto for the InterCity Experimental (ICE) train. A simpler design was developed. The traction motor and its gearcase are positioned alongside the axle between the side frames of the truck, but the bulk of the mass is supported by the car body in such a way as to permit truck rotation. The outer end of the motor-and-gearcase block is supported by vertical links from the truck frame, and horizontal links and dampers ensure that displacement between gearcase and axle does not exceed limits imposed by the hollow quill drive. To keep the mass of the wheelset down to 1500 kg, three brake discs are mounted on the hollow shaft carrying the gearwheel and not on the axle itself. Figures 45 and 46 show in principle the drive systems for the Um-An and the ICE, respectively.

The electrical equipment is modeled on that used in the Class 120 electric locomotives with three-phase motors, but, of course, it has somewhat different parameters. The first ICE

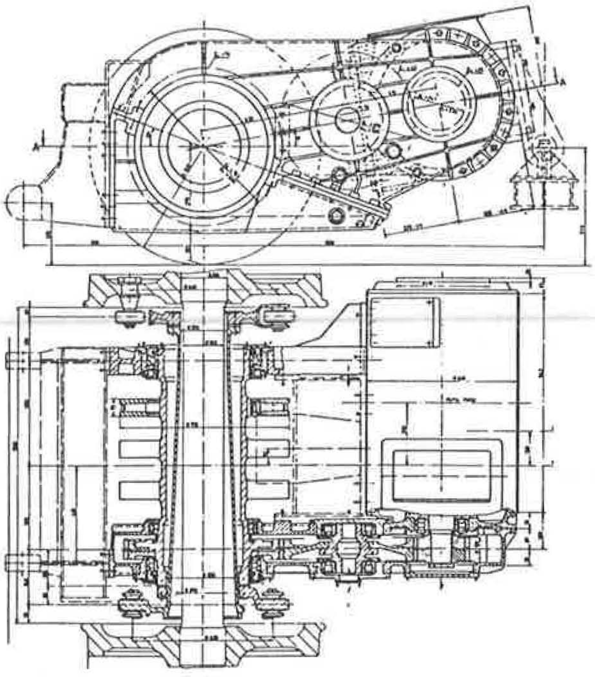

FIGURE 45 Um-An high-speed drive system.

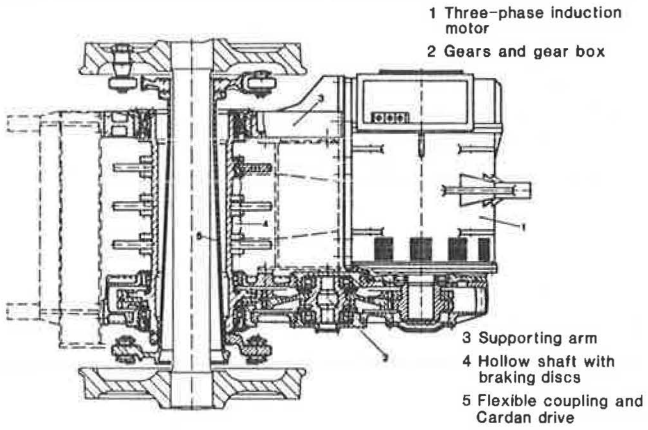

FIGURE 46 ICE drive system.

power car was demonstrated for the press for the first time on February 21, 1985. The whole train was shown to the general public on November 26, 1985, and on the same day attained a maximum speed of 317 km/h. In the middle of 1986, a power car was tested on a roller rig in Munich at a simulated speed of 385 km/h.

The ICE is designed for a maximum speed of 350 km/h. The continuous power at rail is, according to UIC rules, 2800 kW per power car. Power supply is from 15 kV at 16$^2/_3$ Hz. The total weight of a five-unit train is about 304 tonnes, of which about 156 tonnes (78·tonnes per power car) can be used for adhesion. This corresponds to a maximum axle load of 19.5 tonnes. The transformer in each power car has a continuous rating of 3200 kVA. The control system consists of a four-quadrant controller (1430-V input voltage and 1050-A rated current), a direct-current link with a voltage of 2800 V, and a voltage source inverter with an output rating of 1900 kVA, 2200 V, 600 A, at a maximum frequency of 130 Hz. The separately cooled four-pole three-phase asynchronous traction motors have a stator core length of 475 mm, and the inside diameter of the stator laminations is 380 mm. Each motor has a continuous rating of 700 kW, 2050 V, 232 A, 2077 r/min, and the maximum speed is 3670 r/min. The wheel diameter (new) is 1000 mm.

Figure 47 is a picture of the ICE train, and Figure 48 shows some principal dimensions of an ICE power car. The outside dimensions of a traction motor for this train are indicated in Figure 49, and Figures 45 and 46 show the two mechanical drive systems contemplated. Development of the ICE is discussed elsewhere (*13, 183–192*).

Electric High-Speed Train X 2 (Sweden)

In 1973 Swedish State Railways (SJ) and ASEA signed an agreement to develop a train that, with the help of active body tilting, could run at speeds exceeding 200 km/h even through existing curves with radii down to 1000 m. An existing three-car electric trainset Class X 5 was to be modified and used for tests. After years of experiments SJ requested bids for a number of high-speed trains to meet very tough specifications including a maximum axle load of 15 tonnes. It was only after SJ relaxed this requirement to 17.5 tonnes that it was possible for a bidder to meet the other parts of the specification—and then only by applying three-phase traction instead of direct-current traction motors.

In August 1986, ASEA Traction received an order from SJ for a fleet of 20 high-speed trainsets with an option for 32 additional sets. The first 20 sets will operate on the trunk line between Stockholm and Gothenburg, which in 1986 had an

FIGURE 47 ICE train (Germany).

Maximum speed	350 km/h
Continuous power	3640 kW
Maximum power	4200 kW
Wheel diameter (new)	1000 mm
Weight of power car	78 tonnes

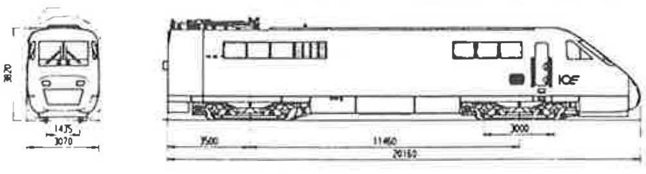

FIGURE 48 ICE power car.

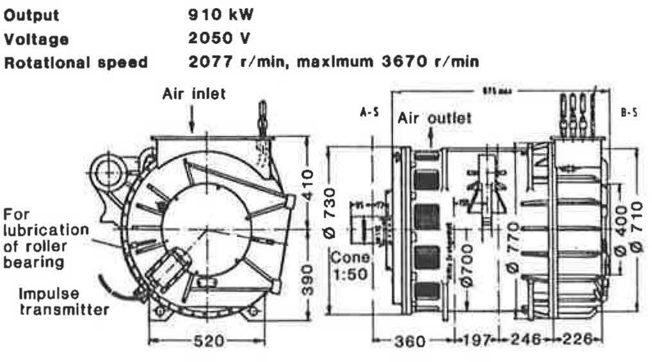

FIGURE 49 ICE three-phase traction motor.

annual ridership of about 2.7 million passengers. The new high-speed train, X 2, embodies three technical characteristics of importance for use on existing curved track:

1. Trucks with radial steering axles: These are based on experience since 1976 with the electric trainset X 15 (which is a modified X 5) and since 1982 with series-produced X 10 multiple-unit trainsets.
2. Active tilting system: Tests with an experimental train for about 15 years have shown that full compensation for lateral acceleration on curves is not necessary and, indeed, not even desirable. The system selected for the X 2 will reduce lateral acceleration experienced by passengers to 30 percent of what it would have been without tilting. Active hydraulic tilting, maximized to a 6.5-degree effective tilting angle, will be used.
3. Propulsion system with three-phase asynchronous traction motors: This means lighter motors and lower unsprung mass for the trucks. The control system will make use of gate-turn-off (GTO) thyristors.

The X 2 train will, in principle, consist of one power car and five coaches. The coach at the end of the train will be provided with a driver's cab from which the train can be monitored. The maximum train speed in scheduled service will be 200 km/h. The continuous power at rail is 3260 kW, and the power supply is 15 kV at 16⅔ Hz. The total weight of a five-unit train fully loaded is 343 tonnes, of which 70 tonnes can be used for adhesion, corresponding to an axle load of 17.5 tonnes. The main transformer is oil cooled and mounted under the carbody. It has four separate secondary windings supplying the four line-side converters that use self-commutated GTO thyristors. There are two DC links that consist of capacitor banks and are normally connected in parallel. The power car has two independently operating inverters, each supplying two traction motors in the same truck. All converters and inverters are liquid cooled. The asynchronous traction motors are fully suspended and force ventilated and have form-wound stator windings. Rotor resistance is optimized between the opposing requirements of low losses and maximum allowable difference between diameters of wheels in the same truck. The wheel diameter (new) is 1100 mm in the power car and 880 mm in the coaches.

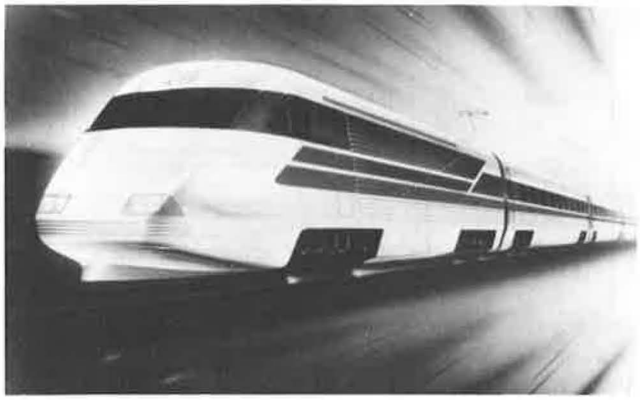

FIGURE 50 High-speed train Class X 2 (Sweden) with maximum speed of 200 km/h and three-phase traction motors.

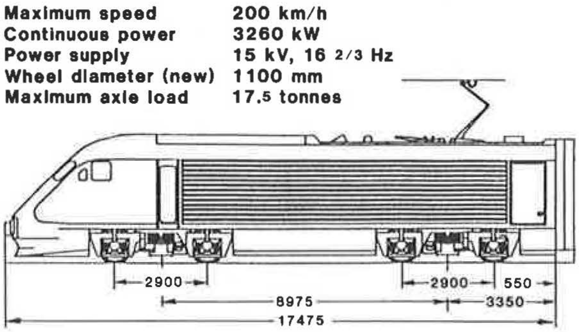

FIGURE 51 Power car for train X 2 (Sweden).

Figure 50 shows an artist's conception of the X 2 train, and Figure 51 indicates some of the principal dimensions of its power car. Brief information about the train is given elsewhere (*193, 194*).

GEARLESS TRACTION MOTOR DRIVES

In the mid-1970s British Rail developed a gearless three-phase asynchronous traction motor drive of a special kind. The motor has been turned inside out in that a wound "stator" is inserted within a hollow tube connecting the vehicle wheels, and a squirrel cage "rotor" winding is fixed to the inside of that hollow tube. The whole arrangement was called a tubular axial induction motor (*195, 196*). The idea appears to have been later abandoned.

As already mentioned, the Skoda locomotive manufacturer in Czechoslovakia is considering the possibility of using a fully suspended gearless traction motor in which the locomotive axle passes through the hollow center of the rotor (*153*).

Similar ideas are also being discussed in the USSR (Figure 52) (*197*). The rotor is pressed onto a hollow shaft surrounding the locomotive axle. If necessary for easy assembly and disassembly, the stator can without too much difficulty be designed and built in two halves. The transmission of torque from the hollow shaft of the rotor to the locomotive wheel can be achieved in many different ways. Figure 52 shows one example.

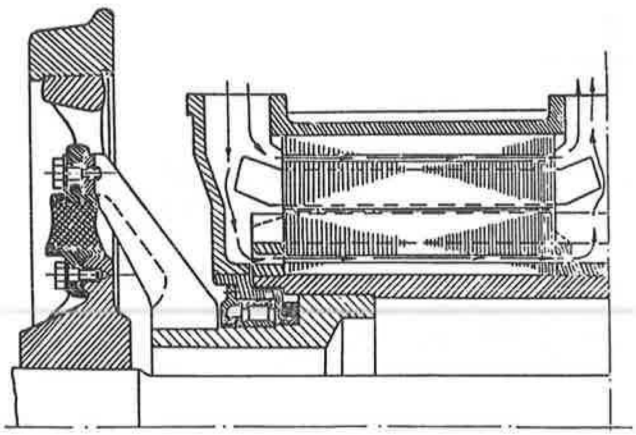

FIGURE 52 Gearless drive for electric locomotive—proposal with three-phase traction motor (USSR).

The elimination of gear and gearbox (and, in comparison with a direct-current motor, the commutator as well) enables the core length to be correspondingly increased thereby enhancing the motor torque for an unchanged diameter. However, because the power output is proportional to the rotational speed and a gearless motor is unable to take any advantage of gear ratio, the increased core length is unlikely to compensate for loss of power output because of a much lower motor speed for a given locomotive speed. Advantages of a gearless motor may be lower iron losses in the motor and eliminated gear losses. The rotor bearing design may also have some advantages. The wheel base of the truck may be reduced if desired.

LEVITATED TRANSPORTATION

The last part of this survey will deal with levitated transportation. Levitation means raising and keeping a heavy body in the air with no visible support. Levitation can be achieved either by an air cushion or by some type of magnetic "cushion" between the vehicle and the track. To accomplish the intended movement along the track, the vehicle has to be guided laterally in order to follow the track, and thrust must be provided to move the vehicle longitudinally.

There was considerable interest in air-cushioned vehicles in the late 1960s and early 1970s, primarily in France, Britain, and the United States. A Frenchman, Jean Bertin, built several vehicles of this type, the first a small jet-propelled prototype, Aerotrain 01, that ran on a test track in December 1965. The next, Aerotrain 02, achieved 425 km/h on January 22, 1969, propelled by a jet engine with a thrust of 12.3 kN temporarily increased with the help of a rocket with 4.9-kN thrust. Bertin also designed and built a full-scale vehicle, Orleans 180 (*198*). It was driven by a propeller developing a thrust of 39 kN at 1800 r/min. The propeller itself was driven by two gas turbines with a combined power of about 1800 kW. The vehicle was supported by six air cushions and guided by six additional air cushions acting against the central vertical member of the inverted-T concrete guideway. However, plans to build a tracked air-cushion vehicle (TACV) line from Cergy to Paris were canceled by the French government on July 17, 1974.

In Britain, a company called Tracked Hovercraft Limited developed air-cushioned research vehicles to run on a 5-km test track in Cambridgeshire. The first vehicle, RTV 31, was delivered on August 2, 1971. It ran at a maximum speed of 167 km/h on February 7, 1973, but a week later the British government announced that work on this project would be discontinued. The vehicles designed by Tracked Hovercraft used linear induction motors for thrust (*199, 200*).

Before its demise, Tracked Hovercraft received a contract from the U.S. Department of Transportation (DOT) to advise on the choice of air-cushion systems in the United States. The DOT awarded, in 1971, a contract to Grumman Aerospace Corporation to design and build a tracked air-cushioned research vehicle to be driven by a linear motor and to be tested at the Pueblo test center. This vehicle was originally powered by three JT 15D turbofan engines designed to give it a maximum speed of 200 km/h. These engines provided power for lift and guidance as well as propulsion. The Rohr Corporation received a grant from the Urban Mass Transportation Administration (UMTA) to build a prototype based on Aerotrain techniques. This vehicle was designed for a maximum speed of 270 km/h and propelled by a linear induction motor (LIM) developing about 1850 kW and a maximum thrust of 44 kN. Power was collected from three conductor rails holding the collector shoe captive and guiding it independently from the vehicle. The guideway was of the inverted-T configuration; the upright center member was formed by the LIM reaction rail. Lift and guidance power for the vehicle was provided by two electrically powered fans, each rated 260 kW. In May 1974, this research vehicle reached 383 km/h at Pueblo. Jet engines had been mounted at the rear of the vehicle to provide direct thrust.

At this time, because of less than satisfactory experience in Britain and France with air-cushioned vehicles, the Grumman test vehicle was rebuilt to be used for magnetic levitation and renamed the Tracked Levitated Research Vehicle (TLRV). A linear induction motor providing a continuous thrust of 22.2 kN and built by Garrett was fitted to the vehicle. Rectifier and inverter were also supplied by Garrett. In its final form, the vehicle was intended to be propelled by both a linear motor and a gas turbine.

In addition to the vehicles already mentioned, there was a linear induction motor research vehicle (LIMRV) intended solely to develop and test LIM technology. The LIMRV was designed and built by AiResearch and started operations in 1971. The primary propulsion system was an on-board gas-turbine-driven alternator rated 3000 kVA supplying a variable-voltage variable-frequency linear induction motor. Two external jet thrust boosters were installed to attain a designed maximum speed of 400 km/h.

On January 3, 1975, the U.S. DOT canceled all of the programs related to levitated vehicles. The vehicles mentioned here are described elsewhere (*201–204*).

Germany and Japan decided rather early in favor of magnetic levitation instead of air cushions. A number of magnetically levitated vehicles have been built and tested in these two countries. Some of them are listed in the Table 4. They are all driven by linear motors. Levitation is achieved magnetically but can be of either of two types depending on the relative position between linear motor components located on the vehicle and those located in the track. Repulsion-type levitation, as the name indicates, is based on the components on both sides of the air gap repelling one another. In attraction-type levitation they attract each other. The relative position of the interacting surfaces must, of course, in both cases be such as to actually lift the vehicles above the track.

At the end of 1977, the German Federal Ministry for Research and Development decided that all magnetic levitation efforts in Germany should be concentrated on the attraction system. Previously, both systems had been built and tested. In Japan, Japan Air Lines has favored an attraction system for its research vehicles of the High-Speed Surface Transport (HSST) type; the Japanese National Railways so far has aimed development toward a repulsion system.

The principles applied to linear motors and a comparison between such motors and conventional "rotating" motors are indicated in Figures 53 and 54. Selected papers on linear motors of different types applied to transportation can be found elsewhere (*205–220*).

The fastest Maglev vehicle so far, the Japanese ML 500, is shown in Figures 55–57. The Japanese Ministry of Transport announced in 1970 an extensive program to develop guided ground transport using magnetic levitation of the repulsion type and linear motors for propulsion. Two research vehicles, ML 100 with a short-stator linear induction motor drive, and ML 100A with a long-stator linear synchronous motor drive, were built and tested (*211, 221–223*); they were followed by a bigger vehicle, the ML 500, also with a long-stator linear synchronous motor drive. The ML 500 attained a maximum

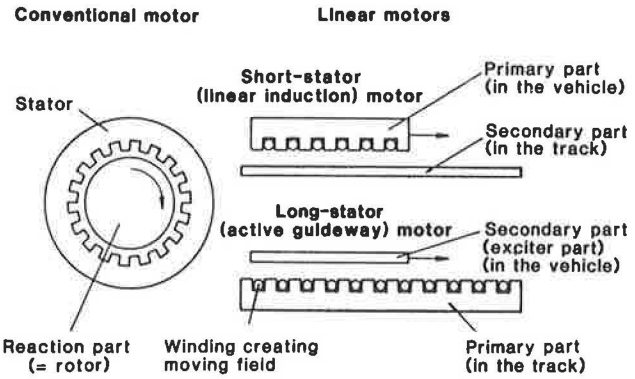

FIGURE 53 Comparison of conventional rotating motors and short-stator or long-stator linear motors.

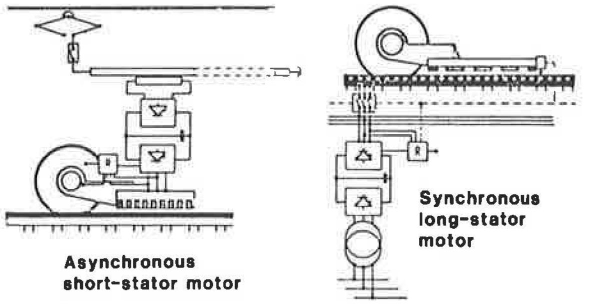

FIGURE 54 Principles of linear motors.

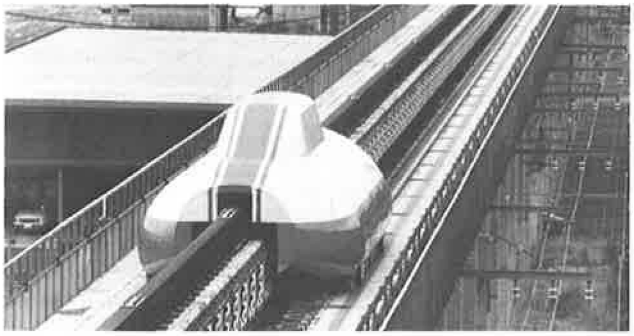

FIGURE 55 Maglev experimental vehicle ML 500 (Japan).

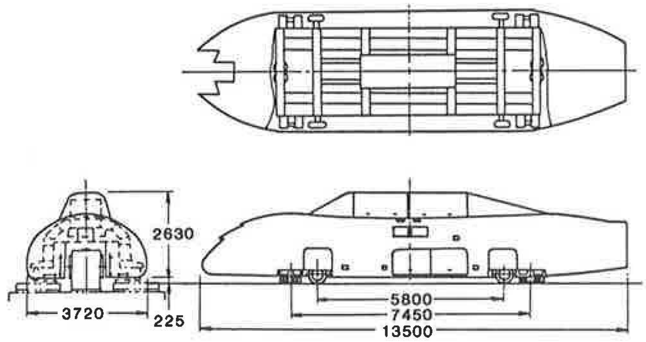

FIGURE 56 Maglev experimental vehicle ML 500 (achieved 517 km/h on December 21, 1979).

FIGURE 57 Cross section of Maglev vehicle ML 500 on inverted-T guideway.

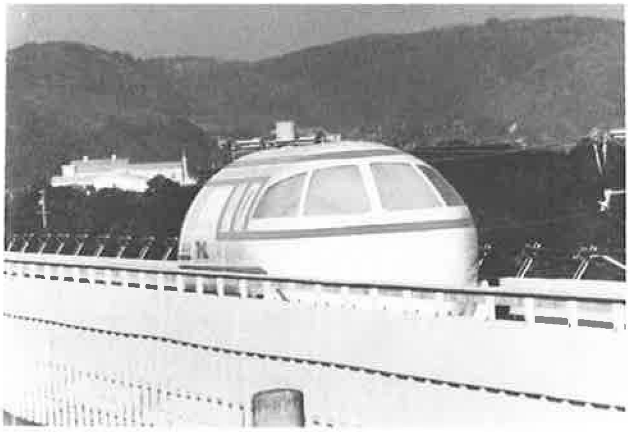

FIGURE 58 Maglev experimental vehicle MLU 001 (Japan).

TABLE 4 SOME MAGLEV VEHICLES

	Vehicle parameters				Levitation mm	Levitation principle	Type of motor	Attained speed km/h
	Length mm	Width mm	Height mm	Tare weight tonnes				
TR 02	11000			12.0		Attraction	SSIM	164
TR 04	15000	3400		18.5	12	Attraction	SSIM	253
TR 05	26240	3100	3430	30.8	13	Attraction	LSSM	75
TR 06	54200	3700	4200	102.4	10	Attraction	LSSM	413
ML 500	13500	3720	2630	9.9	100	Repulsion	LSSM	517
MLU 001	13000	3000	3300	10.0		Repulsion	LSSM	400

speed of 517 km/h on December 21, 1979 (*224*). The track at the Miyazaki test center was then reconstructed from an inverted-T-type to a U-type version, and three units of a new Maglev experimental train, MLU 001, were built one at a time. Figures 58 and 59 show the first MLU 001 unit and Figure 60 a complete train of this type. Short descriptions of the MLU 001 are given elsewhere (*225–227*). Unmanned tests with the complete MLU 001 three-unit set started on November 1, 1981, and manned tests began in September 1982.

In Germany, where the first patent on the magnetic levitation principle was granted on August 11, 1934, to Hermann Kemper, a number of Maglev test vehicles have been built (*210*). A special circular test track 280 m in diameter was built in Erlangen, and an experimental vehicle, EET 01, ran for the first time on this track in 1976 at speeds of up to 180 km/h

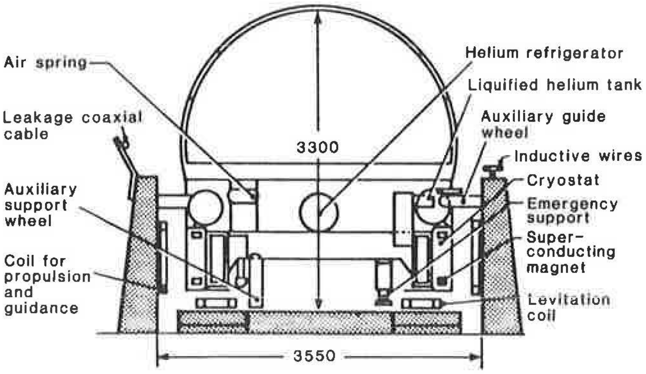

FIGURE 59 Cross section of Maglev experimental vehicle MLU 001.

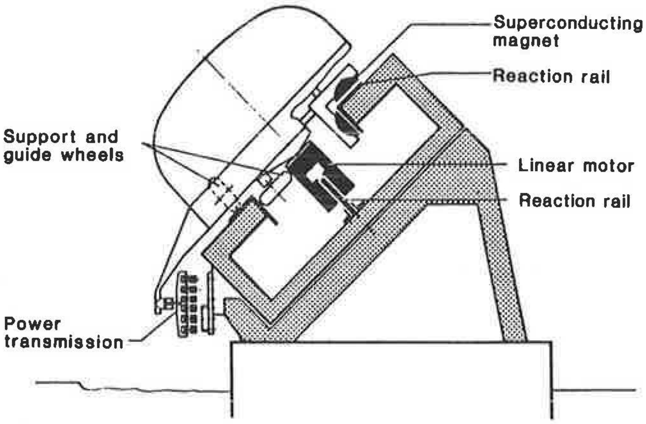

FIGURE 61 Maglev test track in Erlangen, Germany.

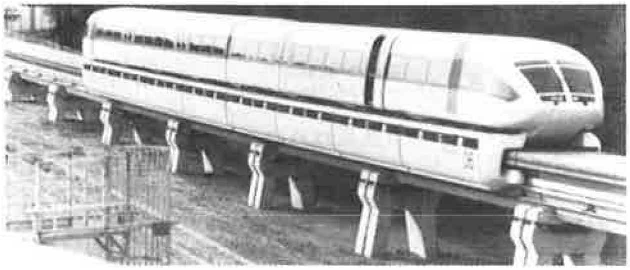

FIGURE 62 Maglev vehicle Transrapid 06 designed for 400 km/h (Germany).

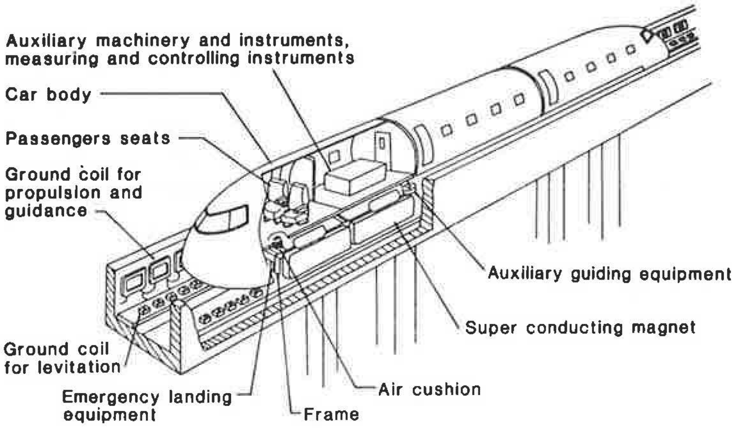

FIGURE 60 Three-car Maglev train Class MLU 001 (Japan).

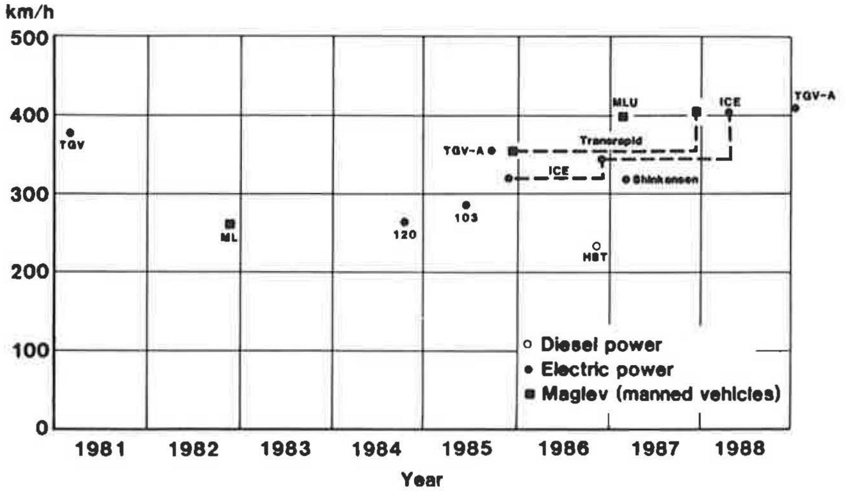

FIGURE 63 Recent speed records.

using an air gap of about 100 mm. This vehicle made first use of a short-stator linear induction motor drive and later a long-stator synchronous motor drive (Figure 61) (*228*).

It would appear that, at least in Germany, the choice of magnetic levitation and propulsion system is clear: the Transrapid system based on attraction-type levitation and using a long-stator linear synchronous motor drive is technically very promising and may become economically acceptable for certain routes between heavily populated areas (*210, 214, 217, 219, 229–233*). On December 12, 1985, the TR 06 attained a speed of 355 km/h and, after the full 31-km-long test track in Emsland had been completed, a maximum speed of 412.6 km/h was attained on January 22, 1988. Figure 62 is a picture of the Transrapid 06 vehicle.

CONCLUSIONS

It is always risky to try to predict the future, but some conclusions may be drawn from recent speed records (Figure 63) and the advancement of technologies described in this paper.

The conventional adhesion-dependent wheel-on-rail technology is likely to be used for maximum speeds up to 300 km/h (as is done with the TGV Atlantique) and possibly 350 km/h. Because of the high power requirements, it will be necessary to use, for speeds like these, straight-electric power in locomotives, power cars, or multiple-unit trains. Gas-turbine-powered vehicles with electric transmissions may be used for some nonelectrified routes. For maximum speeds above 350 km/h, use of an adhesion-independent Maglev system appears inevitable, and, assuming economic feasibility, the most probable choice is a long-stator linear synchronous motor system.

To minimize power requirements, the high-speed train of the future has to make use of a well-developed aerodynamic shape including underbody streamlining and radial steering trucks to achieve the lowest possible train resistance. The power required will, nevertheless, be of such a magnitude that a three-phase propulsion system with either asynchronous or synchronous motors, rotating or linear, must be adopted.

In cases in which a high-speed ground transportation system is deemed necessary, but constructing new track would be economically prohibitive, powered tilting of passenger cars may be a practical solution.

Recently developed materials that superconduct at much higher temperatures than was previously possible may find an important and interesting application in propulsion systems for high-speed trains.

REFERENCES

1. T. Ohyama and S. Shirai. Adhesion at Higher Speeds and Its Control. *RTRI* (Japan) *Quarterly Reports*, Vol. 23, No. 3, 1982, pp. 97–104.
2. F. Nouvion. The French High Speed Motor Units. *French Railway Techniques*, Vol. 11, No. 2, 1968, pp. 79–95.
3. E. W. Curtius and A. Kniffler. Neue Erkenntnisse über die Haftung zwischen Treibrad und Schiene. *Elektrische Bahnen*, Vol. 21, No. 9, 1950, pp. 201–210.
4. M. Tessier and C. Mignot. Programme for Technical Research into Very High Speeds. *French Railway Techniques*, Vol. 13, No. 1, 1970, pp. 1–13.
5. R. G. Gawthorpe. Aerodynamics of Trains in the Open Air. *Railway Engineer International*, Vol. 3, No. 3, 1978, pp. 7–12.
6. E. Kuhla. Der Advanced Passenger Train: Programm und Innovation. *ZEV Glasers Annalen*, Vol. 102, No. 5, 1978, pp. 137–142.
7. T. Maeda et al. Aerodynamic Drag of Series 200 Shinkansen Train. *RTRI* (Japan) *Quarterly Reports*, Vol. 25, 1984, pp. 140–143.
8. T. Hara et al. Aerodynamic Drag of Trains. *RTRI* (Japan) *Quarterly Reports*, Vol. 8, No. 4, 1967, pp. 226–229.
9. M. Bernard. New Knowledge About Train Resistance at Very High Speed. *French Railway Techniques*, Vol. 18, No. 2, 1975, pp. 31–36.
10. W. Hillmann et al. Aerodynamische Untersuchungen zur Entwicklung der DB-Lokomotive 103 für hohe Fahrgeschwindigkeiten. *Glasers Annalen*, Vol. 92, Nos. 9, 11, 1968, pp. 269–276, 352–360.
11. C. J. Baker. Fact and Friction. *Modern Railways*, Vol. 41, No 425, 1984, pp. 86–88.
12. W. Rappenglück. Fahrzeugtechnik für den Hochgeschwindigkeits-Personenverkehr. *Eisenbahntechnische Rundschau*, Vol. 29, No. 7/8, 1980, pp. 525–534, 536.
13. H. R. Kurz. Der Hochgeschwindigkeits-Versuchszug Intercity-Experimental. *Eisenbahntechnische Rundschau*, Vol. 32, No. 12, 1983, pp. 807–812, 815–817.
14. D. Lübke. Intercity-Experimental. *ZEV Glasers Annalen*, Vol. 108, No. 9, 1984, pp. 255–261.
15. Underbody Streamlining Cuts Energy Costs. *International Railway Journal*, Vol. 26, No. 8, 1986, p. 42.

16. Aerodynamic Drag Measurements. *Modern Railways*, Vol. 43, No. 455, 1986, p. 439.
17. W. J. Davis, Jr. The Tractive Resistance of Electric Locomotives and Cars. *General Electric Review*, Vol. 29, No. 10, 1926, pp. 685–707.
18. J.-L. Peters. Optimising Aerodynamics To Raise IC Performance. *Railway Gazette International*, Vol. 138, No. 10, 1982, pp. 817–819.
19. M. Bernard. The Aerodynamic Properties of Trains. *French Railway Techniques*, Vol. 14, No. 3, 1971, pp. 61–76.
20. M. Oishi. Running Resistance of Shinkansen Electric Cars. *RTRI* (Japan) *Quarterly Reports*, Vol. 15, No. 3, 1974, p. 172.
21. S. Jones. The Advanced Passenger Train: An Economic Alternative to the Construction of New Track for High Speed. *Rail International*, Vol. 7, No. 7, 1975, pp. 605–614.
22. M. Bernard and C. Guiheu. Mesures récentes de la résistance à l'avancement de matériels roulants. *Revue Générale des Chemins de Fer*, Vol. 95, No. 4, 1976, 243–255.
23. H. Hochbruck and J. Körber. Traktion mit Drehstromlokomotiven—Bedeutung für die Zukunft. *Eisenbahntechnische Rundschau*, Vol. 26, No. 1/2, 1977, pp. 13–14, 16–18, 20–22, 24.
24. J.-C. Boutonnet. L'aluminium dans la construction du matériel ferroviaire. *Revue Générale des Chemins de Fer*, Vol. 99, No. 4, 1980, pp. 241–256.
25. R. G. Gawthorpe. Train Drag Reduction from Simple Design Changes. *International Journal of Vehicle Design*, Vol. 3, No. 3, 1982, pp. 263–274.
26. S. Ozava et al. Wind Tunnel Investigation of Aerodynamic Drag of Future Shinkansen Train with Modified Nose Configuration. *RTRI* (Japan) *Quarterly Reports*, Vol. 23, No. 4, 1982, pp. 189–190.
27. H. Neppert. Komponenten-Widerstände im Einfluss der Grenzschicht an Zugen variabler Länge. *ZEV Glasers Annalen*, Vol. 108, No. 9, 1984, pp. 239–247.
28. Prototype EMU Sets for DB's High-Speed Intercity Routes. *Railway Gazette International*, Vol. 128, No. 8, 1972, pp. 293–295.
29. Ultra-Modern Light-Weight Constructional Features Applied to DB 200 km/h Electric Train Sets. *Rail Engineering International*, Vol. 3, No. 7, 1973, pp. 314–316.
30. D. Brun. Why the French Chose Synchronous Motors. *Railway Gazette International*, Vol. 141, No. 2, 1985, pp. 130–134.
31. Y. Machefert-Tassin and A. Gache. La traction électrique par moteurs sans collecteurs. *Revue Générale des Chemins de Fer*, Vol. 104, No. 10. 1985, pp. 511–528.
32. SNCF Orders 300 km/h Trains. *Railway Gazette International*, Vol. 141, No. 12, 1985, p. 897.
33. G. Manz. Traktionstechnische Massnahmen und Planungen der DB für den Schnellverkehr mit elektrischen Triebfahrzeugen. *Glasers Annalen*, Vol. 95, No. 7/8, 1971, pp. 181–190.
34. R. Ford. UK Ltd Bids for Channel Tunnel Through Trains. *Modern Railways*, Vol. 43, No. 452, 1986, pp. 263–264.
35. J. Kuhlow. Bahnantriebe mit Drehstrommotoren. *ZEV Glasers Annalen*, Vol. 98, No. 7/8, 1974, pp. 245–251.
36. M. Mauzin et al. Une nouvelle voiture dite "pendulaire" destinée aux très grandes vitesses. *Revue Générale des Chemins de Fer*, Vol. 76, No. 11, 1957, pp. 581–593.
37. R. Terrasse and R. Joly. Running of Tilting Railway Vehicles over Curved Track. *French Railway Techniques*, Vol. 13, No. 3, 1970, pp. 89–103.
38. F. Hegenbarth. Dieseltriebwagenzug Baureihe 624/924 für Bezirks- und Nahverkehr mit gleisbogenabhängiger Luftfedersteuerung. *Glasers Annalen*, Vol. 93, No. 1, 1969, pp. 22–26.
39. DB Experiments with Powered Tilting of Coach Bodies. *Railway Gazette*, Vol. 125, No. 2, 1969, pp. 57–58.
40. S. Sakai. Increase of Train Speeds on Curves. *Japanese Railway Engineering*, Vol. 10, No. 3, 1969, pp. 33–35.
41. T. Shima. Running Tests of the Pendulum Electric Railcar (Ku-Mo-Ha 591 Series). *Japanese Railway Engineering*, Vol. 11, No. 2, 1970, pp. 20–21.
42. Tilting Coaches To Raise Speeds on Curves. *Railway Gazette*, Vol. 126, No. 17, 1970, pp. 655–659.
43. Higher Speeds on the Narrow Gauge. *Railway Gazette International*, Vol. 127, No. 8, 1971, pp. 310–312.
44. Unique Suspension Tilts JNR Gas-Turbine Prototype. *Railway Gazette International*, Vol. 127, No. 11, 1971, pp. 430–432.
45. S. F. Smith. The Advanced Passenger Train. *Railway Gazette*, Vol. 124, No. 11, 1968, pp. 409–412, 416.
46. N. J. Granger. Remote Electrical Readout Spirit-Level Technique Applied to BR APT Body-Tilt Control. *Rail Engineering International*, Vol. 4, No. 3, 1974, pp. 124–127.
47. Prototype APTs Take Shape at Derby. *Railway Gazette International*, Vol. 133, No. 1, 1977, pp. 27, 29, 31.
48. FS Orders Prototype Tilting Train. *Railway Gazette*, Vol. 126, No. 13, 1970, p. 485.
49. High Speed Motive Power Development Moves Ahead in Italy. *Railway Gazette International*, Vol. 129, No. 5, 1973, pp. 190–191, 193.
50. O. Santanera. FS and RENFE Try Out Tilt-Body Prototype Trains. *Railway Gazette International*, Vol. 130, No. 3, 1974, pp. 101–104.
51. W. Messerschmidt. Ein italienischer Triebzug mit gleisbogenabhängiger Wagenkastensteuerung. *ZEV Glasers Annalen*, Vol. 99, No. 9, 1975, pp. 261–263.
52. J. L. S. Gonzales. Passengers Will Sample Tilting Train This Spring. *Railway Gazette International*, Vol. 133, No. 2, 1977, pp. 56–57, 59.
53. Una svolta per l'alta velocità in Italia. *Ingegneria Ferroviaria*, Vol. 40, No. 7, 1985, pp. 415–417.
54. N. Nilstam. Swedish Body-Tilting Electric Set for Very High Speed on Severely-Curved Main Lines. *Rail Engineering International*, Vol. 11, No. 2, 1982, pp. 58–62.
55. R. Ford. Sweden—First with Practical Tilting Trains? *Modern Railways*, Vol. 41, No. 424, 1984, pp. 21–23.
56. SJ Orders Tilting Trains. *International Railway Journal*, Vol. 26, No. 10, 1986, pp. 44, 46.
57. D. J. C. Lumpie. Experimental Talgo Features Pendular Body-Tilting. *Railway Gazette International*, Vol. 133, No. 2, 1977, pp. 58–59.
58. Tilting Talgos Will Cut RENFE Schedules from May. *Railway Gazette International*, Vol. 136, No. 2, 1980, pp. 143–144.
59. L. M. de Oriol y Lopez Montenegro. Der Talgo Pendular. *Elektrische Bahnen*, Vol. 83, Nos. 5, 6, 1985, pp. 156–158, 160–162, 192–194, 196–197.
60. British Railways High Speed Passenger Train Takes Shape. *Rail Engineering International*, Vol. 1, No. 1, 1971, pp. 21–23.
61. S. Janota and H. M. Dannatt. British Railways Prototype High Speed Train for 200 km/h. *Rail Engineering International*, Vol. 2, No. 4, 1972, pp. 156–165.
62. W. M. Stanier. The High Speed Train. *Railway Engineering Journal*, Vol. 2, No. 4, 1973, pp. 4–11.
63. B. G. Sephton. The High Speed Train. *Railway Engineering Journal*, Vol. 3, No. 5, 1974, pp. 22–41.
64. How HST Kept Rolling at 200 km/h. *Railway Gazette International*, Vol. 135, No. 2, 1979, pp. 144–145.
65. S. F. Smith. The Advanced Passenger Train. *Railway Gazette*, Vol. 124, No. 11, 1968, pp. 409–412, 416.
66. APT Enters Three-Year Development Phase. *Railway Gazette International*, Vol. 126, No. 21, 1970, pp. 827–828.
67. BR APT . . . Initial Trials. *Rail Engineering International*, Vol. 1, No. 5, 1971, pp. 212–217.
68. A. H. Wickens. APT-E Takes to the Rails. *Railway Gazette International*, Vol. 128, No. 5, 1972, pp. 185–189.
69. BR APT Experimental Train for 250 km/h Trials. *Rail Engineering International*, Vol. 2, No. 6, 1972, pp. 274–280.
70. B. Gunston. The Aerospace Train. *Flight International*, Vol. 102, No. 3319, 1972, pp. 536–540.
71. APT Programme Moves Ahead After Searching Reappraisal. *Railway Gazette International*, Vol. 129, No. 12, 1973, pp. 469–471.
72. The Advanced Passenger Train. *Modern Railways*, Vol. 34, No. 341, 1977, pp. 56–62.
73. D. Boocock and M. Newman. The Advanced Passenger Train. *Railway Engineer*, Vol. 2, No. 2, 1977, pp. 20–27, 38.
74. R. T. Ribbons. Basic Design Philosophy of the Advanced Passenger Train. *Rail Engineering International*, Vol. 9, No. 2, 1980, pp. 42–45.

75. Canada's LRC Prototype Coach on Trial. *Railway Gazette International*, Vol. 127, No. 11, 1971, pp. 438–439.
76. LRC: Canada's High Speed Contender. *Railway Gazette International*, Vol. 128, No. 8, 1972, pp. 310–311.
77. MLW Delivers Power for Canada's LRC. *Railway Age*, Vol. 174, No. 1, 1973, p. 9.
78. J. Z. Tomaka. The LRC—A Canadian High-Speed Diesel Train. *Rail Engineering International*, Vol. 4, No. 2, 1974, pp. 88–96.
79. Canadian Run by LRC at 205 km/h. *Railway Engineer*, Vol. 1, No. 2, 1976, pp. 45–46.
80. Uprated LRC Clinches Foothold in High-Speed Passenger Market. *Railway Gazette International*, Vol. 133, No. 9, 1977, pp. 351–353.
81. B. Fahrenwald. Canada's LRC: Low Cost, High Speed Add up to a Winner. *Railway Age*, Vol. 183, No. 15, 1982, pp. 34–35, 38–39.
82. The Gas Turbine Makes Progress. *Modern Railroads*, Vol. 2, No. 4, 1947, pp. 20–23.
83. E. C. Poultney. British Build Gas-Turbine Locomotive. *Railway Age*, Vol. 129, No. 13, 1950, pp. 22–25.
84. E. C. Poultney. British Railways Acquire a Gas-Turbine Locomotive. *Railway Age*, Vol. 132, No. 16, 1952, pp. 65–68.
85. BR Project for 150 mile/h Gas Turbine Train. *Railway Gazette*, Vol. 123, No. 8, 1967, pp. 300–301.
86. Powerful Diesel-Turbine Unit for German Federal Railway. *Railway Gazette*, Vol. 121, No. 13, 1965, pp. 523–526.
87. K. Friedrich. Gesamt-Entwurf und -Konstruktion einschliesslich der Bauvarianten V 162 und V 169. *Glasers Annalen*, Vol. 90, No. 2, 1966, pp. 57–64.
88. K. Friedrich. Vom Dieseltriebwagen und der Diesellokomotive zum Turbo-Triebfahrzeug. *Glasers Annalen*, Vol. 93, No. 7, 1969, pp. 203–210, 225.
89. B. Schmücker. Die V 210, eine Diesellokomotive mit Gasturbine. *Glasers Annalen*, Vol. 94, No. 11, 1970, pp. 344–353.
90. D. Zboralski and W. Furst. Gasturbinen treiben Triebzüge der Deutschen Bundesbahn. *Glasers Annalen*, Vol. 94, Nos. 11, 12, 1970, pp. 354–361, 397–406.
91. Gas Turbine Conversion Doubles Power Car Rating. *Railway Gazette International*, Vol. 127, No. 6, 1971, pp. 240–241.
92. G. Brauer. Gasturbinen als Hauptantrieb in Triebzügen. *Eisenbahntechnische Rundschau*, Vol. 20, No. 11, 1971, pp. 472–475.
93. D. Zboralski. Conversion to Gas-Turbine Traction of DB TEE Train Sets. *Rail Engineering International*, Vol. 2, No. 2, 1972, pp. 70–77.
94. A. Feulner. Anwendung und Bewährung von Gasturbinen in Triebfahrzeugen der Deutschen Bundesbahn. *ZEV Glasers Annalen*, Vol. 98, No. 7/8, 1974, pp. 199–209.
95. High-Speed Gas Turbine Train by United Aircraft. *Modern Railways*, Vol. 22, No. 209, 1966, pp. 100–101.
96. Lightweight Turbine Motor Trains. *Railway Gazette*, Vol. 122, No. 13, 1966, pp. 515–519.
97. A. R. Cripe. Developing the United Aircraft Turbotrain. *Railway Gazette*, Vol. 126, No. 3, 1970, pp. 105–110.
98. F. N. Houser. Amtrak's French Connection. *Railway Age*, Vol. 174, No. 3, 1973, pp. 16–17, 27.
99. W. D. Middleton. Americanizing the Turboliner. *Railway Age*, Vol. 176, No. 7, 1975, pp. 20–21, 26–27.
100. Japan Looks at Gas Turbines. *Railway Gazette*, Vol. 126, No. 4, 1970, p. 149.
101. Y. Ishii. Development of Gas Turbine Car in Japan. *Japanese Railway Engineering*, Vol. 11, No. 3, 1970, pp. 11–13.
102. T. Nagakura. Outline of KIHA 391 Prototype Gas Turbine Railcar. *Japanese Railway Engineering*, Vol. 13, No. 3, 1972, pp. 8–12.
103. J. P. Bernard. Gas-Turbine Trains: SNCF Experience and Plans. *Rail Engineering International*, Vol. 1, No. 1, 1971, pp. 11–15.
104. J. P. Bernard. Gas Turbine Trains for the SNCF. *Railway Gazette*, Vol. 125, No. 4, 1969, pp. 129–132.
105. High-Speed Trains with Gas Turbine Traction. *Railway Gazette*, Vol. 125, No. 24, 1969, pp. 933–935.
106. J. P. Bernard. SNCF Turbos on the Move. *Railway Gazette*, Vol, 126, No. 11, 1970, pp. 412–414.
107. F. Duflot. Turbinengetriebene Züge der Französischen Staatsbahnen (SNCF). *Glasers Annalen*, Vol. 95, No. 7/8, 1971, pp. 263–270.
108. P. Gauthier and F. Barret. A Year's Operation of the Turbotrains. *French Railway Techniques*, Vol. 15, No. 4, 1972, pp. 121–130.
109. J. P. Bernard. The RTG Turbine Trains. *French Railway Techniques*, Vol. 15, No. 4, 1972, pp. 131–145.
110. J. P. Bernard. SNCF Introduces the 200 km/h RTG Turbotrain with a Set for Very High Speed Trials. *Rail Engineering International*, Vol. 3, No. 2, 1973, pp. 58–62.
111. G. Senac. Tests with Turbine Train RTG 01. *French Railway Techniques*, Vol. 17, No. 4, 1974, pp. 123–140.
112. F. Nouvion. Experimental Gas Turbine Trains. *French Railway Techniques*, Vol. 13, No. 1, 1970, pp. 14–41.
113. France Builds Experimental 300 km/h Train for Paris–Lyon. *Railway Gazette International*, Vol. 128, No. 5, 1972, pp. 172–175.
114. J. P. Bernard. TGV 001: The Precursor of the 300 km/h SNCF Programme Is Introduced. *Rail Engineering International*, Vol. 2, No. 4, 1972, pp. 166–172.
115. G. Petit. Light-Weight High-Speed Electrical Machines Developed for SNCF 300 km/h Experimental Turbo Train. *Rail Engineering International*, Vol. 2, No. 6, 1972, pp. 252–259.
116. J. P. Bernard. The Experimental Turbine Train TGV 001. *French Railway Techniques*, Vol. 16, No. 1, 1973, pp. 1–24.
117. M. Gaudichon. Der Turbotrain TGV 001 der SNCF. *ZEV Glasers Annalen*, Vol. 98, No. 6, 1974, pp. 159–170, 173.
118. W. Bode. Turbozüge. *Glasers Annalen*, Vol. 93, No. 5, 1969, pp. 133–140.
119. J. Vogts. Die Gasturbine als Antrieb in Schienenfahrzeugen. *Glasers Annalen*, Vol. 93, No. 5, 1969, pp. 141–149, 163.
120. G. Senac. 10 Years of Development Work on the Gas Turbine for Traction. *French Railway Techniques*, Vol. 22, No. 4, 1979, pp. 184–206.
121. F. Nouvion. Description des installations de traction et du matériel moteur de la SNCF aptes à la grande vitesse. *Revue Générale des Chemins de Fer*, Vol. 85, No. 3, 1966, pp. 141–159.
122. E. Gierth and K. W. Seibert. Die elektrische Co'Co'-Schnellzuglokomotive Baureihe E 03 der Deutschen Bundesbahn. *Elektrische Bahnen*, Vol. 36, No. 10, 1965, pp. 230–251.
123. E. Gierth. Die Serienlokomotive der Baureihe 103—ein weiterer Schritt zu höhen Leistungen elektrischer Lokomotiven der Deutschen Bundesbahn. *Elektrische Bahnen*, Vol. 41, No. 6, 1970, pp. 124–132.
124. H. Gluck. Die Leistungsfähigkeit der neuen Schnellfahrlokomotiven Baureihe 103 der Deutschen Bundesbahn. *Glasers Annalen*, Vol. 94, No. 7, 1970, pp. 227–232.
125. M. Manzo. Stabilità di marcia alle alte velocità: La nuova locomotiva E 444. *Ingegneria Ferroviaria*, Vol. 23, No. 7/8, 1968, pp. 541–554.
126. C. Bologmin. Italian Railways BoBo of 4000 kW for 200 km/h. *Rail Engineering International*, Vol. 1, No. 5, 1971, pp. 202–208.
127. W. Messerschmidt. Die Nachbau-Serie der italienischen Schnellfahrlokomotive E 444 (Bo'Bo') und ihre Weiterentwicklung zur E 666 (Co'Co'). *Glasers Annalen*, Vol. 95, No. 11, 1971, pp. 368–370.
128. D. Piscaglia and M. Cavagnaro. La locomotiva elettrica a chopper E 444.005 delle FS. *Ingegneria Ferroviaria*, Vol. 31, No. 1, 1976, pp. 5–14.
129. M. Cavagnaro and D. Piscaglia. FS Powerful Prototype with Choppers. *Railway Engineer*, Vol. 1, No. 5, 1976, pp. 33–37.
130. A. Cogliati et al. The Experimental 3000 V D.C. Locomotive of the Italian State Railways with Chopper Control. *Brown Boveri Review*, Vol. 63, No. 12, 1976, pp. 737–743.
131. Skoda Develops a Second Generation of Electric Locomotives. *Railway Gazette International*, Vol. 130, No. 6, 1974, pp. 221–223.
132. Skoda Builds Exports on Vigorous Home Market. *Railway Gazette International*, Vol. 136, No. 3, 1980, pp. 201–203.
133. Soviet Designers Strive To Combine Power with Reliability. *Railway Gazette International*, Vol. 138, No. 7, 1982, pp. 555–557, 559.
134. E. Becker. Electrical Equipment of the Three-Phase DB Class E 120 Universal Mainline Electric. *Rail Engineering International*, Vol. 8, No. 3, 1979, pp. 70–73.

135. DB Starts Tests with Class 120 Three-Phase Locos. *Railway Gazette International*, Vol. 135, No. 7, 1979, pp. 655–657.
136. Elektrische Lokomotive in Drehstromtechnik: Baureihe 120 der Deutschen Bundesbahn. *ZEV Glasers Annalen*, Vol. 103, No. 7/8, 1979, pp. 312–313.
137. J. Körber. Die elektrische Ausrüstung der Hochleistungslokomotive Baureihe E 120 der Deutschen Bundesbahn mit Drehstromfahrmotoren. *ZEV Glasers Annalen*, Vol. 104, No. 8/9, 1980, pp. 299–308.
138. M. Niessen. Versuchsschnellfahrten mit der elektrischen Lokomotive 120001 der Deutschen Bundesbahn. *Elektrische Bahnen*, Vol. 83, Nos. 8, 12, 1985, pp. 260–262, 418–424.
139. Amtrak Orders First Batch of Northeast Corridor Thyristor Locos. *Railway Gazette International*, Vol. 134, No. 2, 1978, p. 55.
140. Amtrak bestellt acht Thyristorlokomotiven. *ZEV Glasers Annalen*, Vol. 102, No. 9, 1978, p. 274.
141. Amtrak's 200 km/h Locos Spearhead Revised Northeast Corridor Plans. *Railway Gazette International*, Vol. 135, No. 4, 1979, pp. 305–307.
142. G. Lundh. Amtrak—200 km/h in den Vereinigten Staaten mit ASEA-Thyristorlokomotiven. *ZEV Glasers Annalen*, Vol. 106, No. 2/3, 1982, pp. 85–92.
143. BR's Class 89 Takes Shape. *Railway Gazette International*, Vol. 140, No. 3, 1984, p. 185.
144. D. Boocock. Next Generation of Electric Trains Will Have 225 km/h Capability. *Railway Gazette International*, Vol. 141, No. 6, 1985, pp. 441–444.
145. Comparing Synchronous and Asynchronous Traction Motors. *Railway Gazette International*, Vol. 138, No. 6, 1982, pp. 458–459.
146. P. Hérissé. La BB 15055 à moteurs synchrones. *La Vie du Rail*, No. 1851, July 8, 1982, pp. 4–8.
147. A. Cossié. French Hail Synchronous Motor as Traction Panacea. *Railway Gazette International*, Vol. 139, No. 5, 1983, pp. 349, 351, 353.
148. P. Hérissé. Les moteurs triphasés plus que jamais d'actualité. *La Vie du Rail*, No. 1943, May 10, 1984, pp. 4–5, 7–10.
149. A. Cossié. Die Lokomotive BB 10004 mit selbstgefuhrten Synchronmotoren—Anwendung der Synchrontechnik bei der SNCF. *Elektrische Bahnen*, Vol. 82, No. 7, 1984, pp. 194–200.
150. G. Landgraf. Locomotives synchrone et asynchrone. *La Vie du Rail*, No. 1980, Feb. 7, 1985, p. 55.
151. Proposed Class 91 Locomotive. *Modern Railways*, Vol. 42, No. 443, 1985, p. 391.
152. Electra Heralds East Coast Speed-Up. *Railway Gazette International*, Vol. 142, No. 4, 1986, pp. 267, 269.
153. Skoda Designs Three-Phase Motored Prototypes. *Railway Gazette International*, Vol. 141, No. 6, 1985, pp. 446–447.
154. Electric Trains for the New Tokaido Line. *Railway Gazette*, Vol. 121, No. 3, 1963, pp. 100–104
155. M. Ishizawa. Electric Railcars for New Sanyo Line. *Japanese Railway Engineering*, Vol. 10, No. 2, 1969, pp. 14–15.
156. K. Kasai. Shinkansen Railcars in the Future. *Japanese Railway Engineering*, Vol. 13, No. 1/2, 1972, pp. 35–38.
157. M. Ishiyama. Nationwide Shinkansen Network and Prototype Electric Railcar Multiple Unit Train. *Japanese Railway Engineering*, Vol. 13, No. 4, 1972, pp. 15–18.
158. H. Inoue. Prototype Electric Railcar (Type 961) for the Nationwide Shinkansen Network. *Japanese Railway Engineering*, Vol. 15, No. 1, 1974, pp. 4–8.
159. Series 962 Prototypes Will Be Geared for 210 km/h. *Railway Gazette International*, Vol. 134, No. 5, 1978, p. 298.
160. T. Shima. The Second Generation of the Shinkansen Train Has Made Its Debut. *Japanese Railway Engineering*, Vol. 19, No. 1, 1979, pp. 19–23.
161. Y. Ishii. The Course of Development of Shinkansen Cars and Future Planning. *Japanese Railway Engineering*, Vol. 19, No. 2, 1979, pp. 11–15.
162. Shinkansen Prototype Cars Type 961 Reach the Maximum Speed of 319 km/h. *Japanese Railway Engineering*, Vol. 19, No, 4, 1980, p. 35.
163. The 200 Series Shinkansen Train for the Tohoku and Joetsu Shinkansen. *Japanese Railway Engineering*, Vol. 20, No. 4, 1981, pp. 23–24.
164. T. Haga. Progress of the Shinkansen Trains in 20 Years. *Japanese Railway Engineering*, Vol. 24, No. 4, 1985, pp. 16–20.
165. K. Watanabe. Review and Perspective of the Shinkansen. *Elektrische Bahnen*, Vol. 83, No. 5, 1985, pp. 145–152.
166. C. Suda. Air Competition Forces JNR Speed-Up. *Railway Gazette International*, Vol. 142, No. 9, 1986, pp. 636–639.
167. W. Rappengluck. Elektrischer Schnelltriebzug ET 403 der Deutschen Bundesbahn. *Elektrische Bahnen*, Vol. 44, No. 5, 1973, pp. 98–108.
168. W. Lossel et al. Die elektrische Ausrüstung des Schnelltriebzüges 403. *Elektrische Bahnen*, Vol. 44, Nos. 6, 7, 1973, pp. 118–130, 154–162.
169. Y. N. Dimant et al. Moscow–Leningrad Train Set Designed for 200 km/h. *Railway Gazette International*, Vol. 127, No. 4, 1971, pp. 145–148.
170. J. Dimant and V. Zhiva. Der elektrische Schnelltriebzug ER 200 für die Eisenbahnen der USSR. *ZEV Glasers Annalen*, Vol. 96, No. 11, 1972, pp. 343–350.
171. Y. Dimant and V. Zhiva. Riga's 200 km/h EMU Ready for Moscow–Leningrad Line. *Railway Gazette International*, Vol. 131, No. 6, 1975, pp. 220–222.
172. J.-M. Metzler. The 'Pre-production TGV Train Sets a Few Months Before Delivery. *French Railway Techniques*, Vol. 21, No. 3, 1978, pp. 187–192.
173. Electric TGVs Spotlight French Lead in High-Speed Technology. *Railway Gazette International*, Vol. 134, No. 12, 1978, pp. 967–970.
174. Les TGV rames automotrices électriques à grande vitesse de la SNCF. *La Vie du Rail*, No. 1682, Feb. 25, 1979, pp. 8–19, 62–63.
175. The TGV High Speed Train Sets for the New Paris-Southeast Line. *French Railway Techniques*, Vol. 22, No. 3, 1979, pp. 109–114.
176. J. C. Brimont. Les rames TGV pour la nouvelle ligne Paris—Sud-Est. *ZEV Glasers Annalen*, Vol. 104, No. 12, 1980, pp. 419–424.
177. TGV Hits 380 km/h in Record-Breaking Run. *Railway Gazette International*, Vol. 137, No. 4, 1981, p. 263.
178. A. Cossié. Conception générale et caractéristiques des parties électriques des rames TGV. *Elektrische Bahnen*, Vol. 79, No. 10, 1981, pp. 361–367.
179. L. Gauthier and J. Waleckx. Sistema di trasmissione dei treni francesi ad alta velocità. *Ingegneria Ferroviaria*, Vol. 40, No. 6, 1985, pp. 349–351.
180. B. Jouy. Conception et réalisation des moteurs du TGV. *Revue Générale de l'Électricité*, Vol. 65, No. 2, 1981, pp. 129–133.
181. France's Second High Speed Line at Crucial Stage. *Railway Gazette International*, Vol. 139, No. 9, 1983, pp. 683–684.
182. F. Lacote. Second Generation TGVs Raise Speed and Comfort Standards. *Railway Gazette International*, Vol. 142, No. 12, 1986, pp. 885–888.
183. H.-D. Eisbrecher et al. DE 2500 UmAn 202 003-0—Ein Erprobungsträger für Hochgeschwindigkeits-Triebdrehgestelle. *ZEV Glasers Annalen*, Vol. 107, No. 5, 1983, pp. 131–138.
184. Germans Revise Design of High Speed Test Train. *Railway Gazette International*, Vol. 139, No. 11, 1983, pp. 848–849.
185. H. R. Kurz. Der Hochgeschwindigkeits-Versuchszug Intercity-Experimental: Fortschritt bei Entwicklung und Fertigung. *Eisenbahntechnische Rundschau*, Vol. 33, No. 12, 1984, pp. 899–902, 905–906, 908.
186. D. Lübke. ICE Poised To Start Running Tests. *Railway Gazette International*, Vol. 141, No. 3, 1985, pp. 186–189.
187. ICE Unveiled by Thyssen Henschel. *Railway Gazette International*, Vol. 141, No. 4, 1985, p. 282.
188. H. Kurz. Die Konzeption für den Hochgeschwindigkeitszug Intercity-Experimental (ICE). *Elektrische Bahnen*, Vol. 83, No. 5, 1985, pp. 138–140, 142–144.
189. C. E. Krull and K.-H. Garre. Intercity-Express (ICE). *Elektrische Bahnen*, Vol. 83, No. 10, 1985, pp. 313–318.
190. P. Falk et al. Die elektrische Ausrüstung der ICE-Triebköpfe. *Elektrische Bahnen*, Vol. 83, No. 10, 1985, pp. 319–334.

191. U. Budde et al. Entwicklung des mechanischen Teils der ICE-Triebköpfe. *Elektrische Bahnen*, Vol. 83, No. 10, 1985, pp. 335–338, 340–344.
192. R. Schumann. Moderne Eisenbahnantriebe am Beispiel des ICE. *Antriebstechnik*, Vol. 25, No. 8, 1986, pp. 23–24, 26, 28–29.
193. ASEA To Build SJ Tilting Trainsets. *Railway Gazette International*, Vol. 142, No. 10, 1986, p. 691.
194. *The Swedish High Speed Train*. ASEA Traction brochure, undated.
195. Three-Phase Motor Built into Hollow Axle. *Railway Gazette International*, Vol. 131, No. 11, 1975, p. 433.
196. R. Stokes. Three-Phase Traction: Problems and Prospects. *Railway Gazette International*, Vol. 132, No. 11, 1976, pp. 418–422.
197. I. P. Isaew and A. S. Kurbassow. Die Entwicklung des Antriebes von elektrischen Triebfahrzeugen. *Elektrische Bahnen*, Vol. 84, No. 3, 1986, pp. 85–91.
198. Aerotrain Prototype Is Completed. *Railway Gazette*, Vol. 125, No. 19, 1969, pp. 747–748.
199. The Way Ahead for Tracked Hovercraft. *Railway Gazette International*, Vol. 127, No. 6, 1971, pp. 229–232.
200. T. G. Fellows. High Speed Surface Transport. *Railway Engineering Journal*, Vol. 3, No. 2, 1974, pp. 4–20.
201. K. D. E. Crawford. Electronic Control of Spin and Slide. *Railway Gazette International*, Vol. 127, No. 4, 1971, pp. 140–142.
202. Pueblo Paves the Way for Guided Transport. *Railway Gazette International*, Vol. 127, No. 10, 1971, pp. 399–400.
203. Air Cushions and Maglev. *Railway Gazette International*, Vol. 129, No. 9, 1973, pp. 340–343.
204. G. P. Kalman. Linear Motors To Power DOT's High-Speed Research Vehicles. *Railway Gazette International*, Vol. 130, No. 10, 1974, pp. 378–383.
205. D. S. Armstrong. Application of the Linear Motor to Transport. *Railway Gazette*, Vol. 123, No. 4, 1967, pp. 145–150.
206. H. Autruffe. Le moteur linéaire. *Revue Générale des Chemins de Fer*, Vol. 87, No. 4, 1968, pp. 209–218.
207. H. Autruffe. Le moteur linéaire. *Revue Générale des Chemins de Fer*, Vol. 90, No. 6, 1971, pp. 438–450.
208. H. Autruffe et al. Les études de sustentation magnétique à la SNCF. *Revue Générale des Chemins de Fer*, Vol. 94, No. 9, 1975, pp. 497–522.
209. H. Yamashita. Repulsive Levitation and Propulsion. *RTRI* (Japan) *Quarterly Reports*, Vol. 17, No. 4, 1976, pp. 157–165.
210. Motor lineal y sustentación magnética en la R.F. Alemana. *Revista AIT*, No. 30, Nov.–Dec. 1979, pp. 19–22.
211. Y. Kyotani et al. Motor lineal y sustentación magnética en Japón. *Revista AIT*, No. 30, Nov.–Dec. 1979, pp. 55–56.
212. J.-P. Pascal. Le moteur linéaire de Jean Guimbal. *Revue Générale des Chemins de Fer*, Vol. 99, No. 1, 1980, pp. 3–8.
213. D. Lancien and R. Moulin. Caractéristiques et développement des systémes de transport à sustentation magnétique en 1980. *Revue Générale des Chemins de Fer*, Vol. 99, No. 11, 1980, pp. 633–646.
214. C.-P. Parsch and H.-G. Raschbichler. Der eisenbehaftete synchrone Langstatormotor für die Transrapid Versuchsanlage Emsland (TVE). *ZEV Glasers Annalen*, Vol. 105, No. 7/8, 1981, pp. 225–232.
215. P.-J. Gaede. Magnetbahntechnik mit Kurzstatorantrieb. *ZEV Glasers Annalen*, Vol 105, No. 7/8, 1981, pp. 252–255.
216. L. Miller. Magnetfahrtechnik mit synchronem bzw. asynchronem Kurzstator-Linearantrieb. *ZEV Glasers Annalen*, Vol. 105, No. 7/8, 1981, pp. 256–260.
217. C. P. Parsch and G. Ciessow. Die Antriebsausrüstung des Transrapid 06 mit eisenbehafteten synchronen Langstatormotor. *Elektrische Bahnen*, Vol. 79, No. 8, 1981, pp. 290–295.
218. T. Azukizawa. Optimum Linear Synchronous Motor Design for High Speed Ground Transportation. *IEEE Transactions on Power Apparatus and Systems*, Vol. 102, No. 10, 1983, pp. 3306–3314.
219. E. Eitlhuber. Transrapid 06 und sein Antriebssystem. *Eisenbahntechnische Rundschau*, Vol. 33, No. 6, 1984, pp. 501–504, 506.
220. Internationale Magnetbahnkonferenz in Solihull. *Eisenbahntechnische Rundschau*, Vol. 33, Nos. 11, 12, 1984, pp. 875–876, 949–952.
221. Y. Usemi. Superconducting Magnet Levitation/Propulsion Test Vehicle. *RTRI* (Japan) *Quarterly Reports*, Vol. 15, No. 2, 1974, pp. 62–68.
222. S. Fujiwara. Characteristics of Propulsion System of the Magnetic Levitation Vehicle Named ML 100. *RTRI* (Japan) *Quarterly Reports*, Vol. 16, No. 2, 1975, pp. 77–78.
223. Year of Progress for Japan's Three Maglev Projects. *Railway Gazette International*, Vol. 133, No. 6, 1977, pp. 232–234.
224. S. Nishi and T. Iwahana. Test Results Concerning Vehicle and Devices. *Japanese Railway Engineering*, Vol. 19, No. 1, 1979, pp. 14–18.
225. K. Miyazaki. The Magnetic Levitation Railway. *Japanese Railway Engineering*, Vol. 20, No. 4, 1981, pp. 2–5.
226. Japon: le développement de la sustentation magnétique. *Revue Générale des Chemins de Fer*, Vol. 100, No. 6, 1981, p. 368.
227. H. Tanaka. Present Conditions of Maglev Test in JNR. *Japanese Railway Engineering*, No. 96, Dec. 1985, pp. 8–11.
228. K. Mandt. Measuring and Control System for Testing New Components for Guided Transportation Systems. *Siemens Review*, Vol. 41, No. 12, 1974, pp. 527–532.
229. H.-G. Raschbichler. Development Tendencies of the Electromagnetic Levitation Techniques for Application in High-Speed Traffic Systems. *Thyssen Technische Berichte*, No. 1, 1979, pp. 1–15.
230. Demonstrationsanlage für Magnetschwebetechnik zur Internationalen Verkehrsausstellung (IVA) 1979. *Eisenbahntechnische Rundschau*, Vol. 28, No. 4, 1979, pp. 281–292.
231. P. Schwarzler et al. Transrapid 06—Fahrzeugkonzept. *ZEV Glasers Annalen*, Vol. 105, No. 7/8, 1981, pp. 216–224.
232. Transrapid Halfway to Target Speed. *Railway Gazette International*, Vol. 140, No. 7, 1984, pp. 538–539.
233. C. de Paux-Courrouges and J.-M. Willigens. Le "Transrapid" en bout de piste. *La Vie du Rail*, No. 1957, Aug. 30, 1984, pp. 9–12.

Publication of this paper sponsored by Committee on Rail Electrification Systems.

Interim Method of Maintenance Management for U.S. Army Railroad Track Network

D. R. UZARSKI AND D. E. PLOTKIN

The U.S. Army Construction Engineering Research Laboratory has developed an interim railroad track maintenance management system called RAILER I. Intended for use by engineers, technicians, and planners at U.S. Army installations, RAILER I serves as a decision support tool for identifying physical track assets, inspecting and evaluating track, identifying work needs, and planning and priority setting. RAILER I will be incorporated into a fully capable RAILER II system in approximately 2 years. RAILER I consists of two distinct portions: (a) established procedures and methods for collecting pertinent field and office information and (b) computer software for processing the information so that it can be easily used in network- and project-level decision making. Information collected includes installation information; track segment inventory; inspection, traffic, maintenance, and repair costs; and work history. Specific RAILER I procedures outline what needs to be collected and when. The microcomputer software has been programmed for operation on IBM XT, AT, or compatible systems. The programs are menu driven for ease of use. A variety of report options is available for reporting stored information. Programming permits an analysis of inspection data.

U.S. Army engineers, technicians, and maintenance planners face many questions concerning their railroad track networks. Questions continuously arise about determining what work must be accomplished to meet mission needs, how much it will cost, how work should be priority ranked for planning and budgeting purposes, and the effects of deferring maintenance and repair.

The answers are expected to come from engineering and local experience, a common practice in the commercial railroad sector. However, where experience is lacking, time constraints limit the effort that can be devoted to facility maintenance and repair planning. When other facilities take precedence, decisions are often made without knowledge of the consequences. Premature deterioration of track, accelerated or excessive costs, mission impairment, or all three, may result.

These problems are being addressed through a U.S. Army Construction Engineering Research Laboratory–developed railroad maintenance management system called RAILER. When the system is completed, installation personnel of the Directorate of Engineering and Housing (DEH) will be able to better understand and control the condition of their railroad track.

The idea behind the RAILER system is to provide effective and efficient management of U.S. Army track networks by using systematic procedures. The end result will be that appropriate portions of the network are maintained to an optimum level of condition, at the least possible cost, consistent with the mission. As a decision support tool, RAILER helps the user to (a) locate and identify physical assets, (b) assess conditions, (c) determine maintenance and repair (M&R) needs, and (d) plan and priority rank M&R work.

To accomplish this, RAILER includes standardized inventory, inspection, and other field and office data collection and analysis procedures based on sound civil, railroad, maintenance, and facilities engineering practice. RAILER also has a completely user-oriented microcomputer software package for data storage, reporting, and analysis.

RAILER consists of two generations: RAILER I (*1*), an interim system needed now to support an ongoing, centrally funded, major track rehabilitation program, and RAILER II, a fully capable system scheduled for release within the next 2 years. This paper focuses on RAILER I.

By design, RAILER I lacks some of the data elements and many of the analysis and cost-estimating features planned for RAILER II. It does, however, serve the basic requirement of providing a quick determination of whether or not existing track conditions meet critical portions and levels of the current Army railroad track standards (*2*). When it is combined with inventory and traffic information (*3, 4*), RAILER I makes it possible for installation personnel to develop meaningful annual and long-range work plans.

RAILER I is designed to be fully compatible with RAILER II so that a later conversion can be developed.

BACKGROUND

More than 100 U.S. Army installations have railroad track. Some have fairly active track networks and others experience only infrequent traffic movements. Network sizes range from less than 1 to more than 200 track miles per installation. Also, track conditions and maintenance practices vary widely. A common feature, however, is that the vast majority of this track is needed for mobilization readiness. These networks must be able to sustain large volumes of heavy traffic on, potentially, quite short notice. Thus an adequate but econom-

---

U.S. Army Construction Engineering Research Laboratory, P.O. Box 4005, Champaign, Ill. 61820.

ical maintenance program is necessary. RAILER is intended to be a decision support tool in the accomplishment of that task.

NETWORK DIVISION AND LOCATION REFERENCING

The first step in using the RAILER system is to break the railroad network into logical pieces. Branches of the network are designated as separate tracks, and tracks are divided into management units called track segments. Tracks and track segments are assigned their own identification numbers (Figure 1), as are all turnouts and curves in the network. In the RAILER system, the track segment is the basis for the collection and reporting of most information.

In addition to identifying tracks and track segments, there is a need to establish a system for locating points anywhere on the railroad network. This is done by applying standard surveyor's stationing to each track. Thus any point may be specified by its track number and station location. Station location markers are permanently affixed every 200 ft. This is discussed in greater detail elsewhere (*1–3*).

INVENTORY PROCEDURES

When the network has been divided and stationed, the next step is to collect inventory information. This one-time process consists of gathering information about the basic physical and operational characteristics of the railroad. Information is collected generally for the network as a whole and specifically for each track segment. The various RAILER I inventory elements are addressed more completely elsewhere (*1, 3, 4*). The inventory elements for RAILER II are still undergoing refinement.

TRACK INSPECTION

The inspection process requires that certain observations and measurements be made along the track and roadway and recorded on standard forms. This information is then fed into the RAILER I computer program, which compares it with the criteria established in the Army railroad track standards (2). The RAILER I program will note any defective conditions and determine the relative severity of those defects. The resulting list of defects is then categorized according to the five established condition levels: No Defects, No Restrictions, 10 mph, 5 mph, and No Operation.

The visual inspection forms are designed to guide the inspector through the inspection process, and are intended for use with the RAILER I computer program. When information is being entered into the computer, the screen format follows the form format. Figures 2–4 show tie, vegetation, and turnout inspection forms, respectively.

In the RAILER I system, inspection forms often use "number of occurrences" for reporting observations. An occurrence will have one of two interpretations. Using the tie inspection form (Figure 2) as an example, single, specific, "countable" observations (such as defective ties) are recorded each time that observation is made. For vegetation inspection (Figure 3), this occurrence definition is applied differently. In this case, there may be long, continuous conditions that need to be noted. In such cases, an occurrence is any observation of the condition within the previously stationed 200-ft interval. If the condition extends past a 200-ft mark, then a second (or third, etc.) occurrence is recorded.

In addition to visual inspection, the RAILER I system allows for input from an automated track geometry collection system. The data from the measuring system are copied to a standard $5\frac{1}{4}$-in. computer disk, which is then read by the RAILER I program. The RAILER I data base retains those values that fall outside of specified limits. The results from an

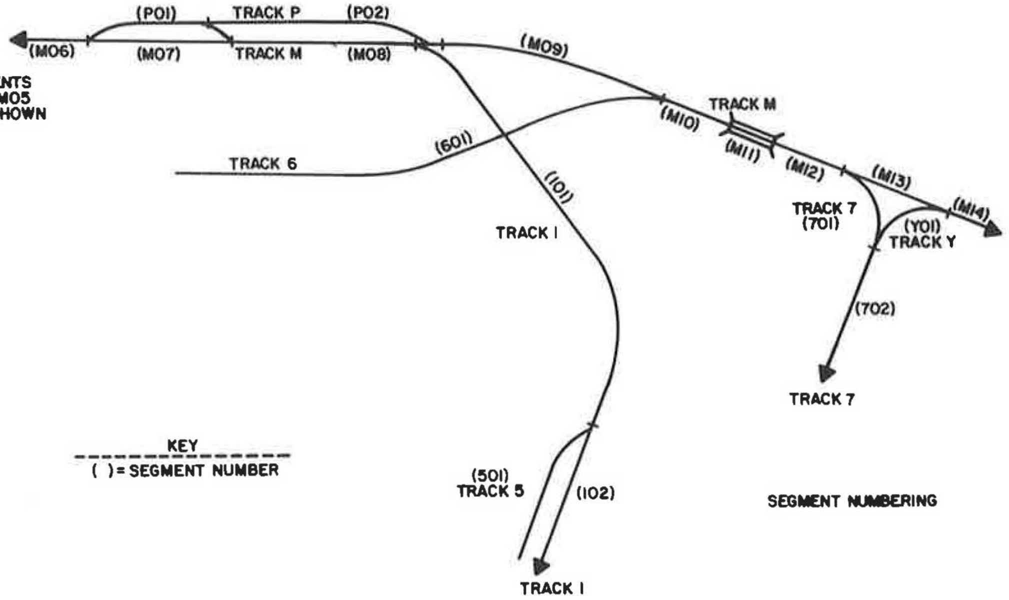

FIGURE 1 Track and segment numbering.

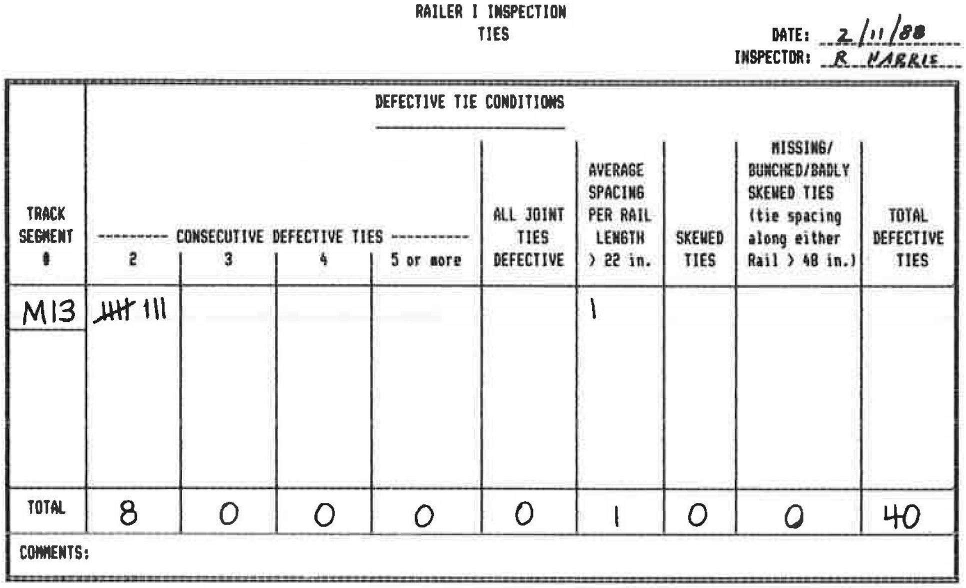

RAILER I INSPECTION
TIES

DATE: 2/11/88
INSPECTOR: R HARRIS

TRACK SEGMENT #	DEFECTIVE TIE CONDITIONS								
	CONSECUTIVE DEFECTIVE TIES				ALL JOINT TIES DEFECTIVE	AVERAGE SPACING PER RAIL LENGTH > 22 in.	SKEWED TIES	MISSING/ BUNCHED/BADLY SKEWED TIES (tie spacing along either Rail > 48 in.)	TOTAL DEFECTIVE TIES
	2	3	4	5 or more					
M13	𝍸 III					|			
TOTAL	8	0	0	0	0	1	0	0	40

COMMENTS:

FIGURE 2 Tie inspection form.

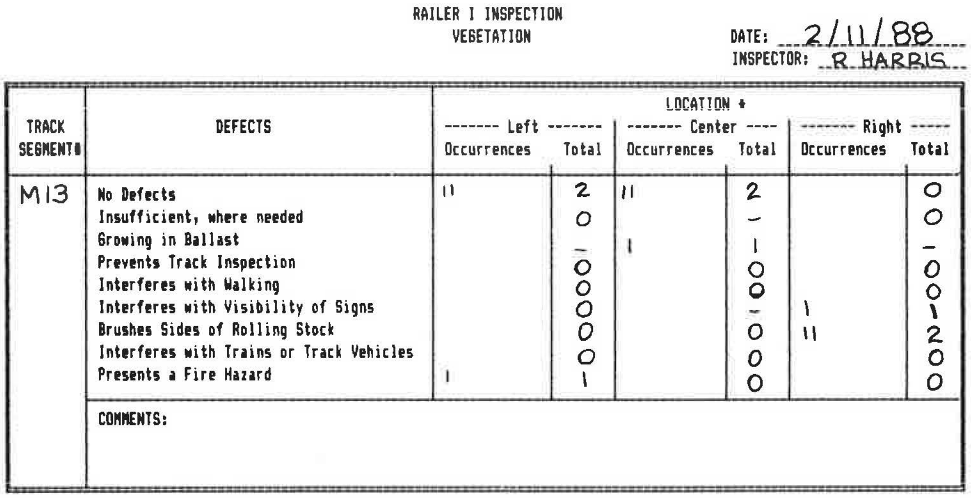

RAILER I INSPECTION
VEGETATION

DATE: 2/11/88
INSPECTOR: R HARRIS

TRACK SEGMENT#	DEFECTS	LOCATION *					
		Left		Center		Right	
		Occurrences	Total	Occurrences	Total	Occurrences	Total
M13	No Defects	II	2	II	2		0
	Insufficient, where needed		0		–		0
	Growing in Ballast		–	I	1		–
	Prevents Track Inspection		0		0		0
	Interferes with Walking		0		0		0
	Interferes with Visibility of Signs		0		–	I	1
	Brushes Sides of Rolling Stock		0		0	II	2
	Interferes with Trains or Track Vehicles		0		0		0
	Presents a Fire Hazard	I	1		0		0

COMMENTS:

FIGURE 3 Vegetation inspection form.

internal rail defect inspection can also be put into the RAILER I data base.

OTHER FIELD AND OFFICE DATA

In addition to inventory and inspection data, the RAILER I system also handles information about the types of cars and tonnage normally run over the network. Also, within the data base, there are places to store information about planned and completed maintenance and repair work for each track segment.

COMPUTER ENVIRONMENT

RAILER I is microcomputer based, and the hardware requirements include an IBM-XT, AT, or 100 percent compatible microcomputer; a 20-megabyte hard disk; 640K RAM; and a dot matrix 80-column printer (with IBM standard character set).

Computer programming links the data elements to the decision support applications. The computer programs are built on the R:Base 5000 relational data base management system. This makes possible a flexible approach to data entry and report generation. A knowledge of R:Base 5000 is not needed because RAILER I is menu driven.

Figure 5 shows the main data base structure of RAILER I. Within each box the data elements are organized according to the groups described earlier. Figure 6 shows the basic decision tree/menu structure available to the user for creating, altering, manipulating, and reporting this data base. A complete description of the computer operations has been published (5).

After the data have been entered and automatically manipulated within the computer, they are available through reports

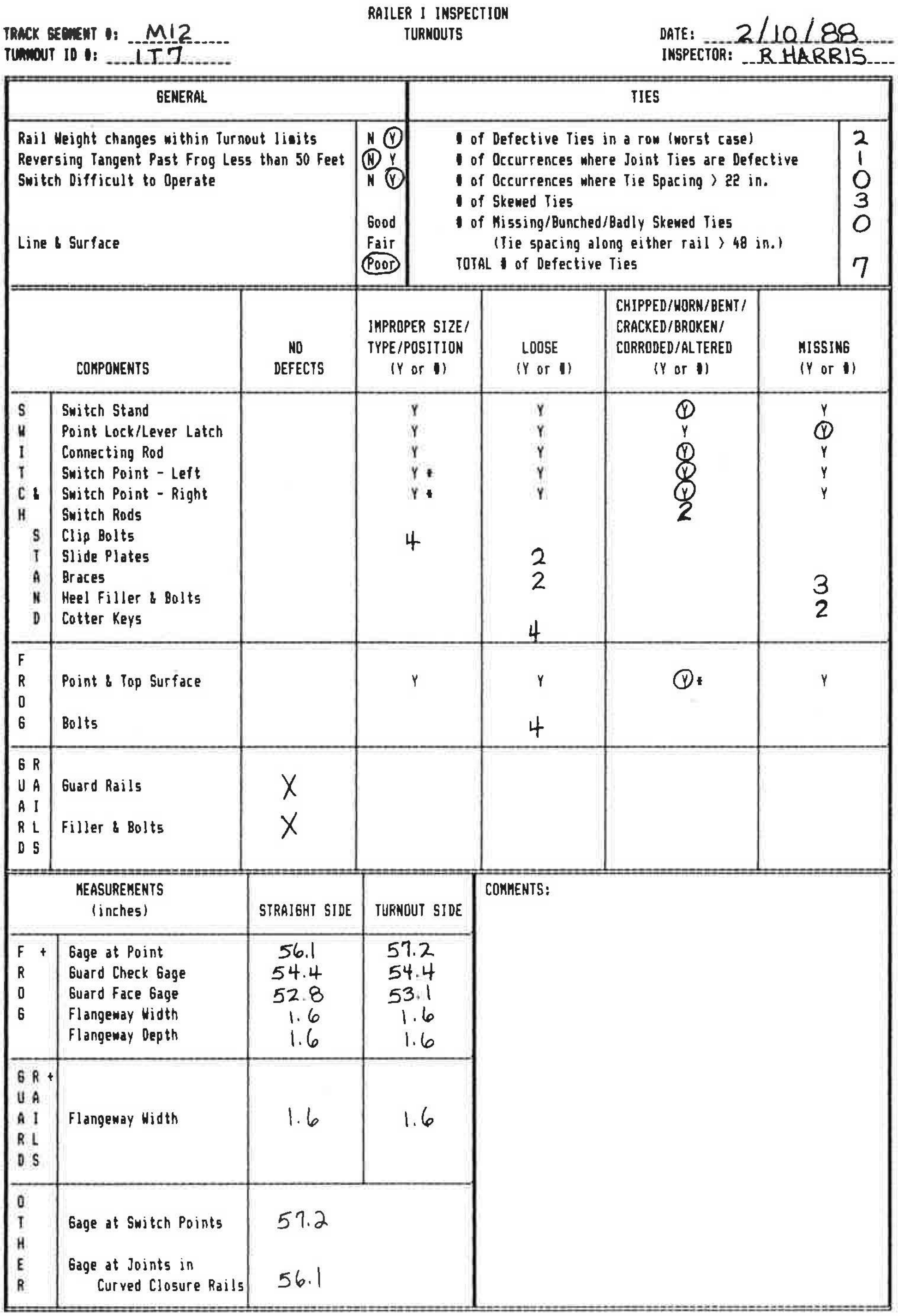

RAILER I INSPECTION
TURNOUTS

TRACK SEGMENT #: M12
TURNOUT ID #: 1T7
DATE: 2/10/88
INSPECTOR: R HARRIS

GENERAL		TIES	
Rail Weight changes within Turnout limits	N [✓ Y]	# of Defective Ties in a row (worst case)	2
Reversing Tangent Past Frog Less than 50 Feet	[✓ N] Y	# of Occurrences where Joint Ties are Defective	1
Switch Difficult to Operate	N [✓ Y]	# of Occurrences where Tie Spacing > 22 in.	0
		# of Skewed Ties	3
	Good	# of Missing/Bunched/Badly Skewed Ties	0
Line & Surface	Fair	(Tie spacing along either rail > 48 in.)	
	[✓ Poor]	TOTAL # of Defective Ties	7

	COMPONENTS	NO DEFECTS	IMPROPER SIZE/ TYPE/POSITION (Y or #)	LOOSE (Y or #)	CHIPPED/WORN/BENT/ CRACKED/BROKEN/ CORRODED/ALTERED (Y or #)	MISSING (Y or #)
SWITCH & STAND	Switch Stand		Y	Y	[✓ Y]	Y
	Point Lock/Lever Latch		Y	Y	Y	[✓ Y]
	Connecting Rod		Y	Y	[✓ Y]	Y
	Switch Point - Left		Y *	Y	[✓ Y]	Y
	Switch Point - Right		Y *	Y	[✓ Y]	Y
	Switch Rods				2	
	Clip Bolts		4			
	Slide Plates			2		
	Braces			2		3
	Heel Filler & Bolts					2
	Cotter Keys			4		
FROG	Point & Top Surface		Y	Y	[✓ Y] *	Y
	Bolts			4		
GUARD RAILS	Guard Rails	X				
	Filler & Bolts	X				

MEASUREMENTS (inches)		STRAIGHT SIDE	TURNOUT SIDE
FROG +	Gage at Point	56.1	57.2
	Guard Check Gage	54.4	54.4
	Guard Face Gage	52.8	53.1
	Flangeway Width	1.6	1.6
	Flangeway Depth	1.6	1.6
GUARD RAILS +	Flangeway Width	1.6	1.6
OTHER	Gage at Switch Points	57.2	
	Gage at Joints in Curved Closure Rails	56.1	

COMMENTS:

FIGURE 4 Turnout inspection form.

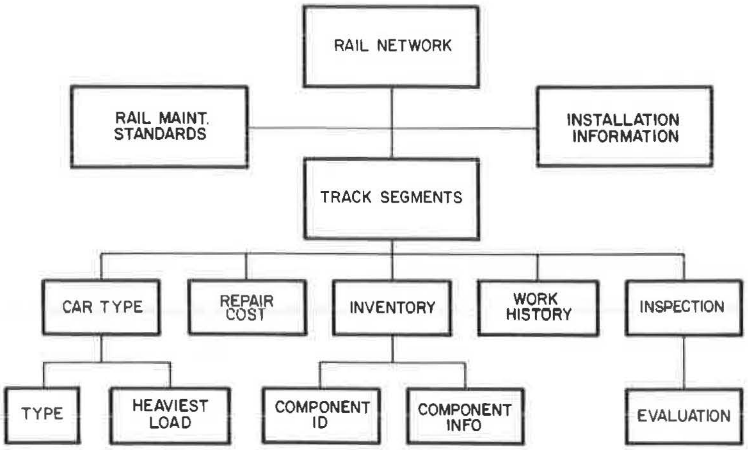

FIGURE 5 RAILER I data base diagram.

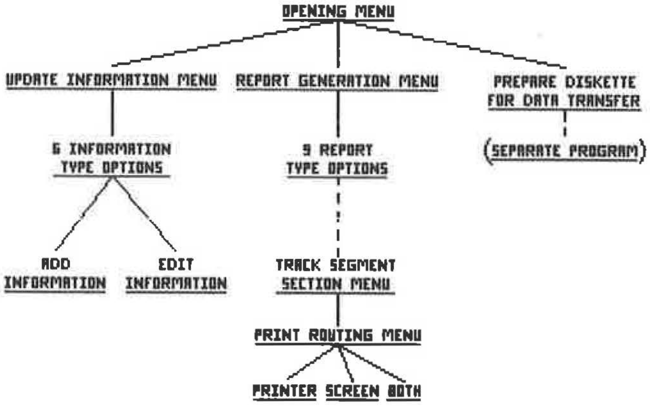

FIGURE 6 Menu routing diagram.

for decision support applications. The strength of RAILER I as a decision support tool is largely a function of the flexibility and ease with which reports are generated even by users with very limited microcomputer experience. The opening screen and the report generation menu are shown in Figures 7 and 8.

RAILER I REPORTS AND MAINTENANCE MANAGEMENT

Network- and Project-Level Management

Network-level management consists of activities associated with the installation track network as a whole. This consists primarily of the development of a multiyear work plan. Activities include inspection, condition evaluation, work identification, priority ordering of work, and budgeting.

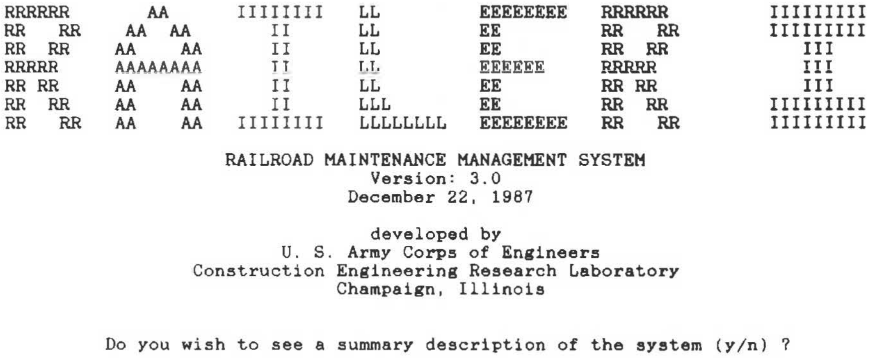

```
RRRRRR       AA      IIIIIIII  LL        EEEEEEEE  RRRRRR        IIIIIIIII
RR   RR    AA  AA       II     LL        EE        RR   RR       IIIIIIIII
RR  RR    AA    AA      II     LL        EE        RR  RR           III
RRRRR     AAAAAAAA      II     LL        EEEEEE    RRRRR            III
RR RR     AA    AA      II     LL        EE        RR RR            III
RR  RR    AA    AA      II     LLL       EE        RR  RR        IIIIIIIII
RR   RR   AA    AA   IIIIIIII  LLLLLLLL  EEEEEEEE  RR   RR       IIIIIIIII

                  RAILROAD MAINTENANCE MANAGEMENT SYSTEM
                              Version: 3.0
                           December 22, 1987

                              developed by
                      U. S. Army Corps of Engineers
                 Construction Engineering Research Laboratory
                           Champaign, Illinois

       Do you wish to see a summary description of the system (y/n) ?
```

FIGURE 7 Title screen.

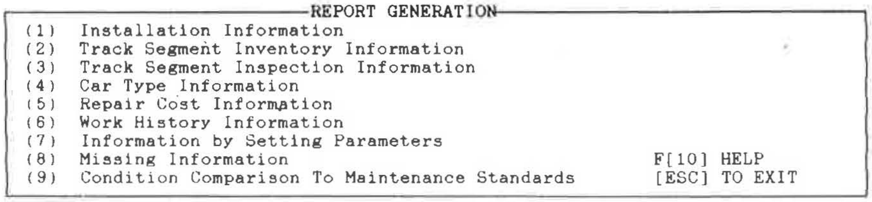

```
-----------------------------REPORT GENERATION----------------------------------
 (1)  Installation Information
 (2)  Track Segment Inventory Information
 (3)  Track Segment Inspection Information
 (4)  Car Type Information
 (5)  Repair Cost Information
 (6)  Work History Information
 (7)  Information by Setting Parameters
 (8)  Missing Information                                     F[10] HELP
 (9)  Condition Comparison To Maintenance Standards           [ESC] TO EXIT
```

FIGURE 8 Report generation menu.

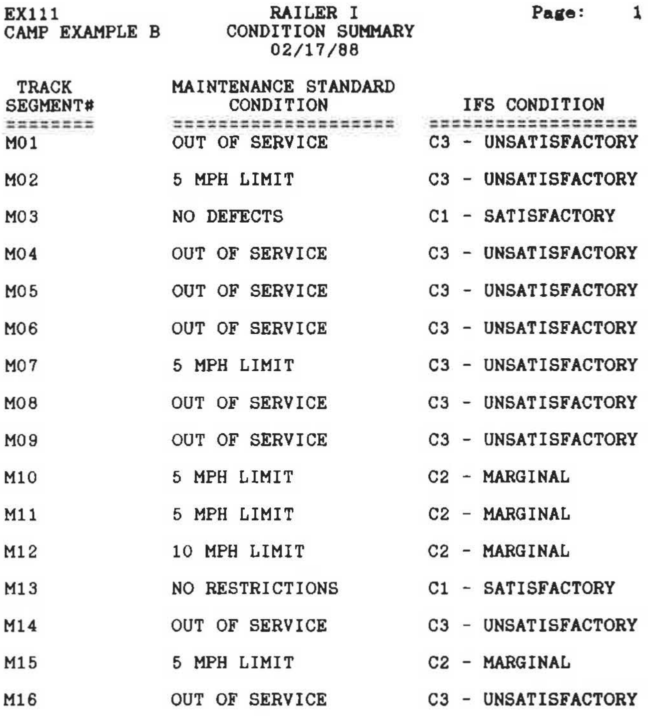

```
EX111                RAILER I                 Page:    1
CAMP EXAMPLE B    CONDITION SUMMARY
                      02/17/88

 TRACK         MAINTENANCE STANDARD
SEGMENT#            CONDITION              IFS CONDITION
========       ====================     ===================
M01            OUT OF SERVICE           C3 - UNSATISFACTORY

M02            5 MPH LIMIT              C3 - UNSATISFACTORY

M03            NO DEFECTS               C1 - SATISFACTORY

M04            OUT OF SERVICE           C3 - UNSATISFACTORY

M05            OUT OF SERVICE           C3 - UNSATISFACTORY

M06            OUT OF SERVICE           C3 - UNSATISFACTORY

M07            5 MPH LIMIT              C3 - UNSATISFACTORY

M08            OUT OF SERVICE           C3 - UNSATISFACTORY

M09            OUT OF SERVICE           C3 - UNSATISFACTORY

M10            5 MPH LIMIT              C2 - MARGINAL

M11            5 MPH LIMIT              C2 - MARGINAL

M12            10 MPH LIMIT             C2 - MARGINAL

M13            NO RESTRICTIONS          C1 - SATISFACTORY

M14            OUT OF SERVICE           C3 - UNSATISFACTORY

M15            5 MPH LIMIT              C2 - MARGINAL

M16            OUT OF SERVICE           C3 - UNSATISFACTORY
```

FIGURE 9 Condition summary report.

Project-level management focuses primarily on determining and making final the work tasks, segment by segment, that will be accomplished under the upcoming annual work plan.

RAILER I Reports

The various reports that are used for these network- and project-level tasks are obtained by selecting the appropriate option from the report generation menu (Figure 8).

Condition Comparison with Maintenance Standards (Comparison Report)

This report consists of three options: a condition summary, a condition summary by inspection type, and a detailed comparison. The difference is the amount of detail provided. Figures 9–11 show each option. The Comparison Report is the only true RAILER I analysis report. It compares the results from the latest track segment inspection with the Army railroad track standards. The summary option also codes the track segments to the U.S. Army work management condition standard (IFS) based on track use.

At the network level, this report serves, in part, to determine the condition of the track segments and classify the work

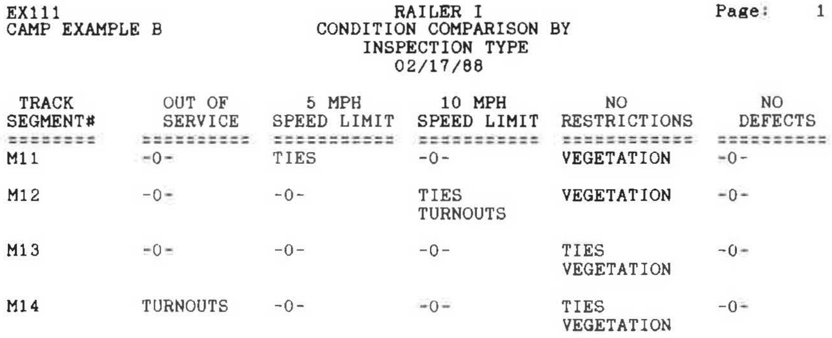

```
EX111                            RAILER I                      Page:    1
CAMP EXAMPLE B             CONDITION COMPARISON BY
                               INSPECTION TYPE
                                  02/17/88

 TRACK       OUT OF       5 MPH        10 MPH         NO            NO
SEGMENT#     SERVICE   SPEED LIMIT  SPEED LIMIT  RESTRICTIONS    DEFECTS
========   ==========  ===========  ===========  ============  ==========
M11          -0-       TIES         -0-          VEGETATION     -0-

M12          -0-       -0-          TIES         VEGETATION     -0-
                                    TURNOUTS

M13          -0-       -0-          -0-          TIES           -0-
                                                 VEGETATION

M14        TURNOUTS    -0-          -0-          TIES           -0-
                                                 VEGETATION
```

FIGURE 10 Condition comparison by inspection type report.

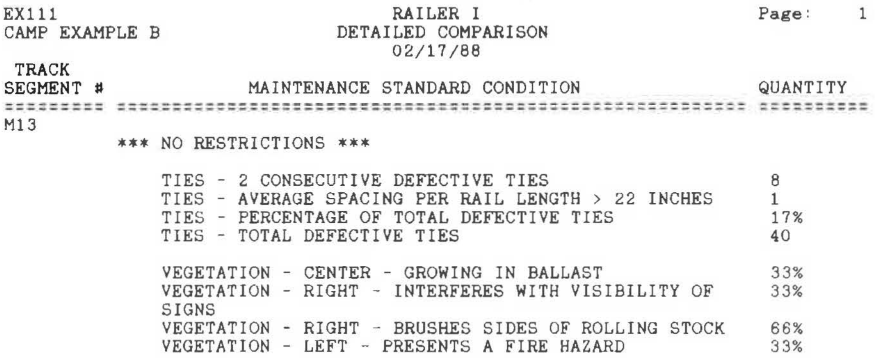

```
EX111                               RAILER I                          Page:    1
CAMP EXAMPLE B                 DETAILED COMPARISON
                                    02/17/88
 TRACK
SEGMENT #          MAINTENANCE STANDARD CONDITION                     QUANTITY
========= ========================================================= ==========
M13
          *** NO RESTRICTIONS ***

              TIES - 2 CONSECUTIVE DEFECTIVE TIES                     8
              TIES - AVERAGE SPACING PER RAIL LENGTH > 22 INCHES      1
              TIES - PERCENTAGE OF TOTAL DEFECTIVE TIES               17%
              TIES - TOTAL DEFECTIVE TIES                             40

              VEGETATION - CENTER - GROWING IN BALLAST                33%
              VEGETATION - RIGHT - INTERFERES WITH VISIBILITY OF      33%
              SIGNS
              VEGETATION - RIGHT - BRUSHES SIDES OF ROLLING STOCK     66%
              VEGETATION - LEFT - PRESENTS A FIRE HAZARD              33%
```

FIGURE 11 Detailed comparison report.

(major M&R or maintenance and minor repair). The condition summary option of the report provides a quick overview of the network condition on a track segment basis. The other report options, comparison by inspection type and detailed comparison, provide additional information on the nature and number of defects. The overall condition of each track segment as well as the types and amounts of defects present will indicate whether major M&R or maintenance and minor repair are needed.

The RAILER I track evaluation procedure is based on current, not future, conditions. RAILER I has no condition forecasting capabilities.

Another network-level task, priority ranking of work, uses the condition summary option of this report (Figure 9) if a "worst first" ranking approach is desired.

At the project level, this report enables the user to prepare work orders on specific tasks that need to be accomplished in order to raise the track segment to a given condition level.

Track Segment Inspection Information (Inspection Report)

This report (Figure 12) provides additional detailed information on the track segment. The actual results of any past inspection may be obtained. Included are visual inspection items, automated track geometry, internal rail flaw, and track deflection information. Useful at both the network and project levels, the report provides a baseline for the next inspection and detailed information for work order preparation.

Track Segment Inventory Information (Inventory Report)

This report (Figure 13) is primarily used at the project level when it is necessary to know the attributes of the various track components that make up the track segment. Included are such items as track segment length, turnout characteristics, culverts, and rail weight. Track use and category of the segment can also be obtained from this report.

Pertinent inventory information is important to developing a work order. Lengths, sizes, and other physical dimension data are needed when ordering parts and materials to match existing components.

Car Type Information (Car Type Report)

This report (Figure 14) provides information on types of cars and the tonnage that they carry. At the network level, this information is useful for performing traffic studies. At the project level, this information is needed for structural analysis of the track or when strengthening of track components (e.g., subgrade stabilization, rail weight increase) is contemplated.

Work History Information (Work History Report)

At the network level, this report is useful for performing maintenance studies. Knowing what work was accomplished

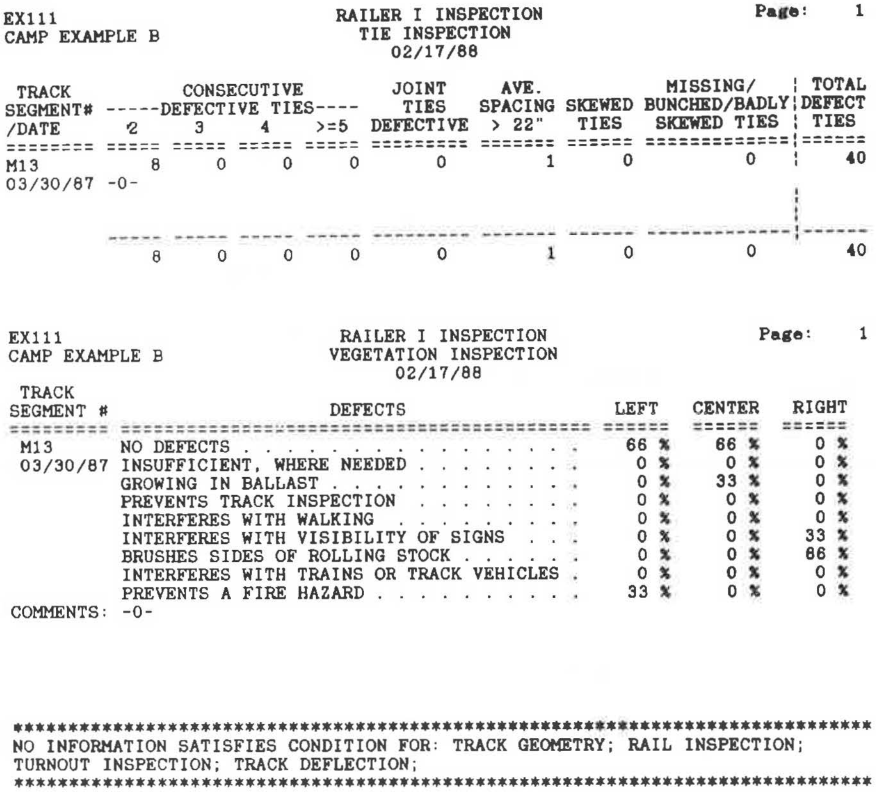

```
EX111                              RAILER I INSPECTION                     Page:     1
CAMP EXAMPLE B                        TIE INSPECTION
                                        02/17/88

 TRACK             CONSECUTIVE            JOINT     AVE.              MISSING/     | TOTAL
SEGMENT# -----DEFECTIVE TIES----          TIES    SPACING SKEWED BUNCHED/BADLY|DEFECT
/DATE      2     3     4    >=5   DEFECTIVE   > 22"   TIES    SKEWED TIES  | TIES
========= ===== ===== ===== ===== ========= ======= ====== =============|======
M13           8     0     0     0         0       1      0             0 |    40
03/30/87 -0-
                                                                           |
                                                                           |
         ----- ----- ----- ----- --------- ------- ------ -------------|------
              8     0     0     0         0       1      0             0      40


EX111                              RAILER I INSPECTION                     Page:     1
CAMP EXAMPLE B                   VEGETATION INSPECTION
                                        02/17/88
 TRACK
SEGMENT #                      DEFECTS                         LEFT    CENTER    RIGHT
========= ======================================== ======   ======   ======
 M13      NO DEFECTS . . . . . . . . . . . . . . .     66 %     66 %      0 %
 03/30/87 INSUFFICIENT, WHERE NEEDED . . . . . . .      0 %      0 %      0 %
          GROWING IN BALLAST . . . . . . . . . . .      0 %     33 %      0 %
          PREVENTS TRACK INSPECTION  . . . . . . .      0 %      0 %      0 %
          INTERFERES WITH WALKING  . . . . . . . .      0 %      0 %      0 %
          INTERFERES WITH VISIBILITY OF SIGNS  . .      0 %      0 %     33 %
          BRUSHES SIDES OF ROLLING STOCK . . . . .      0 %      0 %     86 %
          INTERFERES WITH TRAINS OR TRACK VEHICLES .    0 %      0 %      0 %
          PREVENTS A FIRE HAZARD . . . . . . . . .     33 %      0 %      0 %
COMMENTS: -0-



****************************************************************************************
NO INFORMATION SATISFIES CONDITION FOR: TRACK GEOMETRY; RAIL INSPECTION;
TURNOUT INSPECTION; TRACK DEFLECTION;
****************************************************************************************
```

FIGURE 12 Inspection report.

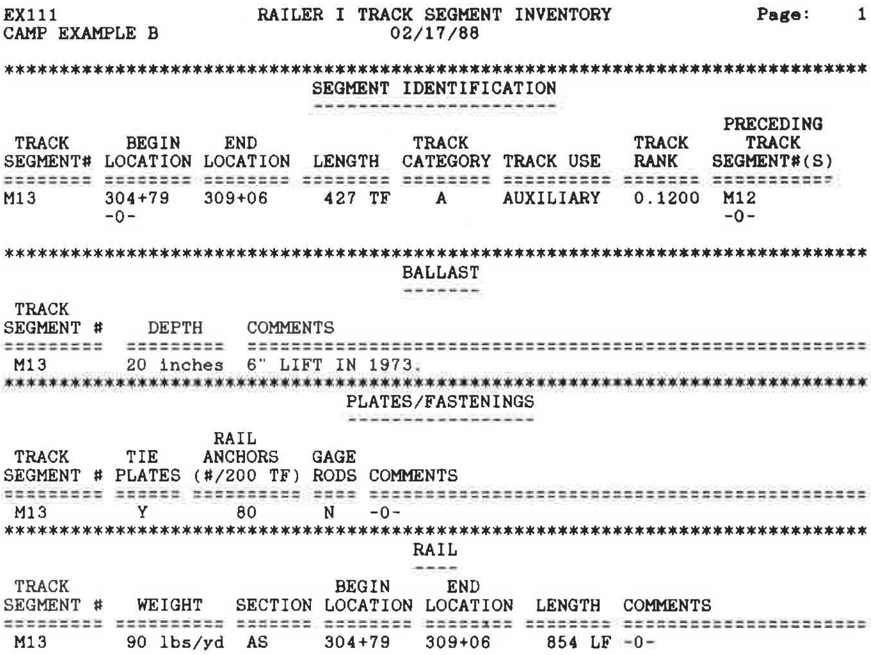

```
EX111                  RAILER I TRACK SEGMENT INVENTORY             Page:     1
CAMP EXAMPLE B                        02/17/88

*******************************************************************************
                          SEGMENT IDENTIFICATION
                          ======================
                                                                   PRECEDING
 TRACK     BEGIN    END                TRACK                TRACK    TRACK
SEGMENT# LOCATION LOCATION  LENGTH   CATEGORY TRACK USE    RANK   SEGMENT#(S)
======== ======== ======== ======== ======== ========== ======= ===========
M13      304+79   309+06     427 TF     A     AUXILIARY  0.1200  M12
         -0-                                                     -0-

*******************************************************************************
                                  BALLAST
                                  =======
 TRACK
SEGMENT #    DEPTH    COMMENTS
=========  =========  =========================================================
 M13       20 inches  6" LIFT IN 1973.
*******************************************************************************
                              PLATES/FASTENINGS
                              =================
                     RAIL
 TRACK      TIE     ANCHORS   GAGE
SEGMENT # PLATES (#/200 TF) RODS COMMENTS
========= ====== ========== ==== ==========================================
 M13        Y        80      N   -0-
*******************************************************************************
                                    RAIL
                                    ====
 TRACK                        BEGIN     END
SEGMENT #   WEIGHT   SECTION LOCATION LOCATION  LENGTH  COMMENTS
========= ========== ======= ======== ======== ======== =====================
 M13       90 lbs/yd  AS      304+79   309+06    854 LF -0-
```

FIGURE 13 Track segment inventory report.

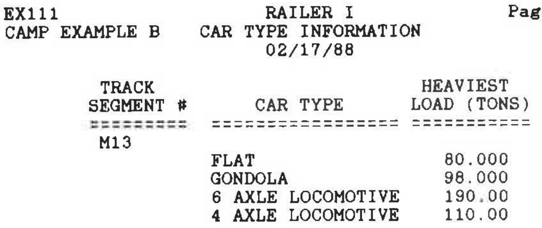

```
EX111              RAILER I             Page:     1
CAMP EXAMPLE B   CAR TYPE INFORMATION
                      02/17/88

        TRACK                        HEAVIEST
      SEGMENT #      CAR TYPE       LOAD (TONS)
      =========  =================  ===========
       M13
                 FLAT                   80.000
                 GONDOLA                98.000
                 6 AXLE LOCOMOTIVE      190.00
                 4 AXLE LOCOMOTIVE      110.00
```

FIGURE 14 Car type information report.

in what year and how much it cost helps in evaluating the performance and cost-effectiveness of past techniques and methods. At the project level, having specific information on past work accomplished can aid the engineer in choosing solutions to current problems. Figure 15 shows this report.

Repair Cost Information (Repair Cost Report)

This report (Figure 16) lists the cost to maintain or repair given track segments. The year in which the estimate was prepared and a brief description are also provided. This data file is updated after any network- or project-level tasks are performed that affect cost or the scope of the work that needs to be accomplished. This is the information that makes up the annual and long-range work plans.

A network-level management task that is accomplished with the aid of this report is budgeting. There is no specific budget-planning feature in RAILER I; however, summing all of the track segment costs from annual and long-range work plans creates a budget.

In addition, by summing the costs for all of the track segments the total dollar backlog can be quickly computed.

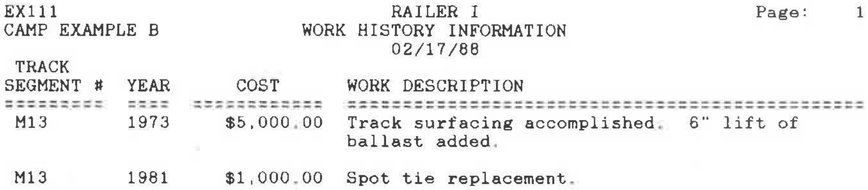

```
EX111                              RAILER I                        Page:     1
CAMP EXAMPLE B               WORK HISTORY INFORMATION
                                   02/17/88
 TRACK
SEGMENT #  YEAR      COST       WORK DESCRIPTION
=========  ====  ============   ==============================================
 M13       1973    $5,000.00    Track surfacing accomplished.  6" lift of
                                ballast added.

 M13       1981    $1,000.00    Spot tie replacement.
```

FIGURE 15 Work history information report.

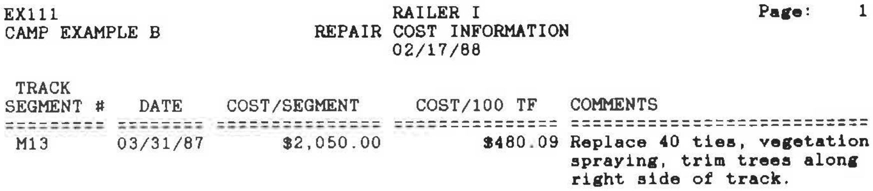

```
EX111                              RAILER I                        Page:     1
CAMP EXAMPLE B               REPAIR COST INFORMATION
                                   02/17/88

 TRACK
SEGMENT #   DATE     COST/SEGMENT     COST/100 TF    COMMENTS
========= ======== ============== ============== ==========================
 M13      03/31/87      $2,050.00         $480.09 Replace 40 ties, vegetation
                                                  spraying, trim trees along
                                                  right side of track.
```

FIGURE 16 Repair cost information report.

```
****************************************************************************
YOU HAVE SELECTED Rail WHERE Weight IS LESS THAN OR EQUAL TO 70 AND Tie
Inspection WHERE 3 Consecutive Defective Ties IS GREATER THAN 0 OR WHERE 4
Consecutive Defective Ties IS GREATER THAN 0 OR WHERE >=5 Consecutive
Defective Ties IS GREATER THAN 0 OR WHERE All Joint Ties Defective IS GREATER
THAN 0
****************************************************************************

                                 RAILER I
                           COMMON TRACK SEGMENT #
                           ======================

                                   1001
                                   501
                                   901A
                                   901B
                                   902

****************************************************************************
                                    RAIL
                                    ----
 TRACK                           BEGIN     END
SEGMENT #   WEIGHT    SECTION LOCATION LOCATION  LENGTH  COMMENTS
========= ========== ======= ======== ======== ======== =====================
 1001      60 lbs/yd  6017    0+85     14+27     2684 LF -0-
 501       60 lbs/yd  6017    0+89     8+65      1552 LF -0-
 901A      60 lbs/yd  6017    1+60     12+83     2246 LF -0-
 901B      60 lbs/yd  6017    12+83    26+35     2704 LF -0-
 902       60 lbs/yd  6017    26+35    32+55     1240 LF -0-


****************************************************************************
                                TIE INSPECTION
                                --------------
 TRACK          CONSECUTVIE          JOINTS    AVE.            MISSING/    ¦ TOTAL
SEGMENT# -----DEFECTIVE TIES----     TIES    SPACING SKEWED BUNCHED/BADLY¦DEFECT
/DATE      2     3     4    >=5   DEFECTIVE   > 22"   TIES   SKEWED TIES ¦ TIES
========= ===== ===== ===== ===== ========= ======= ====== =============¦======
1001        23    17     3     0         0        0      0             0 ¦   179
03/30/87 -0-

501         12     3     0     0         0        0      0             1 ¦    76
03/30/87 -0-

901A        12     2     0     0         0        0      0             0 ¦    94
03/30/87 -0-

901B        17     2     0     0         0        0      1             0 ¦   117
03/30/87 -0-

902         12     3     0     0         1        0      1             0 ¦    67
03/30/87 -0-
```

FIGURE 17 Parameter report.

TRACK USE	CONDITION RATING			
	OUT OF SERVICE	5 MILE/HR LIMIT	10 MILE/HR LIMIT	NO RESTRICTION
LOADING	1	4	7	11
ACCESS	2	5	8	14
AUXILIARY	3	9	12	17
STORAGE	6	13	15	19
SERVICE	10	16	18	20

FIGURE 18 Track segment ranking matrix.

The difference between the funding needs and the amount allocated in the annual work plan represents the unfunded requirement, which is the backlog of maintenance and repair.

Information by Setting Parameters (Parameter Report)

The Parameter Report is an extremely flexible RAILER I feature that combines the results from any of the other reports in such fashion that only the desired information is provided. For example, it may be desired to search the data base to determine if a situation exists in which light rail (inventory) is in combination with bad tie clusters (inspection). This report will first provide the common track segment that meets the desired parameters. Further detail regarding the parameters is then provided. Figure 17 shows this report.

The network-level management task of priority ranking work was previously discussed in conjunction with the Comparison Report for "worst first" ranking. If, however, a different method of work ranking were preferred, the Parameter Report would be used. For example, if ranking based on condition and track use is desired, the matrix shown in Figure 18 can be used. The common track segment portion of the Parameter Report would provide the input to the matrix. All track segments needing work would be assigned somewhere on the matrix. They would be ranked in increasing numerical sequence.

Installation Information (Installation Report)

As is shown in Figure 19, this report provides information not specific to any track segment. Used at the network level, this

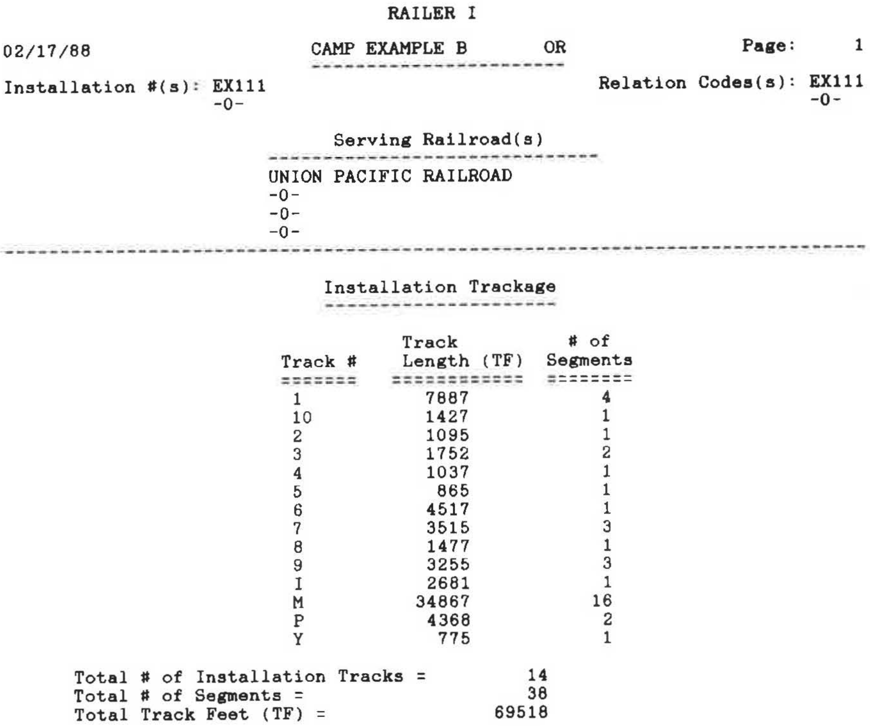

```
                              RAILER I

02/17/88                  CAMP EXAMPLE B      OR                 Page:     1
                          -----------------------
Installation #(s): EX111                          Relation Codes(s): EX111
                    -0-                                              -0-

                         Serving Railroad(s)
                        ------------------------------
                        UNION PACIFIC RAILROAD
                        -0-
                        -0-
                        -0-
------------------------------------------------------------------------------

                        Installation Trackage
                        ---------------------

                               Track           # of
                        Track #     Length (TF)  Segments
                        =======  ============  ========
                         1           7887          4
                         10          1427          1
                         2           1095          1
                         3           1752          2
                         4           1037          1
                         5            865          1
                         6           4517          1
                         7           3515          3
                         8           1477          1
                         9           3255          3
                         I           2681          1
                         M          34867         16
                         P           4368          2
                         Y            775          1

      Total # of Installation Tracks =          14
      Total # of Segments =                     38
      Total Track Feet (TF) =                69518
```

FIGURE 19 Installation information report.

report provides track numbers, total track lengths, numbers of segments for each track, and certain other information needed for mobilization planning.

Missing Information Report

This report lists the missing data fields by track segment. It provides a simple way of doing that task instead of searching through reports or data files in an attempt to determine if some information is missing.

FIELD TESTING

To date, the RAILER I system has been tested at several Army installations. The tests were performed by people with and without previous railroad maintenance experience. The intent was to ensure that (a) the objectives of the system, when used as a decision support system, were met; (b) all procedures were clear and usable by those with limited track maintenance experience; (c) the inspections resulted in the proper identification of conditions that were unsatisfactory and proper recognition of conditions that were satisfactory; (d) the information collected could be easily fed into the computer program; (e) computer reports were easily generated and presented information in a meaningful and convenient format; and (f) the system, as a whole, worked well.

CONCLUSIONS

The field test has shown that the RAILER I field procedures and computer programming perform as intended. This initial system will also provide a good basis for an enhanced RAILER II system with more features and greater capabilities.

The RAILER II system will include a complete inspection process, a basic track structural evaluation, and enhancements to existing features and report generation.

ACKNOWLEDGMENTS

The authors would like to acknowledge those who made significant contributions to the development of the RAILER I system. Their support and effort were important factors in the creation of a successful system.

U.S. Army Forces Command sponsored system development, initially through the effort of Bill Taylor and later by that of Jeff Blackwood and Carole Jones. Much support also came from Bob Williams (Office of the Chief of Engineers), Russ Golderman (Army Materiel Command), and the entire Army Pavements and Railroads Maintenance Committee.

Special appreciation goes to the group at USA-CERL who worked on RAILER I development. Their personal commitment to the project greatly helped in the successful development and field testing of the system. Special thanks go to Debra Piland who thoughtfully, creatively, and patiently led the computer programming effort; and also to Dave Brown for his ideas and support of other project members.

REFERENCES

1. D. R. Uzarski, D. E. Plotkin, and D. G. Brown. *The RAILER System for Maintenance Management of U.S. Army Railroad Networks*, Vol. 1: *RAILER I, Development and Use.* Draft Technical Report. U.S. Army Construction Engineering Research Laboratory, Champaign, Ill., 1988.

2. *Interim U.S. Army Railroad Track Maintenance Standards.* Headquarters, Department of the Army, Assistant Chief of Engineers, Oct. 1986.
3. D. R. Uzarski and D. E. Plotkin. *Maintenance Management of U.S. Army Railroad Networks—The RAILER System: Component Identification and Inventory Procedures.* Draft Technical Report. U.S. Army Construction Engineering Research Laboratory, Champaign, Ill., 1987.
4. D. R. Uzarski, D. E. Plotkin, and S. K. Wagers. Component Identification and Inventory of U.S. Army Railroad Trackage. In *Transportation Research Record 1131*, TRB, National Research Council, Washington, D.C., 1987, pp. 89–99.
5. D. A. Piland and D. R. Uzarski. *The RAILER System for Maintenance Management of U.S. Army Railroad Networks,* Vol. II: *Railer I Computer User's Guide.* Draft ADP Manual. U.S. Army Construction Engineering Research Laboratory, Champaign, Ill., 1988.

The views expressed are those of the authors and do not purport to reflect the position of the Department of the Army or the U.S. Department of Defense.

Publication of this paper sponsored by Committee on Railway Maintenance.

Priority Ranking U.S. Army Railroad Track Segments for Major Maintenance and Repair

DONALD R. UZARSKI, CHARLES S. MELCHING, AND JUDITH S. LIEBMAN

The U.S. Army Construction Engineering Research Laboratory and the University of Illinois have developed a microcomputer-based procedure called FORPROP for priority ranking railroad track segments that need major maintenance and repair (M&R). Intended for use by central (Major Command) planners who need to allocate funds to several subordinate installations, this procedure serves as a decision support tool for ranking track segments in a nearly optimal fashion. The model for accomplishing this uses a benefit-cost ratio heuristic. Benefit is defined as an increase in the value of each track segment, should the work be accomplished. Value is measured analytically by a "value factor" derived from utility concepts based on the preferences of Army transportation planners. It represents the relative value of a segment in the overall accomplishment of the railroad mobilization outloading mission. Cost is the total cost of the repair work on a segment. Ratios are computed for individual track segments as well as logical segment groups based on train movements. The groups are ranked by decreasing ratios. Through the use of elaborate bookkeeping and a binary (0-1) knapsack procedure, a group is selected as a function of ratio, precedence (certain segment groups repaired either before or in conjunction with the group being considered), and available budget.

A major task in managing a railroad track network is priority ranking the maintenance, repair, and rehabilitation work that needs to be accomplished in current and future years. Priority ranking work or projects is a complex task. If it is performed correctly, several questions should arise:

1. How much money is available?
2. What are the important parameters needed for decision making?
3. Where is the information about those parameters?
4. What are the consequences of the decision?
5. What are the trade-offs in terms of value gained for dollars expended?

In many instances the answers to these questions come from engineering, management, and "hands-on" experience. If experience is lacking or time constraints limit the level of effort that can be devoted to ranking, decisions are made without knowledge of their full impact. The consequences may be premature facility deterioration, accelerated costs, misallocation of resources, mission impairment, or all of these.

Currently, no structured decision methodology is available to U.S. Army planners for ranking centrally funded and managed major maintenance and repair (M&R) work. In the past, decisions were frequently made on an ad hoc subjective basis. Consequently, it is possible that the most worthwhile projects were not accomplished in a timely manner. This, in turn, could have a severe negative impact on the ability to mobilize via rail in the event of a national emergency. Also, because project costs are a function of condition (which worsens over time), lack of timeliness can have a negative impact on project costs.

The lack of a structured decision methodology is being addressed in two ways. First, maintenance management problems, in general, are being reduced by using a railroad maintenance management system called RAILER that was developed by the U.S. Army Construction Engineering Research Laboratory (USA-CERL). RAILER has two parts: (a) RAILER I (*1*), an interim system needed to support a current track rehabilitation program, and (b) RAILER II, a complete and fully capable system. The RAILER I system is complete and the RAILER II system will be ready for widespread implementation within 2 years. When RAILER has been implemented, Directorate of Engineering and Housing (DEH) personnel will be better able to understand and control the condition of their railroad track. The specific priority ranking problem has been solved through the development of a microcomputer-based rail project ranking program called FORPROP (for Forces Command Rail Prioritization Program). FORPROP represents an extension of the decision support management capabilities of the RAILER system.

CONCEPT

FORPROP is a microcomputer-based, stand-alone program. It can be used in either a decision-making or a decision support mode. The program provides a nearly optimal solution for allocating major M&R funds to installation track networks as well as to related facilities (docks, ramps, marshalling yards, and lighting). Flexible override features have been added to permit "what if" scenario building. FORPROP is used by Major Command (specifically U.S. Army Forces Command) planners to allocate major M&R funds for work at subordinate installations.

D. R. Uzarski, U.S. Army Construction Engineering Research Laboratory, P.O. Box 4005, Champaign, Ill. 61820. C. S. Melching, Department of Civil Engineering, and J. S. Liebman, Department of Mechanical and Industrial Engineering, University of Illinois, Urbana, Ill. 61801.

The program uses information transmitted to the Major Command from subordinate installation RAILER data bases. FORPROP does not develop or revise individual track segment work needs or cost estimates.

RAILER USE

The use of the priority ranking program requires certain data available from the RAILER I (or eventually RAILER II) Railroad Maintenance Management System data bases that have been established for each installation. Three types of data are transferred for use in the program: (a) installation identification, (b) track segment information, and (c) related facility information.

The network identification data include installation name, installation number, and state. These data are needed to differentiate one installation from another in the program.

Because FORPROP ranks groups of track segments, specific information on a track segment by track segment basis is needed from the RAILER data bases. These data include each track segment number, condition, most important car type that uses the segment, heaviest load carried, track rank, preceding track segment number, and total cost of M&R to restore the track segment to a "No Defect" condition according to the U.S. Army Track Maintenance Standards (*2*). A brief explanation of why these data elements are needed is given later in this paper and elsewhere (*3*). A description of each and an explanation of how they are obtained can also be found elsewhere (*1, 4, 5*).

Because the program will also priority rank work at related facilities associated with track segments, specific items of information concerning them are also needed, where appropriate. These include track segment number serving the facility, condition, and total cost of M&R to restore the facility to a fully operational condition. This cost is treated as part of the segment cost discussed previously.

The data are transferred from a special computer feature associated with the RAILER system. The information is transferred onto a 5¼-in. floppy diskette and mailed to the Major Command for entry into FORPROP.

MODEL

Background

This budgeting problem requires the solution of a large integer programming problem with potentially more than 500 binary variables, a single budget constraint, and possibly more than 500 precedence constraints (depending on the number of installations considered in the analysis). The precedence constraints arise because a railroad network consists of a tree in which the usability of certain track segments is dependent on the condition of other track segments in the same tree, namely the track segment that is immediately connected to a given track segment as a train travels into the installation.

Budget Allocation Problem

Mathematically the problem is formulated as

$$\text{Max} \sum_i \sum_j B_{ij} X_{ij} \qquad (1)$$

$$\text{s.t.} \sum_i \sum_j C_{ij} X_{ij} \le Budget \qquad (2)$$

Number of precedence constraints (3)

where

B_{ij} = amount of benefit gained by repairing Track Segment *i* at Installation *j* (discussed later);
C_{ij} = cost of repairing Track Segment *i* at Installation *j*;
X_{ij} = 1 if Track Segment *i* at Installation *j* is repaired, 0 otherwise; and
$Budget$ = budget available for repair of track.

Equations 1 and 2 describe what is known in operations research as the binary knapsack problem. This is a problem for which several highly efficient solution algorithms exist. Because of the nature of the typical U.S. Army installation railroad network, it is necessary to add precedence constraints to the formulation of the budget allocation problem. For example, in Figure 1, Track Segment 103, an access track segment, must be repaired in order to obtain the benefits from Segments 104 and 201, which are loading tracks, even though Segment 103 does not, by Army definition, directly contribute to the mobilization mission itself. Thus the condition of Track Segment 103 poses a constraint on the use of Track Segments 104 and 201. Such precedence constraints may be modeled as

$$X_{103} - X_{201} \ge 0, \quad X_{103} - X_{104} \ge 0$$

or, equivalently,

$$X_{201} + X_{104} - 2X_{103} \le 0 \qquad (4)$$

Solution Methodology

With several installations under consideration and anywhere from 5 to more than 100 track segments per installation, an extremely large integer programming problem can result. Thus, for this problem, traditional integer programming cannot be used, and it is questionable whether modified schemes involving implicit enumeration and dynamic programming can solve it. For solving binary knapsack problems, an approach is needed that handles precedence constraints. The approach taken was to create and rank groups of track segments. By using cost information transferred from RAILER and benefit information computed within FORPROP (discussed later in this paper), the track segment groups are first developed by combining connected track segments such that the best benefit-cost ratio for a group is obtained. These groups are then ordered by decreasing values of the benefit-cost ratio.

The next step places the created track segment groups on either an eligible or an ineligible list for selection based on precedence and budget level. If a preceding track segment (as part of a group) has not been selected, all following track segment groups are ineligible for selection. If a preceding track segment has been selected, the following track segment group is eligible for selection.

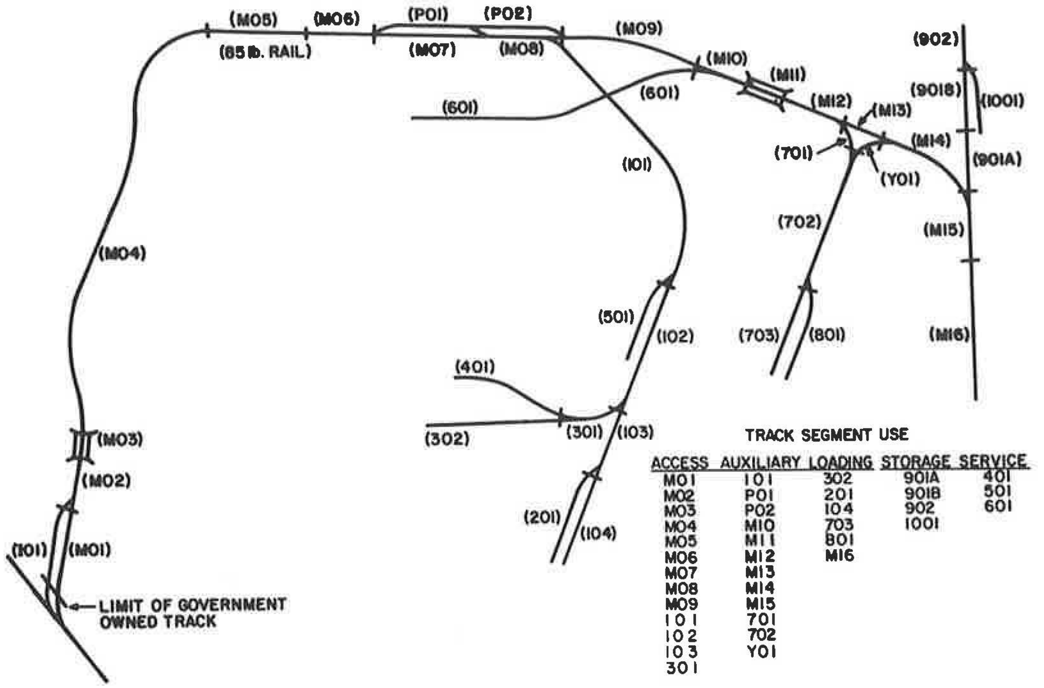

FIGURE 1 Camp Example track network.

By using the sorted list concept developed by Nauss (*6*) as a starting point, an elaborate bookkeeping procedure was developed for listing selected, eligible for selection, and ineligible track segment groups. Bookkeeping comes into play when one of the eligible segment groups is selected to enter the solution. When this happens, the track segment groups for which this selected group is a direct predecessor are added to the eligible list. Any additional groups are then selected from this updated list. The process continues until the budget is consumed.

Two simple processes are employed to further allocate funds when the cost to repair the next track segment group on the ranked eligible list exceeds the remaining available funds. The first simply ignores this next group, moves down the eligible ranked list, and tries to consume the remaining available funds with a different group. The second accepts the next segment group, ignored earlier, on the list. Because this creates a budget overrun, previously selected segment groups beginning with the lowest benefit-cost ratios are withdrawn until budget feasibility is obtained. The first process is then reemployed.

A complete description of the development of this budget allocation solution methodology has been published (*7*).

Example of Bookkeeping Routine for Camp Example

For illustrative purposes, Table 1 gives cost and benefit information for a portion of a fictional installation called Camp Example (Figure 1).

Step 1

The benefit-cost ratios (*R*) for Track Segments 201 and 104 are placed on the candidate project list. The model always first considers track segments that are not, in themselves, predecessors. During the first step, those individual track segments constitute individual groups.

TABLE 1 EXAMPLE COSTS AND BENEFIT LEVELS FOR TRACK NETWORK SHOWN IN FIGURE 1

Track Segment	$k Cost (C)	Benefit (B)
102	8.190	0
103	7.122	0
104	10.548	93
201	9.940	71
301	25.168	0
302	9.972	48

$R_{201} = B_{201}/C_{201} = 71/9.940 = 7.143$

$R_{104} = B_{104}/C_{104} = 93/10.548 = 8.817$

Step 2

The segment that offers the largest return on investment and uses common Track Segment 103 must be found. To do this, the precedence constraints must be worked through.

For the deepest common track segment, 103, the "best" segment group is found by combining Segment 103 with the "best" segment that it precedes, in this instance, Segment 104. Mathematically,

$R_{103} = B_{103}/C_{103} = 0$

$$\begin{aligned}R_{103,104} &= (B_{103} + B_{104})/(C_{103} + C_{104})\\ &= (0 + 93)/(7.122 + 10.548)\\ &= 5.263\end{aligned}$$

$$\begin{aligned}R_{103,201} &= (B_{103} + B_{201})/(C_{103} + C_{201})\\ &= (0 + 71)/(7.122 + 9.940)\\ &= 4.161\end{aligned}$$

$R_{103,104}$ is best and, thus, a group has been created. Now Segment 201 should be considered for group improvement.

$R_{20} = 7.143$ (from preceding).

Because R_{201} is greater than $R_{103,104}$, adding it to the group will result in improvement. Thus Segment 201 is also added. Had the ratio been less, Segment 201 would not have been added and two groups would have resulted. (For continuation of the example, assume for brevity that Segments 301 and 302 make up a group, and that Segment 401 makes up a group.)

Step 3

The segment group that offers the largest return on investment and uses common Track Segment 102 must be found.

$R_{102} = B_{102}/C_{102} = 0$

$$\begin{aligned}R_{102,103,104,201} &= (B_{102} + B_{103} + B_{104} + B_{201})/\\ &\quad (C_{102} + C_{103} + C_{104} + C_{201})\\ &= (0 + 0 + 93 + 71)/(8.190 + 7.122 + 10.548\\ &\quad + 9.940)\\ &= 4.581\end{aligned}$$

$$\begin{aligned}R_{102,301,302} &= (B_{102} + B_{301} + B_{302})/(C_{102} + C_{301} + C_{302})\\ &= (0 + 0 + 48)/(8.190 + 25.168 + 9.372)\\ &= 1.123\end{aligned}$$

The group of Segments 102, 103, 104, and 201 is best. Now the group of Segments 301 and 302 needs to be reconsidered for possible improvement with the group of Segments 102, 103, 104, and 201.

$$\begin{aligned}R_{301,302} &= (B_{301} + B_{302})/(C_{301} + C_{302})\\ &= (0 + 48)/(25.168 + 9.372)\\ &= 1.389\end{aligned}$$

Because $R_{301,302}$ is less than $R_{102,103,104,201}$, adding Track Segments 301 and 302 to the group of Segments 102, 103, 104, and 201 offers no improvement to the return on investment ratio. Thus Group 102, 103, 104, 201 will move forward for consideration at the next lower level of the tree network. Segment Group 301, 102 must wait to be considered until the 102, 103, 104, 201 group is selected. In general, the bookkeeping algorithm checks at each level of group building to see if "waiting" track segments result in an improvement.

Step 4

Continue as in Step 3 for the rest of the network.

BENEFIT

Concept

The benefit used in the benefit-cost ratio heuristic is defined as the increase in "value" of the track segment with respect to its role in meeting the U.S. Army's mobilization mission after the work is completed.

Assessing Value

The approach selected for application in this project uses utility concepts. "Utility," as applied here, is a subjective preference rating that users, transportation planners, engineers, and managers can apply to the track segments to assess value at any given time. This rating represents the potential mobilization utility of a given track segment.

The value rating is scalar ranging from 0 to 100, the higher number indicating higher preference or value.

Because each track segment at each installation contributes to the mobilization mission in a somewhat different fashion, the relative value ratings for each segment may not be the same regardless of condition.

Empirical Approach

Difficulties arise in the practical application of preference ratings. One is that they must be applied to each of the several hundred track segments. That task is huge even if done only once, but the problem is compounded because value rating is dependent on condition, which varies over time. A second difficulty is related to the problem of who does the ratings. Practically speaking, no person can routinely travel from installation to installation for the purpose of rating track segments.

The solution is to develop an empirical method of calculating a value factor (*VF*) that would reasonably match the subjective value ratings and use routinely collected RAILER data.

Value Factor

Equation

Through interaction with Forces Command personnel certain factors were identified that strongly influenced the decision process: (a) installation importance and geographic factor, (b) individual installation network layout and traffic movements factor, and (c) operational capability factor for each track segment.

The first two, when combined, represent a time-independent constant for individual track segments. The third is time dependent and will decrease as the track segment or related facility condition deteriorates and will increase with work accomplishment.

The factors were combined into the following empirical equation in order to obtain *VF*:

$$VF_{ij} = 246.63 * [I * D]_j^{0.8} * R_{t\,ij}^{0.5} * [\ln(1.0 + 0.5 * C_t^1 * C_r)]_{ij}^c \qquad (5)$$

where VF_{ij} is the value factor of the ith track segment at the jth installation. VF, like the value rating it represents, gives the relative value of a track segment at a given time for accomplishing the overall mobilization mission via rail. A discussion of each factor follows.

VF Factors

The variables and constants associated with the *VF* factors were identified and agreed to during interaction with Forces Command. The possible values of the variables and the specific constant values were derived through sensitivity analysis (*2*).

Installation Importance and Geographic Factor This factor addresses the total installation and is represented by $[I * D]_j^{0.8}$ in the *VF* equation. It serves to place more value on important installations and those farther from alternate mobilization loading sites. The exponent limits the influence of the entire factor the desired amount.

Herein, I is installation weight, a subjective factor ranging from 0 to 1.0 that describes the relative importance (1.0 = most important) of each installation. This reflects the installation mission and may change over time. D is distance factor to nearest available yard. This factor takes into account the availability of alternate railroad loading sites. The effect is to give priority to installations with little or no practical alternative (due to distance) for loading or unloading and moving railcars in the event of mobilization. If the distance is greater than 25 mi, the factor is 1.0; it is 0.9 otherwise.

Individual Installation Network Layout and Traffic Movements Factor This factor consists of a track rank (R) and an exponent limiting its influence. Track rank addresses the relative value of given track segments within the installation. Track ranks are obtained analytically (*1*) and range from 0 to 1.0 (1.0 = most important). Higher value is placed on track segments with more traffic, those that allow easy and minimal (less switching and time) train movements, specific functional use, longer functional length, less curvature, and the presence of ramps and lighting (where appropriate). By Army definition, access track segments have a track rank of zero. The effect of a zero track rank is that access tracks cannot be in a group without the functional track segment or segments that they serve.

Operational Capability Factor This factor addresses primarily the condition of each track segment and related facility, as appropriate, and is denoted by $[\ln(\ldots)]_{ij}^c$.

C_t is track segment condition rating. This rating ranges from 0 to 1.0. Table 2, tied to the U.S. Army track standards (*2*), has been developed as part of RAILER I (*2*). The range within a specific category is due to the effects of multiple defects. A given track segment will have a specific value assigned that is determined analytically within RAILER I. After repair this value is assumed to be 1.0.

TABLE 2 TRACK CONDITION RATING VALUES

Value	Meaning
1.0	Track meets or exceeds interim standards
<1.0 to >0.7	Track has defects, but none that leads to operating restrictions
0.7 to >0.5	Track has defects resulting in 10-mph speed limit
0.5 to >0.3	Track has defects resulting in 5-mph speed limit
0.3 to 0.0	Track segment is out of service because of deterioration

l is load factor. This analytical factor ranges from 1.0 to 2.25. It serves to account for the negative effects of heavy loadings (*8, 9*). Table 3 gives the equations used in the computation.

C_r is related facilities condition rating. This is an analytical rating from 0 to 1.0 addressing the condition of the related facilities needed to support railroad operations. Table 4 gives the ratings. After repair this value is assumed to be 1.0.

TABLE 3 LOAD FACTOR EQUATIONS

Equation	Application
1 = 1.0	For weights less than 50 tons
1 = W/50	For weights between 50 and 100 tons
1 = (W/160) + 1.375	For weights between 100 and 140 tons

c is car type factor, a subjective factor ranging from 1.0 to 3.0 that describes the relative importance of the kinds of cars that must be moved in a mobilization. This serves as an indirect factor for considering the kind of materials and equipment moved on the cars because some items (e.g., tanks) are less readily moved by an alternate means of transport than others. This factor provides preference to track segments carrying those loads. Table 5 gives the factors established for the kinds of cars moved in a mobilization.

TABLE 4 RELATED FACILITIES CONDITION RATINGS

Rating	Interpretation
1.0	Fully operational
0.7	Operational, but deficiencies exist
0.0	Not operational or nonexistent

TABLE 5 CAR TYPE FACTORS

Factor	Application
1.0	Heavy flatcars
1.4	Flatcars
1.6	Gondolas
2.0	Boxcars
3.0	Hopper cars

Computing Benefit

Benefit is expressed mathematically as

$$B_{ij} = VF_{ija} - VF_{ijb} \qquad (6)$$

where B_{ij} is the benefit associated with performing maintenance or repair to the ith track segment at the jth installation, VF_{ijb} is the value factor before the work was performed, and VF_{ija} is the value factor afterwards. Both are obtained from Equation 5 using the different condition ratings described previously.

PROGRAM USE

When the program is accessed, the user first selects the installations that should be included in the analysis. FORPROP then establishes and ranks the segment groups. Next, the user enters a budget level and FORPROP selects the groups. The menu shown in Figure 2 is accessed and the user has various options for displaying the results. Figure 3 shows the results from the first option. If the user elects to make changes to the analysis, the menu shown in Figure 4 is available.

It is intended that the user first set a total budget covering the entire multiyear planning period and apply it to all installations needing work. A report, similar to the one shown in Figure 3, is obtained. The user can then mark the ranking limits on the report on the basis of the yearly budget projection. The spread of work at the same installations over time must be studied to determine if the selection should be modified. This is done for a practical reason: the desire to not carry over small work packages consisting of a group or two at a given installation into the next year or possibly the year after.

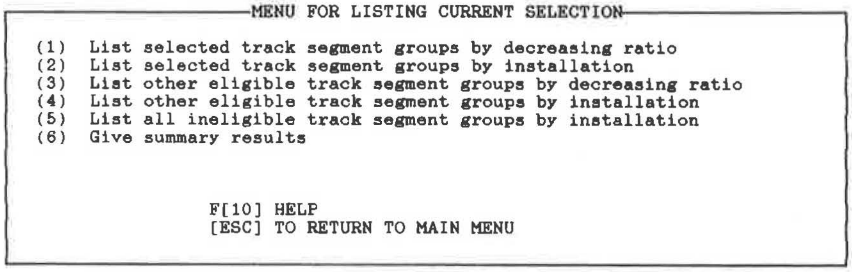

```
                    MENU FOR LISTING CURRENT SELECTION

  (1)  List selected track segment groups by decreasing ratio
  (2)  List selected track segment groups by installation
  (3)  List other eligible track segment groups by decreasing ratio
  (4)  List other eligible track segment groups by installation
  (5)  List all ineligible track segment groups by installation
  (6)  Give summary results


                  F[10] HELP
                  [ESC] TO RETURN TO MAIN MENU
```

FIGURE 2 Menu for listing current selection.

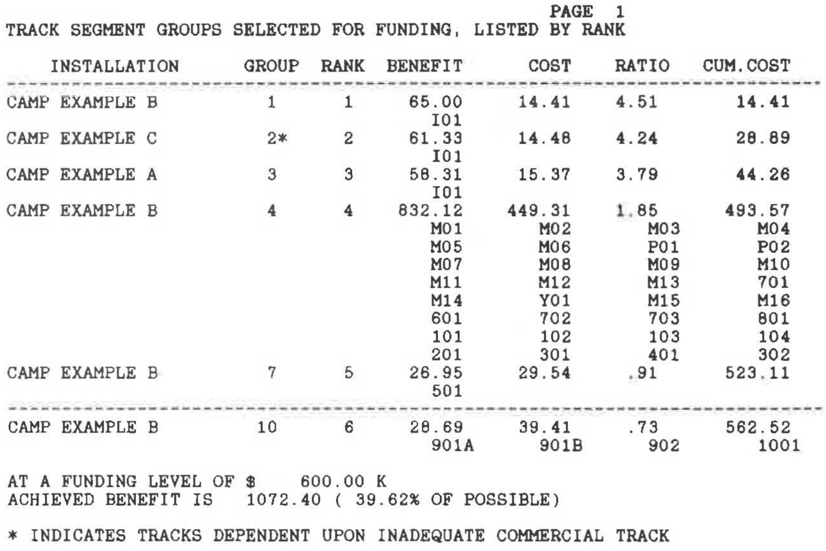

```
                                                  PAGE  1
TRACK SEGMENT GROUPS SELECTED FOR FUNDING, LISTED BY RANK

    INSTALLATION       GROUP  RANK  BENEFIT        COST     RATIO    CUM.COST
------------------------------------------------------------------------------
CAMP EXAMPLE B           1      1     65.00       14.41     4.51        14.41
                                       I01
CAMP EXAMPLE C           2*     2     61.33       14.48     4.24        28.89
                                       I01
CAMP EXAMPLE A           3      3     58.31       15.37     3.79        44.26
                                       I01
CAMP EXAMPLE B           4      4    832.12      449.31     1.85       493.57
                                       M01         M02       M03          M04
                                       M05         M06       P01          P02
                                       M07         M08       M09          M10
                                       M11         M12       M13          701
                                       M14         Y01       M15          M16
                                       601         702       703          801
                                       101         102       103          104
                                       201         301       401          302
CAMP EXAMPLE B           7      5     26.95       29.54      .91       523.11
                                       501
------------------------------------------------------------------------------
CAMP EXAMPLE B          10      6     28.69       39.41      .73       562.52
                                       901A        901B      902         1001

AT A FUNDING LEVEL OF $     600.00 K
ACHIEVED BENEFIT IS   1072.40 ( 39.62% OF POSSIBLE)

* INDICATES TRACKS DEPENDENT UPON INADEQUATE COMMERCIAL TRACK
```

FIGURE 3 Track segment groups selected for funding.

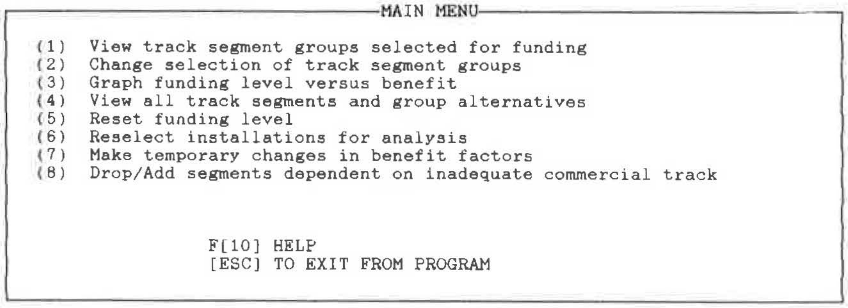

```
                              MAIN MENU

  (1)  View track segment groups selected for funding
  (2)  Change selection of track segment groups
  (3)  Graph funding level versus benefit
  (4)  View all track segments and group alternatives
  (5)  Reset funding level
  (6)  Reselect installations for analysis
  (7)  Make temporary changes in benefit factors
  (8)  Drop/Add segments dependent on inadequate commercial track


                  F[10] HELP
                  [ESC] TO EXIT FROM PROGRAM
```

FIGURE 4 Main menu.

Any group that needs to be shifted from one year to another should be noted. The program is then rerun for a first-year budget only and the selected segment groups analyzed. The desired groups that were not automatically selected during the total multiyear budget run accomplished earlier for a first-year budget limit are now added to the selected list through a menu feature (Figure 5).

Because the budget is now overrun, other segment groups are deleted through the same menu feature. When that has been accomplished and all of the desired groups have been selected for the first year, all (or entire installations, if appropriate) are then deleted from the analysis. The process of budget limit and segment group addition and deletion is repeated for the next and subsequent years' analyses. Of course, this entire multiyear planning process should be repeated annually when budget figures are established for the current and following years.

"What if" scenarios can be developed by changing budget levels, installation weight factors, and the like, and the effects on the priority ranked plan can be readily seen. Uzarski et al. (*3*) describe several methods, with examples, for using FORPROP results in a decision support mode for developing a priority ranked plan. When the user performs "what if" scenario studies, temporary internal changes are made but never saved. The original data remain intact. Should the user decide that certain permanent changes should be made, such as a change in mission necessitating a change in the installation weight factor, a procedure is available to accomplish that task. Installation data, discussed earlier, provided annually from the RAILER data bases result in permanent changes to the FORPROP data base.

FORPROP is written in FORTRAN and operates on an IBM XT, AT, or 100 percent compatible microcomputer with a 10-megabyte hard disk, 640K RAM, and a dot matrix 80-column printer (with IBM standard character set). A complete description of FORPROP operation and use is available (*3, 10*).

TESTS

Three phases of testing of the FORPROP program were performed: laboratory, field (simulation and actual), and systems acceptance. Modifications resulted from each phase.

Laboratory testing consisted of specific data elements being entered and run to ensure that specific portions of the model and program were operating correctly. This was done to locate program errors, test algorithms and heuristics, create or modify screen and file formats, and calculate the speed of operations.

The purpose of the field phase of the testing was to ensure that the program worked correctly for multiple installations and that the results were reasonable.

RAILER I data bases were first created for three fictitious installations called Camp Example A, Camp Example B, and Camp Example C. Installation weight factors and distances to the nearest yard varied along with the condition of each track segment and related facilities. Condition defects were randomly generated through an external generation program developed for this application. As a result, similar segments at different installations had different conditions. Repair costs were then calculated using unit costing techniques. When all data had been generated or calculated, the data were transferred to FORPROP. Actual installation data were incorporated later.

Systems acceptance testing was accomplished by USA-CERL and U.S. Army Forces Command personnel to ensure that the program operated on the desired hardware, the features worked, reasonable results were obtained, and the documentation was adequate to support use. Training and a user's guide (*10*) were provided by USA-CERL.

CONCLUSIONS

Under laboratory and field test conditions, the program worked efficiently and provided enough flexibility for "what if" scenarios to be studied. The program proved to be easy to use with minimal introductory training, and the model provided optimal solutions to the budget allocation problem. However, two issues are worthy of further research and follow-on work. First, it would be better if benefit were defined in terms of the increase in track performance expected for the expenditure of funds. Unfortunately, the performance of Army track cannot be predicted at this time. Second, if additional programming were performed to permit the modification of projects or the addition of multiple alternatives for M&R to the model, more sophisticated analyses could be made.

ACKNOWLEDGMENTS

The efforts of Suzie Karls and Dick Olson of the University of Illinois Operations Research Laboratory are deeply appreciated. Don Plotkin, Mike Pearson, John Borse, David Brown, and especially Debra Piland from USA-CERL, who all contributed to the program, deserve a special acknowledgment. Also, appreciation is extended to David Dorfman and Allen Snyder of the Military Transportation Management Command (MTMC) for their efforts in track rank development.

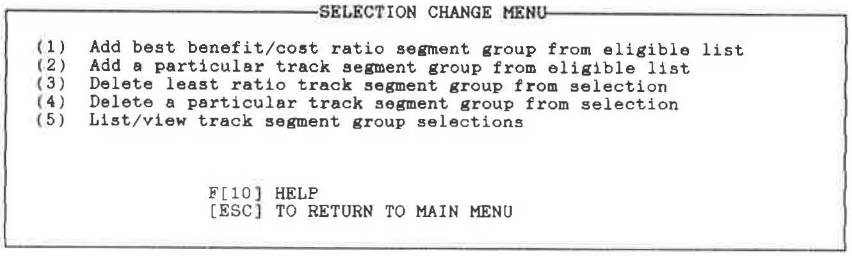

```
SELECTION CHANGE MENU

(1)  Add best benefit/cost ratio segment group from eligible list
(2)  Add a particular track segment group from eligible list
(3)  Delete least ratio track segment group from selection
(4)  Delete a particular track segment group from selection
(5)  List/view track segment group selections


                  F[10] HELP
                  [ESC] TO RETURN TO MAIN MENU
```

FIGURE 5 Selection change menu.

Special acknowledgments are given to Bill Taylor, formerly of the U.S. Army Forces Command, for his initiative in the sponsorship of the program and to Carole Jones, Jeffery Blackwood, and Col. Warren Kirchner also from Forces Command for their ongoing support.

Warmest appreciation is extended to Jim Roberts, formerly of Department of the Army, Logistics, for his outstanding support.

REFERENCES

1. D. R. Uzarski, D. E. Plotkin, and D. G. Brown. *The RAILER System for Maintenance Management of U.S. Army Railroad Networks*, Vol. 1: *RAILER I, Development and Use*. Draft Technical Report. U.S. Army Construction Engineering Research Laboratory, Champaign, Ill., 1988.
2. *Interim U.S. Army Railroad Track Maintenance Standards*. Headquarters, Department of the Army, Assistant Chief of Engineers, Oct. 1986.
3. D. R. Uzarski, J. S. Liebman, C. S. Melching, and D. E. Plotkin. *FORSCOM Railroad Project Prioritization Program (FORPROP) for the RAILER System*, Vol. 1: *Development and Testing*. Draft Technical Report. U.S. Army Construction Engineering Research Laboratory, Champaign, Ill., 1988.
4. D. R. Uzarski and D. E. Plotkin. *Maintenance Management of U.S. Army Railroad Networks—The RAILER System: Component Identification and Inventory Procedures*. Draft Technical Report. U.S. Army Construction Engineering Research Laboratory, Champaign, Ill., 1987.
5. D. R. Uzarski, D. E. Plotkin, and S. K. Wagers. Component Identification and Inventory of U.S. Army Railroad Trackage. In *Transportation Research Record 1131*, TRB, National Research Council, Washington, D.C., 1987, pp. 89–98.
6. R. M. Nauss. An Efficient Algorithm for the 0-1 Knapsack Problem. *Management Science*, Vol. 23, No. 1, 1978, pp. 27–31.
7. C. S. Melching and J. S. Liebman. Allocating Railroad Maintenance Funds by Solving Binary Knapsack Problems with Precedence Constraints. *Transportation Research*, forthcoming.
8. R. E. Ahlf. Heavy Four-Axle Cars and Their Maintenance of Way Costs. *AREA Bulletin 653*, 1975.
9. G. P. Raymond. Subgrade and Ballast Requirements for 125-Ton Cars. In *Transportation Research Record 1131*, TRB, National Research Council, Washington, D.C., 1987, pp. 64–73.
10. S. Karls, D. A. Piland, and D. R. Uzarski. *FORSCOM Railroad Project Prioritization Program (FORPROP) for the RAILER System*, Vol. 2: *Computer User's Guide*. Draft ADP Manual. U.S. Army Construction Engineering Research Laboratory, Champaign, Ill., 1988.

The views of the authors do not purport to reflect the position of the Department of the Army or the U.S. Department of Defense.

Publication of this paper sponsored by Committee on Railway Maintenance.

Response of Timber Bridges Under Train Loading

A. S. UPPAL AND S. H. RIZKALLA

Timber bridges are still commonly used by several North American railroads. For short spans, they offer attractive alternatives to other types of bridges because they are more economical, faster to construct, and easy to maintain. Current design practices do not allow independent consideration of the effects of dynamic loads in sizing bridge components. The main objective of this paper is to describe the experimental work conducted to study the behavior of timber bridge spans under the passage of trains at different speeds. Tests were conducted on two types of bridge spans, a ballast deck and an open deck. Test results indicate the response of spans and the effects of other parameters such as speed and static wheel loads to dynamic factors.

In the 1970s it was reported (*1*) that there were approximately 2,300 track miles of timber railroad bridges in service in the United States and Canada. Although their number has dropped since then as a result of replacement by other materials and branch line abandonments, they still represent a significant portion of the railroad bridge inventory. For short spans, they offer an attractive alternative to other types of bridges because they are more economical, faster to construct, and easy to maintain.

Current design practices (*2*) do not allow independent consideration of the effects of dynamic loads in sizing bridge components, because there is little information available on the subject. The only published literature found was reports by the Engineering Division of the Association of American Railroads (*3, 4*) that dealt with exploratory tests on timber approaches as a part of dynamic tests conducted on steel bridges.

To study the dynamic response of timber bridges under railway loading, field tests were carried out to measure the behavior of two types of timber bridges (including the adjacent approaches and the track sections) under the passage of trains at different speeds. This paper is a brief description of the test procedure, the test results, and the effects of different parameters such as train speed and static wheel loads on dynamic load and displacement factors.

SELECTION OF TEST SITES

Two test sites were selected, one with a ballast-deck bridge and another with an open-deck bridge. The two sites were close to each other, were accessible by road, and were of single-storey height for ease of instrumentation. The sites chosen were approximately 25 mi northwest of Winnipeg near Grosse Isle, Manitoba, at Mile 16.50 and Mile 19.50, respectively, of the Canadian National Railways (CN) branch line named Oak Point Subdivision. At each site, the bridge, the approach, and the track section were instrumented to measure the response.

Bridges

The first bridge was a slough crossing, located at Mile 16.50 Oak Point Subdivision, that was a four-span ballast-deck pile trestle with an overall length of 45 ft 10 in. and a height of 9 ft 4 in. It was built in 1943 using treated Douglas Fir material. The deck was made up of 10 in. × 4 in. by 13 ft 6 in. long transverse planks nailed onto ten 8- × 16-in. spaced stringers (including two jack stringers) with an average span length of 11 ft $2^1/_2$ in. A majority of the stringers were two spans long and alternatively continuous over intermediate bents. Each bent consists of a 12 in. × 14 in. by 14 ft 0 in. long cap resting on five piles, driven to penetrations varying from 18 to 24 ft. A typical elevation and cross section of the ballast-deck bridge are shown in Figure 1 (top).

The second bridge was a slough crossing, at Mile 19.50 Oak Point Subdivision, consisting of a three-span, open-deck pile trestle with an overall length of 36 ft $5^1/_2$ in. and a height of 5 ft 4 in. It was built in 1945–1946 using treated Douglas Fir material. Its deck was made up of twenty-eight 8 in. × 8 in. by 12 ft 0 in. bridge ties spaced at 12-ft centers, which were renewed in 1975. They were resting on eight 8 in. × 16 in. chorded stringers with an average span length of 11 ft $6^1/_4$ in. A majority of the stringers were two spans long and alternatively continuous over intermediate bents. Each bent consisted of a 12 in. × 14 in. by 14 ft 0 in. long cap supported over five piles, each driven to a penetration of approximately 23 ft. A typical elevation and cross section of the open-deck bridge are shown in Figure 1 (bottom).

Before testing, seemingly loose members were shimmed and all fasteners were tightened to ensure adequate performance of all components.

Bridge Approaches

A section of track behind the dumpwalls, which provides transition between the track and the bridge (say within 15 ft of the dumpwalls), is referred to as an "approach." The approach sections of both bridges were in reasonable condition and

---

A. S. Uppal, Canadian National Rail, Room 460, 123 Main Street, Winnipeg, Manitoba R3C 2P8, Canada. S. H. Rizkalla, Civil Engineering Department, University of Manitoba, 342 Civil Engineering Building, Winnipeg, Manitoba R3T 2N2, Canada.

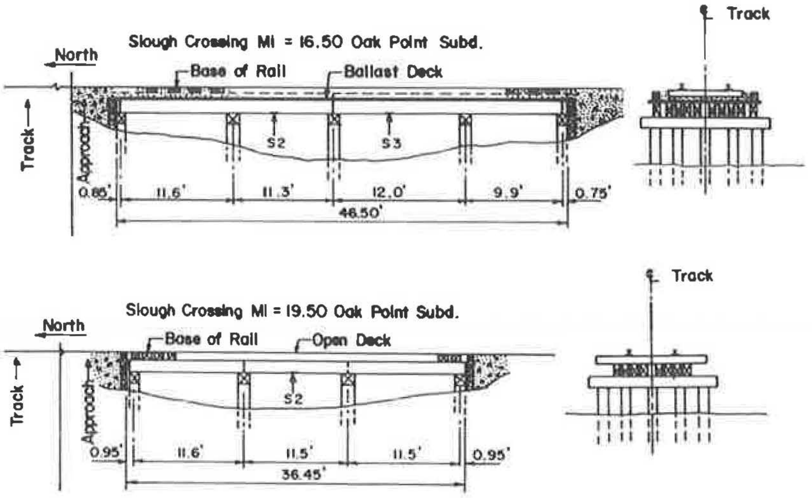

FIGURE 1 First test bridge—ballast deck (top); second test bridge—open deck (bottom).

possessed full sections of gravel and pit-run material. The approaches of the ballast-deck bridge had transition track ties.

Track Sections

A section of the track beyond the approaches (say about 50 ft from the dumpwalls and beyond) is referred to as a "normal track" section. The alignment of track at both test sites was tangent. The grade at the first bridge was level, and the grade at the second was +0.02 percent north. The track consisted of 85-lb (Sec. 137 Algoma Canada MRS 85-lb HF-1944) jointed rails in lengths of about 39 ft and $7\frac{1}{2}$ in. × 11 in. double shoulder tie plates spiked to 8 in. × 6 in. by 8 ft 0 in. long ties spaced at approximately 22-ft centers and embedded in a ballast section of gravel and pit-run material.

The zone speed over the stretch of track covered by these tests was 30 mph with a maximum weight limit of 220,000 lb for a four-axle car. Therefore, to accommodate speeds of up to 50 mph for the tests, the track was upgraded by spot surfacing and lining.

TEST TRAINS

The trains used for the tests were similar to the trains normally operated on this line for hauling limestone from Steep Rock, Manitoba. Because trains were required on two different occasions, they differed in car numbers and car weights. However, both of them were made up of a GR-20 series four-axle diesel locomotive, two ballast-loaded open-top hopper cars, and a caboose as shown in Figure 2. The hopper cars had transverse beams situated at their midlength just below their bodies, which facilitated jacking for static tests. The test trains were scale weighed by their trucks at the local tower scale in CN's Symington Yard before they left for the test sites. Table 1 gives the scale weights of locomotives and cars in the test trains.

INSTRUMENTATION

The bridges, their approaches, and the normal track sections were instrumented to measure the loads at wheel-rail interfaces and the vertical displacements under the rail points. Accelerations were also recorded at midpoints of the bridge spans. Figure 3 shows typical locations of the shear-load circuits used to measure the load at the wheel-rail interfaces, the linear velocity displacement transformers (LVDTs) for the vertical displacements, and the accelerometers for the first test site.

Loads at Wheel-Rail Interfaces

The method (*5, 6*) used for measuring the vertical loads at the wheel-rail interfaces was based on a circuit consisting of eight strain gauges attached to the rail at each of the measurement locations. Four gauges were installed on each side of the rail neutral axis as shown in Figure 4. This pattern, referred to as a shear-load circuit, measures the net shear differential between the two gauged regions, a-b and c-d, with a gauge pattern placed between the rail support points. The circuit output is directly proportional to the vertical load (P) as it passes between the gauges. This strain gauge arrangement was tested in the Structural Laboratory of the University of Manitoba before its installation in the field, and it was found to exhibit excellent linearity and minimal sensitivity to the lateral load (cross talk) or to the lateral component of the vertical load.

A total of six shear circuits were installed at each of the test sites: two circuits at the middle of the intermediate span of the bridge, two at the approach, and two at the normal track section at an approximate distance of 50 ft from the bridge.

Vertical Displacements

Vertical displacements were measured using LVDTs at the same points where the shear-load circuits were installed. The LVDTs were mounted under the chords of the spans and under the rails for the approaches and normal track sections. PVC pipes 4 in. in diameter were pushed into augered holes located 8 ft 6 in. from the centerline of the track and beneath the measurement points. A steel pipe 2 in. in diameter was inserted into each of the PVC pipes and driven into the ground. The annular spaces between the pipes were kept hollow except

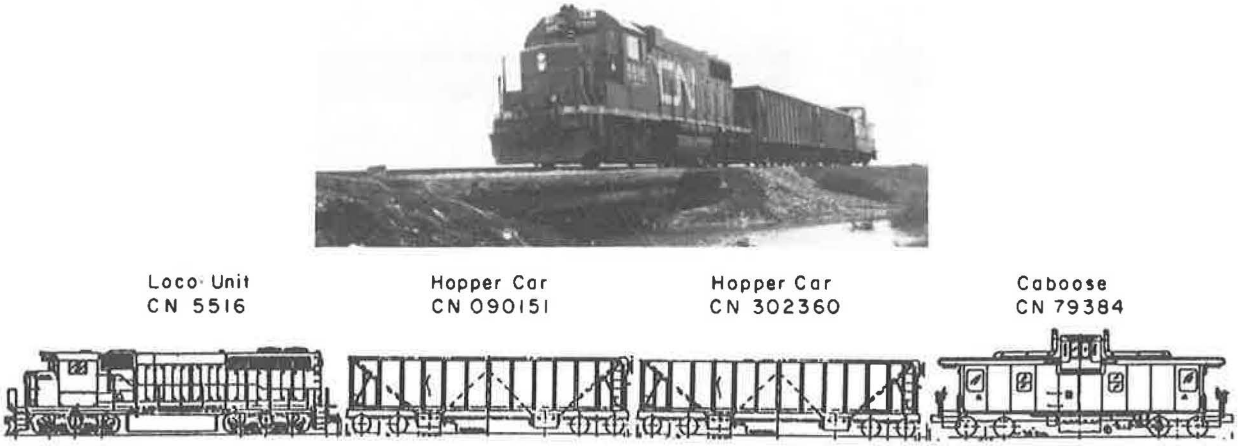

FIGURE 2 Typical test train.

TABLE 1 SCALE WEIGHTS OF LOCOMOTIVES AND CARS

Description			Truck Weights (lbs)		Total Weights (lbs)
			Leading	Trailing	
Test train #1 11 July 1986	1.	Locomotive CN #5516	124,220.	123,560.	247,700.
	2.	Hopper car CN #090151	101,740.	104,700.	206,440.
	3.	Hopper car CN #302360	96,090.	101,700.	197,760.
	4.	Caboose CN #79384	31,300.	31,520.	62,820.
Test train #2 16 Sept. 1986	1.	Locomotive CN #5608	126,900.	125,800.	252,760.
	2.	Hopper car CN #090159	88,480.	98,700.	187,180.
	3.	Hopper car CN #090151	100,840.	108,760.	204,600.
	4.	Caboose CN #79715	30,580.	30,240.	60,820.

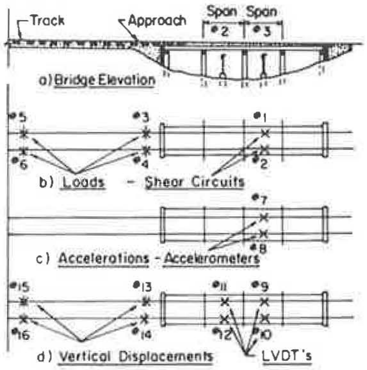

FIGURE 3 Location of instrumentation for first test bridge.

at the top where they were filled with polyfoam rings and covered with plastic wrappings. This type of support system was used to prevent any ground vibrations produced by train dynamics from affecting the LVDT readings. The detail of support systems is shown in Figure 5. Four such supports were installed at Site 1 and three at Site 2. A typical support system used for the second bridge is shown in Figure 6.

Accelerations

Accelerations were measured using two Bruel and Kjaer 4366 accelerometers mounted to the underside of the stringer chords with Thermogrip hot-melt glue. The two accelerometers were connected to a pair of Bruel and Kjaer 2626 conditioning

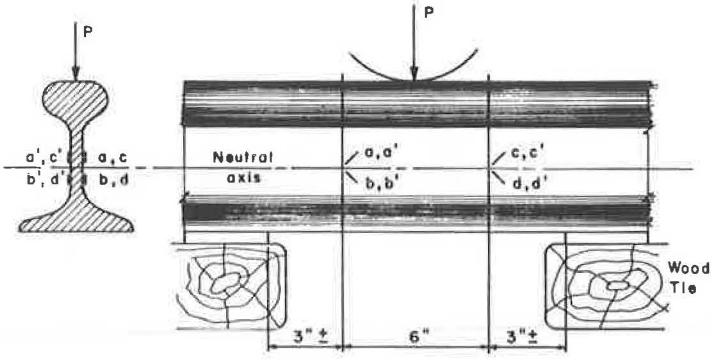

FIGURE 4 Arrangement of gauges in a typical shear-load circuit.

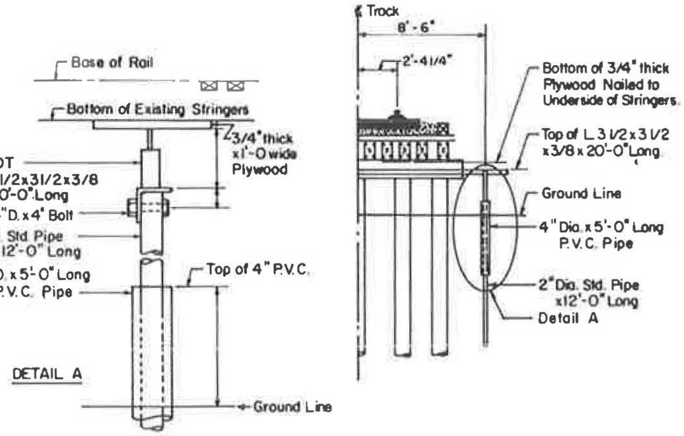

FIGURE 5 Support system for LVDTs.

amplifiers that, in turn, were also hooked to the data acquisition system.

Data Acquisition System

A 16-channel Techmar Lab Master Data Acquisition System connected to an IBM-PC coprocessor was employed for recording loads, displacements, and accelerations measured from the moving test trains. The rate of acquisition was 1,600 readings per second for one channel. A Nicolet Explorer digital oscilloscope with two channels was used for selective viewing of plots and storing information on loads at wheel-rail interfaces and vertical displacements during the tests.

A Hewlett-Packard spectrum analyzer equipped with an x-y plotter was connected to the main circuitry for viewing and plotting the accelerations during the tests. An additional IBM personal computer complete with printer and plotter was also available at the site to obtain hard copies of the data and time plots immediately after each test run. This arrangement permitted simultaneous recording of measurements on 16 channels plus instant viewing and storing of selective information on another 4 channels.

The data acquisition system and other pieces of equipment were housed in an air-conditioned truck-trailer unit 40 ft long that had its own 5-kWh regulated power supply. A view of the truck and the equipment inside the trailer is shown in Figure 7.

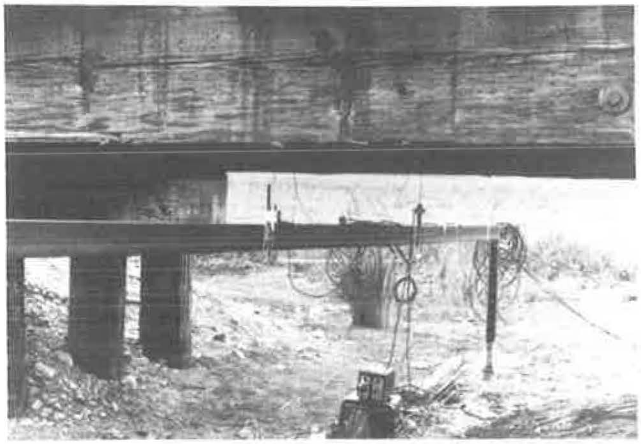

FIGURE 6 LVDT support system for second bridge.

TESTS

Field tests were carried out on two different days. On July 11, 1986, series of static and dynamic tests were conducted at Site 1. The dynamic tests included runs of a full test train followed by runs of a locomotive at different speeds. On September 16, 1986, tests were run at Site 2, and some of the dynamic tests at Site 1 were repeated.

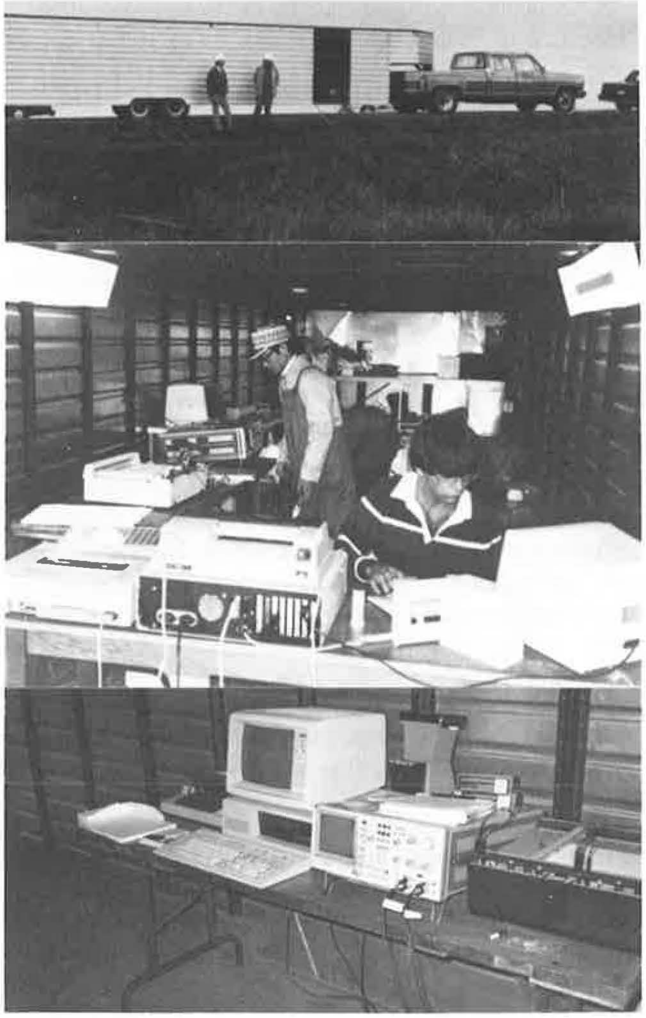

FIGURE 7 Test equipment in truck trailer.

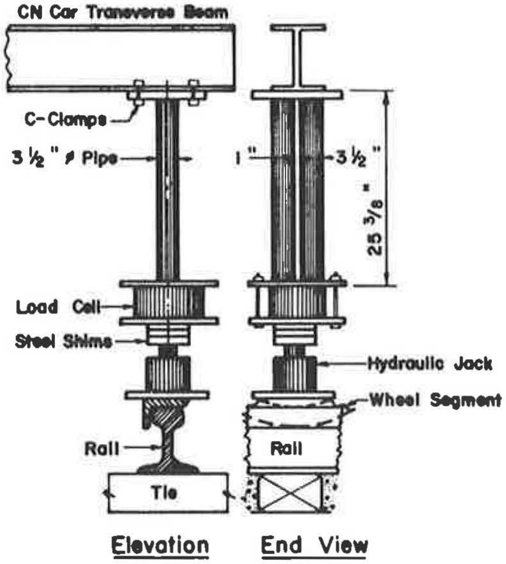

FIGURE 8 Setup for calibration test.

FIGURE 9 Calibration test in progress.

Calibration Tests

Static tests were conducted to calibrate the shear-load circuits installed on the rails as well as to determine the load displacement characteristics of the bridges, the approaches, and the track sections.

The midpoint of one of the hopper cars was centered over one of the load measurement locations. A load well, a jack, and a segmented railway car wheel were placed between the transverse beam of the carbody and the rail at each of the two rail points, as shown in Figures 8 and 9. The segmented wheels were used on rails to simulate the actual wheel-rail load conditions for static situations. This system was used to calibrate all of the shear circuits installed at both locations. The loads were applied by hydraulic jacks operated by a hand pump to a maximum of 30 kips per rail.

Test Procedure

Tests at Site 1 were conducted while the deck and the bridge timbers were wet after a heavy rainfall. There was also an unexpected amount of water under the bridges. These conditions resulted in malfunction of a few gauges. The dynamic tests were carried out with Test Train 1 running at crawl speed (i.e., 1 mph), 5, 10, 15, 20, 30, 40, and 50 mph, and measurements of loads, displacements, and accelerations were recorded and stored on floppy diskettes.

The locomotive was then uncoupled from the rest of the test train, and tests were carried out with the locomotive running alone at crawl speed, 5, 10, 20, 30, 40, and 50 mph, and the measurements were recorded and stored on diskettes.

Because weather conditions at Site 2 became worse than than they had been at Site 1, it was decided to postpone the remaining tests until another day.

The second series of tests took place on September 16, 1986. The tests commenced at Site 2 after the gauges had been installed and verified the day before. Calibration of the load circuits was done first, and then the dynamic tests were carried out using Test Train 2 running at crawl speed, 5, 10, 15, 20, 30, 40, and 50 mph. Runs at crawl speed and 30 and 50 mph were repeated several times, and some of the data were also recorded on the Nicolet oscilloscope for comparison with those stored on the Techmar Lab Master. No uncoupling of the locomotive was attempted at the second site. The same test train was moved to Test Site 1. The dynamic tests were repeated at Site 1 with Test Train 2 running at crawl speed, 10, 30, and 50 mph. Again, a few additional runs were made at 30 and 50 mph and some of the data were also recorded on the Nicolet oscilloscope. For all dynamic tests, the speed of the test trains was maintained by the engineman in the cabin. A Decatur Ray Gun speed-measuring device (i.e., a radar) was also used to verify the actual test speeds. Readings from both sources corresponded well except at speeds of 5 mph and below, for which the cabin readings were found to be more reliable.

TEST RESULTS

The experimental work at both sites involved 12 calibration tests and 40 dynamic tests. These yielded a massive amount of data, the full treatment of which is beyond the scope of this paper. Therefore only a sample of the data and the highlights of some of the findings will be presented here.

Calibration Tests

The calibration plots of the shear-load circuit at the midspan of the bridge, the approach, and the track section at both sites are shown in Figure 10. It was found that the bridge spans were stiffer than the approaches and, in turn, the approaches were stiffer than the track sections. Similarly, the ballast-deck bridge span was found to be stiffer than the open-deck bridge span.

The test results also indicated that the load displacement curves for the bridge spans were fairly linear, whereas those for the approaches and the track sections were nonlinear, within the range of the measurements.

Loads at Wheel-Rail Interfaces

The loads at the wheel-rail contact points for a railway vehicle in motion may depend on the following factors:

1. Static weight of the vehicle;
2. Dynamic forces due to wheel-rail irregularities on the running surface, such as wheel out-of-roundness, wheel flats, and rail joints;
3. Dynamic forces generated by the suspension system of the vehicle in motion, such as bounce, sway, roll, pitch, and yaw;
4. Track geometry irregularities, such as gauge, cross levels, surface, and line;
5. External disturbances such as wind, self-excited car hunting forces, and traction and braking forces; and
6. Speed of the vehicle.

When the vehicle passes over a bridge span, the characteristics of the span also affect the loads at wheel-rail interfaces, which continuously fluctuate about their static values. Figure 11 shows a typical plot of loads versus time for the midspan of the second bridge at 30 mph. The influence of some of the previously mentioned factors is evident from the variation of values of loads with respect to time at the two contact points.

Table 2 gives the maximum measured values of the loads at wheel-rail interfaces. The ratios of the measured wheel-rail contact loads to the static weights of wheels (i.e., dynamic load factor, DLF = Ld/Ls) were calculated and plotted against the speed for the bridge spans, the approaches, and the track sections. Typical behavior at the midpoint of the open-deck bridge span under Test Train 2 is shown in Figure 12. It may be noted that the values of the dynamic load factors increase as the speed increases. The upper limit indicates a variation of from 16 to 49 percent for speeds of up to 50 mph.

These dynamic load factors (DLFs) were also plotted against the static wheel loads (Figure 13). In general, DLFs decrease with an increase in static wheel loads. This may be because heavier axles are more stable because the weights of their wheels are more evenly distributed, a condition that helps reduce the vibrations due to the rolling action of vehicles.

Vertical Displacements

Figure 14 shows a typical plot of the measured vertical displacement versus time at midspan of the second bridge for Test Train 2 at 30 mph. Table 3 gives the maximum measured values of the vertical displacements.

The ratios of the measured maximum displacement values to the computed static displacements as well as the displacements at crawl speed (i.e., the dynamic displacement factors, DDF = Dd/Dsc and DDF = Dd/Dcr, respectively) for mid-

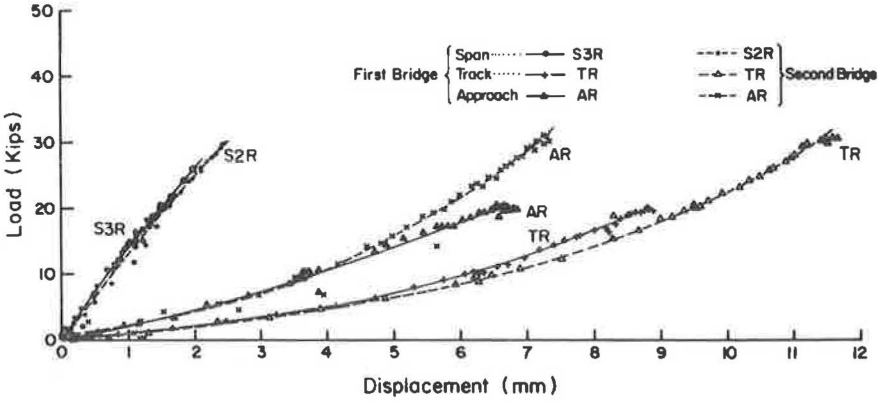

FIGURE 10 Results of calibration test.

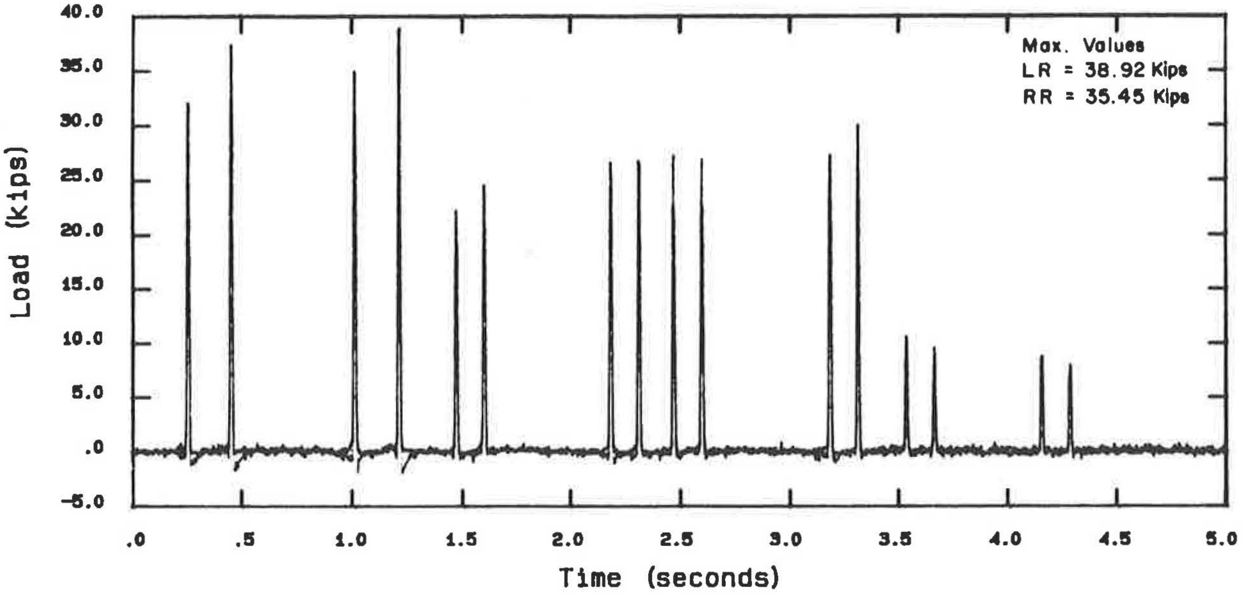

FIGURE 11 Typical measured load versus time for midspan of second bridge at 30 mph.

TABLE 2 MAXIMUM MEASURED LOADS AT WHEEL-RAIL INTERFACES

a) Test site #1 - test train #2

Speed	Span #S3		Approach		Track	
(mph)	Static	Dynamic	Static	Dynamic	Static	Dynamic
1	31.45	34.51	31.45	34.14	31.73	35.31
30	31.45	36.04	31.73	40.63	31.73	38.43
50	31.73	36.00	31.73	50.93	31.73	43.60

b) Test site #2 - test train #2

Speed	Span #S2		Approach		Track	
(mph)	Static	Dynamic	Static	Dynamic	Static	Dynamic
1	31.73	34.62	31.73	36.43	31.73	35.30
30	31.45	40.17	31.73	41.26	31.45	38.43
50	31.73	34.57	31.45	40.00	31.73	39.21

points of the spans were plotted against train speed and are shown in Figure 15.

The values of the maximum static displacements were calculated assuming that the chords behaved as simply supported beams. It may be noted that for the open-deck bridge span the value of the DDFs increases with an increase in the speed (i.e., Dd/Dsc varies from 2.1 to 2.7 and Dd/Dcr from 1.0 to 1.3 at speeds of 50 mph). On the other hand, speeds of up to 50 mph did not appear to have any effect on the ballast-deck bridge span for which average values of Dd/Dsc = 1.7 and Dd/Dcr = 1.0 were obtained.

Accelerations

A typical output of measured acceleration versus time at the midspan of the second bridge for Test Train 2 at 30 mph is shown in Figure 16. It was noted that the range of the measured accelerations widened as the speed increased. For the ballast-deck bridge, the maximum acceleration ranged from +10.08 *g* to −7.00 *g*, but, unfortunately, for the open deck-bridge at 20 mph and beyond, the range exceeded the measurement limit of the instrumentation, which was set at +10.08 *g*.

Damping in Bridge Spans

The logarithmic decrement technique was applied to the free vibration portion of the acceleration versus time plots for midpoints of the bridge spans to compute the damping coefficients as a percentage of the critical damping. There was a fair amount of spread in the values obtained. However, the average values of the coefficients were found to be 9.8 percent for ballast-deck span S3 and 6.2 percent for open-deck span S2.

SUMMARY

Analysis of the data obtained from the tests at the two sites led to the following conclusions:

1. Factors such as track irregularities, wheel running surface irregularities, and rolling and hunting of cars appeared to have a significant effect on loads at wheel-rail interfaces, vertical displacements, and accelerations.
2. The load-deflection behavior of the bridge spans was found to be fairly linear, in contrast with the nonlinear behavior of the approaches and the track sections. The ballast-deck bridge span was found to be stiffer than the open-deck one. Both bridge spans were substantially stiffer than the approaches, which, in turn, were stiffer than the track sections.
3. For both types of bridge spans, the dynamic load factors (DLFs) were found to increase in value with increasing train

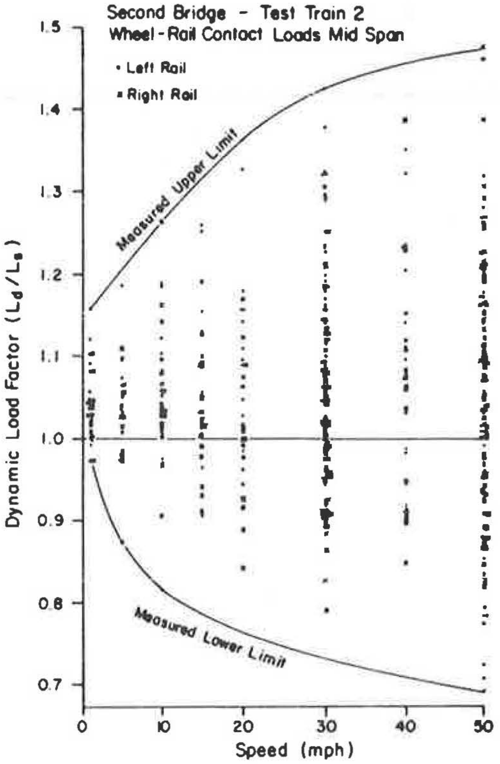

FIGURE 12 Effect of speed on dynamic load factor.

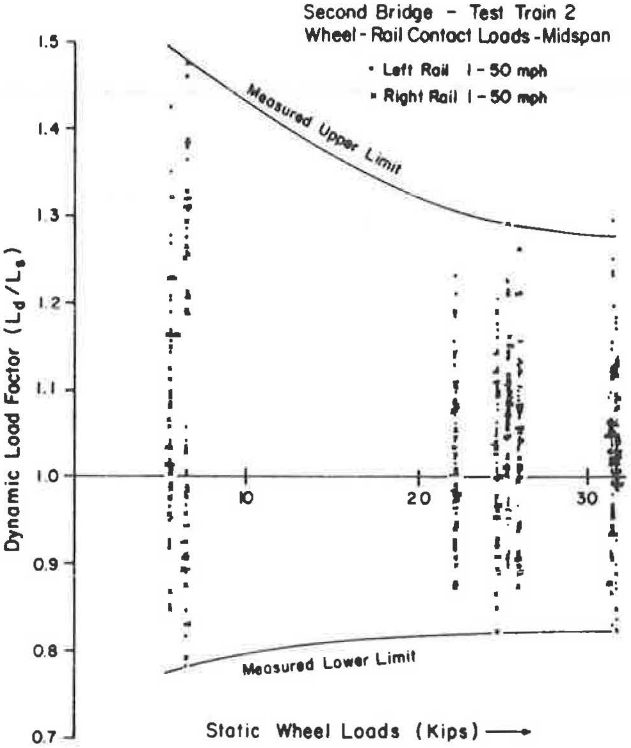

FIGURE 13 Effect of static wheel load on dynamic load factor.

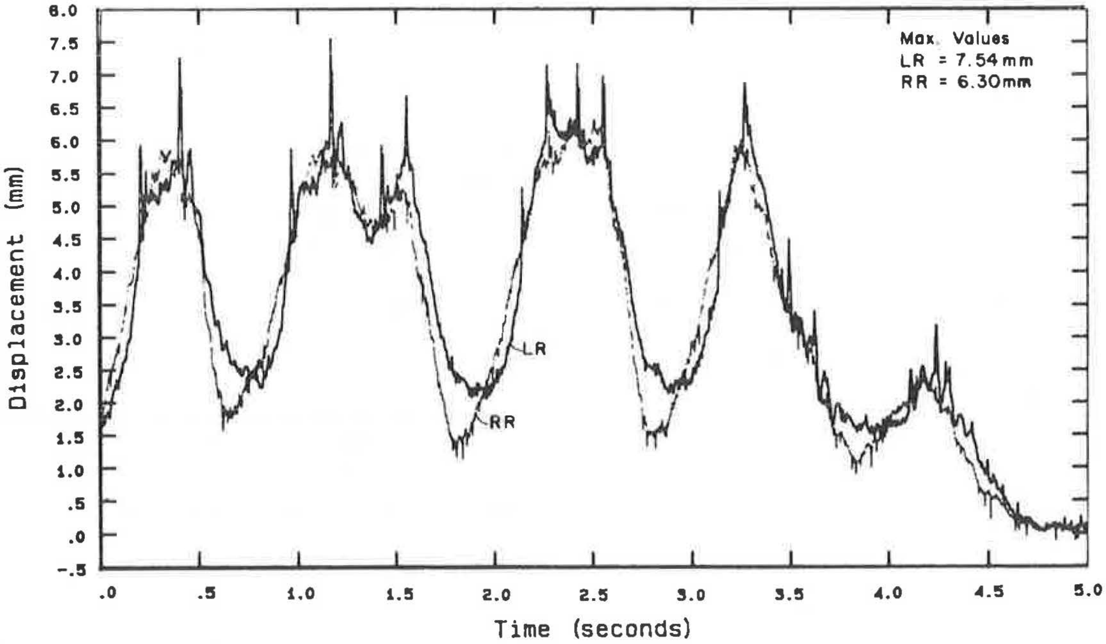

FIGURE 14 Typical vertical displacement versus time for midspan of second bridge at 30 mph.

TABLE 3 MAXIMUM MEASURED VERTICAL DISPLACEMENTS

a) Test site #1 - test train #2

Speed	Span #3		Span #2		Track	
(mph)	L Rail	R Rail	L Rail	R Rail	L Rail	R Rail
1	5.22	4.03	-	4.10	11.92	10.14
30	5.46	4.00	-	4.14	12.43	9.89
50	5.39	4.17	-	4.71	13.31	11.12

b) Test site #2 - test train #2

Speed	Span #2		Approach		Track	
(mph)	L Rail	R Rail	L Rail	R Rail	L Rail	R Rail
1	6.29	6.36	9.77	10.02	13.13	12.13
30	7.54	6.43	9.45	10.16	13.87	13.12
50	8.11	8.32	9.80	9.71	15.66	13.58

NOTE: Values are in millimeters.

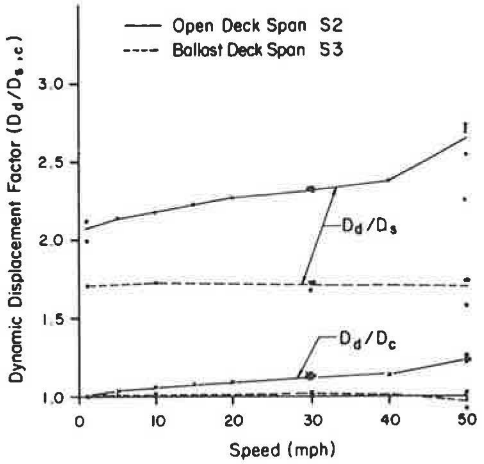

FIGURE 15 Effect of speed on dynamic displacement factor.

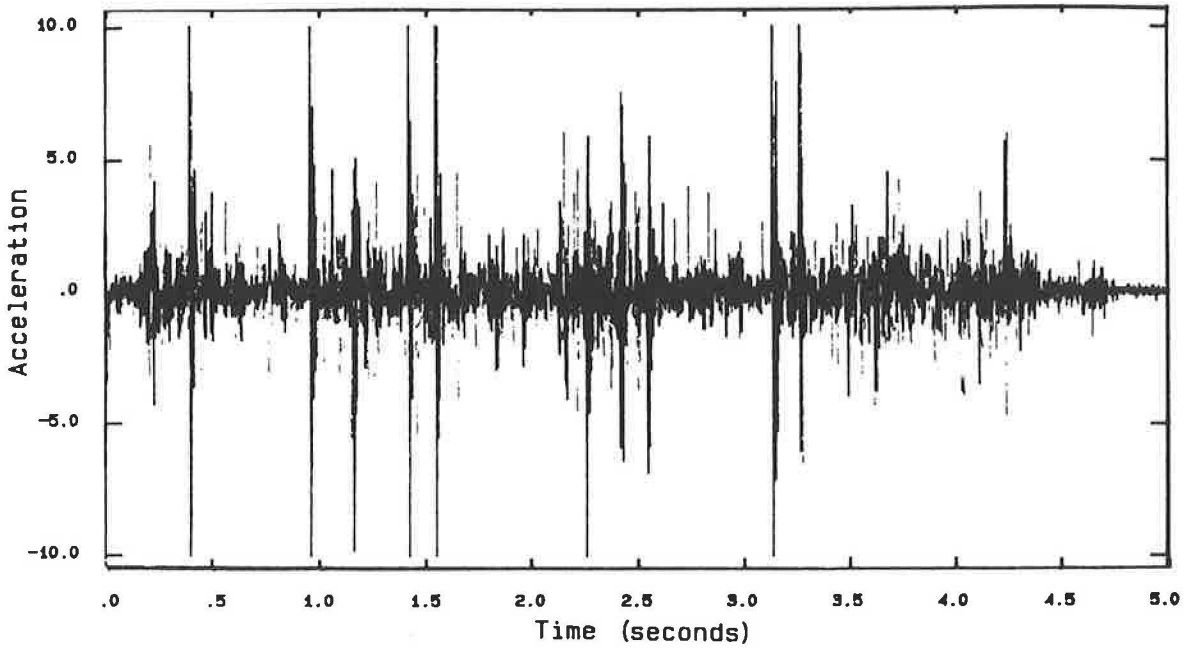

FIGURE 16 Typical measured acceleration versus time for midspan of second bridge at 30 mph.

speed. The maximum value of DLF measured was 1.49 at 60 mph. The DLFs were also found to decrease with increasing static wheel loads.

4. For the open-deck span, the dynamic displacement factors (DDFs) increased with increasing speed and had a maximum value of 1.316 over crawl speed. On the other hand, speeds of up to 50 mph did not show any effect on the ballast-deck span.

5. The range of acceleration widened with increasing train speed. At speeds above 20 mph, the values started to exceed the measurement range of +10.08 *g*.

6. Although both types of bridge spans appeared to be heavily damped, damping in the ballast-deck span was approximately 50 percent more than in the open-deck span.

ACKNOWLEDGMENTS

This study was carried out in the Department of Civil Engineering at the University of Manitoba with financial assistance from the Transportation Institute of the University of Manitoba. The authors are indebted to the Canadian National Railway and, in particular, to the Regional Chief Engineer, R. D. Miles, for permission to use the test facilities.

REFERENCES

1. J. R. Williams and K. J. Norton. Decay in Timber Trestles: What Is Its Rate of Growth? *Railway Track and Structures*, April 1976.
2. *Manual for Railway Engineering*. American Railway Engineering Association, Washington, D.C., 1986, Chapter 7, Timber Structures, pp. 7-2–7-24.
3. Tests of an Open Floor Wood Pile Trestle—Missouri-Kansas-Texas Railroad. In *Impact and Bridge Stresses*, Advance Report of Committee 30, Association of American Railroads, Washington, D.C., 1949, pp. 103–105.
4. Tests of a Ballasted Floor Wood Pile Trestle—Southern Railway System. In *Impact and Bridge Stresses*, Advance Report of Committee 30, Association of American Railroads, Washington, D.C., 1949, pp. 121–125.
5. *Measurements and Their Analysis in Railway Technology*. Report 1. 5th ORE/BVFA International Colloquium on Railway Vehicle Technology, Vienna, Austria, May 6–8, 1969.
6. D. R. Ahlbeck, M. R. Johnson, H. C. Harrison, and J. M. Tuten. *Measurement of Wheel/Rail Loads on Class 5 Track*. Report FRA/ORD-80/19. Office of Research and Development, Federal Railroad Administration, U.S. Department of Transportation, Feb. 1980.

Publication of this paper sponsored by Committee on Railroad Track Structure System Design.

Long Island Rail Road Bridge Infrastructure

MOHAMMAD S. LONGI

The Long Island Rail Road (LIRR) bridge infrastructure comprises 396 railroad bridges. Most of the bridges were built in the early 1900s, and some were constructed as early as the 1890s. Because of their age and exposure to ever-increasing static and dynamic loading, many of these structures have reached or are nearing their useful service life. The LIRR's $2.0 billion, 10-year (1982–1991) Capital Improvement Program provided an opportunity and challenge to priority rank some of these bridges and program them for rehabilitation or replacement. Three of the projects are reviewed, and the LIRR bridge data base, load rating program, and bridge management process are discussed.

The Long Island Rail Road (LIRR) system comprises 396 railroad bridges. The system is subdivided into 15 branches (corridors) for bridge identification purposes. The various branches of the LIRR are shown in Figure 1. One hundred ninety bridges are located in the boroughs of Queens and Brooklyn in New York City. The remaining 206 bridges are on Long Island; Nassau and Suffolk counties have 116 and 90 bridges, respectively. The Montauk Branch has the largest number (148) of bridges, whereas the Bushwick Branch has the distinction of having the smallest number (2) of bridges. Table 1 gives the number of bridges, branch route miles, and bridge miles. The total route mileage on the LIRR system is 335.4 mi, of which nearly 12 mi are bridges. This translates to bridges being 3.6 percent of the system route miles. Table 2 gives the various types and numbers of bridges by branch.

Most of the bridges were built in the early 1900s, and some were constructed as early as the 1890s. Because of their age, exposure to weather, exposure to steam locomotives in the past, and increasing static and dynamic loading, many of these structures have reached or are nearing their useful service lives.

The LIRR has mixed operating conditions because the same bridges have to accommodate high-speed light passenger (electric) trains, heavy diesel passenger trains, and occasional slow, heavy tonnage freight trains (*1*). The LIRR operates about 850 trains on an average weekday, of which 700 are electric trains and 150 are diesel trains. The rolling stock ranges from the 270,000-lb (67.6-kip axle load) heaviest diesel locomotives to 100,000-lb (26.2-kip axle load) electric M-3 trains.

Nearly 60 percent of the LIRR's main-line tracks are electrified by third (contact) rail (*1*). The running rails are also used as negative returns for power. Some of the old steel bridges exhibit significant corrosion. However, whether stray currents are one of the contributing factors has not been quantified or studied. In reinforced and prestressed concrete structures, there is no apparent evidence of stray current damage (corrosion). The deterioration present in some of the older reinforced concrete bridges and viaducts appears to have been caused by poor drainage, the age of the structure, lack of maintenance, inadequate concrete cover over reinforcement, and deicing salts used for snow and ice mitigation in viaducts with passenger station platforms.

The new bridge structures are designed to the American Railway Engineering Association (AREA) Cooper Railway Loading, at present E-80. However, in the case of repair and strengthening schemes, the procedure is to conduct repairs to bring the structure or the component to at least its "as-built" condition.

REVIEW OF BRIDGE PROJECTS

In 1982 the Long Island Rail Road, with funds from its Capital Improvement Program or operating budget, embarked on various bridge projects. Three of the major projects are reviewed here.

Manhasset Viaduct

Description

The Manhasset Viaduct is located west of Manhasset Station on the Port Washington Branch of the LIRR. A view of the viaduct is shown in Figure 2. The Manhasset Viaduct is a single-track, open-deck structure built in 1897–1898. The structure has a tangent alignment.

The viaduct has 15 spans that, except at the viaduct ends, are approximately 75 ft above ground. The original construction entailed riveted deck girders supported by stone abutments and steel bents on concrete footings. The west approach span is 90 ft long. The tower spans are 30 ft long, and the intermediate spans are 54 ft long. Figure 3 shows the elevation of the Manhasset Viaduct.

According to the design drawings, the east end of all 54-ft spans and the west end of the 90-ft span are free to move longitudinally; hence the structure is not subject to thermal forces (*2*).

The towers are fully x-braced in both the longitudinal and transverse direction; hence the columns support axial loads only. The tower legs are inclined 1:6 in the transverse direction to provide resistance to lateral forces. The longitudinal bracing is designed for tension and compression, whereas the

---

Structural Maintenance, The Long Island Rail Road Company, Sutphin Boulevard–Jamaica Station, Jamaica, N.Y. 11435.

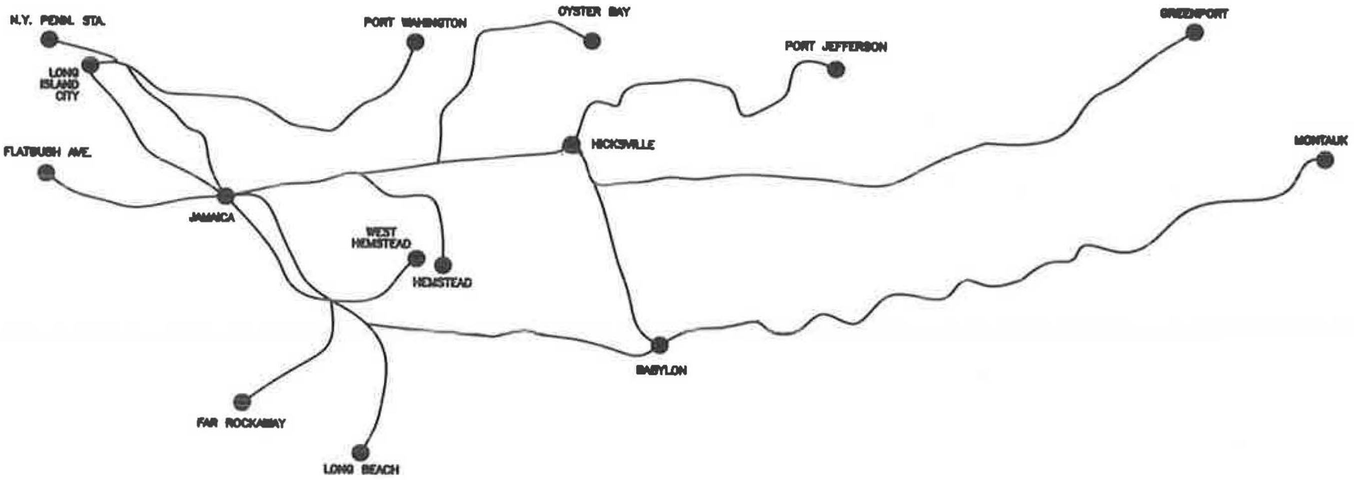

FIGURE 1 LIRR system map.

TABLE 1 INVENTORY OF LIRR BRIDGES

BRANCH	NUMBER OF RAILROAD BRIDGES	LENGTH OF BRANCH IN ROUTE MILES	TOTAL LENGTH OF BRIDGES IN ROUTE MILES
MAIN LINE	94	94.3	1.49
MONTAUK	150	115.8	6.54
NORTH SHORE	1	2	
MONTAUK CUT OFF	10	1	0.21
ATLANTIC	27	15.8	2.03
PORT WASHINGTON	25	16.3	0.59
BAY RIDGE	21	13	
WEST HEMSTEAD	5	4.6	0.44
HEMSTEAD	8	4.9	0.05
FAR ROCKAWAY	4	5	0.02
BUSHWICK	2	1.8	0.03
OYSTER BAY	15	14.3	0.22
PORT JEFFERSON	19	32.5	0.30
LONG BEACH	9	6.9	0.02
CENTRAL	6	7.2	0.06
BRANCH	396	335.4	12.0

transverse bracing is effective for carrying tension only because of its slenderness.

In 1938 the tower over Shore Road was modified by the addition of four vertical columns braced longitudinally and transversely as is the original tower. The new columns support the adjacent 54-ft spans leaving the original tower to carry only the 30-ft span within the tower. The new and old towers share any longitudinal forces, whereas the original tower is primarily effective in carrying transverse forces because of its inclined legs.

The project was programmed in different phases given the funding available at the time:

Scope of Work	*Year*
Report of condition survey	1980
Report of inspection, repair, and painting—Phase I	1983
Report of inspection, repair, and painting—Phase II	1983
Final design for renovation and painting—Phase III	1986
Construction	1987–1989

Findings of 1983 Inspection

Girders The girders had corroded significantly along the top and bottom flanges and on the upper surfaces of lateral connection plates. Webs of the girders were generally in good condition, although some localized rusting was present in areas where paint was not adhering tightly.

The amount of deterioration varied widely from point to point, but all girders had areas where the top cover plate was significantly reduced. At locations on the girders where the timber ties had previously been shifted, conditions were also variable. In the worst cases, the deterioration under the ties was considerably more extensive than in the adjacent spaces; there were deep craters around the rivet heads.

Towers The bent caps between girders were generally deteriorated at the outstanding leg of the bottom flange angle. However, previous maintenance repairs has remedied the deficiency by the addition of plates welded and spliced across the bottom of the cap beam.

Columns were in excellent condition and are stronger than originally built because of the addition of cover plates.

Footings and Abutments Footings for Bents 13 and 14 were badly deteriorated. At the east abutment, the girder ends were recessed into the backwall. The girder is intended to be free to expand and contract at the abutment. However, the backwall was restricting that movement, forcing both expansion and contraction to occur at the expansion end of Span 13-14.

TABLE 2 TYPES OF BRIDGES ON VARIOUS BRANCHES

BRANCH	BRIDGES	THRU PLAT. GIRDER	DECK PLAT GIRDER	I BEAM	TRUSS	CONC. BRICK ARCH	PRE-STRESS STRUCTURE	TIMBER OR TRESTLE
MAIN LINE	94	54	20	13	–	5	1	1
MONTAUK	150	88	25	13	2	5	16	1
NORTH SHORE	1	–	–	–	1	–	–	–
MONTAUK CUT OFF	10	3	6	1	–	–	–	–
ATLANTIC	27	16	8	3	–	–	–	–
PORT WASHINGTON	25	18	3	1	–	1	–	2
BAY RIDGE	21	8	11	–	1	1	–	–
WEST HEMSTEAD	5	4	–	–	–	1	–	–
HEMSTEAD	8	5	1	1	–	1	–	–
FAR ROCKAWAY	4	4	–	–	–	–	–	–
BUSHWICK	2	1	–	–	–	–	–	1
OYSTER BAY	15	7	2	1	1	4	–	–
PORT JEFFERSON	19	9	4	5	–	1	–	–
LONG BEACH	9	2	3	1	–	–	–	3
CENTRAL	6	6	–	–	–	–	–	–

FIGURE 2 View of Manhasset Viaduct.

Load Rating

Girders and columns of the viaduct were rated, according to the AREA Manual (Chapter 15, Part 7, Existing Bridges, 1984), for their as-built and as-inspected conditions (*3*).

Ratings were computed on the basis of open-hearth steel. If its nitrogen content is below 0.004 percent, or if it is not more than 0.012 percent and the phosphorus content is below 0.04 percent, steel can be considered open hearth. The steel samples tested fell into the latter category. A summary of the ratings is given in Table 3.

The as-inspected ratings were governed by the 30-ft spans with ratings as low as E-51, followed by the 54-ft spans with a lowest rating of E-63. The 90-ft span and columns all rated higher than their as-built conditions. The 30- and 54-ft spans

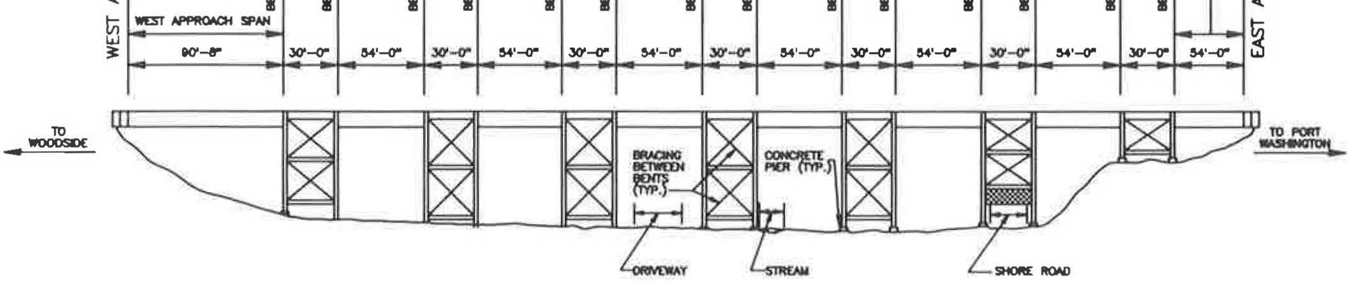

FIGURE 3 Elevation of Manhasset Viaduct.

TABLE 3 SUMMARY OF RATINGS

GIRDERS	AS—BUILT	AS—INSPECTED
WEST APPROACH SPAN	E73	E90
THIRTY—FOOT SPANS		
1—2	E63	E51
3—4	E63	E54
5—6	E63	E51
7—8	E63	E53
9—10	E63	E55
11—12	E63	E54
12—13	E63	E54
FIFTY—FOUR FOOT SPANS		
2—3	E69	E63
4—5	E69	E67
6—7	E69	E67
8—9	E69	E64
10—11	E69	E66
12—13	E69	E67
14—15	E69	E67
COLUMNS		
BENT 1	E93	E138
BENT 2	E98	E151
BENT 3—10	E98	E194
BENT 11—12	E106	E106
BENT 11—12 (NEW)	E142	E142
BENT 13—14	E92	E171

possibly could be subject to fatigue, whereas the 90-ft span should not be affected by fatigue.

Strengthening Schemes and Recommendations

Some of the criteria used in formulating repair and strengthening schemes follow:

- To the maximum extent possible, train operations are to be maintained without interruption.
- Strengthen members to rate as high as or higher than their as-built condition.
- Design new members according to the allowable stresses of present design standards.
- High-strength bolting is preferred to welding for field connections, especially in tension zones.
- Cost-saving approaches consistent with good design are to be pursued.

Three strengthening schemes were investigated:

Scheme 1: Adding Plates Below Existing Flanges This scheme requires welding plates to the girder between the flanges. Plates are added top and bottom for the 30-ft span, but bottom only for the 54-ft spans. Strengthening would bring the overall rating to E-65.

Scheme 2: Prestressing This scheme entails applying a prestressing force along the bottom flanges of the girder. A single high-strength bar attached below the bottom flange and stressed to approximately 100 ksi would be sufficient to raise the ratings of the 30- and 54-ft spans to their as-built level. Recently, this technique has been used on highway bridges in Iowa. The prestressing force can increase girder capacity; however, it does not reduce the stress range, which is regarded as an important parameter for susceptibility to fatigue cracking. The prestressing force does not significantly increase the section modulus of the girder. The overall strengthened rating using this methodology would be E-70.

Scheme 3: Span Replacement This scheme entails replacing spans one at a time during weekends, when the trains terminate at stations located east (Manhasset Station) and west (Great Neck Station) of the viaduct. Commuters would need to be bused.

New girder spans would be designed to carry E-80 loading and would rate in the E-110 range. They can be designed to require no maintenance for many years by using special protection on the top horizontal surfaces. The Canadian Pacific Railroad has found zinc metallizing topped by a vinyl coating to be effective treatment for top flanges of girders and other horizontal surfaces that hold water and debris.

Galvanizing was considered for the new girders. However, because of size limitations of galvanizing tanks, it was not practical to galvanize the 54- and 90-ft girders.

Because of the high cost of field repairs and the limited strength gains achieved in Schemes 1 and 2, the replacement of complete spans can be financially competitive, providing many long-term benefits, if it can be done without undue interruption of railroad traffic.

Cost Considerations and Ramifications

Preliminary construction cost estimates prepared in 1983 follow:

Scheme	*Cost ($)*
1	2,184,000
2	1,234,000
3	1,480,000

Scheme 1 is uneconomical. Scheme 2, utilizing the prestressing approach, is a relatively simple and economical technique that is the least costly of the three alternatives. However, Scheme 3, entailing span replacement, is within a reasonable range of the cost of the prestressing scheme, considering that a much higher rating is obtained by this scheme. In addition, it can provide a maintenance-free superstructure for many years.

Scheme 3 was the recommended scheme, and design documents were prepared and contracts awarded for construction in late 1987.

English Kills Drawbridge (fixed)

Description

The English Kills Drawbridge (presently fixed) carries single-track freight service over English Kills on the Bushwick Branch in Brooklyn, New York. The existing steel bobtail swing bridge was designed as a temporary bridge in 1888 and was rehabilitated between 1907 and 1927. The bridge is presently fixed in place; however, closed-position clearances are 46 ft horizontally and 9 ft (low tide) and 4 ft (high tide).

The support structure comprises a stone masonry pivot pier and two stone masonry rest piers, all assumed to be supported on timber cribbing and timber piles.

The superstructure has two deck plate girders that are 97-ft-long longitudinal steel girders, with diaphragms and top and bottom lateral bracing, that provide two unequal spans of 67 ft 6 in. across the channel and 29 ft 6 in. for the bobtail.

Inspection Findings

An in-depth inspection was performed in August 1982. Some of the major findings follow:

- Stone masonry rest piers and pivot piers were in fair to poor condition.
- The two built-up longitudinal girders were in poor condition. Webs of both girders were heavily deteriorated with $^3/_{16}$- to $^1/_4$-in. losses and many small holes in the web of the south girder. The majority of severe losses to the top flange occurred under railroad ties.

Structural Analysis and Rating

A structural analysis of the bridge was conducted to determine the operating rating of the structure using AREA Manual procedures for both as-built and present conditions. The following allowable stresses were used: steel, medium open hearth; yield stress = 30 ksi; tension = 0.8; yield stress = 24 ksi; and shear = 18 ksi.

In addition to being rated for Cooper E loading, the longitudinal girders were analyzed using the estimated dead load of an LIRR freight train with diesel engine impact. Table 4 gives the results of the rating analysis. Substructure plans were not available, so the substructure was not rated.

The results of the structural analysis and evaluation of the load-carrying capacities of the main structural components of the bobtail swing indicated that the span is only marginally adequate to carry Cooper E-36 loading. This is satisfactory for the L-2 type of freight train the LIRR presently uses. However, the bridge does not meet the current AREA Cooper E-80 loading. The unknown history of loading and repair by welding with considerable variations in loading conditions makes the girders especially susceptible to fatigue-related problems and fracture mechanisms. Therefore the reliability of the calculated capacity is additionally suspect.

The bridge was again inspected in depth and rated in 1985 and 1987. The findings and the loading rating follow:

- The bridge, as a whole, was found to be in a state of deterioration similar to that revealed by the 1982 inspection.
- The measured loss of section to the critical point of the main girders was $^1/_4$ in. at the top cover plate, compared with the $^3/_{16}$-in. loss recorded in 1982.
- In calculating the rating of the bridge for live load capacity, this additional deterioration was taken into account but did not change the computed rating.

Cost Considerations and Ramifications

Studies were conducted for different types of bridge structures. Preliminary construction cost estimates ranged from $250,000 for a timber trestle to $1.27 million for a steel plate girder bridge.

At present, the LIRR provides freight service to one customer over this bridge. The bridge is presently being inspected more frequently (three to four times per year). The decision on the bridge is pending, subject to availability of funds and justification of proposed expenditures.

Reynolds Channel Trestle

Description

The Reynolds Channel Trestle is a single-track open-deck timber structure located over Reynolds Channel connecting Island Park to Long Beach, as shown in Figure 4.

The trestle was originally built around the turn of the century as a wooden swing bridge in the location of the current bridge. That wooden bridge was replaced by the present steel swing bridge in 1927. The trestle is 1,230 ft long not counting the movable bridge portion, which is 65 ft long. The trestle, in addition to normal maintenance, received extensive rehabilitation, particularly of its superstructure, during the 1970s (*4*).

The trestle and bridge provide access to the Long Beach Station, the Long Beach Branch's terminal station. A total of 88 trains consisting of 6 to 10 cars traverse the trestle each weekday.

The bents typically consist of five to nine wooden piles with a pile cap. The piles are randomly spaced timbers 12 to 14 in. in diameter.

The tops of the piles are connected to a 14-in.-square by 14-ft-long timber cap by steel spikes (drift pin) driven through the bent cap and into each pile (one each). The trestle has 112 bents. All of the timbers used in the structure have been treated with a preservative.

Four timber stringers (10 × 14 in.) are paired under each track rail and rest directly on the bents. Figure 5 shows a cross section of timber trestle.

Findings of Inspection and Rating

Findings In 1983 an in-depth inspection was conducted of the pile foundations, bents, and superstructure. Material samples from both the substructure and the superstructure were taken for laboratory testing. Some of the major deficiencies observed follow:

1. The most serious deterioration of the trestle structure was observed in the piles. During underwater inspection of piles, including probing, dry rot was observed in almost one-half of all piles. This deterioration is generally confined to the tidal zone (+2.1 to −1.8 ft above and below Mean Sea Level); the daily cycle of immersion and drying promotes the incidence of dry rot. Fortunately, the piles incapable of supporting a full or even a partial load were randomly distributed throughout the structure.
2. The pile caps are subjected to partial submersion on a daily basis.
3. Portions of the trestle appear to have sustained surface damage from fire.
4. Rotting, deterioration, and absence of lateral bracing were prevalent. A total of 152 of the possible 224 cross braces are missing, loose, split, or rotted.
5. The prevalence of dry-rotted piles suggests that the cut ends of these piles were either not treated or inadequately treated.
6. Numerous instances of out-of-alignment failed piles missing a "V" section were noted. No significant instances of marine borer damage were observed.

TABLE 4 RATING TABLE

SHEAR			A	B	C	D	
LONGITUDINAL GIRDER (ASSUMED SIMPLE SUPPORT)	ALLOWABLE STRESS (KSI)	AREA (IN)²	ALLOWABLE SHEAR (K)	DEAD LOAD SHEAR (K)	LIVE LOAD & IMPACT SHEAR COMPACITY (K)	COOPER E60 LIVE LOAD & IMPACT SHEAR (K)	COOPER E RATING
AS-BUILT							
66'-0" SPAN	18.0	13.5	243	18.2	225	235	57
24'-6" SPAN	18.0	22.4	403	6.7	396	131	60+
PRESENT							
66'-0" SPAN	18.0	13.5	243	18.2	225	235	57
24'-6" SPAN	18.0	11.2	202	6.7	195	131	60+

MOMENT			A	B	C	D	
LONGITUDINAL GIRDER	ALLOWABLE STRESS (KSI)	SECTION MODULUS (IN)³	ALLOWABLE MOMENT (K-FT)	DEAD LOAD MOMENT (K-FT)	LIVE LOAD & IMPACT MOMENT CAPACITY (K-FT)	COOPER E60 LIVE LOAD & IMPACT MOMENT (K-FT)	COOPER E RATING
AS-BUILT 66'-0" SPAN							
SIMPLE	24.0	1362	2724	300	2424	3436	42
CONTINUOUS	24.0	1362	2724	240	2484	2749	54
24'-6" SPAN							
SIMPLE	24.0	746	1492	42	1450	700	60+
CONTINUOUS	24.0	746	1492	34	1458	560	60+
PRESENT 66'-0" SPAN							
SIMPLE	24.0	1200	2400	300	2100	3436	36
CONTINUOUS	24.0	1200	2400	240	2160	2749	47
24'-6" SPAN							
SIMPLE	24.0	370	740	42	698	700	59
CONTINUOUS	24.0	370	740	34	706	560	60+

MEMBER	ALLOWABLE STRESS (KSI)	AREA (IN)²	ALLOWABLE SHEAR (K)	DEAD LOAD SHEAR (K)	LIVE LOAD & IMPACT SHEAR COMPACITY (K)	COOPER E60 LIVE LOAD & IMPACT SHEAR (K)	COOPER E RATING
AS-BUILT							
PIVOT GIRDER	18.0	42.0	756	25	731	275	60+
PRESENT							
PIVOT GIRDER	18.0	21.0	378	25	353	275	60+

MOMENT			A	B	C	D	
MEMBER	ALLOWABLE STRESS (KSI)	SECTION MODULUS (IN)³	ALLOWABLE MOMENT (K-FT)	DEAD LOAD MOMENT (K-FT)	LIVE LOAD & IMPACT MOMENT CAPACITY (K-FT)	COOPER E60 LIVE LOAD & IMPACT MOMENT (K-FT)	COOPER E RATING
AS-BUILT							
PIVOT GIRDER	24.0	1012	2024	62.5	1962	688	60+
PRESENT							
PIVOT GIRDER	24.0	506	1012	62.5	950	688	60+

COMBINED MOMENT & SHEAR			A	B	C	D	
MEMBER	AREA (IN)²	SECTION MODULUS (IN)³	ALLOWABLE DIAGONAL TENSION STRESS (KSI)	DEAD LOAD DIAGONAL TENSION STRESS (KSI)	LIVE LOAD & IMPACT DIAGONAL TENSION STRESS CAPACITY (KSI)	COOPER E60 LIVE LOAD & IMPACT DIAGONAL TENSION STRESS (KSI)	COOPER E RATING
AS-BUILT							
PIVOT GIRDER	42.0	1012	24.0	1.1	22.9	11.8	60+
PRESENT							
PIVOT GIRDER	21.0	506	24.0	2.2	21.8	23.6	55

$$E\ RATING = \frac{(A-B) \times 60}{D} = \frac{(C) \times 60}{D}$$

"PRESENT" MEMBERS INCLUDE SECTION LOSSES AND ASSUME RIVETS PROVIDE INTEGRITY OF SECTION. RELIABILITY OF SECTION INTEGRITY IS SUSPECT; PARTICULARLY IN AREA ADJACENT TO COUNTERWEIGHT.

FIGURE 4 **Reynolds Channel timber trestle.**

Load Rating The purpose of this analysis was twofold. First, it was intended to provide an indication of the structural strength of the trestle as it existed. Second, it was to determine the structural strength the trestle could possess if fully rehabilitated.

During this analysis, it was found that the bents could not support the projected longitudinal force acting on the trestle. It was therefore necessary to conduct the analysis by factoring in the rails' transference of that longitudinal force to the banks at each end of the trestle. AREA permits the use of this assumption for the design of piles by reason of the continuity of the rails from embankment to embankment, except in the section of swing bridge with the subsequent frictional resistance of the rails and ties over the embankments. The embankments are acting to stabilize the trestle longitudinally. The Cooper E ratings for the five selected bents follow:

Bent No.	*Piles*	*Cap*	*Bracing*
S-27	E-17	E-25	3-19
S-76	E-15	E-21	L/D allowable
N-4	E-22	E-25	E-24
N-6	E-0	E-0	Missing
Baseline	E-12	E-17	

The pile cap capacity of the baseline bent was found to be low because most of the vertical loads apply to the center piles and, consequently, are not shared equally among all of the piles.

The following ratings of the remaining bents were made by comparing baseline bent results with the field inspection report:

Cooper Rating	*No. of Bents*
E-22 to 25	23
E-17 to 22	34
E-15 to 17	23
E-12 to 15	15
Less than E-12	7
	102

The current loading of the trestle with LIRR electric trains (M-3) is equivalent to E-17 Cooper loading. The characteristics of wood structures and the basically sound

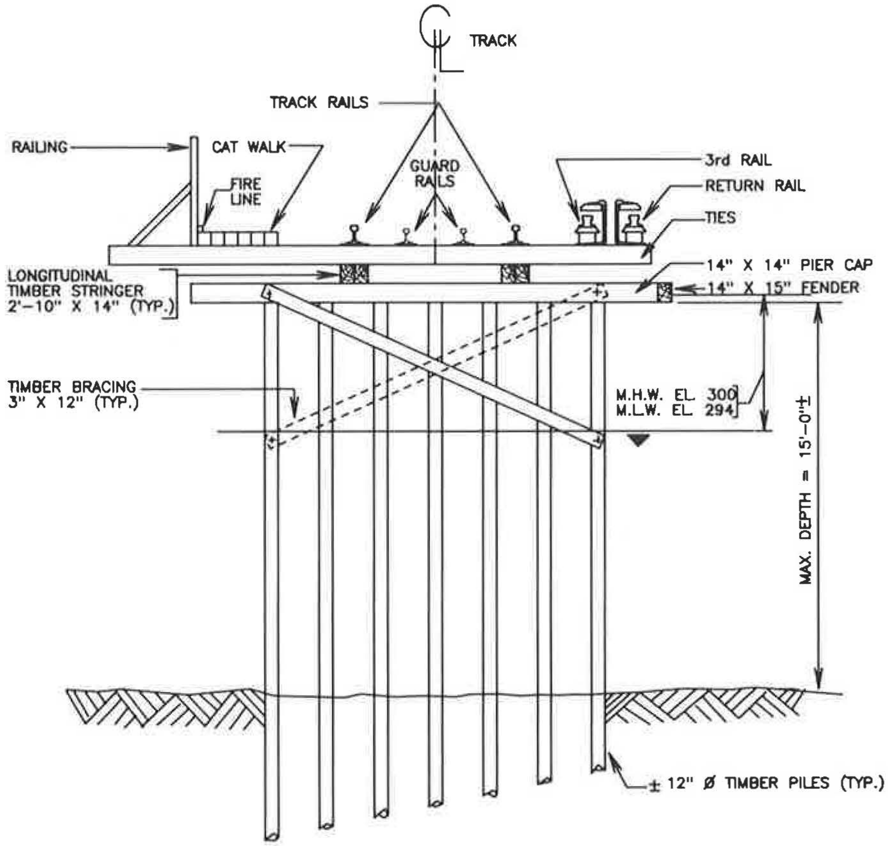

FIGURE 5 **Cross section of timber trestle.**

condition of the superstructure, coupled with the relatively even distribution of the bents rated below E-17, have apparently permitted the trestle to continue to function.

The stringer analysis was completed using the assumption that the stringers have partial continuity over the support. Given this assumption, based on field observation, the stringers can support approximately Cooper E-33 loading.

In summary, the timber trestle superstructure, which was rehabilitated during 1971–1980, was found to be in good shape.

However, in the vicinity of those bents rated below Cooper E-12, there were signs of structural damage to the stringers and the pile caps. In these instances, both needed to be replaced with new members. The substructure needed extensive rehabilitation to bring it up to a rating for a Cooper E-25 loading. This involved a majority of the bents. However, the absence of foundation data dictated caution in relying on the ratings obtained. Therefore, even after the trestle was rehabilitated, it was recommended by the consultant that the LIRR not use this trestle for loads greater than E-20 loading. The trestle was restricted to light electric trains and speeds not to exceed 5 mph.

Rehabilitation Scheme

The field investigation, test results, and design analysis indicated that the substructure required extensive rehabilitation. The rehabilitation scheme entailed driving new piles and replacing existing pile caps and stringers with new members. It was estimated that this scheme would cost $550,000 in 1984 dollars.

Project (management) Decision

Based on further management review, the decision was made to allocate funding from the LIRR 10-year, $2.0 billion Capital Improvement Program for a replacement bridge. The design was to be based on current AREA Cooper E-80 loading with prestressed concrete piles, prestressed concrete beams, precast deck, and direct fixation track. The engineer's construction cost estimate for a new concrete bridge was $11 million. However, the lowest responsive bid received was $14 million. After review and analysis of the bids received, it was concluded that the relatively high bids resulted from

- Reduced market competition as a result of the abundance of bridge projects in the metropolitan area,
- Unique design features of the bridge, and
- Tight project completion time and Coast Guard restrictions on channel opening and closing during certain timeframes.

It was decided that, with funding available, the project must proceed. The new bridge is under construction in 1988.

BRIDGE DATA BASE AND RATING PROGRAM

Background Information

One of the goals of the Civil Engineering Department is to automate various tasks that have been heretofore performed manually. The explosive growth of low-cost, high-powered microcomputers (*5, 6*) presented an opportunity and challenge to computerize bridge information that existed in various Engineering Department documents (Bridge and Building Record Book, valuation maps, engineering drawings, New York State Bridge Inspection Reports, etc.).

Bridge Data Base Program

In early 1986, the Civil Engineering Department obtained a number of IBM personal computers (PCs). Available IBM software, Data Ease, and dBASE III programs were used to formulate an in-house program for bridge data base information.

The salient features of the program include the following items (descriptors), shown in Figure 6, that provides various types of information:

1. Identification, which includes information on railroad branch, LIRR bridge identification number, New York State bridge identification number (if applicable and available), and feature crossed (highway, roadway, waterway).
2. Structural data, which include year built, date of original design drawings, and date of as-built drawings, depending on the information available.
3. Type of structure, which includes structural configuration (e.g., through plate girder, prestressed concrete, open deck/solid deck). In addition, number of spans, number of tracks, and length of spans between abutments are given.
4. Condition rating: The New York State standard Bridge Inspection and Condition Report is used to conduct in-depth inspection, photograph, document deficiencies, and record the condition rating of a structure on a scale from 0 (bridge condition beyond repair, danger of immediate collapse) to 9, which is new condition. Figure 7 is a typical inspection report form.
5. Load rating and capacity: Based on the AREA *Manual of Railway Engineering*, calculations are performed and various components are rated and listed in terms of railway Cooper E loading, with the weakest member governing the capacity of the bridge structure.
6. Structural or safety flag (if applicable).
7. Maintenance and repair history: If available, includes date and type of repairs performed and date of last painting.

Bridge Load Rating Program

A majority of LIRR bridges have through-plate girders, deck-plate girders, or I-beams. These three are used in 349 bridges of the total 396, which translates to 88 percent of all bridges in the system.

Most of the plate-girder bridges are built-up sections with riveted connections. In performing load rating analysis, one of the tedious, time-consuming, and costly tasks is calculation of the moment of inertia of a section. An in-house program was written in BASICA 2.0 and compiled using IBM BASIC Compiler Version 1.0. The program consists of two modules, Moiner.exe and Sectdraw.exe. Minimum hardware requirements are 640K RAM, two floppy drives, a graphics monitor,

LIRR BRIDGE NO.	COUNTY	STRU TYPE	BIN (NYS) (DOT)	NO. OF SPANS	LENGTH OF SPANS	LOCATION	CONDI. RATING	RATING DATE	RATED BY	LOAD RATI	CLEARANCE	PAINTED (T/F)	PAINT DATE	REPAIRS	REHABILITATION	FLAG CONDI	COMMENTS
BRANCH NAME : PORT JEFFERSON																	
65-0-257	NASSAU	TPG	7036780	3		BARCLAY ST.- HICKSVILLE	6	02/22/85	NYS/CONSUL			F	/ /				PART OF VIADUCT
65-0-259	NASSAU	TPG	70950	1		BETHPAGE RD- HICKSVILLE		/ /				F	/ /				PART OF VIADUCT
65-0-280	NASSAU	HTPG	7060840	1	56'	JERICHO TPKE.- SYOSSET	5	09/18/85	NYS/CONSUL			F	/ /				
65-0-310	NASSAU	IB		1	21'	WHITNEY LANE-COLD SPRING HARBR		/ /				F	/ /				I-BEAM CONCRETE ENCASED
65-0-313	SUFFOLK	TPG	70952	2		WOODBURY RD-COLD SPRING HARBOR		/ /				F	/ /				
65-0-323	SUFFOLK	TPG	70953	2		W.ROUGUES PATH-COLD SPRING HAR		/ /				F	/ /				
65-0-347	SUFFOLK	HTPG	7037000	1	71'	NEW YORK AVE - HUNTINGTON	6	08/01/86	NYS/CONSUL		12'	F	/ /				
66-0-384	SUFFOLK	IB	70954	1	28'	STONY HOLLOW RD- DIX HILLS		/ /				F	/ /				
66-0-416	SUFFOLK	DPG	70955	5	201'	CHEESE HOLLOW RD-E. NORTHPORT		/ /				F	/ /				
66-0-424	SUFFOLK	IB	7059030	2	105'	SUNKEN MEADOW PKWY-KINGS PARK	6	07/15/86	NYS/CONSUL			F	/ /				
66-0-463	SUFFOLK	DPG	7060810	12	420'	JERICHO TPKE- SMITHTOWN	6	06/16/86	NYS/CONSUL			F	/ /		Rebuilt In 1937		
66-0-470	SUFFOLK	HTPG	7060830	1	85'	MAIN ST.- SMITHTOWN	6	09/17/86	NYS/CONSUL			F	/ /				
66-0-490	SUFFOLK	TPG	01833	1		ST.JAMES RD(RT.25A)- ST. JAMES		/ /				F	/ /				
66-0-520	SUFFOLK	DPG	70956	5	181'	LONGHILL RD.- STONY BROOK		/ /				F	/ /				
66-0-537	SUFFOLK	TPG	70957	2	181'	NICHOLLS RD.-STONY BROOK		/ /				F	/ /				
66-0-541	SUFFOLK	IB	70958	1	27'	BENNETT RD.- STONY BROOK		/ /				F	/ /				
66-0-549	SUFFOLK	IB	70959	1	27'	DEPOT RD.- SETAUKET		/ /				F	/ /				
66-0-552	SUFFOLK	DPG	70960	5	171'	OLD TOWN RD.- SETAUKET		/ /				F	/ /				
66-0-565	SUFFOLK	CBOA	70961			DARK HOLLOW RD-PORT JEFFERSON		/ /				F	/ /				
66-B-466	SUFFOLK	IB	2261130	3	94'	EDGEWOOD AVE/BLYDENBURG RD.	5	07/09/86	NYS/CONSUL			F	/ /	REPAIR 3-7-71			
66-B-414	SUFFOLK	DPG	3364550	3	137'	PULASKI ROAD - NORTH PORT	4	07/09/86	NYS/CONSUL		17'	F	/ /			SAFTY CONCRETE PAVING	
66-B-568	SUFFOLK	TS	2261340	5	80'	SHEEP PASTURE RD - SETAUKET	4	07/10/86	NYS/CONSUL		21'	F	/ /				REMOVAL OF SAFTY FLAG

TOTAL NO. OF BRIDGES	HALF THRU PLATE GIRDER (HTPG)	DECK PLATE GIRDER (DPG)	THRU PLATE GIRDER (TPG)	I - BEAM (IB)	CONC. BEAM OR ARCH (CBOA)	TIMBER STRUC. (TS)	PRESTRESSED CONC. BEAM (PB)
22	3	5	6	6	1	1	0

PORT JEFFERSON Branch Report Is Complete ....

FIGURE 6 Bridge data base report.

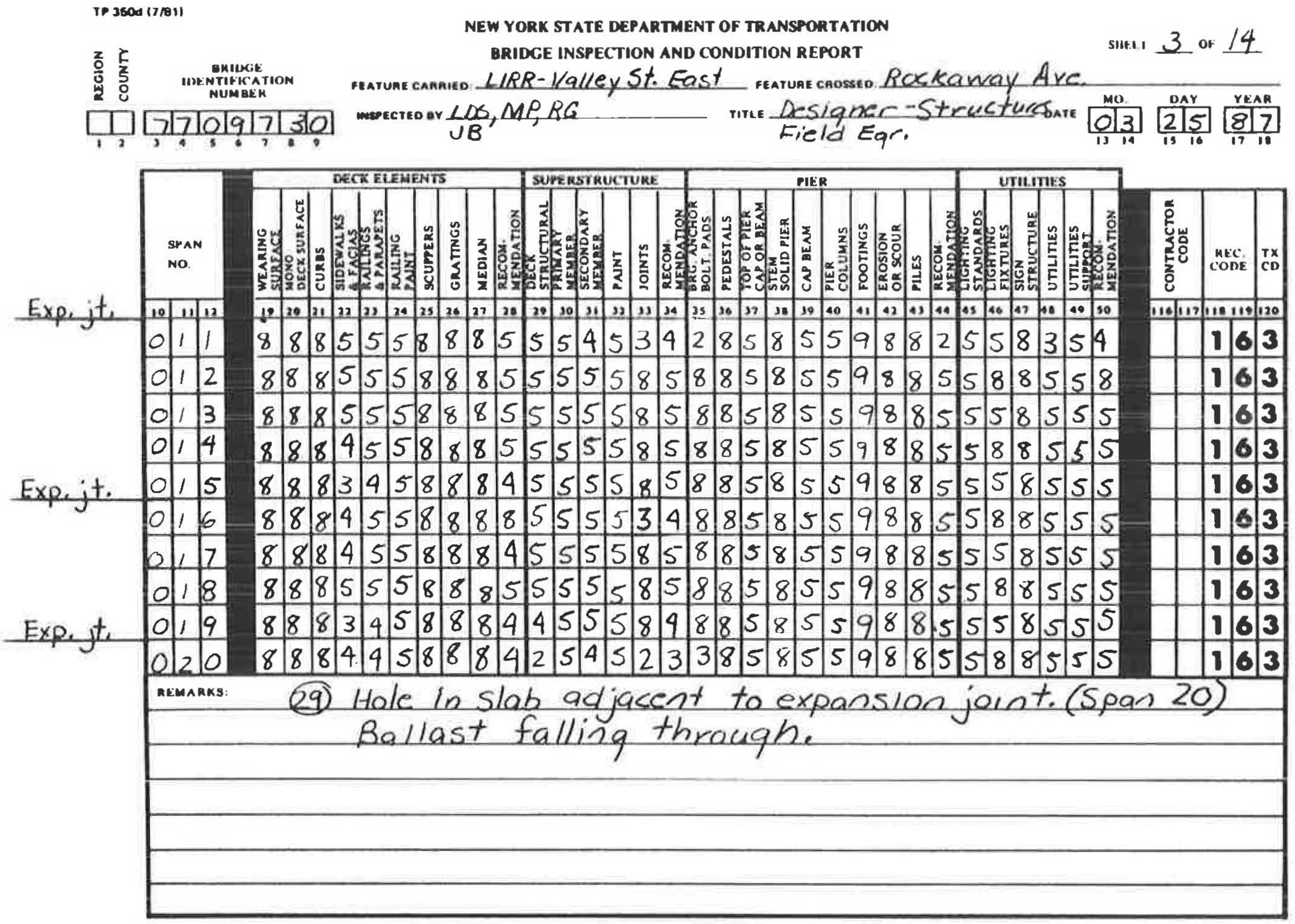

TP 360d (7/81)

NEW YORK STATE DEPARTMENT OF TRANSPORTATION
BRIDGE INSPECTION AND CONDITION REPORT

SHEET 3 OF 14

REGION ☐ COUNTY ☐ (1 2)
BRIDGE IDENTIFICATION NUMBER 7709730 (3–9)
FEATURE CARRIED: LIRR-Valley St. East
FEATURE CROSSED: Rockaway Ave.
INSPECTED BY: LDG, MP, RG, JB
TITLE: Designer-Structures Field Eqr.
DATE: MO. 03 (13 14) DAY 25 (15 16) YEAR 87 (17 18)

	SPAN NO.			DECK ELEMENTS										SUPERSTRUCTURE						PIER										UTILITIES						CONTRACTOR CODE		REC. CODE		TX CD
				WEARING SURFACE	MONO DECK SURFACE	CURBS	SIDEWALKS & FACIAS	RAILINGS & PARAPETS	RAILING PAINT	SCUPPERS	GRATINGS	MEDIAN	RECOMMENDATION	DECK STRUCTURAL	PRIMARY MEMBER	SECONDARY MEMBER	PAINT	JOINTS	RECOMMENDATION	BRG. ANCHOR BOLT. PADS	PEDESTALS	TOP OF PIER CAP OR BEAM	STEM SOLID PIER	CAP BEAM	PIER COLUMNS	FOOTINGS	EROSION OR SCOUR	PILES	RECOMMENDATION	LIGHTING STANDARDS	LIGHTING FIXTURES	SIGN STRUCTURE	UTILITIES	UTILITIES SUPPORT	RECOMMENDATION					
	10	11	12	19	20	21	22	23	24	25	26	27	28	29	30	31	32	33	34	35	36	37	38	39	40	41	42	43	44	45	46	47	48	49	50	116	117	118	119	120
Exp. jt.	0	1	1	8	8	8	5	5	5	8	8	8	5	5	5	4	5	3	4	2	8	5	8	5	5	9	8	8	2	5	5	8	3	5	4			1	6	3
	0	1	2	8	8	8	5	5	5	8	8	8	5	5	5	5	5	8	5	8	8	5	8	5	5	9	8	8	5	5	8	8	5	5	8			1	6	3
	0	1	3	8	8	8	5	5	5	8	8	8	5	5	5	5	5	8	5	8	8	5	8	5	5	9	8	8	5	5	5	8	5	5	5			1	6	3
	0	1	4	8	8	8	4	5	5	8	8	8	5	5	5	5	5	8	5	8	8	5	8	5	5	9	8	8	5	5	8	8	5	5	5			1	6	3
Exp. jt.	0	1	5	8	8	8	3	4	5	8	8	8	4	5	5	5	5	8	5	8	8	5	8	5	5	9	8	8	5	5	5	8	5	5	5			1	6	3
	0	1	6	8	8	8	4	5	5	8	8	8	8	5	5	5	5	3	4	8	8	5	8	5	5	9	8	8	5	5	8	8	5	5	5			1	6	3
	0	1	7	8	8	8	4	5	5	8	8	8	4	5	5	5	5	8	5	8	8	5	8	5	5	9	8	8	5	5	5	8	5	5	5			1	6	3
	0	1	8	8	8	8	5	5	5	8	8	8	5	5	5	5	5	8	5	8	8	5	8	5	5	9	8	8	5	5	8	8	5	5	5			1	6	3
Exp. jt.	0	1	9	8	8	8	3	4	5	8	8	8	4	4	5	5	5	8	9	8	8	5	8	5	5	9	8	8	5	5	5	8	5	5	5			1	6	3
	0	2	0	8	8	8	4	4	5	8	8	8	4	2	5	4	5	2	3	3	8	5	8	5	5	9	8	8	5	5	8	8	5	5	5			1	6	3

REMARKS: ㉙ Hole In slab adjacent to expansion joint. (Span 20) Ballast falling through.

FIGURE 7 Typical bridge inspection form.

an IBM PC–compatible computer, and a printer for hard copies.

Additional programs are being formulated to include computation of moments and shears for moving loads and further automation of stresses and final rating calculations. Figure 8 shows the LIRR bridge management process.

Data Base Benefits

Some of the benefits that can be derived from full implementation of the data base and load rating program include

- Reduced engineering man-hour costs and improved efficiency gained by automating various tasks previously conducted manually;
- Availability of instant information and thus capability to review lists of all deficient bridges on various branches and focus on bridges with inspection condition rating of 3 or less;
- Continuously update information (data base) from in-house inspection reports, consultants' inspection reports, or New York State inspection reports;
- Revise and periodically update bridge load rating and capacity when such calculations are formulated;
- Review lists of any structural or safety flags and take appropriate corrective action;
- Exchange with and provide to other agencies timely information when requested;
- Respond expeditiously to a freight shipment by analyzing the stress condition of the bridge or bridges on the branch using the freight load and axle spacing and comparing them with known capacity of the bridge structure or structures in the data base;
- Effective management tool to priority rank deficient bridges by conducting more frequent inspections; reducing train speeds (if necessary); restricting train loads (if required); and budgeting monies for bridge strengthening, rehabilitation, or replacement.

CONCLUSIONS

The LIRR bridge infrastructure of 396 railroad bridges presents a challenge in terms of priority ranking resources and managing the system so that the structures are safe, reliable, and maintain their load-carrying capacity. The $2.0 billion, 10-year (1982–1991) Capital Improvement Program has, for the first time, provided an opportunity to focus on existing deficient bridges, trestles, and viaducts that have either reached or are nearing their useful service lives. Various bridge structures on different corridors are in the design phase or have been inspected, studied, designed, and contracted for strengthening,

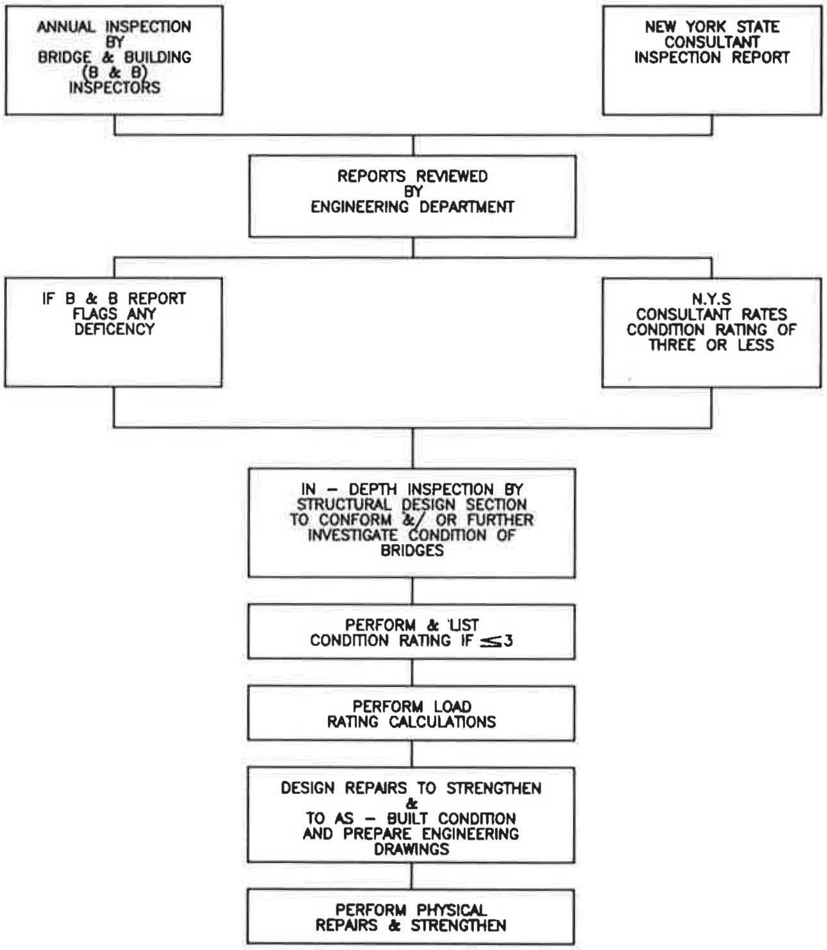

FIGURE 8 LIRR bridge management process.

rehabilitation, or replacement with the assistance of either outside consultants or in-house engineering personnel.

The bridge data base and rating program will provide an effective management tool to priority rank and manage deficient bridges.

REFERENCES

1. M. S. Longi. Innovations in Track Structures on Long Island Rail Road: Rationale, Design Criteria, and Performance. In *Transportation Research Record 939*, TRB, National Research Council, Washington, D.C., 1983, pp. 18–26.
2. Report of Inspection Repair and Painting of Manhasset Viaduct, Phases I, II, III. Sverdrup and Parcel, 1980, 1983, 1986.
3. *Manual For Railway Engineering*, 2 vols. American Railway Engineering Association, Chicago, Ill.
4. *Engineering Inspection and Rating of Reynolds Channel Timber Trestle*. Envirodyne/Kaiser Engineers; Long Island Rail Road, Nov. 1984.
5. G. Dallaire. The Microcomputer Explosion in CE Firms. *Civil Engineering*, Feb. 1982.
6. W. M. Butalla. Microcomputers: Do They Have a Place in Large Engineering Firms? *Civil Engineering*, June 1982.

Publication of this paper sponsored by Committee on Railroad Track Structure System Design.