Concrete Pavement Technology in Japan Today

SHIGERU IWAMA AND YUTAKA ANZAKI

In this paper, the current state of road pavement technology in Japan is described. The traffic and weather conditions that affect pavement design and the methods of pavement selection used are examined. Attention is drawn to the type and structure of portland cement concrete (PCC) used, as well as its performance and construction methods. Future trends in development of PCC pavement technology in Japan are also described.

Currently, most road pavements in Japan are made of asphalt. Concrete pavements were used first, however, and there is a rich accumulation of technological data. These many years of study have served as the basis for a recent compilation of standards for design and construction of concrete pavement in Japan, the *Manual for Cement/Concrete Pavement* (*1*), and are recognized as proof of the high level of concrete pavement technology in Japan. In addition, records of the construction of major roads, including national expressways, have been added to the data base of study results yearly. Although the compilation of these records is still small in volume, the contents indicate a positive attitude toward the development of new techniques through actual construction. This paper summarizes the background and present condition of the design and construction of concrete pavements in Japan. Problems that have yet to be solved and the directions of future studies and developments are also described.

DEVELOPMENT OF PAVEMENT USE IN JAPAN

History of Pavement Use

The types of pavement used in Japan, as well as changes in their use, are summarized in Figure 1 for three representative years (1965, 1975, and 1984).

Traffic Conditions, Weather Conditions, and Special Problems

Traffic Conditions

Roads in Japan are classified into six groups for pavement design, according to the amount of heavy vehicle traffic that is carried. Table 1 presents the current distribution of design classifications by type of road.

Weather Conditions

Weather conditions in Japan include high annual precipitation, extremely large seasonal and diurnal temperature differences, and large amounts of snow over about half the country. The annual rainfall is 60–440 cm (24–170 in., averaging 80 in.). The depth of snow accumulation in cold regions reaches a maximum of 3.8 m (13 ft) and averages 1.0 m (3 ft).

The annual temperature difference on pavement surfaces is 50–55°C (90–100°F) for concrete pavement and 60–65°C (110–120°F) for asphalt pavement. The daily temperature change of the surface during fine weather can range from 20°C to 22°C (36–40°F) for concrete pavement.

Special Considerations

The wear that accompanies the ongoing growth of traffic volume and the recent increase in the use of spiked tires is a serious problem, particularly in the cold, snowy areas. Another matter that needs special attention in Japan is the problem of roads that carry large traffic volumes near houses in many metropolitan areas. The construction, maintenance, and control of the pavement surface in these areas must include thorough consideration of the effect of noise and vibration on the roadside environment.

Role of Concrete Pavement

In direct contrast to the usual progression of road technology improvement, the use of concrete pavement in Japan has actually decreased. Many factors are involved in this unusual development. For example, asphalt pavement is attractive to road administrators because of its lower initial investment cost. Asphalt pavement can also be used to construct a wide range of structure types, from low cost to high cost. Each type of structure satisfies a particular set of road requirements, so the most economical structure for a given situation can be used.

Another factor in favor of asphalt involves closing roads to traffic, which is necessary for curing concrete. Because

S. Iwama, Japan Road Association, Shoyu-Kaikan Building, 3-3-1 Kasumigaseki, Chiyoda-ku, Tokyo 100, Japan. Y. Anzaki, Pavement Section, Public Works Research Institute, Ministry of Construction, 1 Asahi Tsukuba, Ibaraki-Ken, Japan.

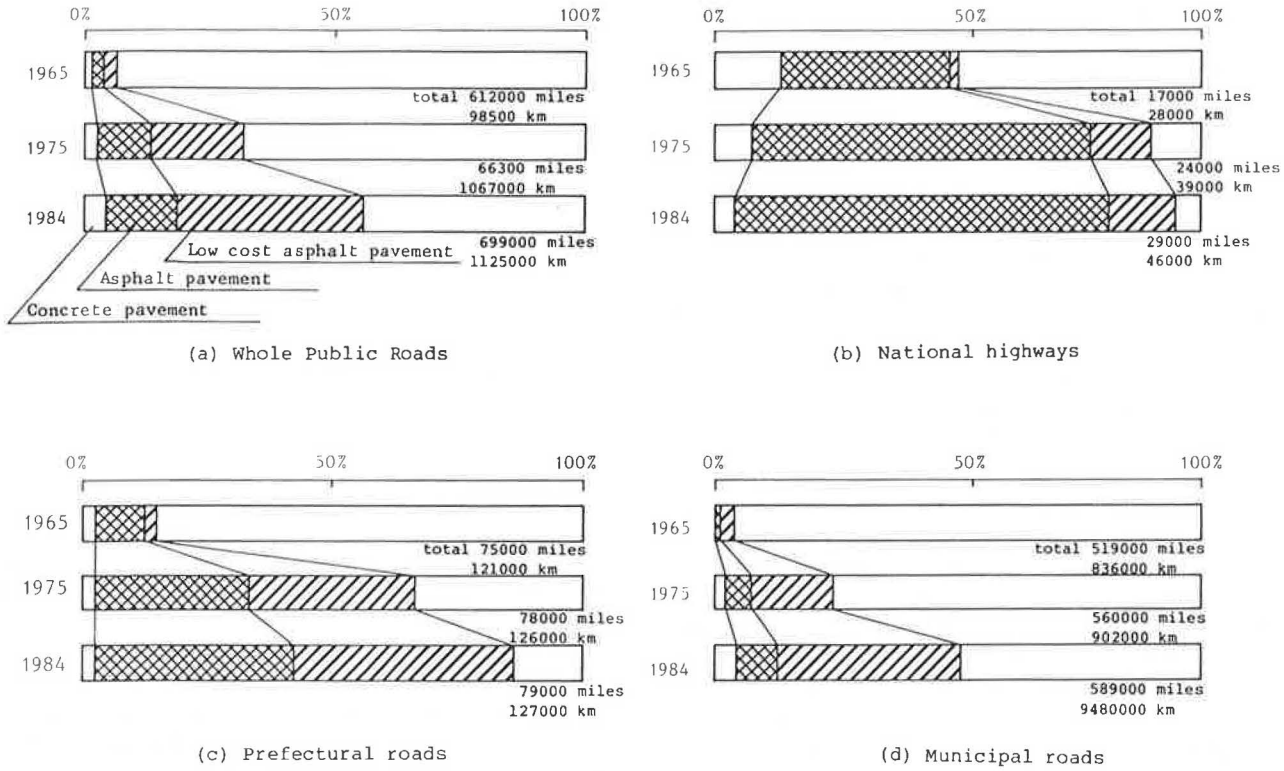

FIGURE 1 Types of pavements used in Japan and relative proportions of use, 1965–1984.

most of the pavements constructed during the past few decades were replacing existing gravel roads that were vital to local transportation, this was an important disadvantage of concrete. In urban areas, the repeated excavation work required for underground utilities was considered to be another disadvantage of concrete pavements.

The construction equipment for asphalt pavement, including plants and finishers, had been introduced at the beginning of Japan's road modernization process. Depreciation of the equipment was required first, allowing construction of asphalt pavements to precede other types.

Concrete pavement was considered to be inferior, albeit only slightly, in terms of ride, running performance, and the influence of noise and vibration on the roadside environment. In addition, repairs to damaged concrete pavement are technically more difficult than those to asphalt, even though the costs are similar.

It is apparent that the delay of concrete pavement use in Japan was the result of all these reasons combined. In addition, as the volume of concrete pavement work that was performed decreased, improvements to and documentation of construction techniques were also delayed, resulting in higher construction costs and additional disadvantages in application. Concrete pavement construction in Japan thus entered a vicious cycle.

Despite these problems, concrete pavement is expected to be increasingly important for Japanese roads. This is especially true for roads carrying heavy traffic, where rutting caused by flow of asphalt pavement is extreme; for roads in snowy, cold areas, where deterioration caused by spiked tires is severe; and for local roads that may have small traffic volumes but still require maintenance-free pavements. For all of these roads, asphalt pavement is not sufficient. In view of the new roles expected for concrete pavement in Japan, the

TABLE 1 DISTRIBUTION OF PUBLIC ROADS IN JAPAN BY TRAFFIC CLASSIFICATION, 1979

	Traffic Classification (% of total road length)				
Road Type	*L* (ADTT < 100)	*A* (ADTT 100–250)	*B* (ADTT 250–1,000)	*C* (ADTT 1,000–3,000)	*D* (ADTT 3,000+)
National (urban) expressways	0	3.6	39.0	32.4	25.0
Ordinary national highways	11.4	19.9	39.3	24.0	5.5
Prefectural roads	56.9	23.7	15.9	3.2	0.3
Subtotal	45.3	22.8	21.8	8.4	1.6
Major municipal (city, town, and village) roads	78.6	12.0	7.7	1.6	0.1
Total	49.5	21.4	20.1	7.6	1.4

technical problems and considerations involved in concrete pavement construction should be studied and solved as soon as possible. In addition, the appropriate methodology should be more widely distributed.

Selecting Pavement Type: Comparison of Life Cycle Cost

Comparison studies between asphalt and concrete pavements have been carried out for trunk roads and rural expressways. These comparison studies usually include consideration of the advantages and disadvantages for given ground and subgrade conditions, an average daily truck traffic (ADTT) estimate, regional weather conditions, the availability of material for the base course and of aggregate, and so on. The most essential part of this comparison is the life cycle cost.

The most typical case, the selection of portland cement concrete (PCC) pavement, occurs when the life cycle cost of concrete pavement is less than that of asphalt pavement, even though the initial construction cost of the concrete pavement is higher by a certain percentage. The difference in life cycle cost is sometimes as high as 30 percent because the design lifetime of asphaltic concrete pavement is only about 10 years. Concrete pavement is usually preferred in tunnels because significant reductions in the lighting cost are possible.

STRUCTURE AND PERFORMANCE OF CONCRETE PAVEMENTS

Types of Concrete Pavement

Long doweled slabs, reinforced with steel mesh, have been almost exclusively used for expressways, national highways, and prefectural roads (administratively equivalent to state roads in the United States). Continuously reinforced concrete and prestressed concrete pavements are being applied in certain exceptional cases, and the former now accounts for scores of kilometers of expressways, as well as national highways. For municipal roads, plain undoweled concrete slabs are widely used because of the reduced requirements of the lighter traffic and because of the increased ease of construction.

Concrete Slab Thickness

The concrete slabs used for road pavements in Japan are the thickest in the world (see Tables 2 and 3). They can be as much as 30 cm (12 in.) thick when the bending strength of the concrete is 45 kg/cm^2 (650 psi).

TABLE 2 THICKNESS OF CONCRETE SLAB

Road Classification[a]	Thickness of Concrete Slab
L Traffic	15 (20) cm [6 in. (8 in.)]
A Traffic	20 (25) cm [8 in. (10 in.)]
B Traffic	25 cm (10 in.)
C Traffic	28 cm (11 in.)
D Traffic	30 cm (12 in.)

NOTE: For roads other than expressways. Figures in parentheses for *L* and *A* traffic are for concrete bending strength of 40 kg/cm^2 (570 psi), instead of the commonly used strength of 45 kg/cm^2 (650 psi).

[a] See Table 1.

TABLE 3 THICKNESS OF DESIGNED CONCRETE PAVEMENT SLAB, EXPRESSWAYS

Designed Traffic Volume[a] (10^6 vehicles)	Thickness of Pavement Slab
Less than 13	25 cm (10 in.)
13–24	28 cm (11 in.)
24 or more	30 cm (12 in.)

[a] 20-year accumulated traffic volume of heavy vehicles.

Base Course Structure

In the case of national highways, a 10–50-cm (4–20-in.)–thick base course is provided in accordance with the magnitude of the California bearing ratio (CBR). An asphalt cushion course, ~4 cm (1.6 in.) thick, is often provided on top. For expressways, 15-cm (6-in.)–thick cement-treated granular material with an unconfined compressive strength of 20 kg/cm^2 (330 psi) has always been applied when the CBR of the 30-cm (12-in.)–thick subbase course or uppermost subgrade exceeds 10.

Performance of Concrete Pavement

Figure 2 shows the relationship between the accumulated volume of large-vehicle traffic, the thickness of the concrete pavement slab, and slab condition. The data were derived from an investigation carried out by the Public Works Research Institute, Ministry of Construction in 1981–1982.

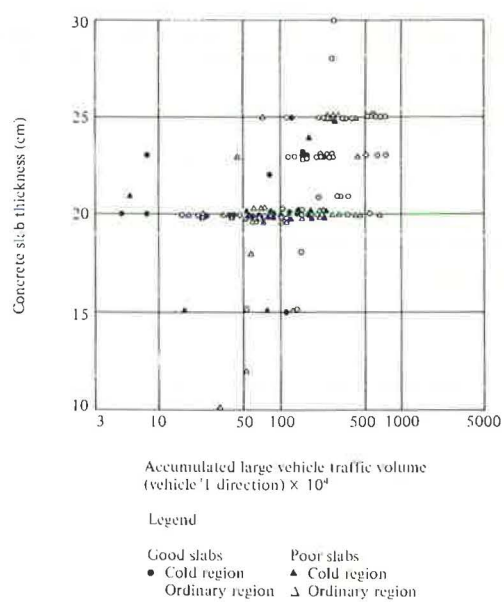

FIGURE 2 Relationship between accumulated large-vehicle traffic volume, concrete slab thickness, and slab condition.

TABLE 4 PAVEMENT DESIGN CATEGORIES, CORRESPONDING ACCUMULATED LARGE TRAFFIC VOLUME, AND SLAB THICKNESS

Category	ADTT	Accumulation of 20 years (thousands)	Standard Design Thickness of Slab
L	< 100	< 730	15 cm (6 in.)
A	100–250	730–1,820	20 cm (8 in.)
B	250–1,000	1,820–7,300	25 cm (10 in.)
C	1,000–3,000	7,300–22,000	28 cm (11 in.)
D	3,000+	22,000+	30 cm (12 in.)

Those sections with no cracks or few cracks are marked either with a solid circle (in cold regions) or an open circle (other regions). Those sections with many cracks, which had almost reached the end of their service life, are marked either with an open triangle (cold regions) or a solid triangle (other regions). It is clear that cracks generally appear earlier in cold regions.

The general relationships between pavement design categories (refer to Tables 1 and 2) and accumulated volumes of large traffic in 20 years are presented in Table 4. From the evidence presented by Figure 2 and Table 4, it can be concluded that a design life of 20 years is usually achieved.

CONSTRUCTION METHODS FOR CONCRETE PAVEMENT IN JAPAN

When viewed in terms of the scale of construction, Japan's recent PCC pavement works can be generally classified as follows:

- expressways, for which the unit work area is 10–15 km (6–10 mi) in length and 170,000–250,000 m^2 (180,000–260,000 yd^2) in area, and
- national highways and major local roads, for which the construct unit is 1–2 km (0.6–1.3 mi) in length and 7,500–35,000 m^2 (8,000–37,000 yd^2) in area.

The side form system is being used for both classes of construction. The slip form method was used once by the Kanto Regional Construction Bureau of the Ministry of Construction, using a slip form paver imported from the United States. The volume of works was four lanes, 60 km (38 mi) of paved roads in length, or 210,000 m^2 (250,000 yd^2) in area during 1969–1972, but no further construction was performed. The major reasons were the difficulty of achieving large increases in the production and transportation capacity for the concrete, as well as the presence of too many bridges, viaducts, and culverts.

Construction Methods Applied in National Highways and Major Local Roads

Base Course

The materials listed in Table 5 are generally used for the base course. The base course materials that are preferred are marked with double plus signs. The most mechanically stable material, crushed stone, is generally used for national highways, and soil cement is used for expressways.

TABLE 5 MATERIALS USED FOR BASE COURSE OF PCC PAVEMENTS

Material	Used as Subbase Course	Used as Single-Layer or Base Course
Granular Materials		
Pit run gravel, crusher run, sand, or slag	++	–[a]
Crushed stone for mechanical stabilization	–	++
Slag for mechanical stabilization	–	++
Hydraulic slag for mechanical stabilization	–	++
Stabilized Base Course Materials		
Cement stabilization	+	++
Lime stabilization	+	–[b]
Bituminous stabilization	–	+
Dense graded asphalt concrete	–	+[c]

NOTE: Double plus signs indicate frequently used materials. Single plus signs indicate materials used less frequently. The mixing system of crushed stone for mechanical stabilization, cement–stabilized base course material, lime soil–stabilized base course material, and bitumen–stabilized base course material includes the plant mixing system and road mixing system.

[a] Can be used when the modified CBR is 80 and over, and when the PI (plasticity index) of the material passing a 0.4 mm (No. 40) sieve is 4 or less.

[b] Can be used when the asphalt intermediate layer is provided as part of the base course.

[c] Asphalt intermediate layer.

Machine Formation and Paving Capability

The typical machine formations that are employed are shown in Figure 3. The selection of machine formations is based on factors such as the daily extension of pavement required, whether the concrete paving (spreading and compacting) is of the single-layer or double-layer type, whether the concrete can be supplied from outside the lanes to be paved, and the type and number of usable machines.

Paving Procedures

Mixing and Transportation Concrete is supplied by ready mix concrete plants. There are some 4,000 of these plants nationally. The mixed concrete is transported by dump trucks (rear dumps, not side dumps).

Form Setting and Form Removal Generally, steel forms are used, as described at the beginning of this section.

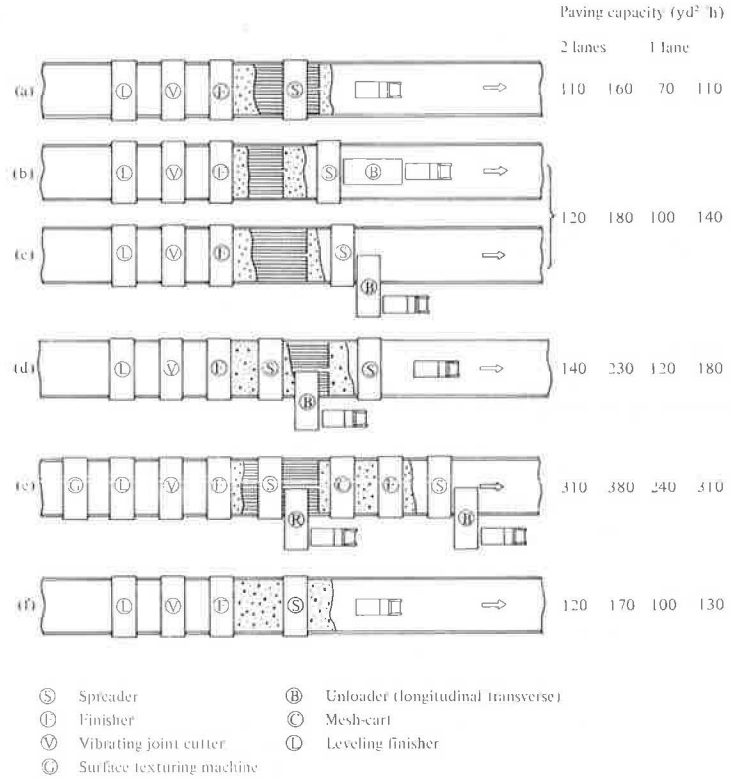

FIGURE 3 Typical paving machine combinations.

Spreading In principle, concrete spreading is performed separately for the lower layer and upper layer. The wire mesh is used as a boundary, with a spreader that may be of the blade type, box type, or screw type.

Installing Wire Mesh and Edge-Reinforcing Bar The wire mesh and reinforcement are loaded beforehand on mesh carts or at suitable intervals along the roadsides. They are placed manually on the spread lower concrete layer.

Compacting In principle, compacting is carried out for the whole layer of concrete, or in two layers. Compacting is usually performed with the surface vibration–type finisher, but sometimes an inner vibration–type machine is used along side forms.

Surface Finishing Surface finishing is performed with a finisher, followed by a float machine and then by a surface texturing instrument.

Joint Execution

For joint construction work, particular attention is paid to obtaining a structurally suitable and smooth finish. A method that involves placing a thin temporary insert into fresh concrete and then cutting the top 1.6 in. with a diamond cutter is usually used at the rate of one in three dummy joints. Simple joint cutting after the concrete has hardened is usually performed on the remaining two-thirds of the dummy joints on the next day of paving.

Curing

For curing, sunlight and a wind-protecting tent or the membrane curing method is used for the initial couple of hours. Sponge, hemp cloth, straw matting, or similar materials are then spread, and water is sprayed periodically. The curing period required to obtain a flexural strength of 500 psi is generally 2 weeks in the case of ordinary portland cement, 1 week for high–early strength portland cement, and 3 weeks for moderate heat portland cement and fly ash cement.

Construction Methods for Expressways

The first concrete pavement work for an expressway in Japan was performed in three work areas between Yaita and Shirakawa (a distance of ~48 km) on the Tohoku Expressway during October 1973–October 1974. The machine formation used for this work is shown in Figure 4. It is a set form system formation with an 8.5-m (28-ft) slab width.

This work sets the standards for large-scale mechanical work in Japan. The large-scale concrete pavement projects for expressways constructed after this work, up to the current time, are presented in Table 6.

For an expressway, a special type of cement is commonly used. Its specifications are given in Table 7. One of the special features of PCC pavement construction on expressways is the use of tine grooving to obtain a higher skid resistance immediately after the road is opened to traffic. Another is the use of mix design at 91 days. This procedure also provides better skid resistance, in this case through the intentional difference between the strengths of the mortar and the aggregate.

Construction of Special Types of Pavement

Special Pavement Structures

Continuously Reinforced Concrete Pavement The reinforcement in this type of concrete pavement consists of a steel content of 0.6 percent in the longitudinal direction. The pavement has D16 bars placed at 60-cm (24-in.) spacing in the transverse direction. The reinforcement may be installed by either of two methods. In the first procedure, the reinforcement is assembled on the ground and then set in the embedment position by using chairs. In the second, reinforced wire meshes weighing ~150 kg (330 lbs) each are installed. Bars are then arranged in a staggered pattern so that the lapped portions are transversely diagonal. Construction joints are prepared with stop forms, using timber blocks that are placed to clamp the longitudinal bars. In this case, the longitudinal reinforcement is enhanced by applying reinforcement bars of the same diameter, 100 cm (40 in.) long, to every third bar.

Prestressed Concrete Pavement This method is the same as the ordinary method, except for the installation of steel members for prestressing [~20 kg/cm^2 (300 psi) by effective prestress] and the prestress introduction work. The method of introducing the prestress was formerly either the pretension system or the posttension system, but currently the posttension system is applied in most cases.

The steel members that are inserted into the sheath are arranged by chair in a mesh form, both transversely and longitudinally, so that they are installed at middepth of the slab [usually 15 cm (6 in.) thick]. High-quality concrete, except for a slump of 5 cm (2 in.) or so, is conveyed by agitator trucks and spread and compacted in a single layer. Roller finishers are used in many cases because of the significantly higher consistency and the thinner slab. The quantity of standard daily work by mechanical construction is some 130 m^2 (160 yd^2).

To introduce the prestress, preliminary tension is generally applied by using special jacks, 3 to 7 days after paving. Final effective prestress is then obtained at 14 to 28 days.

In all, 33 projects during the past 10 years have used this method. The work amounts to ~100,000 m^2 (120,000 yd^2), including projects other than roads.

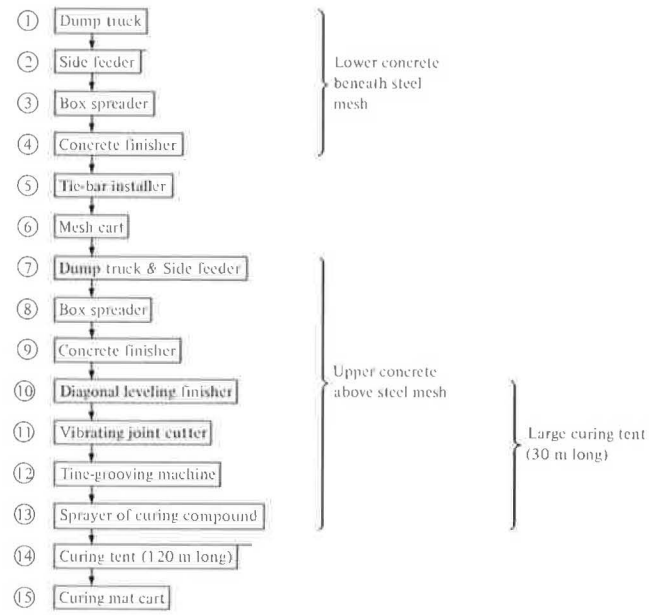

FIGURE 4 Paving machine formation for expressway construction.

Pavements in Special Sites

Tunnels The execution method for tunnels is nearly the same as that applied to ordinary projects. The exceptions are that the form is not installed on the base course but uses the drainage structure on the shoulder in many cases and that because of the tight clearance in the tunnel, the concrete is conveyed by agitator trucks.

Approach Zones for Other Structures The execution method is the same as for ordinary pavement, except that double reinforcement is arranged beforehand and the concrete is spread and compacted in a single layer. A distinctive feature of work performed in Japan is that slabs of this type are included in the pavement work for each contract.

Pavements Constructed of Special Materials

Plasticized Concrete This material is used for concrete pavement repair work on existing roads when an early return to traffic flow is required. The material used for pavement is continuously reinforced concrete. An 8-cm (3-in.) slump is set as the target value for consistency at the job site, and a superplasticizer, as 2 percent of the volume of the cement used, is added at the plant. In addition, if slump adjustment is required during placement because of the loss of slump during conveyance, the superplasticizer is added to the agitator truck and agitated at the job site. Continuously reinforced concrete pavement with plasticized concrete was used for a total of 65,000 m^2 (78,000 yd^2) of roadway during a period of 3 years.

TABLE 6 CONCRETE PAVEMENT WORK ON EXPRESSWAYS IN JAPAN

Expressway	Tohoku Expressway	Chuo Expressway	Sanyo Expressway	Trans-Kyushu Expressway	Tokai-Hokuriku Expressway	Joban Expressway
Work area	Yaita, Tochigi pref. - Shirakwa, Fukushima pref.	Nirasaki, Yamanashi pref. - Fujimi, Nagano pref.	Ako, Hyogo pref. - Bizen, Okayama pref.	Sagayamato, Saga pref. - Nakahara, Saga pref.	Gifu, Gifu Pref. - Mino, Gifu pref.	Sekimoto, Ibaraki pref. - Taira, Fukushima pref.
Work period	1973. 7 - 1974. 12	1975. 11 - 1977. 5	1981. 3 - 1982. 6	1983. 10 - 1985. 2	1984. 11 - 1986. 3	1986. 12 - 1988. 4
Extension of work (km)	48.1 30 miles	35.2 22 miles	9.5 6 miles	16.3 10 miles	19.2 12 miles	26.5 17 miles
Extension of concrete pavement (km)	46.7 29 miles	34.0 21 miles	9.5 6 miles	14.2 9 miles	11.3 7 miles	23.8 15 miles
Pavement width (m)	8.5 x 2 28.5' x 2	8.0 x 2 26.5' x 2	8.0 x 2 26.5' x 2	8.5 x 2 28.5' x 2	8.0 x 2 26.5' x 2	8.5 x 2 28.5' x 2
Slab thickness (cm)	30 12"	30 12"	30 12"	28, 30 11", 12"	25 10"	25, 28 10", 11"
Flexural strength in pavement design (kg/cm^2)	45 (51.8) 640 psi (740)	45 (51.8) 640 psi (740)	45 (50) 640 psi (714)	45 (50) 640 psi (714)	45 (50) 640 psi (714)	45 (50) 640 psi (714)
Age (day)	28	28	91	91	91	91
Unit cement content (km/m^3)	340 573 lbs/ yd^3	350 590 lbs/ yd^3	280 472 lbs/ yd^3	280 472 lbs/ yd^3	270 455 lbs/ yd^3	280 472 lbs/ yd^3

Note) A special type of cement is used for expressways. Its specifications are shown in Table 7.

TABLE 7 SPECIAL SPECIFICATION OF PORTLAND CEMENT FOR EXPRESSWAY PAVEMENT

		Japan Industrial Standards	
	Specification Pavement	Moderate-Heat Type	Normal Portland Cement
Fineness by Blaine	3,000 ± 100 cm^2/g (480 $in.^2/g$)	2,500+ cm^2/g[a] (400 $in.^2/g$)	2,500+ cm^2/g[a] (400 $in.^2/g$)
Flexural strength at 28 days	65+ kg/cm^2 (900 psi)	30+ kg/cm^2 (410 psi)	40+ kg/cm^2 (550 psi)
Hydration heat, 7 days	65− cal/g	70− cal/g	None
Sulfuric anhydride	2–3 percent	3− percent	3− percent
Tricalcium silicate	40–50 percent	50− percent	None
Tricalcium aluminate	5− percent	8− percent	None

[a] Actually, 3,200–3,300 cm^2/g.

Steel Fiber–Reinforced Concrete Concrete with ~ 100 kg of steel fiber added per 1 m^3 (290 lbs/yd^3) of concrete is often used. This material is frequently applied during maintenance and rehabilitation projects, such as concrete overlays in thin layers (5–10 cm, or 2–4 in.).

Concrete with slumps of 2.5 cm (1 in.) and 8 cm (3 in.) or so are available, with the former being conveyed by dump truck and the latter by agitator truck. For cases in which the work volume is small and an extra high early strength cement is used, steel fiber–reinforced concrete is mixed with other concrete in agitator trucks or by other methods at job sites. Sometimes special pavers that spread, compact, and finish concrete in one sweep or asphalt finisher–type spreaders are used, but otherwise the execution method is nearly identical to the ordinary method. Some 30 projects have been reported during the past decade, amounting to ~50,000 m^2 (60,000 yd^2). This count includes the rigid reinforcement of the floor slabs of steel bridges.

Porous Concrete Porous (permeable) concrete pavement is used for the low-traffic pavement of residential roads, squares, pedestrian areas, and parking lots. Porous concrete pavement has air voids of 25 percent, a coefficient permeability of $\sim 10^{-1}$ cm/s (0.04 in./s), and a bending strength at 28 days of 25 kg/cm^2 (350 psi) and up. General mix proportion (in weight) consists of 60 percent coarse aggregate, 20 percent fine aggregate, 14 percent cement, and 6 percent water (including rubber latex, 6 percent water).

Manufacturing is done at ordinary concrete plants, and the material is conveyed in dump trucks. In the case of mechanical paving, asphalt finishers or special pavers (improvements of the former) are used for spreading and compaction. The other parts of the work, namely the curing, joint cutting, filling of joint sealing material, and so on, are nearly identical to those of the ordinary method. The slab thickness is 8–15 cm (4–6 in.), depending on the application site.

A major example of construction by this method is the pedestrian pavilion square at the Tsukuba International Scientific Exhibition grounds.

Other Materials Pavements made by using precast slabs can be found in harbor and airport facilities. Records for the past decade include some 45 projects with this method, amounting to ~ 110,000 m^2 (130,000 yd^2). Precast prestressed slabs are hoisted by large, special cranes and installed. The distinctive feature of this method is that after the height is set, continuous support is provided by filling the voids between the slab bottom and the base course with grout. There is also a method of slab joint connection in which steel bars are inserted into the hollow tubes that were embedded beforehand into the slabs and then moved by compressed air. Grout is then filled in to fix the bars, as shown in Figure 5. Use of this method for the replacement or repair of concrete pavement has been increasing recently because it minimizes the period of closure to traffic.

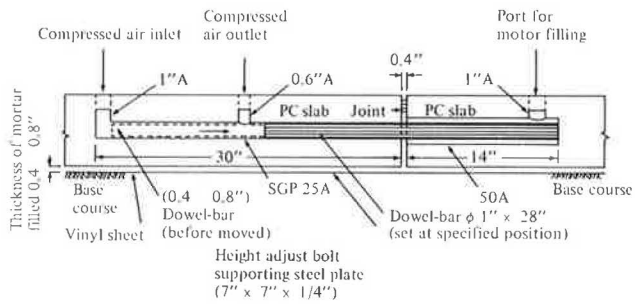

FIGURE 5 Precast concrete slab joint.

TRENDS IN THE DEVELOPMENT OF CONCRETE PAVEMENT TECHNOLOGY

Although concrete pavements have the disadvantages of high initial cost, difficult maintenance and repair procedures, and high noise and vibration in comparison with asphalt pavement, they also have the benefits of higher durability, less rutting, and better visibility, among others. It is therefore reasonable to expect that concrete pavement will be used more frequently in projects for which these characteristics are important. A few examples of current Japanese research and development into the extended application of concrete pavement, with these points in mind, are the following.

Roller-Compacted Concrete

This method allows concrete pavement to be placed by machines used for asphalt pavement. There is also a remarkable reduction of the curing period, which has thus far been a major disadvantage of concrete pavement. In Japan, roller-compacted concrete methodology is now at the basic study stage. Ongoing work includes mix design and structural design.

More Efficient Maintenance and Repair Methods

Even though concrete pavement offers far better durability than does asphalt pavement, its use has not prevailed because of the difficulty and cost of repair. To develop more efficient and economical maintenance and repair methods for concrete pavement, researchers in Japan are examining thin concrete overlays, faster execution methods using precast concrete, and concrete block pavements.

Small-Scale Concrete Pavement Construction

In the past, concrete pavements constructed in Japan were of the high-quality construction designed for use in trunk roads. More recently, the use of concrete pavement for small-scale projects has been growing through the construction of

local municipal roads by this method. Local engineers have discovered that the material can be worked easily on this scale without any special machines and that the materials are readily available, even though these points have not been the focus of many technical studies. For these local roads, concrete pavement can be considered essentially maintenance free. Studies with these small-scale concrete pavement projects as the main focus are being conducted so that technical standards can be compiled for the execution of such work.

REFERENCE

1. *Manual for Cement/Concrete Pavement.* Japan Road Association, Tokyo, 1984.