PIPECAR and BOXCAR Microcomputer Programs for the Design of Reinforced Concrete Pipe and Box Sections

TIMOTHY J. MCGRATH, DAVID B. TIGUE, AND FRANK J. HEGER

PIPECAR and BOXCAR are structural analysis and design programs for reinforced concrete pipe and box sections that were developed for the Federal Highway Administration in the early 1980s. The programs applied state-of-the-art methods of design but were written for mainframe computers, making them relatively inaccessible to many designers. Reported herein is a description of updated versions of the programs that operate on IBM or IBM-compatible personal computers that have user-friendly input routines with help screens that make access to and operation of the programs very simple, even for a computer novice. Program input is developed from a permanent file of typical or "default" design parameters; thus for a relatively simple design, the user can specify as little information as the diameter (span and rise for a box section) and the depth of fill. The default file can be modified to tailor the program to the particular default configuration needed by any user. For applications with unusual load or installation conditions, the user can modify almost all parameters to produce a suitable design. Structural design is in accordance with current American Association of State Highway and Transportation Officials standards. Reinforcing requirements are output in square inches per foot. If stirrups are required, an additional design routine is automatically invoked to allow the user to determine the size and spacing. Output files are written to computer floppy or hard disks, from which they may be viewed with standard text editor software or printed. Program output level is user controlled. At the maximum levels, the program output is sufficiently detailed to allow independent design review.

In June 1983, the Federal Highway Administration (FHWA) published the *Structural Design Manual for Improved Inlets and Culverts* (*1*). Originally conceived as a specialized project to develop a design rationale for the special geometries of improved inlets, the project resulted in the development of the computer programs PIPECAR and BOXCAR that are applicable to the structural design of circular and horizontal elliptical reinforced concrete pipe and single-cell box sections. The programs incorporate a new state-of-the-art method of design developed by Heger and McGrath (*2*). This design method was later adopted by the American Association of State Highway and Transportation Officials (AASHTO) and is given in Section 17.4 of the AASHTO Specifications for Highway Bridges (*3*). The programs were written for a mainframe computer and, because of their original emphasis on inlet structures, did not include design for wheel loads.

Simpson Gumpertz & Heger Inc., Consulting Engineers, 297 Broadway, Arlington, Mass. 02174.

Reported herein are the capabilities of upgraded versions of the programs that now operate on IBM, or IBM-compatible, personal computers, have user-friendly input-output routines, and include a number of live load options.

GENERAL PROGRAM CAPABILITIES AND LIMITATIONS

Application

PIPECAR and BOXCAR are computer programs that may be used for the structural design and analysis of reinforced concrete pipe and rectangular box sections, respectively. These programs determine the required steel reinforcement for user-specified culvert geometry, material properties, and loading data. PIPECAR is capable of designing any circular or horizontal elliptical pipe-culvert. Pipe-culverts may be designed by the direct method of completing a structural analysis and design for an assumed earth pressure distribution or by the indirect method of design reinforcing for three-edge bearing load conditions (i.e., a specified D-load). BOXCAR is capable of designing any rectangular single cell box culvert with or without haunches. Haunches, it specified, may have any geometry (i.e., the haunch angle may be other than 45 degrees), and haunches at the top may have a different geometry from haunches at the bottom. Steel reinforcing areas are calculated using the design method presented in AASHTO Section 17.4 (*3*). Both programs are capable of analysis and design for truck and railroad live loads in accordance with AASHTO and AREA specifications, respectively. Parameters that may be specified by the user are listed in Table 1.

As an alternative to specifying all the parameters listed in Table 1, the user may rely on a file of preprogrammed "default" parameters. By use of these default parameters, the user need specify only the culvert geometry and depth of fill (or, alternatively for the indirect design method of pipe, the D-load). The default values will be used for any additional parameters not specified by the user. The default file may be reconfigured by the user to meet any particular application such as cast-in-place or precast box sections.

Limitations

PIPECAR and BOXCAR do not optimize designs. That is, they do not process the quantities of reinforcing and concrete

TABLE 1 USER-SPECIFIED INPUT PARAMETERS

CATEGORY	PIPECAR	BOXCAR
Culvert Geometry	Circular or Horizontal Elliptical Inside Radii Wall Thickness	Single Cell Inside Span and Rise Top, Bottom and Sidewall Thicknesses Top and Bottom Vertical and Horizontal Haunch Dimensions
Loading Data	Depth of Fill, Density of Fill, Minimum and Maximum Lateral Soil Pressure Ratios, Truck or Railroad Loading, Depth of Fluid, Density of Internal Fluid, Surcharge Loads Uniform or Radial Loading Application (See Fig. 2) Alternatively a D-Load May Be Specified for Pipe	
Material Properties	Type of Reinforcing (Used for Crack Control), Reinforcing Yield Strength, Concrete Compressive Strength, Concrete Density	
Design Data	Live and Dead Load Factors, Strength Reduction Factors for Shear and Flexure, Cover over Reinforcing, Spacing, Size, and Number of Layers of Reinforcing	

and complete successive designs to determine geometries with minimum cost of materials. This can be completed through the use of multiple runs. Other program limitations include the following:

- BOXCAR does not consider the load case of internal pressure,
- The culvert size is limited to spans of 14 ft for box sections and diameters of 12 ft for pipe, and
- Only main flexural reinforcement requirements are fully determined for box and pipe sections.

STRUCTURAL CRITERIA FOR ANALYSIS AND DESIGN

Loadings

PIPECAR and BOXCAR analyze several different load conditions that are typically imposed on culverts. These include loads resulting from culvert self-weight; vertical and lateral soil pressures; internal fluid; and AASHTO truck, railroad locomotives, approaching vehicles (for box culverts only), and vertical and horizontal surcharge pressures. The load conditions are grouped into three categories: permanent dead loads, additional dead loads, and live loads. Permanent dead loads are considered to be always acting on the culvert. These include the culvert self-weight, vertical soil pressure, and a minimum lateral soil pressure that is specified by the user. Additional dead loads are loads that are considered only if they produce higher critical design forces for each of the design sections. These include the additional lateral soil pressure specified by the user and internal fluid load. Live loads include AASHTO HS-20 and Interstate truck wheel loading, railroad loading, or a user-specified live load. BOXCAR analyzes wheel loads at several positions across the top of the box culvert to simulate a truck traversing the culvert. As many as 11 different truck positions are considered to obtain the maximum critical design forces for each design section. Surcharge loads may be considered as either permanent dead load, additional dead load, or live load.

In BOXCAR, loads are applied as linear pressures, as shown in Figure 1. Foundation reactions are assumed to vary linearly across the bottom slab of the box culvert, and it is assumed that the supporting foundation cannot resist tensile forces, as is typically assumed in foundation design. In PIPECAR, loads and reactions can either be applied as a sinusoidally distributed normal pressure or as a linear pressure on the pipe at the option of the user. These two methods, commonly referred to as Olander and Paris pressure distributions, respectively, are shown in Figure 2.

PIPECAR includes the option of designing pipe by the indirect design method. The user may specify a desired D-load capacity for the pipe and the program will complete the analysis and design for the moments, thrusts, and shears of the specialized load condition.

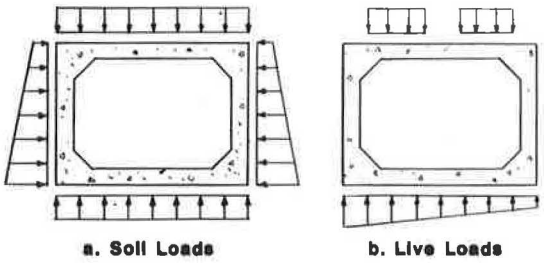

FIGURE 1 Typical pressure distributions used in BOXCAR.

Structural Analysis

PIPECAR and BOXCAR calculate the moments, thrusts, and shears at various design locations using the stiffness method of analysis. BOXCAR models the culvert as a four-member frame having a 1-ft width. For a given frame, member stiffness matrices are assembled into a global stiffness matrix, a joint load matrix is assembled, and conventional methods of matrix analysis are employed. The effect of haunches on the member stiffness is considered by performing a numerical integration across the member. The trapezoidal rule with 50 integration points is used, obtaining a sufficiently high degree of accuracy.

Because PIPECAR considers only symmetrical geometry and loads, the program models only half a pipe. The computer model consists of 36 members with boundary supports at the crown and invert. Each member spans 5 degrees, and nodes are located at the middepths of the pipe wall. For each member, a stiffness matrix is formed and translated into a global coordinate system. Pressures caused by the various loads are converted into normal and tangential nodal loads, which are then assembled into a joint load matrix. A solution is obtained by a recursion algorithm from which member end forces are obtained at each joint.

Design of Reinforcing

PIPECAR and BOXCAR calculate steel reinforcing areas based on the method described in Section 17.4 of the AASHTO specifications (*3*).

BOXCAR calculates steel areas using the maximum governing moments determined at Design Locations 1 through 11, shown in Figure 3. Flexural reinforcing requirements are evaluated at midspan for positive moments and at the tips of haunches and the face of walls for negative moments. The

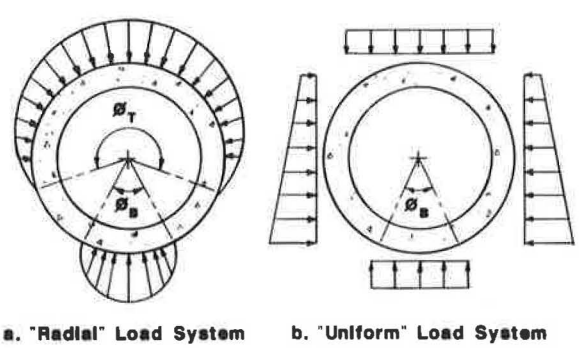

FIGURE 2 Typical pressure distributions used in PIPECAR.

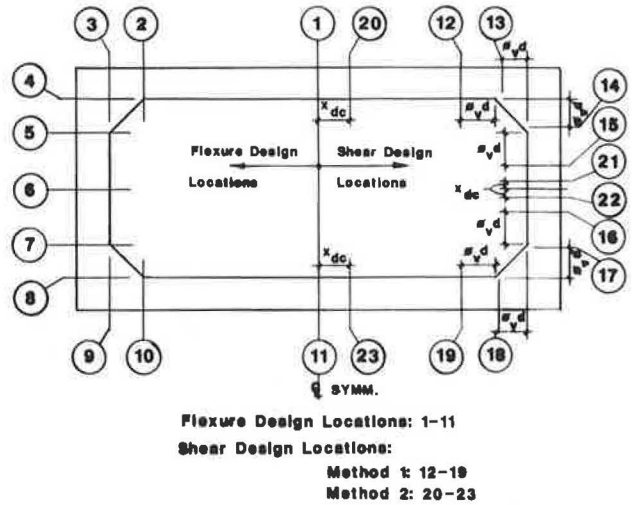

FIGURE 3 Locations of critical sections for shear and flexure design in single-cell box sections.

reinforcing layout consists of six steel areas designated A_{s1}, A_{s2}, A_{s3}, A_{s4}, A_{s7}, and A_{s8}, as shown in Figure 4. The area A_{s1} is the maximum steel area required to resist negative moments at Sections 2 through 10. Areas A_{s2}, A_{s3}, and A_{s4} are provided to resist positive moments at Sections 1, 11, 6; and A_{s7} and A_{s8} are designed to resist negative moments at Sections 1 and 11, respectively. Using the output option (see next section), the reinforcing requirements at all locations may be printed. This allows the designer to use alternate reinforcing layouts. The AASHTO requirement of limiting service load stresses for fatigue is also considered.

Shear stresses are evaluated at Design Locations 12 through 19, which are located at a distance $\phi_v d$ from the face of the haunch or wall and are computed with an allowable shear stress of 3 $\sqrt{f'_c}$ for boxes with uniform loadings and more than 2 ft of cover. For boxes with less than 2 ft of cover, or for boxes with significant live loads or railroad loads, the allowable shear stress is taken as $2\sqrt{f'_c}$. Shear stresses are evaluated at Design Locations 20 to 23, inclusive, where the value of M/vd equals 3, as required by AASHTO Section 17.4. When shear stresses exceed allowable values, the programs invoke a subroutine to design stirrup reinforcement.

PIPECAR calculates steel areas at three locations; inside crown, inside invert, and outside springline, as shown in Figure 5. These areas are designated as A_{sc}, A_{si}, and A_{so}, respectively. If shear stresses are exceeded at these locations, the program invokes a subroutine to design stirrup reinforcement.

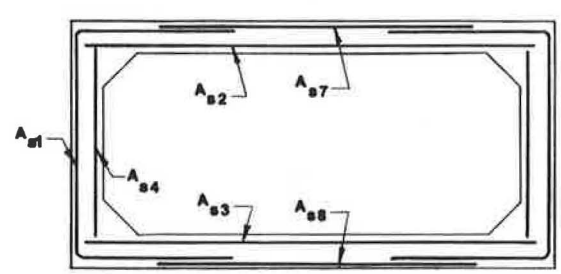

FIGURE 4 Typical reinforcing layout for single-cell box culverts.

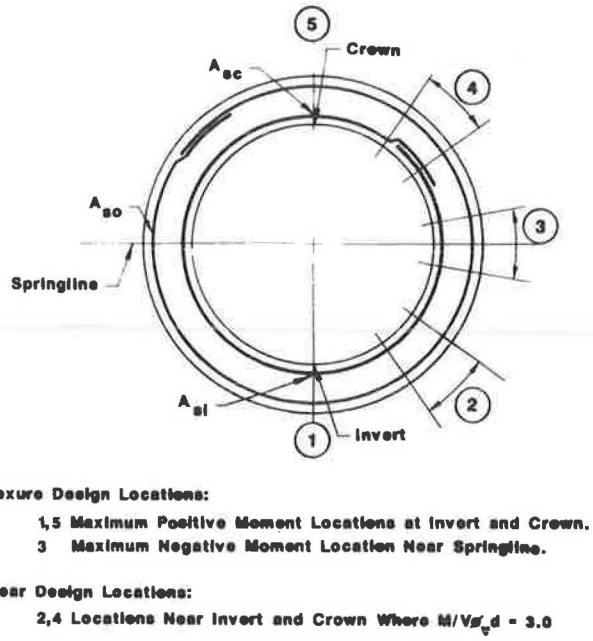

FIGURE 5 Typical reinforcing layout and design locations of critical sections for shear and flexure design in pipe sections.

COMPUTER PROGRAM

PIPECAR and BOXCAR run on IBM or IBM-compatible personal computers. Both programs are designed to be user friendly. The programs prompt the user for the various input data through menus. Help screens are available to aid the user in identification of input parameters and their applications. Much of the input is optional in that the program will assume standard default values for those not specified by the user. For BOXCAR, only the span, rise, and depth of fill are required input parameters. PIPECAR requires the user to input the pipe diameter and wall thickness for circular pipe, or the elliptical radii and wall thickness for horizontal elliptical pipe, the depth of fill, and the load system. The user may change the default parameters to gear the program to his or her particular design needs, such as cast-in-place or precast culverts. The programs save the input data for each design on a floppy or hard disk so that they may be retrieved later, and if desired, modified for additional runs.

The amount of output that can be obtained from the programs may be controlled by the user. The minimum amount of output that will be printed is an echo print of the input, any design warnings, and a design summary sheet. Additional available output includes stiffness matrices, displacements, moments, thrust, and shears at each node or design section for each load condition, and a table of design forces. Output files are written to a disk where they may be viewed with standard text editor software, or they may be printed for projects.

The main program routines for PIPECAR and BOXCAR are written in the FORTRAN computer language. User-friendly input and output routines are written in the BASIC language. All programs are compiled, therefore, the user is only required to have operating system software equivalent to PC DOS Version 2.0 or higher to execute the programs. Other hardware and software requirements include

- IBM PC, XT, AT, or a similar IBM-compatible computer and printer. Program output is formatted for 8 ½ × 11-in. paper.
- An 8087 or 80287 math coprocessor.
- A minimum of 640K bytes of memory.
- Two double density disk drives or a single double density disk drive and a hard disk drive.

The programs will be maintained and distributed by McTrans, the Center for Microcomputers in Transportation. Any interested person may obtain copies of the programs at a nominal cost by writing to McTrans, University of Florida, 512 Weil Hall, Gainesville, Florida 32611.

SAMPLE PROBLEMS

BOXCAR

This example problem demonstrates the use of the BOXCAR program for the design of the box culvert shown in Figure 6. For this problem, only the span, rise, and depth of fill were specified. The remaining parameters, listed in the echo print of the input as shown in Table 2, were assumed by the program. The design summary sheet for this example is shown in Table 3. The echo print of the input and the design summary sheet are the minimum amount of output obtained from the programs. More detailed output may be obtained at the option of the user as previously discussed.

PIPECAR

This example problem demonstrates the use of PIPECAR for the pipe shown in Figure 7. The pipe diameter, wall thickness, and depth of fill were specified for this problem. The echo print of the input is similar to that shown for the BOXCAR example problem. The design summary sheet obtained for this example is shown in Table 4.

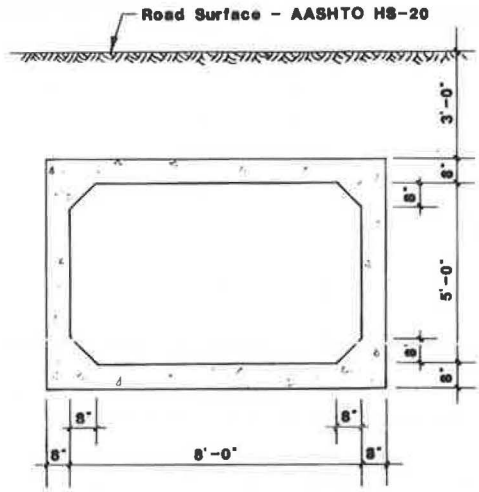

FIGURE 6 Culvert geometry for BOXCAR sample problem.

TABLE 2 ECHO PRINT OF INPUT DATA FOR BOXCAR SAMPLE PROBLEM

Filename	SAMPLE.BOX	
Job Description	Example of Boxcar Execution	
Span	8 ft	
Rise	5 ft	
Depth of Fill to Culvert Top	3 ft	
BOX GEOMETRY		
Top Slab Thickness	8 in.	
Bottom Slab Thickness	8 in.	
Sidewall Thickness	8 in.	
HAUNCH DIMENSIONS	Horizontal	Vertical
Top Haunches	8 in.	8 in.
Bottom Haunches	8 in.	8 in.
CONCRETE COVERS		
Top Slab Outside Face	1.5 in.	
Bottom Slab Outside Face	1.5 in.	
Sidewall Outside Face	1.5 in.	
Top Slab Inside Face	1.5 in.	
Sidewall Inside Face	1.5 in.	
MATERIAL PROPERTIES		
Main Reinforcing Yield Stress	60 ksi	
Distribution Reinforcing Yield Stress	60 ksi	
Main Reinforcing Type 2 No. of layers	1	
Design Concrete Strength	4 ksi	
Concrete Density	150 pcf	
LOAD FACTORS		
Dead Load Factor (Shear and Moment)	1.5	
Dead Load Factor (Thrust)	1	
Live Load Factor (Shear and Moment)	2.17	
Live Load Factor (Thrust)	1	
PHI FACTORS		
Shear	.85	
Flexure	.9	
REINFORCING DIAMETERS		
Top Slab Outside Face (AS7)	.4 in.	
Bottom Slab Outside Face (AS8)	.4 in.	
Sidewall Outside Face (AS1)	.4 in.	
Top Slab Inside Face (AS2)	.4 in.	
Bottom Slab Inside face (AS3)	.4 in.	
Sidewall Inside Face (AS4)	.4 in.	
MAXIMUM REINFORCING SPACING		
Top Slab Outside Face (AS7)	8 in.	
Bottom Slab Outside Face (AS8)	8 in.	
Sidewall Outside Face (AS1)	8 in.	
Top Slab Inside Face (AS2)	8 in.	
Bottom Slab Inside Face (AS3)	8 in.	
Sidewall Inside Face (AS4)	8 in.	
SOIL LOAD DATA		
Soil Density	120 pcf	
Minimum Lateral Pressure Coefficient	.25	
Maximum Lateral Pressure Coefficient	.5	
Soil Structure Interaction Factor	1	
LIVE LOAD DATA		
Live Load	HS-20	
Direction of Travel	Transverse to culvert flow	
SURCHARGE LOADS		
UNIFORM VERTICAL LOAD		
Magnitude	0 psf	
VARYING LATERAL LOAD		
Magnitude at Top	0 psf	
Magnitude at Bottom	0 psf	
APPLICATION CODE	PERMANENT DEAD LOAD	
FLUID LOADS		
Depth of Fluid	5 ft.	
Fluid Density	62.5 pcf	

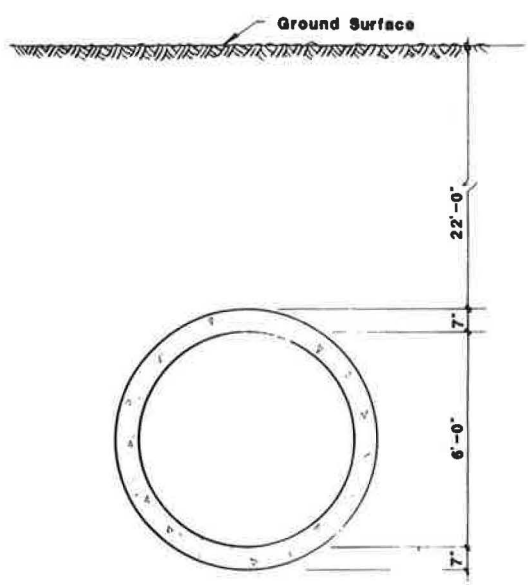

FIGURE 7 Pipe geometry for PIPECAR sample problem.

CONCLUSIONS

Summarized in this paper are the current levels of development of the computer programs PIPECAR and BOXCAR for the structural design and analysis of reinforced concrete pipe and box sections, respectively. The current microcomputer versions of these programs, which were developed for FHWA, are easy to access and operate. With the various live load options that may now be specified by the user, these programs allow users to structurally design reinforced concrete pipe or single-cell rectangular box culverts for almost any given installation condition.

ACKNOWLEDGMENTS

The authors are indebted to Philip Thompson and Thomas Krylowski of FHWA and John Kurdziel of the American Concrete Pipe Association for their support and assistance. The authors also wish to thank cooperative students John E. Moalli and Michael J. Mullaney for the valuable contributions they have made throughout this project.

TABLE 3 DESIGN SUMMARY SHEET FOR BOXCAR SAMPLE PROBLEM

BOX CULVERT DESIGN SUMMARY SHEET
8.0 FT. SPAN X 5.0 FT. RISE

****

INSTALLATION DATA

HEIGHT OF FILL OVER CULVERT, FT	3.000
SOIL UNIT WEIGHT , PCF	120.000
MINIMUM LATERAL SOIL PRESSURE COEFFICIENT	.250
MAXIMUM LATERAL SOIL PRESSURE COEFFICIENT	.500
SOIL - STRUCTURE INTERACTION COEFFICIENT	1.000

LOADING DATA

DEAD LOAD FACTOR - MOMENT AND SHEAR	1.500
DEAD LOAD FACTOR - THRUST	1.000
LIVE LOAD FACTOR - MOMENT AND SHEAR	2.170
LIVE LOAD FACTOR - THRUST	1.000
STRENGTH REDUCTION FACTOR-FLEXURE	.900
STRENGTH REDUCTION FACTOR-DIAGONAL TENSION	.850
LIVE LOAD TYPE	AASHTO HS-20
DIRECTION OF VEHICLE TRAVEL RELATIVE TO CULVERT FLOW	TRANSVERSE

MATERIAL PROPERTIES

MINIMUM SPECIFIED REINFORCING YIELD STRESS, KSI	60.000
CONCRETE - SPECIFIED COMPRESSIVE STRENGTH, KSI	4.000
REINFORCING TYPE	SMOOTH WELDED WIRE FABRIC

GEOMETRY

TOP SLAB THICKNESS, IN.	8.000
SIDE WALL THICKNESS, IN.	8.000
BOTTOM SLAB THICKNESS,IN.	8.000
HORIZONTAL HAUNCH DIMENSION, IN.	8.000
VERTICAL HAUNCH DIMENSION, IN.	8.000
CONCRETE COVER OVER STEEL, IN.	
TOP SLAB-OUTSIDE FACE	1.500
SIDE WALL - OUTSIDE FACE	1.500
BOTTOM SLAB - OUTSIDE FACE	1.500
TOP SLAB - INSIDE FACE	1.500
SIDE WALL - INSIDE FACE	1.500
BOTTOM SLAB - INSIDE FACE	1.500

REINFORCING STEEL DATA

LOCATION		AREA SQ. IN PER FT	STIRRUPS REQUIRED
TRANSVERSE			
SIDE WALL	- OUTSIDE FACE (As1)	.233	NO
TOP SLAB	- INSIDE FACE (As2)	.316	NO
BOTTOM SLAB	- INSIDE FACE (As3)	.291	NO
SIDE WALL	- INSIDE FACE (As4)	.192	NO
TOP SLAB	- OUTSIDE FACE (As7)	.192	NO
BOTTOM SLAB	- OUTSIDE FACE (As8)	.192	NO

TOP SLAB OUTSIDE FACE STEEL MUST EXTEND COMPLETELY ACROSS THE TOP SLAB.
SIDEWALL OUTSIDE FACE STEEL (As1) MUST BE BENT AT THE CORNER AND EXTENDED ACROSS THE TOP SLAB SUFFICIENTLY TO MEET AASHTO REQUIREMENTS FOR TENSION LAPS.

BOTTOM SLAB OUTSIDE FACE STEEL (As8) MUST EXTEND COMPLETELY ACROSS THE BOTTOM SLAB .
SIDEWALL OUTSIDE FACE STEEL (As1) MUST BE BENT AT THE CORNER AND EXTENDED ACROSS THE BOTTOM SLAB SUFFICIENTLY TO MEET AASHTO REQUIREMENTS FOR TENSION LAPS.

TABLE 4 DESIGN SUMMARY SHEET FOR PIPECAR SAMPLE PROBLEM

PIPECAR PIPE CULVERT DESIGN SUMMARY
72.0 INCH DIAMETER REINFORCED CONCRETE CIRCULAR PIPE

****

INSTALLATION DATA	
WEIGHT OF FILL ABOVE CROWN, FT.	22.00
SOIL UNIT WEIGHT , PCF	120.00
SOIL STRUCTURE INTERACTION COEFFICIENT	1.20
LOAD SYSTEM	RADIAL LOAD SYSTEM
LOAD ANGLE DEGREES	240.00
BEDDING ANGLE, DEGREES	120.00
PIPE WEIGHT REACTION BED LENGTH, IN.	.00
MATERIAL PROPERTIES	
REINFORCING - MINIMUM SPECIFIED YIELD STRESS, KSI	65.00
REINFORCING TYPE	SMOOTH WELDED WIRE FABRIC
NO. OF LAYERS OF REINFORCING	1.00
CONCRETE - SPECIFIED COMPRESSIVE STRESS, KSI	5.00
LOADING DATA	
DEAD LOAD FACTORS - MOMENTS AND SHEAR	1.50
DEAD LOAD FACTOR - THRUST	1.00
LIVE LOAD FACTORS - MOMENT AND SHEAR	2.17
LIVE LOAD FACTOR - THRUST	1.00
STRENGTH REDUCTION FACTOR - FLEXURE	.95
STRENGTH REDUCTION FACTOR - DIAGONAL TENSION	.90
LIMITING CRACK WIDTH FACTOR	.90
RADIAL TENSION PROCESS FACTOR	1.00
DIAGONAL TENSION PROCESS FACTOR	1.00
LIVE LOAD TYPE	AASHTO HS-20
PIPE DATA	
WALL THICKNESS, IN.	7.00
INSIDE CONCRETE COVER OVER REINFORCING, IN.	1.00
OUTSIDE CONCRETE COVER OVER REINFORCING, IN.	1.00
FLUID DATA	
WALL THICKNESS, PCF.	62.40
DEPTH OF FLUID, INCHES ABOVE INVERT	72.00
REINFORCING DATA	
INVERT - INSIDE REINFORCING, SQ. IN /FT.	.532
SPRINGLINE - OUTSIDE REINFORCING, SQ. IN./ FT.	.345
CROWN - INSIDE REINFORCING, SQ. IN. / FT.	.293

REFERENCES

1. T. J. McGrath and F. J. Heger. *Structural Design Manual for Improved Inlets and Culverts.* Report IP-83-6, FHWA, U.S. Department of Transportation, June 1983.
2. F. J. Heger and T. J. McGrath. *Design Method for Reinforced Concrete Pipe and Box Sections.* A report by Simpson, Gumpertz & Heger, Inc. for the American Concrete Pipe Association, Dec. 1982.
3. *Standard Specifications for Highway Bridges.* Section 17.4, American Association of State Highway and Transportation Officials, Washington, D.C., 1989.

Publication of this paper sponsored by Committee on Culverts and Hydraulic Structures.