Verification of Composite Behavior of a Precast Decked Simple Span

ROBERTO A. OSEGUEDA, JAMES S. NOEL, AND JOHN J. PANAK

This paper documents the reconstruction of a simple span bridge redecked with full-depth, full-width precast concrete panels connected to act in a composite way with supporting stringers. It also reports the results of full-scale load tests and of an analysis conducted to evaluate the composite behavior of the precast decked span. Eight precast concrete panels, each 6 ft 3 in. × 45 ft × 8 in. thick, were used to form the deck. The panels were cast with holes and positioned on top of supporting stringers with bearing pads measuring 2 in. × 6 in. × 1 in. thick. Steel stud connectors were welded to the top flanges through the holes. Keyways between adjacent panels and deck-stringer gaps were sealed to retain epoxy mortar that was poured through the deck openings. The panels were placed in an operation lasting about 5 hours. Welding the studs, sealing the connections, and pouring the epoxy mortar took about 20 hours. Full-scale load tests were conducted on the redecked span by placing a 13-ton vehicle at different locations while live-load deflections were recorded. A full-composite, finite element model of the bridge was used to correlate the measured deflections. The comparison of measured and full-composite deflections of the model indicates that the span behaves in a full-composite manner.

One recent innovation in the rehabilitation of deteriorated decks is the use of precast concrete panels that are placed transversely on steel stringers (*1–6*). The recent reconstruction of the Woodrow Wilson Memorial Bridge demonstrated how the use of precast panels minimizes traffic interference (*5*). The deck of the six-lane, 5,900-ft-long bridge was replaced in a period of 12 months without the flow of traffic being stopped (*5,6*); the bulk of the work was done in 10-hour night shifts in which portions of the old deck were removed and replaced with panels that were connected using a high-early-strength grouting material. This material developed a compressive strength of 4,000 psi in one hour and allowed for all six traffic lanes to be open during the daytime (*5*).

In the precast method, the panels are connected to each other and to the supporting beams to form a monolithic deck. Shear and normal force transfer between panels is usually accomplished with grouted keyways (*1,2,4,6*). Proper vertical alignment and uniform bearing on the beam floor have been obtained by placing a bed of thick mortar before setting the panels (*1*), by using bearing pads and placing the grout after setting the panels (*4*), or by using bolt-leveling panel supports that are adjusted while the mortar bed is being placed (*3*).

Connection details for assuring composite action between the precast deck and the stringer floor were originally reported elsewhere (*1*) and first used in the experimental reconstruction of two bridges by the New York Thruway Authority (*3*). These details included stud or channel connectors welded to the top flanges or friction bolts attached to the flanges through field-perforated holes. The connectors were typically placed through block-out holes after the panels were set. The holes were subsequently filled with a nonshrinking grout or epoxy mortar. These experimental bridges have been in service for about 14 years, and no major problems have been reported (*3*).

Following the efforts of the New York Thruway Authority, precast decked bridges have now been built in Alabama, California, Indiana, Maryland, Massachusetts, New York, Pennsylvania, Virginia, and West Virginia (*6*). Most of these bridges have a common element: they include grout or epoxy mortar placed at the precast deck-stringer gaps, at the shear keyways between panels, and at the holes around shear connectors or tie anchors.

One of the key questions about such bridges is whether composite action is being achieved and, if it is, what the extent is of the precast deck-stringer interaction.

In recent laboratory studies, a one-third-scale model of a 60-ft-long, simple span bridge was built and tested under static and repetitive loadings (*7-9*). The model was first subjected to static HS-20 service loads (*7*). It was concluded that, at these loads, the horizontal shear for composite action between the precast deck and the stringers is mostly transferred by the cured mortar. Then, in an effort to study the influence of highway loads on the epoxy-mortar connections, 2 million cycles of equivalent HS-20 truck loads were applied to the model (*8*). No changes in the composite sectional properties occurred. Finally, the model was loaded to its ultimate flexural capacity (*9*); the adhesive bond in the deck-stringer gaps held up to 95 percent of the full-composite flexural capacity but failed in a brittle manner. After the bond failure, the shear connectors began to take loads and the system behaved in a ductile mode. These laboratory efforts culminated in the precast redecking of a simple span of the SPUR 326 overpass over the AT&SF Railroad in downtown Lubbock, Texas.

This paper serves two objectives: (1) to report the construction and installation procedures of the precast deck of a 50-ft simple span of the SPUR 326 bridge and (2) to evaluate the degree of composite interaction achieved between the

R. A. Osegueda, Civil Engineering Department, University of Texas at El Paso, El Paso, Tex. 79968. J. S. Noel, Civil Engineering Department, Texas A&M University, College Station, Tex. 77843. J. J. Panak, Bridge Division, Texas State Department of Highways and Public Transportation, 11th and Brazos, Austin, Tex. 78701.

precast deck and stringers by analyzing results of full-scale load tests. The composite interaction is evaluated by comparing measured deflections to values obtained from a full-composite finite element model of the span.

DESCRIPTION AND HISTORY OF THE BRIDGE

The original SPUR 326 bridge consisted of two separate structures. Each structure contained two lanes of traffic and had a length of 545 ft divided into three parts: a 50-ft simple span, a four-span 290-ft continuous unit, and a three-span 205-ft continuous unit. The structures had been built in 1958 and included a 33-ft-wide, 6½-in.-thick concrete slab supported on four longitudinal steel stringers. In 1968, because the deck was deteriorating, the bridge was redecked with a 7¾-in. slab. Other modifications, such as the addition of shear connectors and cover plates, resulted from the increase in dead load.

During late 1986 and 1987, justified by signs of early deterioration and the need to widen the roadway to accommodate increasing traffic volume, a second rehabilitation was performed on the bridge. The slab width and thickness were increased, respectively, to 45 ft and 8 in. This resulted in the addition of two outer beams at each of the structures. Figure 1 shows a plan view of the bridge.

The 50-ft span of the west structure was redecked using full-depth precast concrete panels; the rest of the bridge was redecked using cast-in-place concrete. A favorable aspect of this bridge, from the research point of view, is that the precast span is a mirror image of the cast-in-place simple span on the east structure. Side-by-side, long-term comparisons of the integrity of both decks will provide valuable data because both decks will be subjected to about the same loading and environmental conditions.

DESCRIPTION OF PRECAST DECKED SPAN

The precast decked span was designed in accordance with the AASHTO Specifications for Highway Bridges (*10*) and consisted of eight full-depth, full-width panels connected to six stringers, as shown in Figures 2 and 3. Four existing stringers,

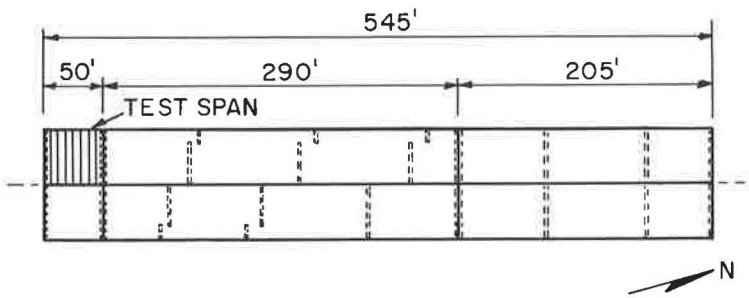

FIGURE 1 Plan view of SPUR 326 Bridge.

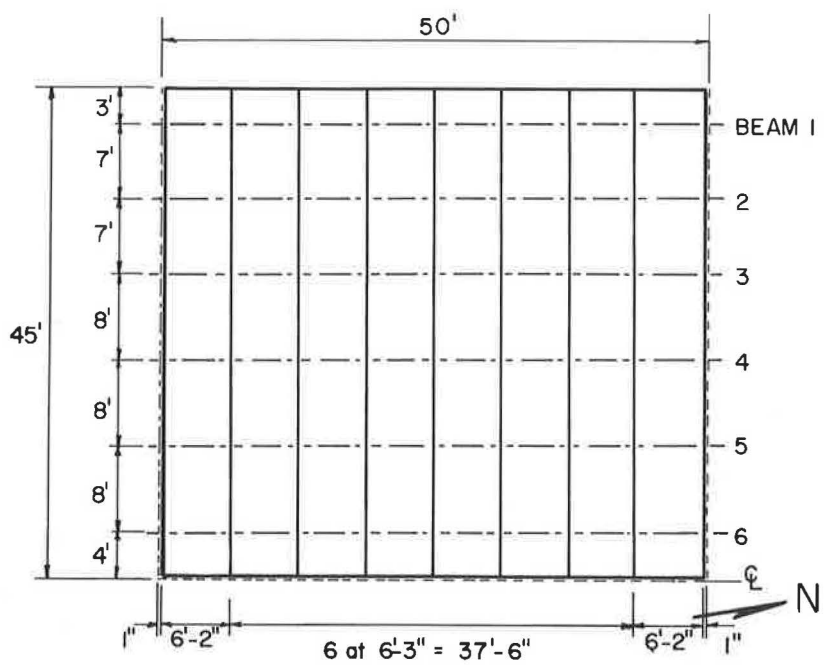

FIGURE 2 Plan view of precast decked span.

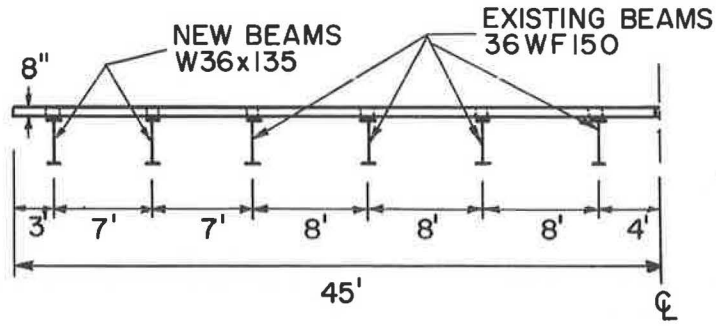

FIGURE 3 Transverse cross section of precast decked span.

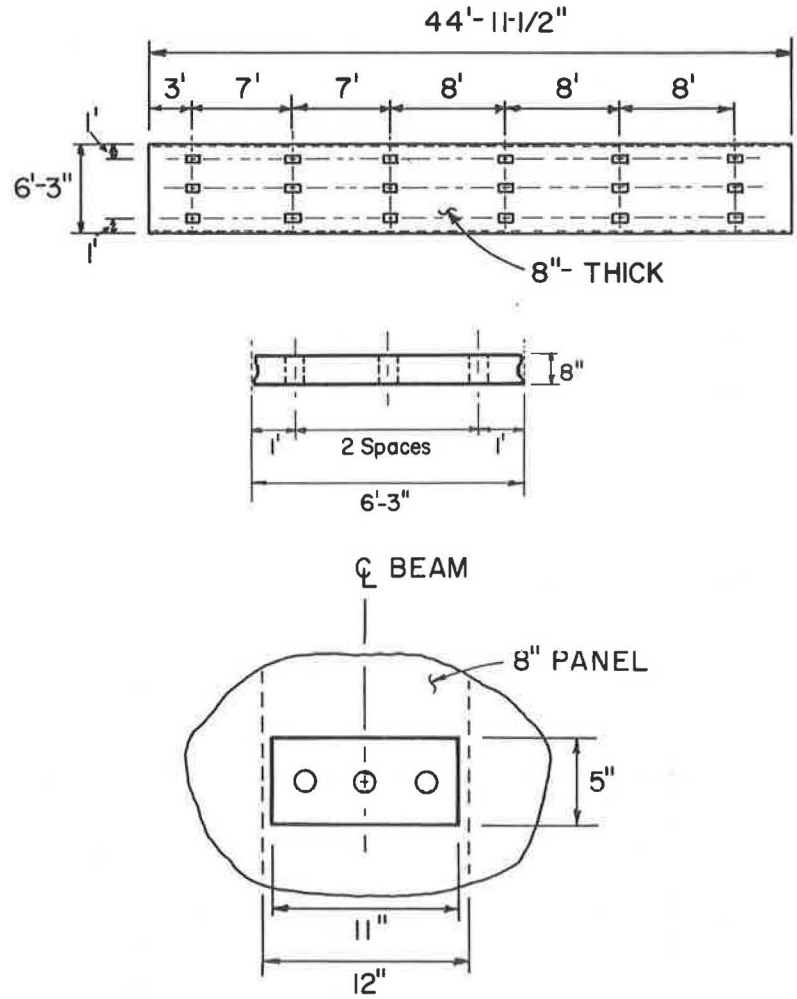

FIGURE 4 Precast panel details: *top*, plan view; *middle*, side view; and *bottom*, block-out hole.

old standard 36WF150 sections (*11*), are spaced 8 ft apart; two new beams, W36x135 sections (*12*), are spaced 7 ft apart from the outermost existing stringers.

Figure 4 shows the panel details. The panels were 8 in. thick, 44 ft 11½ in. wide, and 6 ft 3 in. long. Each panel included three block-out holes per stringer to accommodate stud connectors. The transverse sides of the panels were grooved so that the keyway shown in Figure 5 was formed between two panels.

The panels were designed to be seated temporarily on the longitudinal beams at two locations at each beam through neoprene-bearing pads, as shown in Figure 5. Because the panels and the beams were flexible, control of bending stresses was necessary. This was accomplished by limiting the size of the pads and using a 50-durometer material. Keeping in mind a maximum of ⅛ in. of tolerance in pad grading, the elastic support supplied to the panels by the pads was designed to create not more than 200 psi of bending stress. This analysis

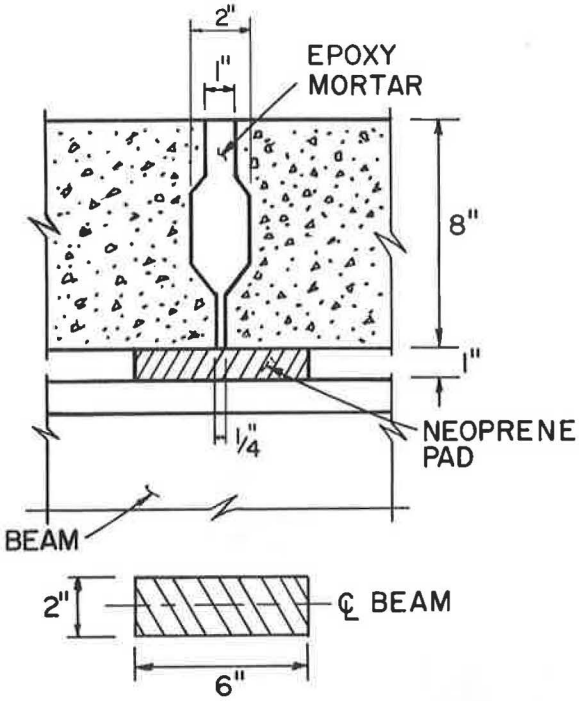

FIGURE 5 Typical keyway and panel bearing detail.

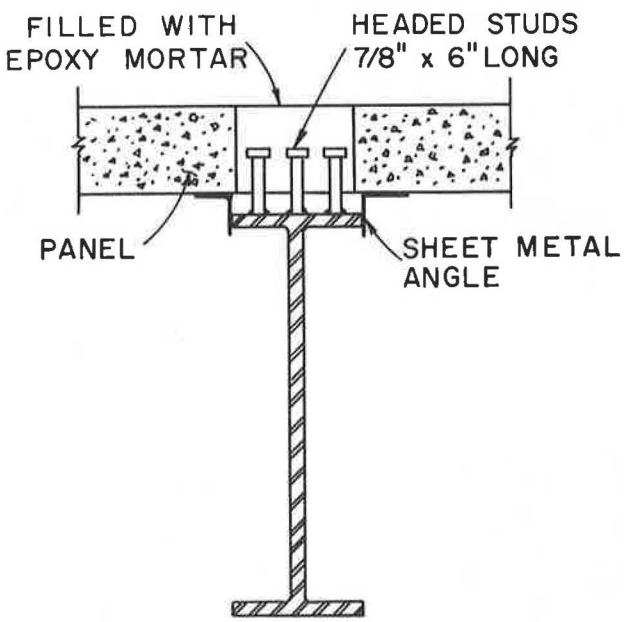

FIGURE 6 Typical shear connector details.

was performed by considering the panels as elastic members supported on discrete elastic supports at each pad location. The designed dimensions of the pads were 2 in. × 6 in. × 1 in. thick. The pads were designed to compress by ⅜ in. after the panels were placed. This was verified during panel placement.

The gaps formed between the panels and the beams and the deck openings were filled with epoxy mortar obtained by mixing a minimum of three parts of dry sand to one part of epoxy, by weight.

Three shear connectors, ⅞ in. in diameter by 6 in. long, were designed to fit in each opening and to be welded to the top flanges after the panels were seated. Figure 6 shows the shear connector details. Sheet metal angles were tack-welded to the compression flanges to retain the mortar within the deck-stringer gaps.

CONSTRUCTION AND DECK INSTALLATION PROCEDURES

The panels were fabricated in sets of three at a casting bed constructed next to the span (Figure 7). They were allowed to cure for 10 days before they were moved by a crane using a four-point pickup arrangement (Figure 8, *top*). The panels were temporarily stored in an adjacent lot and supported using a similar four-point arrangement (Figure 8, *bottom*). Elevations at points of the casting bed corresponding to the bearing points of the panels at the beams were recorded for later matching with beam elevations.

After new abutments and bent caps were completed, the new beams were positioned and braced at the ends and at the midspan. The removal of the deck and existing shear connectors proceeded, and the top flanges were left bare and clean. The bearing pads were subsequently placed on top of shim plates designed to correct for differences in beam elevations and to provide the grading for the proper crown and vertical curve of the roadway (Figure 9).

During placement of the panels, two cranes were used. The stationary one was used to place the panels on the supporting beams, and the other one moved the panels from the storage lot to within reach of the stationary crane.

To ensure a uniform distribution of the weight of each panel on all its bearing pad supports, beam elevations were again recorded at the bearing points just prior to placing the panel; they were later compared to those taken at the corresponding points of the casting bed. The shims were then readjusted to minimize distortions of the panel with respect to its original casting elevations. The compression of the pads was measured after the panels were placed, and the pad grading was found to be within the ⅛-in. tolerance specified in the design.

All panels were positioned on the beams during a lapse time of 5 hours. Figure 10 shows a panel being positioned,

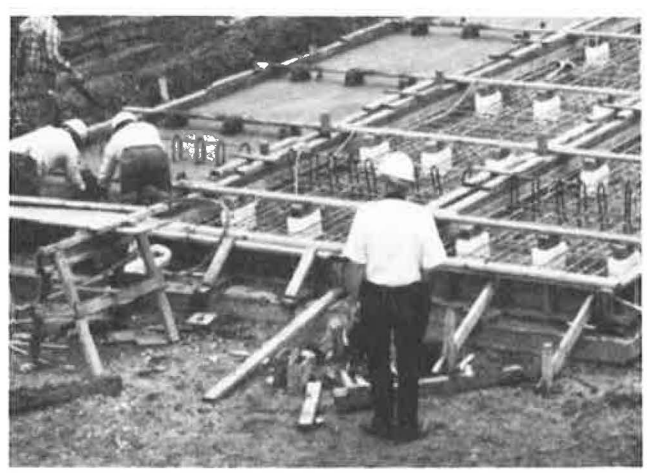

FIGURE 7 Casting bed located next to bridge.

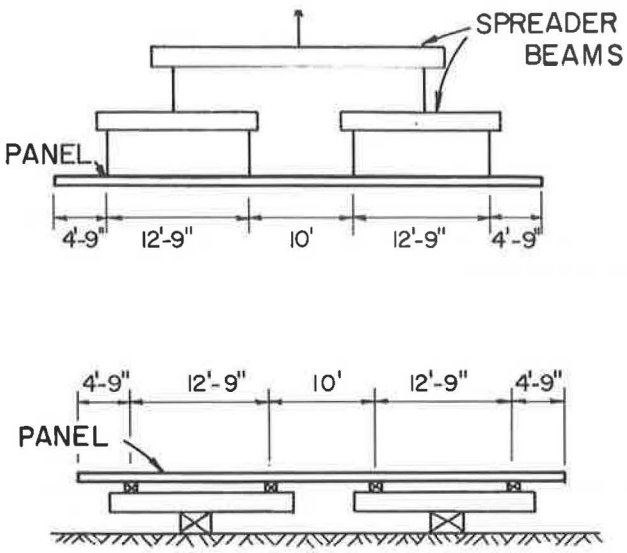

FIGURE 8 ***Top*, four-point pickup and *bottom*, temporary support arrangements of precast panels.**

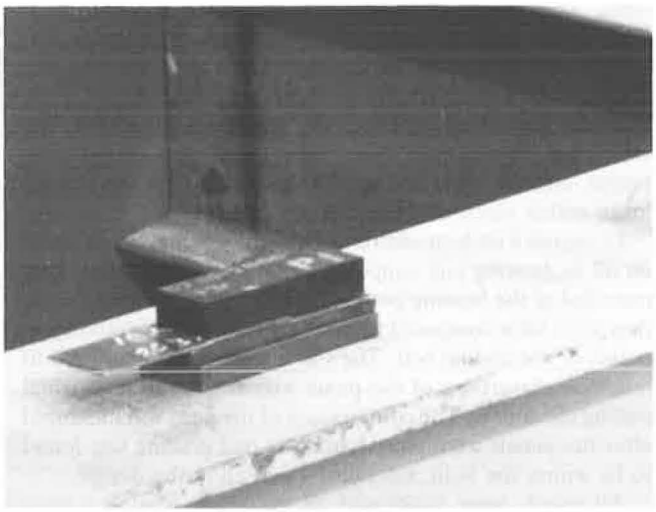

FIGURE 9 Typical bearing pad and shims.

and Figure 11 shows a view from under the bridge after all the panels were placed. Studs were welded through the holes, the sheet metal angles were installed, and the keyways were sealed with wood strips.

The epoxy was then mixed in five-gallon containers with preweighed dry sand, using large drills that had mixing paddles attached. The mortar was poured through the holes until the deck-stringer gaps and the holes were completely filled (Figure 12). The keyways were later filled with the help of trapezoidal funnels.

Welding the studs, installing the sheet metal angles, and placing the mortar took about 20 hours to complete. Samples of the mortar were tested at 7 days, and all exhibited compressive strengths in excess of 7,000 psi.

FIGURE 10 View of a panel being placed.

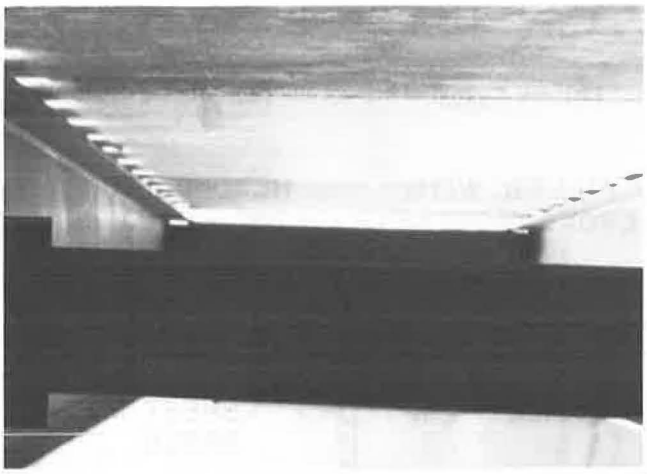

FIGURE 11 View from under the bridge after all panels were placed.

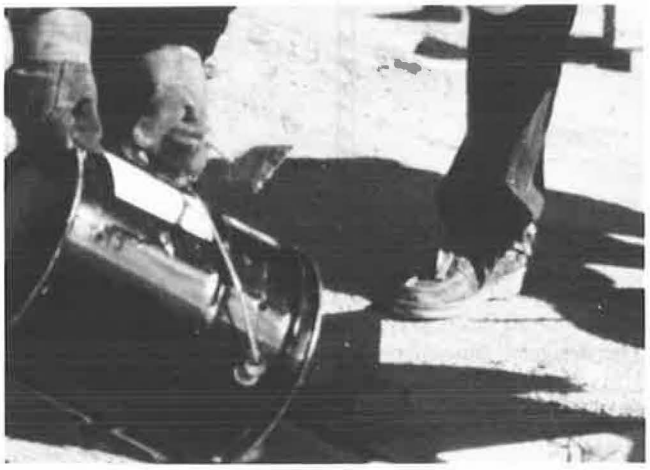

FIGURE 12 Pouring the epoxy mortar through the block-out holes.

EXPERIMENTAL PROCEDURE AND RESULTS

Full-scale load tests were performed about 45 days after installation of the precast deck was completed. The tests consisted of placing a loading vehicle at different locations on the bridge while the live-load deflections were recorded at several points.

The loading vehicle consisted of a dump truck-type Chevrolet V8-60 with a gross weight of 25,940 lb.: 6,820 lb. on the front axle and 19,120 lb. on the rear axle. The truck and its axle and wheel spacings are shown in Figure 13.

Specially designed devices were made so that deflections could be measured with respect to the riprap directly below the points of measurements. A schematic and a photograph of a typical device are shown in Figure 14. Each device consisted of piano wire, plates, a turnbuckle, soft springs, and a dial indicator. The turnbuckle was employed for pretensioning the device to about a ½-in. extension. The concepts of this device are as follows. Deflections at the stringers are reflected by vertical movements of the middle plate; these, in turn, are indicated by the dial gage. If the system is linear, the deflections are proportional to the indicated measurements. If the piano wire is much stiffer than the springs, the constant of proportionality is near 1. A similar arrangement was set up inside the laboratory, and the length of the wire was varied from 5 to 25 ft. Indicated measurements at the bottom exhibited a maximum of 2 percent error with respect to induced deflections at the top when the wire was 25 ft long. Therefore, the use of calibration factors in the field was judged impractical.

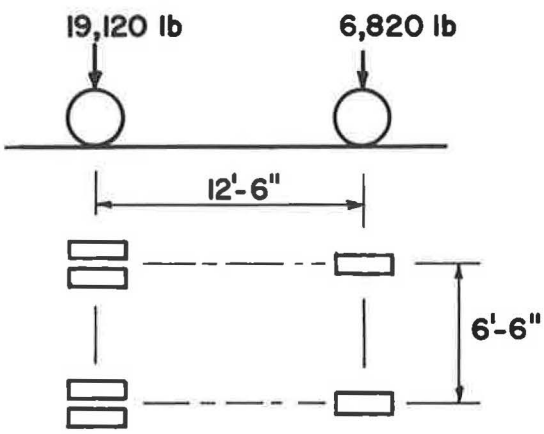

FIGURE 13 Loading vehicle. *Top*, wheel distribution and axle loads and *bottom*, photograph of vehicle.

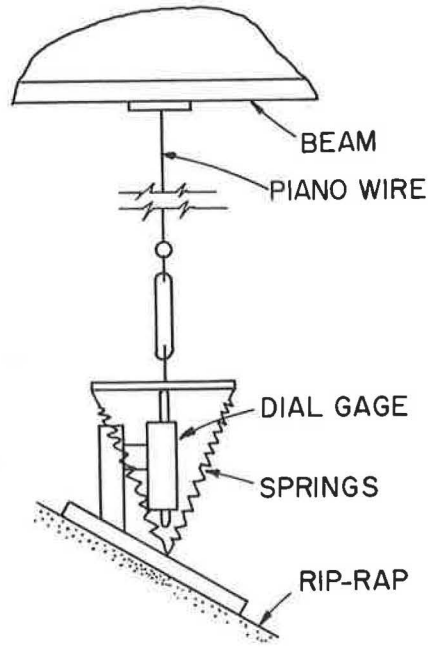

FIGURE 14 Typical deflection measuring device. *Top*, schematic and *bottom*, view of installed device.

Figure 15 illustrates the points of deflection measurements. The devices were installed at six midspan locations (Stations 1–6) and at five south-quarter points (Stations 7–11). Only the south-half span was instrumented because of symmetry about the midspan. Because the beams were seated on 2½ in.-thick neoprene pads, Stations 12 and 13 were used to measure the neoprene deformations while the right wheel of the rear axle was placed on top of Station 12 and the left wheel of the same axle was 1 ft 6 in. west of Station 13. From

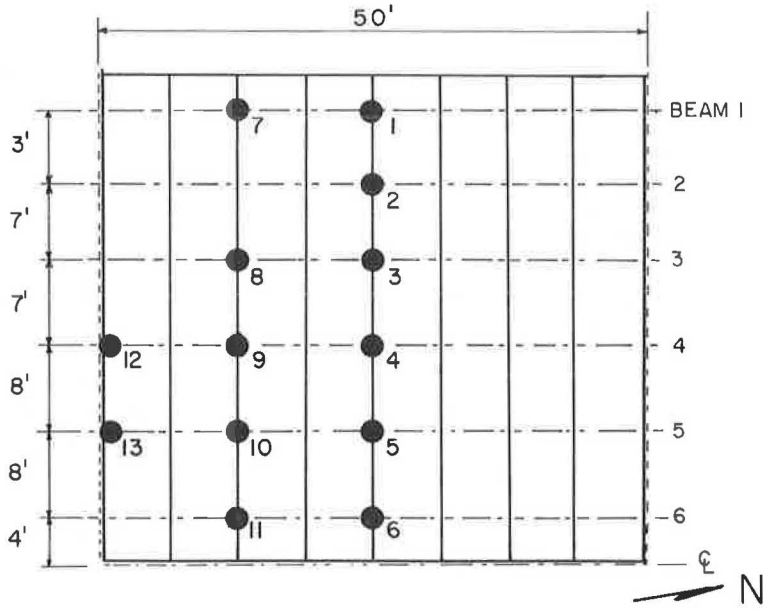

FIGURE 15 Location of points of measurements.

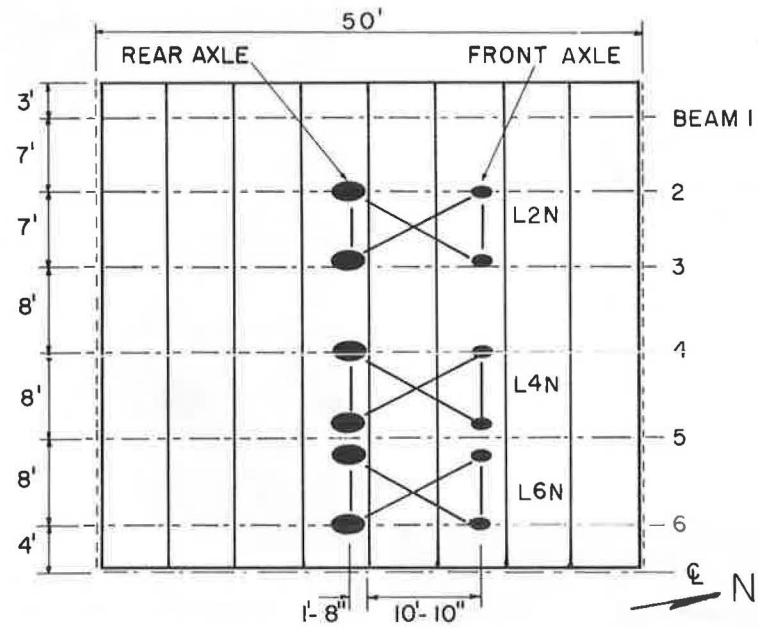

FIGURE 16 Position of vehicle for loadings L2N, L4N, and L6N.

the recorded deformations and estimated reactions at Stations 12 and 13, an average support spring modulus of 5,500 K/in. was found. This value was assumed to be representative of all beam supports and was used in the analytical model of the span.

Six primary loading conditions were applied to maximize the bending moments at the midspan of Beams 2, 4, and 6. In loadings L2N, L4N, and L6N (Figure 16), the truck was positioned facing north. Meanwhile, in loadings L2S, L4S, and L6S (Figure 17), the vehicle was placed facing south. The N- and S-series loadings are mirror images of each other about the midspan. Because the bridge is symmetric about the midspan, the deflections of the north-quarter points can be extrapolated from the measured values at the south-quarter points (Stations 7–11) by reversing the vehicle with respect to the midspan. Consequently, complete deflection profiles were obtained for three of the loadings.

The procedure for recording deflections was as follows. First, the dial gages were set to zero while the span was unloaded. Second, the truck was moved into position. Third, the deflection readings were recorded. And last, the vehicle was removed from the span, and the dial gages were reset for

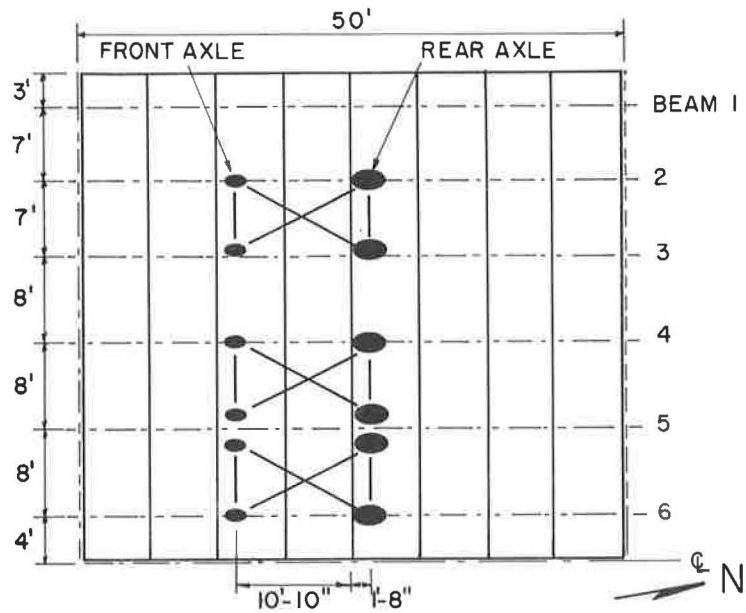

FIGURE 17 Position of vehicle for loadings L2S, L4S, and L6S.

TABLE 1 DEFLECTION MEASUREMENTS

	Measured Deflection (inches)					
	Loading					
Station[a]	L2N	L2S	L4N	L4S	L6N	L6S
1	.026	.025	.002	.000	.000	-.002
2	.044	.043	.010	.010	.000	-.001
3	.042	.042	.023	.024	.003	.002
4	.021	.020	.045	.045	.018	.016
5	.008	.006	.039	.040	.053	.049
6	-.002	-.003	.020	.021	.073	.073
7	.0169	.0169	.0011	-.0003	.0000	-.0005
8	.028	.030	.018	.019	.001	.003
9	.014	.015	.029	.031	.012	.012
10	.004	.004	.025	.027	.030	.030
11	-.001	-.002	.014	.014	.049	.051

a) For location of station see Figure 15

the next loading. Thereafter, the same procedure was repeated for each truck position.

The recorded deflections for the six loadings are listed in Table 1. The deflections at the north-quarter points were then inferred for the N-series loadings and are listed in Table 2. The midspan deflections are the average values of the corresponding loading series.

FULL-COMPOSITE MODEL OF SPAN

To ascertain the degree of composite interaction between the precast concrete deck and the stringers, the measured deflections are compared to deflections obtained from a finite element model of the full-composite bridge. The computer program SLAB49 (*13*) was used.

TABLE 2 BEAM DEFLECTIONS FOR LOADINGS L2N, L4N, AND L6N

Beam	Location	Deflection (inches) L2N	L4N	L6N
1	SQP[a]	0.0169	0.0011	0.0000
1	MSP	0.0255	0.0010	-0.0010
1	NQP	0.0169	-0.0003	-0.0005
2	SQP	N/A	N/A	N/A
2	MSP	0.0435	0.0100	-0.0005
2	NQP	N/A	N/A	N/A
3	SQP	0.0280	0.0180	0.0010
3	MSP	0.0420	0.0235	0.0025
3	NQP	0.0300	0.0190	0.0030
4	SQP	0.0140	0.0290	0.0120
4	MSP	0.0205	0.0450	0.0170
4	NQP	0.0150	0.0310	0.0120
5	SQP	0.0040	0.0250	0.0300
5	MSP	0.0070	0.0395	0.0510
5	NQP	0.0040	0.0270	0.0300
6	SQP	-0.0010	0.0140	0.0490
6	MSP	-0.0025	0.0205	0.0730
6	NQP	-0.0020	0.0140	0.0510

a) SQP = South Quarter Point, MSP = Midspan, and NQP = North Quarter Point

The concrete's elastic properties were determined from seven cylindrical samples taken while the panels were being cast. The samples were tested during the time of the load tests. From the initial portion of recorded stress-strain curves, an elastic modulus was calculated for each sample. An average value of 3,900 ksi was determined; the minimum and maximum values were 3,650 ksi and 4,100 ksi, respectively. The average concrete elastic modulus and a Poisson's ratio of 0.2 were assumed to be representative of all panels. An elastic modulus of 29,000 ksi was assumed for the steel stringers.

The longitudinal composite cross-sectional properties were computed using the transformed area method. A full, effective slab width and a deck-stringer gap dimension of 1.75 in. were assumed for these calculations. The composite sectional properties for the six stringers are listed in Table 3.

The finite element model was built by specifying a rectangular grid with 45 transverse and 40 longitudinal intervals.

TABLE 3 PROPERTIES OF FULL-COMPOSITE SECTIONS

Beam	Steel Section	Effective Slab width (in.)	I_s [c] (in.^{4})
1	W36x135[a]	78.	23,200
2	W36x135	84.	23,500
3	36WF150[b]	90.	26,500
4-6	36WF150	96.	26,900

a) Ref. [12], I=7800 in.^{4}, A=39.7 in^2, d=35.55 in.

b) Ref. [11], I=9012 in.^{4}, A=44.2 in^2, d=35.84 in.

c) I_s transformed to steel, E=29,000 ksi and E_c = 3,900 ksi

Plate and beam elements were used. The input parameters for the plate elements consisted of the plate bending and twisting stiffnesses. The beam stiffness values entered in the program consisted of the full-composite moment of inertia listed in Table 3, multiplied by 29,000 ksi, and the longitudinal plate bending stiffness contribution from the effective width of the slab subtracted from the product.

A noncomposite model of the span was also constructed to determine the deflections assuming there is no interaction between the deck and the beams. This was done by using the same procedure as for the full-composite model, but the longitudinal beam stiffnesses were computed by considering only the properties of the steel section.

For both models, each end support was assumed to be elastic, with a spring modulus of 5,500 K/in. The diaphragms and cross braces were also modeled. The wheel loads were considered by specifying concentrated loads acting at the respective station coordinates.

COMPARISON OF MEASURED AND FULL-COMPOSITE DEFLECTIONS

Figures 18 through 20 illustrate the full-composite beam deflection profiles and the measured deflections listed in Table 2. During loading L2N, where the left wheels of the truck were placed on Beam 2, the measured deflections are generally a little smaller in magnitude than the predicted full-composite deflections (Figure 18). The same comparison can be made for the deflections during loading L4N (Figure 19), but the measured midspan deflection of Beam 4 is about 7 percent larger than the full-composite value. And during loading L6N (Figure 20), the measured deflections are almost identical to the full-composite deflections except for the midspan deflection of Beam 5. In general, the measured deflections and the full-composite deflections are in good agreement.

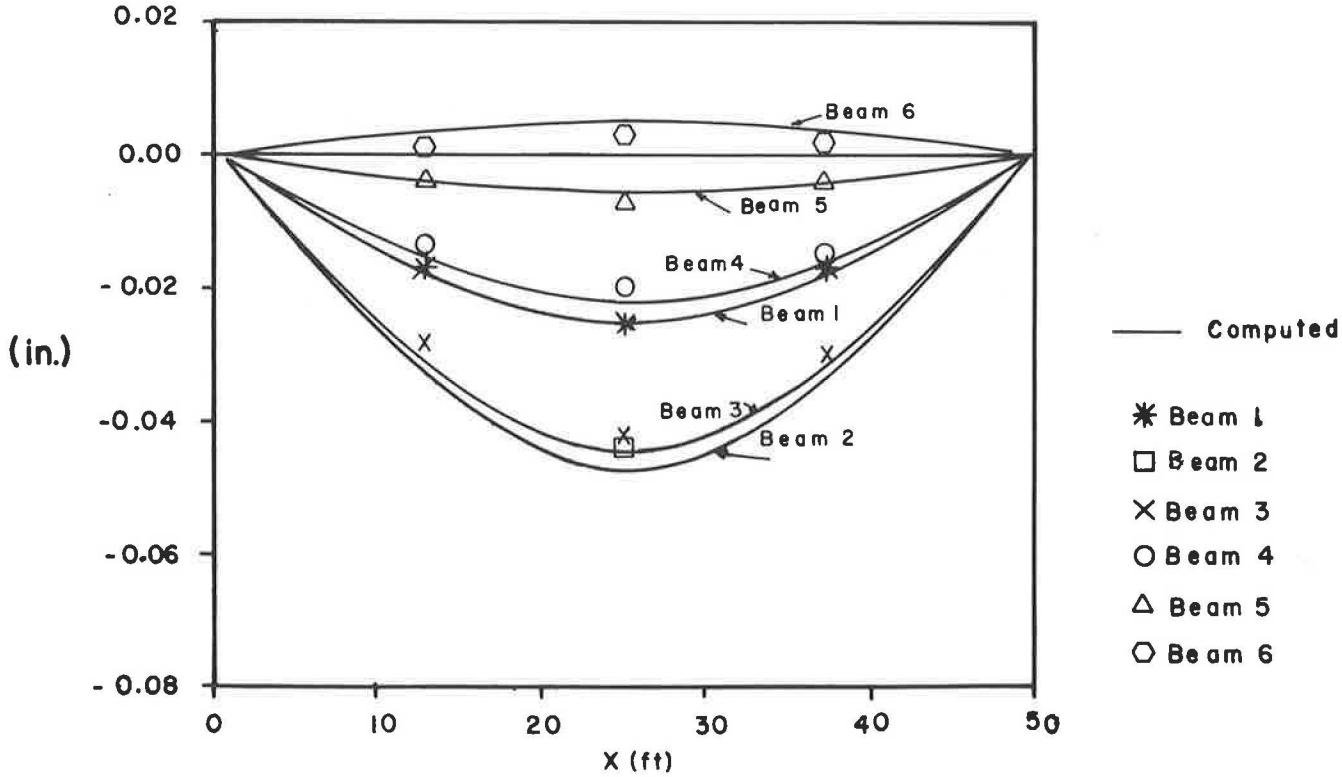

FIGURE 18 Measured deflections and deflection profiles of full-composite model, loading L2N.

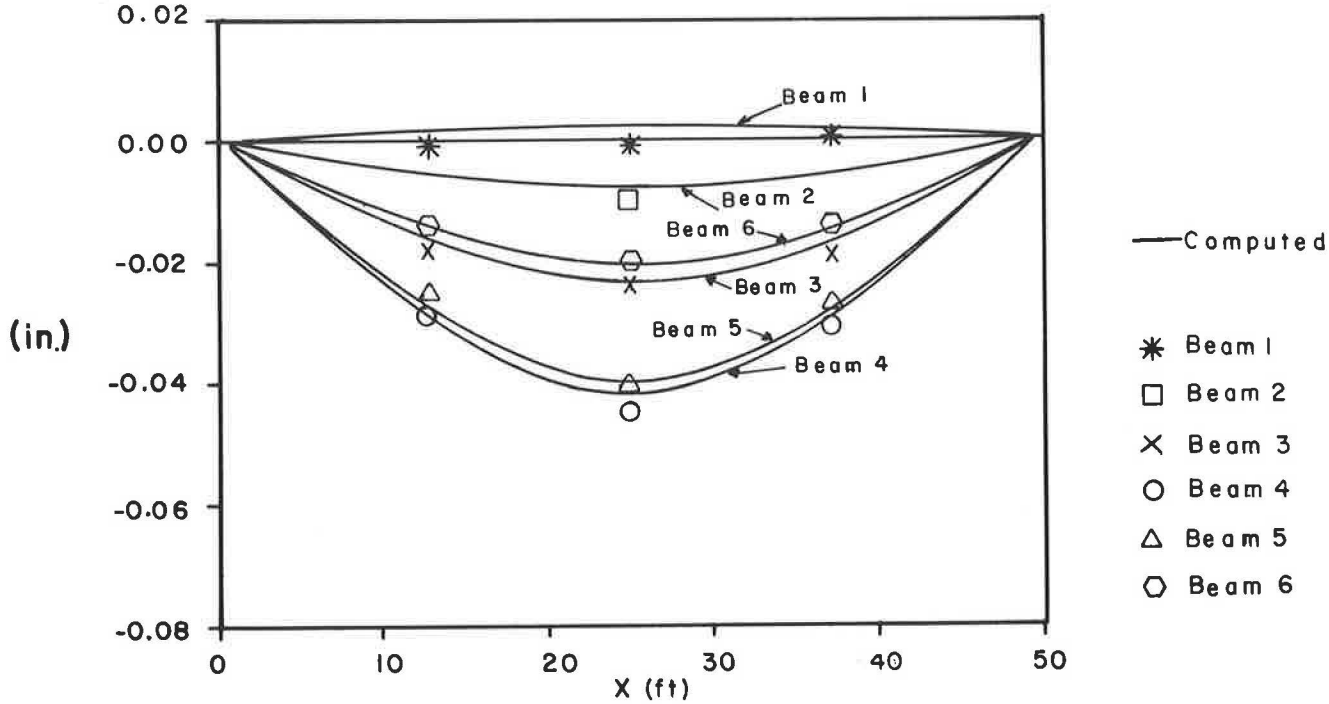

FIGURE 19 Measured deflections and deflection profiles of full-composite model, loading L4N.

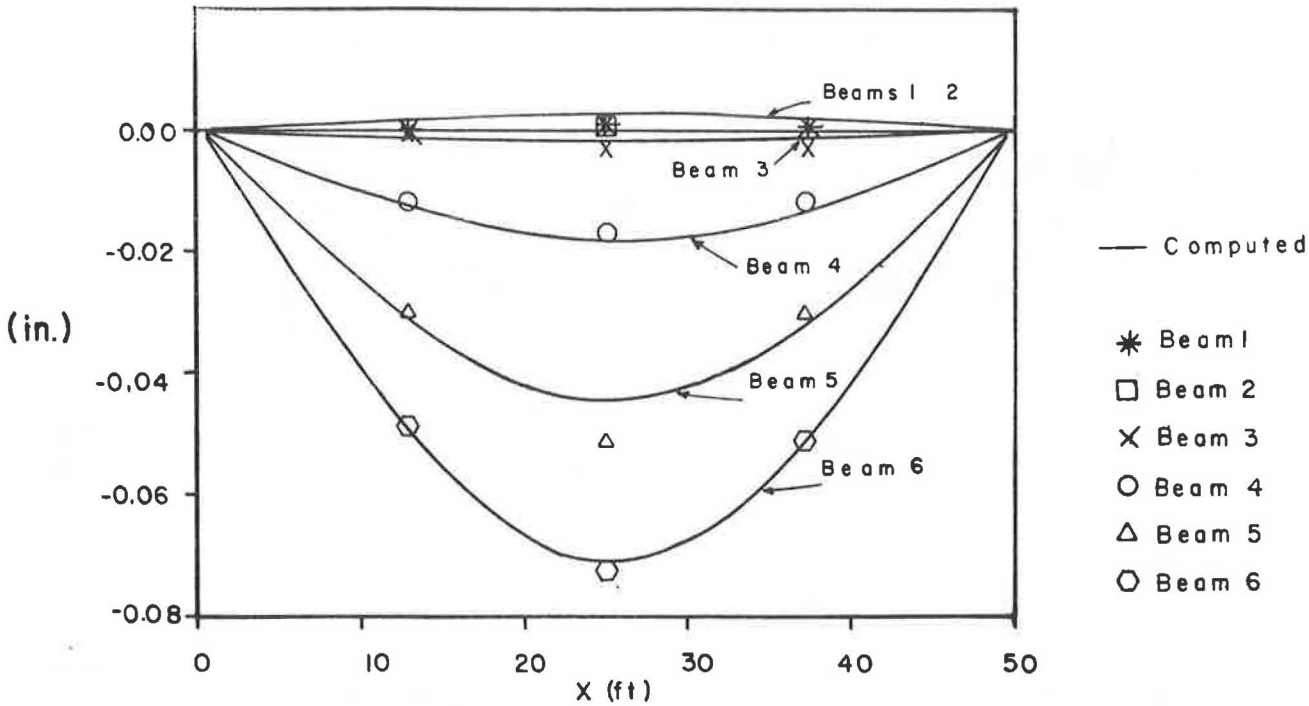

FIGURE 20 Measured deflections and deflection profiles of full-composite model, loading L6N.

TABLE 4 COMPARISON OF MAXIMUM MEASURED AND COMPUTED DEFLECTIONS

		Maximum Deflection (inches)		
			Computed	
Loading	Beam	Measured	Full-Composite	Non Composite
L2N	2	0.044	0.047	0.118
L4N	4	0.045	0.042	0.094
L6N	6	0.073	0.072	0.181

Table 4 illustrates a comparison of the maximum measured deflections with the maximum computed deflections of the full-composite and noncomposite models of the span. On the average, the analytical maximum noncomposite deflections are about 140 percent larger than the maximum measured values. The maximum computed full-composite deflections are within 7 percent of the maximum measured deflections.

Therefore, the agreement of the measured deflections with deflection profiles of the full-composite model and the comparison of the maximum measured values with those of the full-composite and noncomposite models provide evidence that the span behaves in a full-composite manner.

CONCLUSIONS

The construction of the precast deck of a simple span of the SPUR 326 bridge in Lubbock, Texas, with full-depth full-width precast concrete panels has demonstrated the viability of the precast method in reconstructing a bridge deck rapidly. All eight panels were placed and connected to the supporting longitudinal steel beams in about 25 nonconsecutive hours.

Deflection measurements correlated with analytical deflections of a full-composite model of the span have conclusively shown that a complete interaction is accomplished between the precast deck and the supporting steel beams. The maxi-

mum deflections measured during field load tests were found to be within 7 percent of those computed using a full-composite model of the span. Furthermore, the maximum deflections of a noncomposite model were found to be 140 percent larger than those measured.

The use of small, deformable neoprene pads as temporary supports to the panels until placement of the epoxy mortar was demonstrated to be a viable method of controlling the bending stresses in the panels during placement. The large deformations of the pads allow for a more uniform distribution of the panels' weight onto all bearing supports.

Some improvements on the construction method suggested as a result of observing the field construction follow:

1. Separate neoprene pads at each panel edge rather than a common pad would allow simpler grading of the panels and would accommodate slight variations in panel thicknesses.
2. Ready-made sealers, such as caulking strips or rods, would be easier to use and take less time to install than sheet metal angles.
3. A commercially available mortar mixer would provide better epoxy grout mixing equipment.
4. A field grading control procedure that would allow input of actual beam elevations at each pad support, the corresponding form elevations, the top of the panel elevations when in the form, the calculated beam deflections, and the planned final roadway elevations would simplify the field grading process.

ACKNOWLEDGMENTS

This study was executed by the Texas Transportation Institute, The Texas A&M University System, and was sponsored by the Texas State Department of Highways and Public Transportation (SDHPT) in cooperation with the U.S. Department of Transportation, Federal Highway Administration (FHWA). The Bridge Division of the SDHPT performed the design of the reconstruction of the SPUR 326 Bridge. The authors gratefully recognize the contractors, J.D. Abrams Construction Co. and MCS Construction Co., for scheduling their construction program around research and testing activities.

REFERENCES

1. M. Biswas, J. S. B. Iffland, R. E. Schofield, and A. E. Gregory. Bridge Replacements with Precast Concrete Panels. In *Special Report 148: Precast Bridge Deck Replacement Applications*, TRB, National Research Council, Washington, D.C., 1974, pp. 136–148.
2. C. V. Knudsen. Re-decking of a Bridge with Precast Concrete. *Civil Engineering—ASCE*, Vol. 50, April 1980, pp. 75–77.
3. C. Slavis. Precast Concrete Deck Modules for Bridge Deck Reconstruction. In *Transportation Research Record 871*, TRB, National Research Council, Washington, D.C., 1982, pp. 30–32.
4. R. H. Berger. Full-Depth Modular Precast, Prestressed Bridge Decks. In *Transportation Research Record 903*, TRB, National Research Council, Washington, D.C., 1983, pp. 52–59.
5. J. G. Lutz and D. J. Scalia. Deck Widening and Replacement of Woodrow Wilson Memorial Bridge. *Journal of Prestressed Concrete Institute*, Vol. 29, No. 3, 1984, pp. 74–93.
6. M. M. Sprinkel. *NCHRP Synthesis of Highway Practice 119: Prefabricated Bridge Elements and Systems*. TRB, National Research Council, Washington, D.C., Aug. 1985, pp. 6–12.
7. R. A. Osegueda and J. S. Noel. *Positive Moment Tests for Precast Concrete Panel-Decked Composite Bridges*. Research Report 324-1. Texas Transportation Institute, Texas A&M University System, College Station, Texas, Sept. 1987.
8. R. A. Osegueda and J. S. Noel. *Repetitive Load Test on Composite Precast Decked Bridges*. Research Report 324-3. Texas Transportation Institute, Texas A&M University System, College Station, Texas, April 1986.
9. R. A. Osegueda and J. S. Noel. *Rapid Bridge Deck Replacement: A Field Demonstration and Load Test*. Research Report 324-5F. Texas Transportation Institute, Texas A&M University System, College Station, Texas, May 1988.
10. *Standard Specifications for Highway Bridges*. American Association of State Highway and Transportation Officials, Washington, D.C., 1983.
11. *Steel Construction Manual*, 4th ed. American Institute of Steel Construction, New York, 1963.
12. *Steel Construction Manual*, 8th ed. American Institute of Steel Construction, New York, 1980.
13. J. J. Panak and H. Matlock. *A Discrete Element Method of Analysis for Orthogonal Slab and Grid Bridge Floor Systems*. Research Report 56-25. Center of Highway Research, University of Texas at Austin, May 1972.

Publication of this paper sponsored by Committee on Structures Maintenance.