Overview of Pennsylvania's Generic Design and Construction Specifications for Prefabricated Walls

M. G. PATEL, R. N. SHAH, U. DASH, AND N. V. VED

The introduction of proprietary walls in the early 1970s has necessitated the development of generic specifications to encourage competition. The Pennsylvania Department of Transportation (PennDOT) has developed such specifications to combine the mechanically stabilized earth wall with the modular wall. This combination creates a prefabricated wall. This paper gives an overview of the policy and procedure, design, and construction requirements for prefabricated walls. PennDOT uses prefabricated walls as an alternative to conventional reinforced-concrete walls. The discussion covers applicability of these walls to specific site and loading conditions, limitations, tolerances, factors of safety, dimensional limitations, design parameters, drainage, and life requirements. The special design and loading considerations are also presented.

In the early 1970s proprietary walls were introduced in the United States and over 40 proprietary walls have since been constructed or are under construction in Pennsylvania. However, no generic design or construction specifications are available nationally. The design and construction specifications developed by the proprietary wall suppliers have been used, with a few modifications, by the Pennsylvania Department of Transportation (PennDOT). It is believed that the rest of the country also uses the suppliers' design and construction specifications, as this field has evolved rapidly during the last decade.

Because of the impending expiration of most patents to proprietary walls and their frequent use in Pennsylvania, PennDOT developed generic design and construction specifications for the mechanically stabilized earth (MSE) wall and the modular (gravity type) wall. When these walls are combined, a prefabricated wall is created. (In 1985, PennDOT retained a consultant and undertook this project in order to update all sections of *Design Manual, Part 4* (*1*) and to use the latest advancements in the bridge design technology.)

The development of these specifications was important because PennDOT permits alternative designs by contractors in the construction stage of highway and bridge projects. These generic design specifications and a general outline plan provide a common base for preliminary design to determine bid quantities by contractors during the bidding stage.

This paper is a condensed version of the Prefabricated Walls Section of the PennDOT *Design Manual, Part 4* (DM-4) (*1*). The DM-4 may be used for specific references and detailed commentary on the specifications.

An overview of the policy, procedure, and design requirements for MSE and modular walls is given. The design criteria include structure selection (e.g., technical considerations and restrictions, foundation submissions, permitted settlement), design parameters (e.g., structure dimensions, earth pressures, external and internal stability, bearing capacity and foundation stability, pullout design parameters, allowable stresses, factors of safety, drainage requirements, design life requirements), and special design considerations. The specifications for material and construction of these walls, including specific requirements of special fill material for drainability and friction, are available from PennDOT.

This paper also gives an overview of how these specifications are implemented in an open alternative bidding environment. It should be noted that bidders are not required to identify chosen wall type until after the bids have been accepted. PennDOT has been permitting alternative designs by contractors since the early 1980s. Because prefabricated walls have been noticeably economical when marginal sites with poor-to-moderate foundation soils are used and also when the total area is greater than 2,000 ft^2, PennDOT has been permitting their usage even for abutments. Alternative designs by contractor concept or value engineering concept are acceptable.

OVERVIEW OF POLICY AND PROCEDURE

General

Approved prefabricated walls are permitted in competition with conventional reinforced-concrete walls where conventional wall design is provided. If conventional walls are clearly not competitive, they should not be designed.

During the design phase of a project, if it becomes necessary for the designer to obtain detailed information on any of the approved prefabricated-wall companies, the suppliers of all wall types should be contacted to offer the same degree of involvement. (As of November 1988 PennDOT approved reinforced earth, retained earth, and Doublewal® prefabricated walls.)

Pennsylvania Department of Transportation, Transportation and Safety Building, Harrisburg, Pa. 17120.

Systems Approval

All new wall systems should go through PennDOT's product evaluation or experimental item approval process, or both, prior to their unrestricted usage on PennDOT projects.

Selection Procedure

All feasible, innovative, cost-saving alternatives should be considered, as follows:

- All approved and feasible wall systems should be used for a project,
- Value engineering: contractors may propose any cost-saving, equivalent approved alternative, and
- Experimental systems will not be permitted as alternatives.

Economic Considerations for Project Selection

A prefabicated retaining wall for a particular project requires the determination of its technical feasibility and its comparative economy.

MSE walls are generally more economical than conventional walls when

- The retaining wall has a total area greater than 2,000 ft^2,
- The average wall height is greater than 10 ft with no traffic barrier,
- The average wall height is greater than 15 ft with a traffic barrier, or
- A conventional wall requires a deep foundation and the anticipated settlements of MSE walls are tolerable.

Concrete modular systems are generally more economical when

- The walls are to be constructed in cut situations,
- The average wall height is greater than 8 ft, or
- The wall area is greater than 500 ft^2.

Specific project conditions, as outlined below, may reduce the cost-effectiveness of prefabricated wall systems:

- Availability and high cost of selected backfill,
- Alignment complications requiring many turning points and highly irregular finished grades, and
- Necessity for temporary excavation support systems during construction.

Plan Preparation

When prefabricated walls are permitted as an alternative, the following minimum information should be contained in the bid plans:

- Wall geometry information (alignment, length, profile, elevation, ground profile, cross section showing excavation and backfill, right-of-way limits, high water elevation, and scour protection),
- Wall appurtenance information (traffic barriers, copings, drainage, lighting, utilities, and architectural treatment if warranted),
- Construction sequence requirements (stage construction, traffic controls, and construction specifications),
- Design information (bearing capacity of substrata; external loads due to bridge, sign, or lighting structures; anticipated settlement; and allowable deviations),
- Foundation information (drained angle of internal friction, undrained shear strength and density of the substrata materials, boring logs, and water table), and
- Random backfill information (drained angle of internal friction, cohesive strength, and density).

Also included in the bid plans should be bid quantities and special instructions, and the understanding that the designer will check external stability (overturning, sliding, settlement, overall slope stability, and bearing pressures) based upon estimated base width of 0.7 of the height.

Requirements for Contractor Prepared Plans

The successful bidder should prepare a detailed design and drawings for the wall type selected. The design should include the following minimum requirements:

- Internal and external stability must meet the design parameters outlined in the next section.
- Detailed drawings must show all the data mentioned earlier under Plan Preparation and the information needed to prepare the shop drawings and construct the wall. PennDOT's drafting and detailing standards must be followed (*1*). The design must be developed by a professional engineer registered in Pennsylvania.
- Shop drawing preparation and the submittal requirements must follow PennDOT practices.

OVERVIEW OF DESIGN SPECIFICATIONS

General and Primary Systems

MSE walls

MSE walls, some of which are proprietary, employ either strip or grid-type, metallic, inextensible tensile reinforcements in the soil mass and a discrete modular precast concrete facing, which is vertical or near vertical.

Concrete Modular Systems

Concrete modular systems, some of which are proprietary, generally employ interlocking soil-filled reinforced-concrete modules or bins, which resist earth pressures by acting as gravity retaining walls.

Structure Selection

Technical Considerations and Restrictions

MSE Walls MSE walls may be used where conventional gravity, cantilever, or counterforted concrete retaining walls are considered. They are particularly well suited for those locations in which substantial total and differential settlement is anticipated.

Limiting tolerable gradual differential settlement for systems with panels less than 30 ft^2 in size and a minimum joint width is as follows:

Joint Width (in.)	*Limiting Differential Settlement*
¾	1 in 100 of wall length
½	1 in 200 of wall length
¼	1 in 300 of wall length

When abrupt differential settlement is anticipated (e.g., in the wing walls of culverts and in the culvert itself or in a sudden change of foundation strata), a full-height vertical expansion joint should be incorporated.

The minimum required reinforcing length for both strip and grid reinforcement is 70 percent of the height of the wall. For walls supporting roadways that are deiced with chemicals, an impervious membrane should be placed above the reinforced zone and sloped to a collector drain (Figure 1). For walls constructed in side hill cuts and fill geometries or cuts, a drainage blanket should be constructed to intercept groundwater (Figure 1).

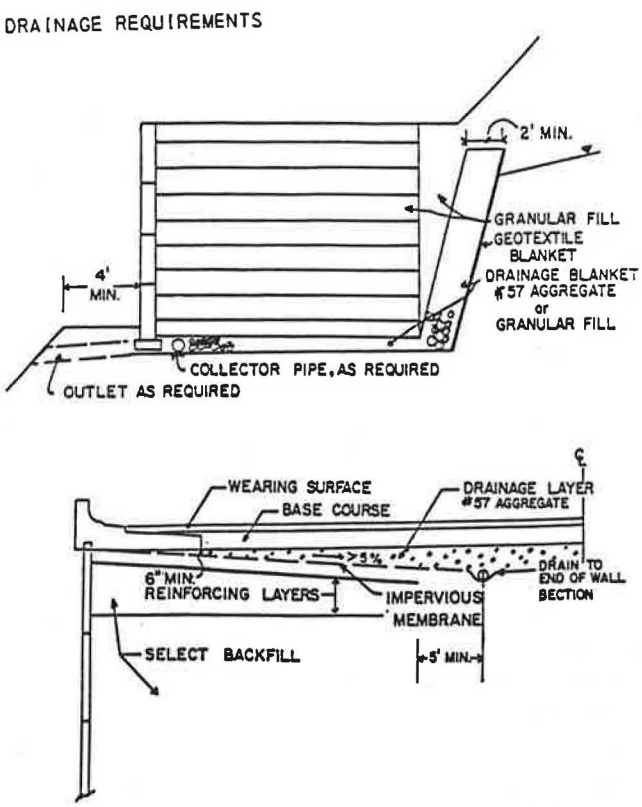

FIGURE 1 Drainage requirements: *top*, drainage blanket detail; *bottom*, impervious barrier detail.

MSE walls should not be used under the following conditions:

- When wall height is greater than 40 ft and mesh reinforcing is used and when wall height is greater than 55 ft and strip reinforcing is used,
- When the groundwater, surface runoff, channel, or stream along the wall is acid contaminated (pH < 6),
- When two intersecting walls form an enclosed angle of 70 degrees or less,
- When utilities other than highway drainage must be constructed within the reinforced zone,
- When differential settlement along the wall is greater than indicated previously in this section,
- When curves have a radius less than 60 ft,
- When floodplain erosion is anticipated to undermine the reinforced fill zone of the wall, or
- When stray ground currents are anticipated within 200 ft of the structure.

Concrete Modular Systems Concrete modular walls are well suited in side-hill cut applications, along stream channels, and where limited space is available to the right-of-way line. When the wall is constructed on fill, the embankment between the original ground and the footing should be composed of granular material or rock.

Concrete Modular Systems should not be used under the following conditions:

- When wall height exceeds 35 ft;
- When the flared wingwalls of abutments are not at 30-degree, 45-degree, or 90-degree angles to the abutment wall or with open-front-face modules;
- When curves have a radius less than 800 ft, unless the curve can be substituted for by a series of chords; or
- When calculated longitudinal differential settlements along the face of the wall are greater than 1 in 200 of the wall length under consideration.

Foundation Submission

The foundation submission report for proprietary walls should include the following:

- Results of all subsurface and laboratory investigations performed to determine allowable bearing pressures;
- Depth of foundations and maximum allowable foundation pressure;
- Necessary foundation improvement techniques, including extent of unsuitable material to be removed;
- Earth pressure coefficients and drainage requirements;
- Systems that will be permitted as alternatives; and
- Maximum estimated settlement during construction and during service life.

The foundation submission is made by the project designer during the design phase of the project.

Design Parameters

Structure Dimensions

All prefabricated walls should be dimensioned to ensure the following factors of safety:

Criterion	*Factor of Safety*
Sliding	>1.5
Overturning on soil	>2.0
Overturning on rock	>1.5
Pullout resistance (MSE walls)	>1.5
wall height ≤ 35 ft	>1.5
wall height > 35 ft	>2.0
Bearing capacity	>3.0
Slope stability	>1.5

Soil reinforcement length should be a minimum of 70 percent of the wall height but not less than 8 ft. For a definition of height for different conditions, see Figures 2 and 3.

Minimum embedment of the wall is as follows:

Slope in Front of Structure	*Minimum Embedment (3-ft min.)*
Horizontal for walls	*H*/20
Horizontal for abutments	*H*/10
3*H*:1*V* for walls	*H*/10
2*H*:1*V* for walls	*H*/7
1.5*H*:1*V* for walls	*H*/5

For walls constructed on slopes, a minimum horizontal bench width of 4 ft width should be provided. For walls constructed along streams, the foundation depth should be established at a minimum of 2 ft below potential scour depth.

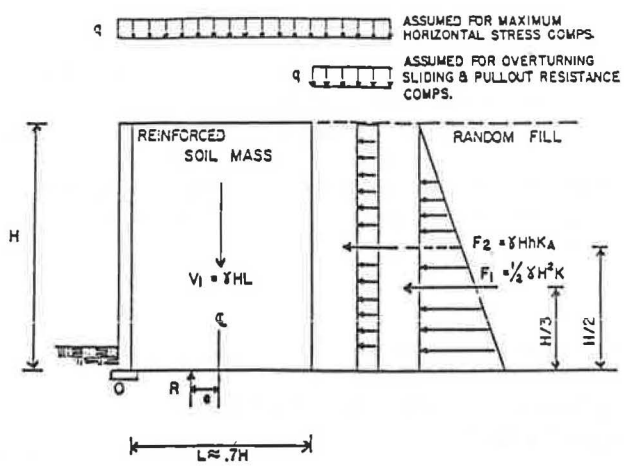

SAFETY FACTOR AGAINST OVERTURNING (MOMENTS ABOUT POINT O):

$$S.F.(O) = \frac{\Sigma \text{ Moments Resisting (Mr)}}{\Sigma \text{ Moments Overturning (Mo)}} = \frac{V_1(L/2)}{F_1(H/3) + F_2(H/2)} \geq 2.0$$

SAFETY FACTOR AGAINST SLIDING:

$$S.F.(S) = \frac{\Sigma \text{ Horizontal Resisting Force(s)}}{\Sigma \text{ Horizontal Driving Force(s)}} = \frac{V_1 \quad \text{Tan}\,\phi}{F_1 + F_2} \geq 1.5$$

ϕ = Friction Angle of Backfill or Foundation, whichever is lowest.

$$e = \frac{L}{2} - \frac{Mr - Mo}{R} \leq \frac{L}{6} \qquad \sigma_v = \frac{R}{L - 2e}$$

where e = eccentricity, q = traffic surcharge, R = resultant of vertical forces V_1, and K_A = see Equation 1

FIGURE 2 Horizontal backslope with traffic surcharge.

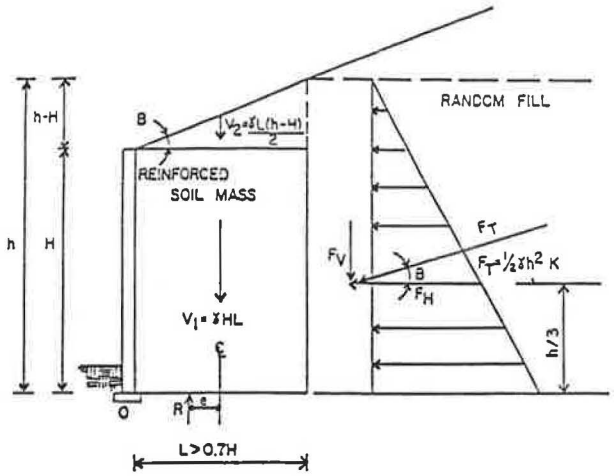

SAFETY FACTOR AGAINST OVERTURNING (MOMENTS ABOUT POINT O):

$$S.F.(O) = \frac{\Sigma \text{ Moments Resisting (Mr)}}{\Sigma \text{ Moments Overturning (Mo)}} = \frac{V_1(L/2) + V_2(2L/3) + F_V(L)}{F_H(h/3)} \geq 2.0$$

SAFETY FACTOR AGAINST SLIDING:

$$S.F.(S) = \frac{\Sigma \text{ Horizontal Resisting Force(s)}}{\Sigma \text{ Horizontal Driving Force(s)}} = \frac{R \text{ Tan}\,\phi}{F_H} \geq 1.5$$

ϕ = Friction Angle of Backfill or Foundation, whichever is lowest.

$$e = \frac{L}{2} - \frac{Mr - Mo}{R} \leq \frac{L}{6} \qquad \sigma_v = \frac{R}{L - 2e}$$

where: e = Eccentricity R = Resultant of vertical forces $V_1 + V_2 + F_V$

FIGURE 3 Sloping backfill case.

External Stability

The external stability of MSE walls should be determined as indicated in Figures 2 and 3. The slope stability should be checked using the Swedish circle or other approved method. See Figure 4 for fill limits.

The coefficient of active earth pressure, K_A, used to compute the horizontal force resulting from random backfill and other factors should be computed on the basis of the friction angle of the random backfill using a Rankine state of stress. Passive pressures should be neglected in stability computations.

$$K_A = \cos B \frac{[\cos B - (\cos^2 B - \cos^2\phi')^{1/2}]}{[\cos B + (\cos^2 B - \cos^2\phi')^{1/2}]} \tag{1}$$

where B is the slope angle above the wall, and ϕ' is the internal angle of friction of the random backfill.

The external stability of Concrete Modular Systems should be checked in a manner similar to that for MSE walls. In addition, the Coulomb theory should be used in determining the lateral earth pressure coefficient. The following wall friction angles, δ, should be used unless more exact coefficients are determined:

Case	δ
Significant vibrations of backfill or modules settling more than backfill	0
Continuous pressure surface of precast concrete (uniform-width modules)	½ϕ
Averaged pressure surface (stepped modules)	¾ϕ

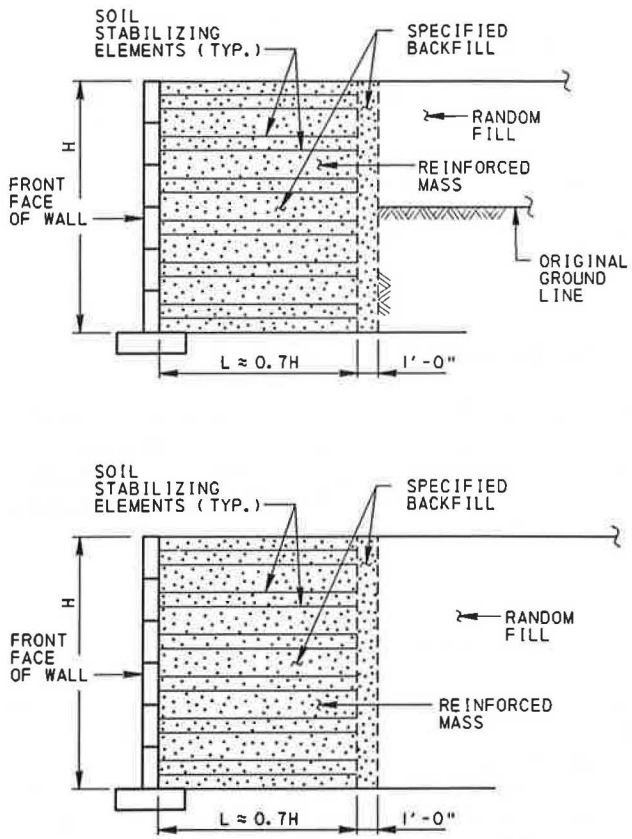

FIGURE 4 Fill limits: *top*, cut-and-fill condition; *bottom*, fill condition.

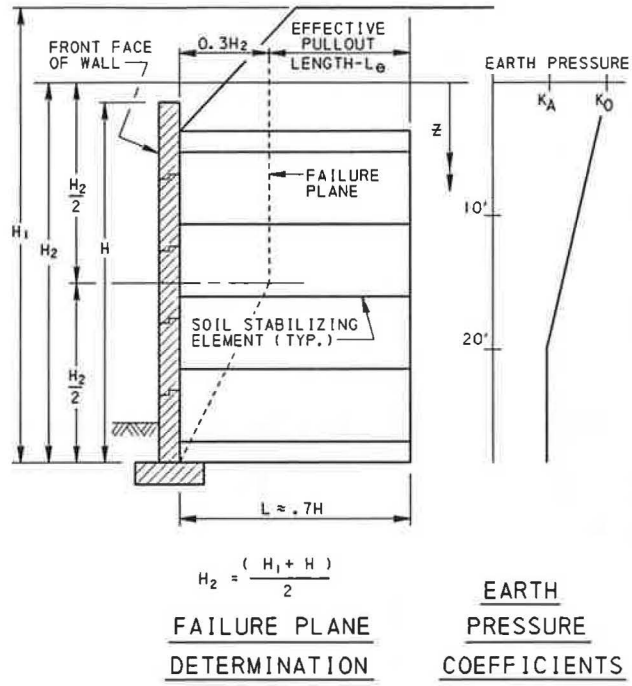

FIGURE 5 Internal stability, MSE walls.

where ϕ is the angle of internal friction of the backfill material behind the wall. Passive pressures should be neglected in stability computations.

Computations for overturning stability should consider that only 80 percent of the soil fill unit weight inside the modules is effective in resisting overturning moments.

Internal Stability

The horizontal stress, σ_H, at each reinforcement level should be computed by multiplying the vertical stress, σ_V, by an earth pressure coefficient, K, shown in Figure 5 where

$$K_A = \tan^2 (45 - \phi/2)$$

$$K_O = 1 - \sin \phi$$

and ϕ is the angle of internal friction of the select backfill.

Pullout Design Parameters

Ultimate pullout capacity of ribbed or smooth steel reinforcing strips is as follows:

$$P_f = f \cdot \gamma \cdot ZA_s \tag{2}$$

where

P_f = pullout capacity per strip,
f = apparent coefficient of friction at each level,
γ = unit weight of soil,
Z = depth to reinforcement, and
A_s = total surface area of reinforcement beyond failure plane.

For ribbed strips, f varies from 1.5 at ground level to the value of tan ϕ at a depth of 20 ft.

For smooth strips, $f = \tan \psi \leq 0.4$, where ψ is the soil reinforcement angle of friction. For fully saturated conditions, site-specific field or laboratory pullout tests should be performed.

For grid reinforcing systems with transverse bar spacing of 6 in. or more,

$$P_p = N_p \cdot Z \cdot \gamma \cdot nA_b \tag{3}$$

where

P_p = ultimate pullout capacity developed by passive resistance per grid,
N_p = passive resistance factor (see Figure 6),
n = number of transverse bearing members behind the failure plane, and
A_b = surface area of transverse reinforcement in bearing (diameter times length).

For grid reinforcements with transverse bar spacing less than 6 in.,

$$P_p = 2 \cdot w \cdot l \cdot \gamma \cdot Z \cdot \tan \phi \cdot f_d \tag{4}$$

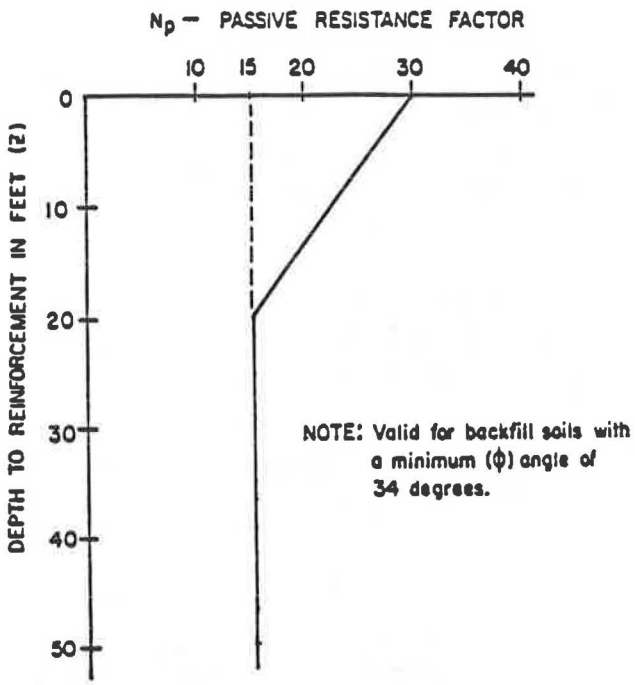

FIGURE 6 Passive resistance factor.

where

w = width of mat,
l = length of mat beyond failure plane,
ϕ = friction angle of soil, and
f_d = coefficient of resistance to direct sliding.

Value varies linearly from 0.45 for continuous sheets to 0.6 for bar mats with transverse spacing of 6 in.

Only the effective pullout length that extends beyond the theoretical failure plane should be used in this computation.

Allowable Stresses and Structural Design

Allowable stresses for MSE walls should be according to AASHTO specifications. For grid reinforcing members, allowable tensile stresses should be reduced to $0.48fy$. Transverse and horizontal grid members should be the same size.

The horizontal force used to design the connections to the panels should not be less than 85 percent of the maximum strip force. However, for structures supporting bridge abutments, full force should be used. The minimum panel thickness should be 5½ in. and the minimum concrete cover should be 1½ in. Epoxy-coated reinforcement bars should be provided where salt spray is anticipated.

Precast Modular Systems should be designed for developed earth pressure behind the wall and for pressure developed inside the modules. The inside pressure (bin) should be the same for each module and less than

$$P_i = \gamma \cdot b \tag{5}$$

where

P_i = inside pressure,
γ = unit weight of soil inside the modules, and
b = width of the module.

Modules should be designed for bending in both vertical and horizontal directions between their supports. Steel reinforcement should be symmetrical on both surfaces unless positive identification of each face can be ensured to preclude reversal of units. Epoxy-coated rebars should be specified when use of deicing chemical sprays is anticipated.

Drainage Requirements

Prefabricated walls in cut areas and side-hill fills with established groundwater levels should be constructed with drainage blankets as shown in Figure 1. For MSE walls supporting roadways that are chemically deiced in the winter, an impervious membrane should be placed as shown in Figure 1.

Design Life Requirements

The soil reinforcement elements in MSE walls should be designed to ensure a minimum design life of 100 years for permanent structures.

The structural design of galvanized soil reinforcements and connections should be made on the basis of a thickness, E_c, defined as follows:

$$E_c = E_n - E_s \tag{6}$$

where E_s is the thickness of metal expected to be lost by uniform corrosion during the service life of the structure, and E_n is the nominal thickness. The sacrificial thickness, E_s, of carbon steel in addition to the galvanization (zinc coating of 2 oz/ft^2) for 100 years is 0.05 in.

Special Design Considerations

Special Loading Conditions

Concentrated line loads should be incorporated into the internal design by using a simplified uniform vertical distribution of 2 vertical to 1 horizontal. Traffic loads should be considered in accordance with AASHTO requirements.

In pile-supported abutments constructed on MSE walls, the horizontal forces transmitted to the piles should be resisted by their own lateral capacity or by additional reinforcement in the upper portion of the structure. A minimum clear distance of 1.5 ft should be provided between the facing and the piles. Piles should be driven before wall construction and cased through the fill if necessary. Piles should have corrosion protection in the reinforced zone.

For structures along streams, a differential hydrostatic pressure equal to 3 ft of water should be considered. Buoyant unit weight should be used in the internal and external stability calculations. Seismic design need not be considered unless the acceleration coefficient is greater than 0.1.

Design Details

Parapets should be provided according to PennDOT criteria. When flexible posts and barriers are provided, the upper two rows of reinforcement should be designed for an additional horizontal load of 300 lb/lin ft of wall.

ACKNOWLEDGMENTS

This paper is a condensed version of the Prefabricated Walls portion of the DM-4 (*1*) developed by Victor Elias under the direction of Stephen R. Simco and the authors. The proprietary wall industry's contribution in critiquing the specifications is appreciated. These specifications have been approved by FHWA for use in Pennsylvania. The critique by FHWA is also appreciated.

REFERENCE

1. *Design Manual, Part 4* (DM-4), Volume 1, Parts A and B. Pennsylvania Department of Transportation, Harrisburg, 1988.