Mobile System for Measuring the Retroreflectance of Traffic Signs

JOHN J. LUMIA

A practical system is needed to evaluate the nighttime visibility of existing signs and provide data for making decisions about sign replacement or refurbishment. Laboratory methods and portable instruments are available for measuring the retroreflectance of traffic signs, but easy-to-use mobile systems are not. Research is currently under way to develop a system that can measure the average retroreflectance of sign legend and background, irrespective of color, size, and placement, and that can be operated during daylight from a moving vehicle. Based on the use of a charge-coupled device video camera to acquire sign images, a xenon flash as a source of light, and a portable personal computer to analyze the images, experiments and analyses indicate that such a system is feasible, is well suited for making measurements from a moving vehicle, and can be built from commercially available components.

This paper discusses a device used for measuring traffic sign retroreflectance from a moving vehicle during daylight hours. Average values of both legend and background retroreflectance, in units of candelas per footcandle per square foot (commonly defined as R'), are sought. Accurate measurements depend on the angle between the source and detector, and this is generally not fixed for realistic situations. Signs may be of differing colors, shapes, sizes, and placement. The finished system should be simple and not pose a danger to the operator or other motorists.

The basic concept for the measurement of average legend and background retroreflection is the use of a video camera to record the sign, with an electronic flash source providing a short burst of light bright enough to overcome the sign luminance caused by ambient daylight illumination. The video camera signal is then converted to a digitally sampled representation of the sign. Using the power of computer image processing, histograms of the retroreflected intensity distribution can be used to yield average legend and background values. In a moving system, a laser range finder provides an accurate means of monitoring the distance from the vehicle to the sign.

BACKGROUND

A number of sources describe systems for single-spot measurement of signs in situ (*1–3*). The systems described for measurement during daylight hours generally define phase-lock detection techniques, which are not readily applied to the large number of point measurements required to distinguish legend from background averages, particularly in a moving environment (*2,3*). Other references describe the effects of source and detector sizes on measurement accuracy (*4*), as well as the photometric properties of retroreflective sign materials as a function of lighting geometry (*5*). Additional sources contain reports of average luminance measurements of sign materials during daylight hours, along with typical average sky luminance readings (*6*). Certain standards and methods were also included in this study and consulted regularly to ensure that the design concept was consistent with conventional methods (Federal Test Method Standard 370 (*7*), ASTM E808-81, ASTM E809-81, ASTM E810-81, ASTM E811-81, FP-85 (*8*), and AASHTO M268-84).

A retroreflector is a device that turns light back toward its source, generally over a wide range of input angles. Signs are typically comprised of either retroreflective sheeting or glass beads mounted directly on the face of the sign. The design of this system has been based on retroreflective sheeting. Three types are commonly used for highway signs: enclosed glass beads, encapsulated glass beads, and cube-corner prismatic elements (see Figure 1). Each of these materials has different retroreflective properties, which will be demonstrated later.

This design requires the measurement of the coefficient of retroreflection (R') with the desired units in candelas per footcandle per square foot. This can be expressed as

$$R' = \frac{I}{E_n A} \tag{1}$$

where E_n is the normal illumination incident on the retroreflector, A is the area of the surface to be measured, and I is the reflected intensity (*9*). With manipulation of these parameters, the retroreflectance can be regarded as the absolute brightness of the retroreflective target for a given amount of incident illumination on the target. Arithmetically, this can be expressed as

$$R' = \frac{L}{E_n} \tag{2}$$

where L is the luminance of the reflected light. Figure 2 shows the commonly accepted geometry and definitions as prescribed by ASTM E808-81 for evaluating retroreflective materials.

The incident illumination is generally measured using an illuminance meter located at the target and facing the direction of light. A more realistic approach for a mobile system is to use the inverse-square law to infer the illumination from the source intensity, or

$$E = I/d^2$$

EKTRON Applied Imaging, 23 Crosby Drive, Bedford, Mass. 01730.

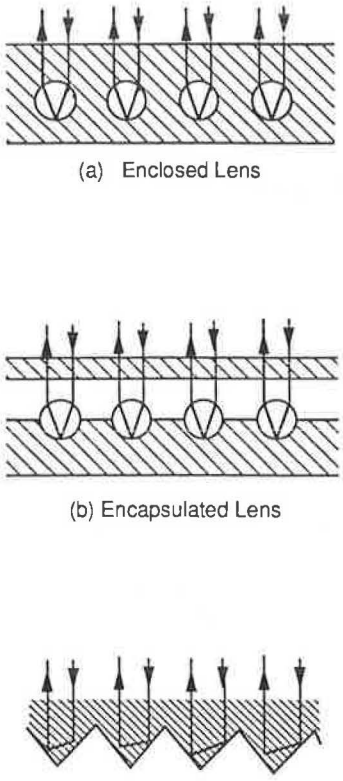

FIGURE 1 Common retroreflective materials.

where I is the intensity and d is the distance from the source to the detector (assuming that the source behaves as if it were a point). The intensity can be calibrated from laboratory measurements, while the distance can be measured using an appropriate laser ranging device. The reflected luminance can be measured with a luminance meter, which is similar to an illuminance meter except that the field of view (FOV) of the detector must be limited to a sufficiently small angle. The use of a video camera effectively divides the FOV defined by the system magnification into smaller FOVs, thereby creating individual luminance meters at each sensing element site. Video is a practical way of obtaining a large number of samples suitable for measuring average legend and background retroreflectances.

The video system takes advantage of the contrast that typically exists between legend and background, anticipating a "bimodal histogram." That is, the contrast difference allows the use of hardware or simple software algorithms to group areas of similar intensity, which usually correspond to legend and background. When the system is properly calibrated, the average value of each group corresponds to the average luminance. If the illumination is known, the retroreflectance can be readily obtained.

This is illustrated in the histogram plots of video imagery from an actual sign (shown in Figure 3). This sign image was digitized under outdoor conditions and illuminated directly using a slide projector. The histogram of the sign area is shown in Figure 4, plotted as relative number of image points versus reflected light intensity. The double peaks in the histogram correspond to the legend and background intensities.

RESEARCH APPROACH

In this phase of the program, the critical factors involved in each of the key technology areas identified in the research proposal were studied:

- The use of a video camera to acquire a large number of sign samples,
- An electronic flash to provide sufficient amounts of light to overcome ambient sign luminance,
- Range measurement using a laser range finder to obtain distance to the sign, and
- Image analysis to evaluate the video image for average legend and background retroreflectance.

These concepts are summarized in Figure 5, in which a proposed system configuration is presented. A number of analytical studies were conducted in conjunction with labo-

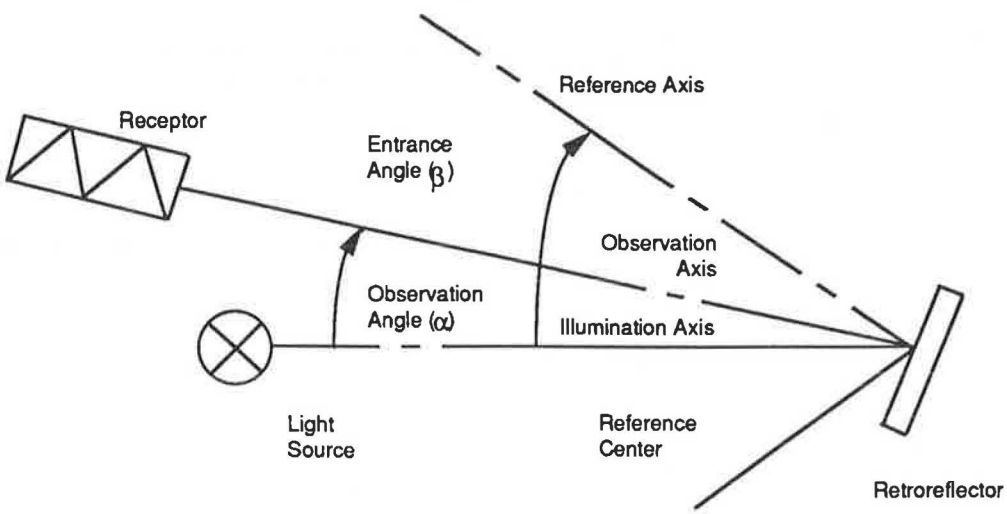

FIGURE 2 Plan view of testing configuration showing observation and entrance angles.

FIGURE 3 Image of typical traffic sign with black legend on white background.

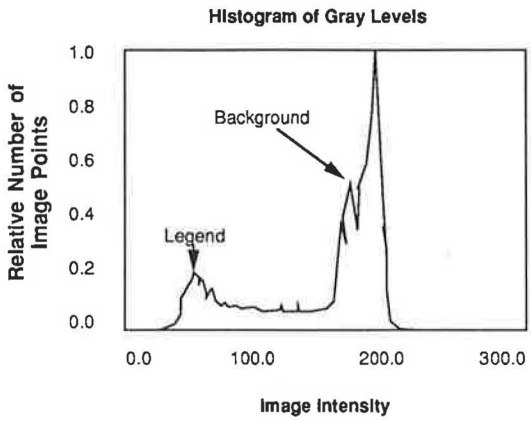

FIGURE 4 Related histogram of image in Figure 3.

ratory and field experiments. The results of these studies were then used to determine the required performance of each of the system components for use in the breadboard system.

The universal research tool for the laboratory and field studies was an IBM-compatible Compaq portable personal computer. Software was compiled to digitize video camera images and generate histograms of all or part of the resulting data.

Ambient Illumination Effects

Since daylight measurements were required, it was necessary to either eliminate the effect of ambient illumination or reduce the effect to a point where it became tolerable with the desired accuracy of the measuring system. Retroreflective effectiveness is relevant over small observation angles, and published measurements typically give data to about 2°. However, retroreflective materials exhibit a small but appreciable coefficient of retroreflection at large observation angles. For instance, the R' for enclosed-lens white materials is typically 100 to 120 at a 0.2° observation angle ($-4°$ entrance angle) but generally levels off to a value of approximately 0.3 at angles beyond 20°. Ambient illumination levels can be quite high, approaching 10,000 fc for combined sun and clear sky, effectively offsetting the low R' value at large angles.

To determine the effect of ambient illumination on sign luminance, samples of white enclosed, encapsulated, and cube-corner materials were measured at various sun elevation angles. Measurements of sample luminance were taken with the plane of the material oriented vertically, but always in a direction facing the sun. The results are plotted in Figure 6. The data indicate that, at any given angle, the enclosed-lens white material has the maximum luminance, followed by the cube-corner and encapsulated materials. Also, the graph indicates that the sample luminance decreases with increasing solar elevation angle and exhibits a minimum as the sun approaches maximum elevation. Below 20°, the rate of change increases more rapidly. This should be expected since the sun is creating a smaller observation angle with respect to the detector. To minimize illumination requirements, it may be necessary to limit the measurement window to times when the sun is above a minimum elevation. Using a value of 20°, the ambient sign luminance is 2,500 cd/ft^2 for enclosed materials, 2,100 cd/ft^2 for encapsulated materials, and 2,300 cd/ft^2 for cube-corner (white) materials.

Additional data taken on an overcast day indicated a maximum sign luminance of 170, 140, and 204 cd/ft^2 for enclosed, encapsulated, and cube-corner materials, respectively. These values are much lower than the range of values recorded for full sunlight. Additionally, maximum sky luminance values of 825 cd/ft^2 for an overcast sky and 1,600 cd/ft^2 for a clear sky (near the horizon) were recorded. These are also lower than the sign luminance values for clear conditions. Thus, worst-case illumination requirements can be based on the clear sky data presented above.

Measurement Geometry

Geometry is an important factor to consider when designing a system for measuring sign retroreflectivity under moving conditions. The geometries of concern are observation angle, entrance angle, and source/detector aperture size. In a system designed for in situ measurements, achieving a specific measurement geometry is straightforward. In a moving system, the geometric relationship between source, sign, and detector is constantly changing. This is important because all retroreflective devices do not behave the same as the geometry is changed.

A number of sources give the typical behavior of enclosed, encapsulated, and cube-corner retroreflective materials as a function of observation angle (*4,5*). Figure 7 shows the results of one study (*4*). These materials are highly directional upon retroreflection, with cube-corner materials the most highly directional, followed by encapsulated and enclosed materials. More important, from a measurement standpoint, the rates of change of these materials are significantly different, with cube-corner having the highest rate of change in the vicinity of a 0.2° observation angle, followed by encapsulated and enclosed-lens materials.

Assuming a fixed source-detector separation, the observation angle increases with decreasing distance to the sign. Realistically, the material of the sign will probably not be known, so, unless the angle is kept constant for all situations, it will be nearly impossible to relate the measured value to a commonly measured observation angle (such as 0.2°). To maintain sufficient accuracy, there is a "distance window" in

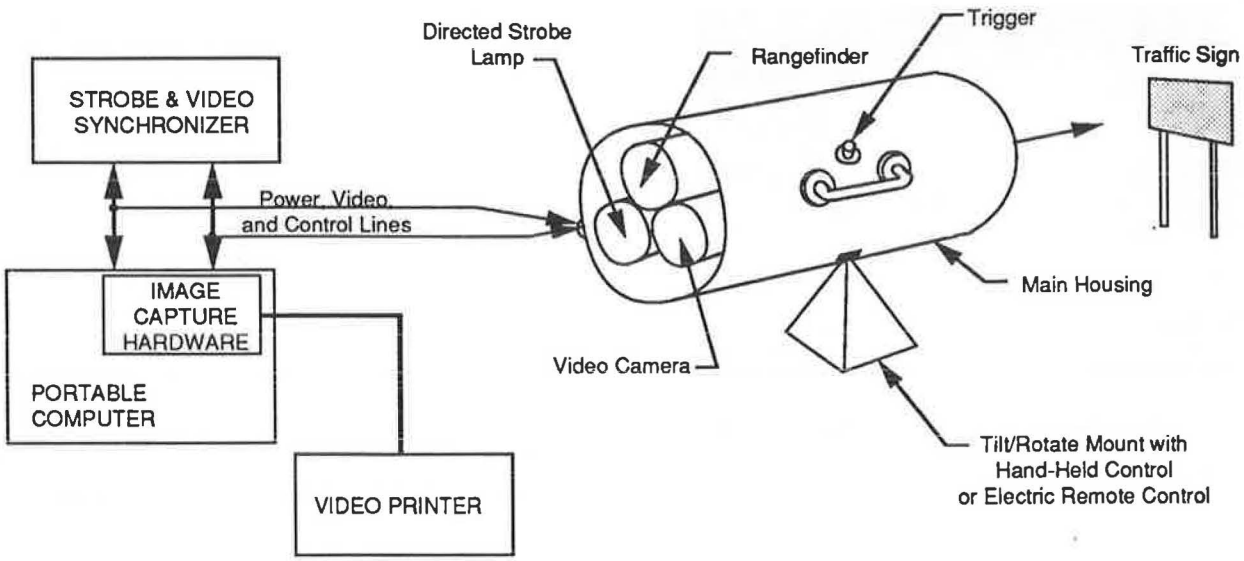

FIGURE 5 Conceptual illustration of the basic components of the proposed MSMRTS system.

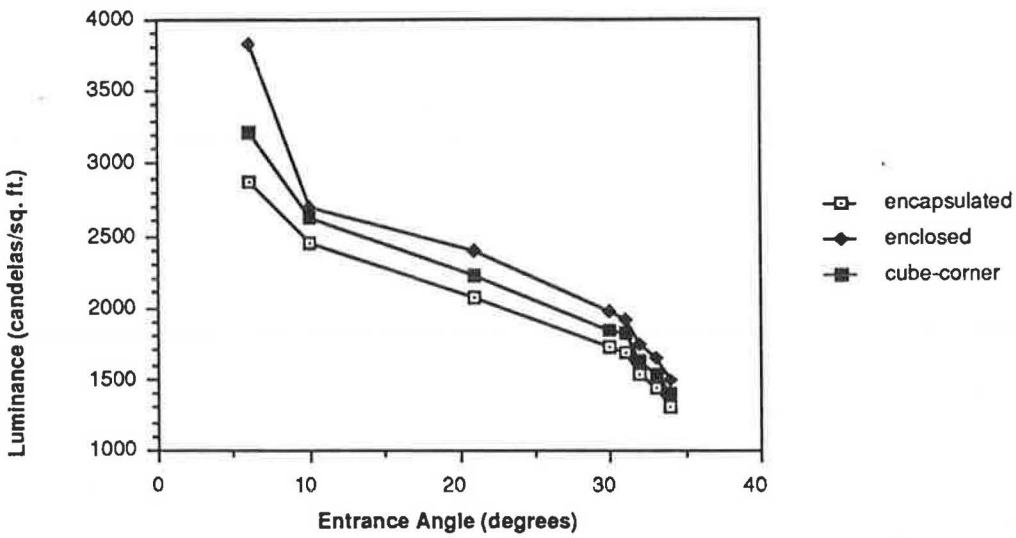

FIGURE 6 Sign luminance versus solar elevation for enclosed, encapsulated, and cube-corner materials (white).

which the measurements need to be taken, assuming a fixed source-detector separation. The size of this window may be influenced by the degree of collimation of the illumination system. If the illumination system is highly collimated, then the incident illumination at the sign will remain nearly constant with changes in distance, possibly requiring a relatively short distance window. For a completely uncollimated beam (point source), the illumination will vary inversely as the square of the distance. This will tend to compensate for the effect of the observation angle, resulting in the reflected sign luminance remaining constant over a longer distance.

The results of another study indicate that the effect of entrance angle is far less severe (*5*). In Figure 8, the reflected intensity falls by a worst-case approximation of 1 percent per degree to about 20° for cube-corner materials. In moving situations, it would be very difficult to measure this angle. It has been suggested that the video image be used to examine the perspective distortion of the sign image so an estimate of the entrance angle can be obtained, but this function would most likely require operator intervention and seriously limit data collection. However, the entrance angle of most signs at appreciable distances will be small, minimizing this effect. Since this angle will be the same for a measurement as for the driver, it will not be considered in the measurement system.

Range Finder Accuracy

The use of a laser range finder is proposed to obtain sign distance information. The particular system under consideration uses a time-of-flight (TOF) method where short pulses of laser light, supplied by a laser diode, are sent out to the

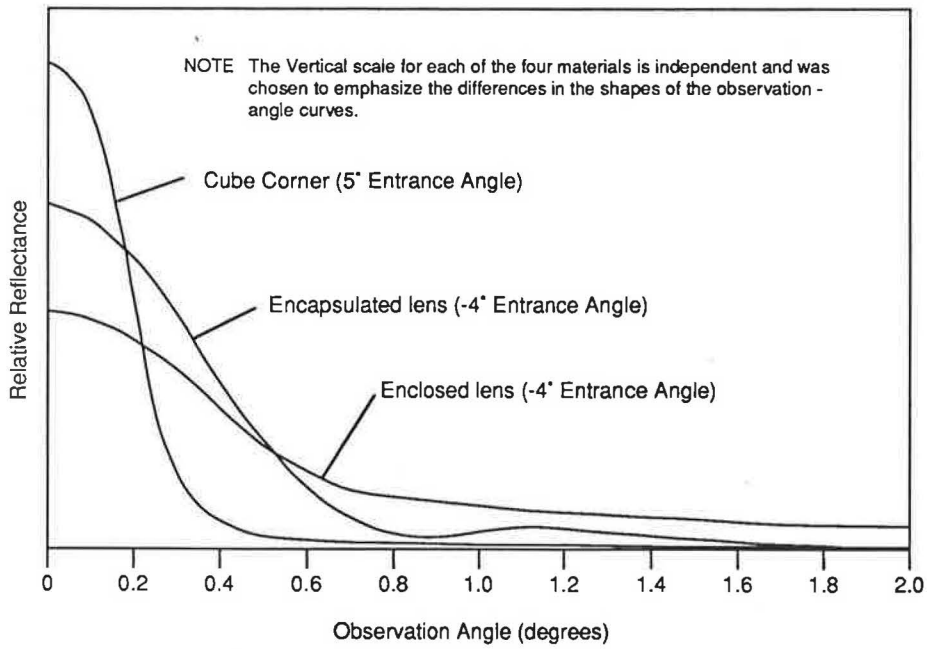

FIGURE 7 Relative retroreflectance versus observation angle (*4*).

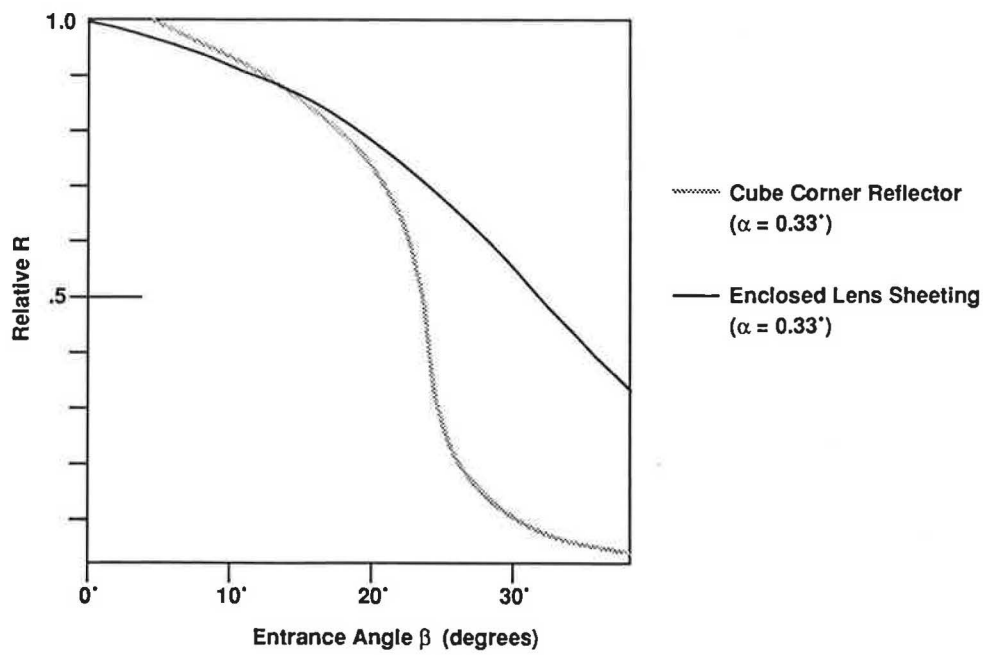

FIGURE 8 Relative retroreflectance versus entrance angle (*5*).

target. By measuring the time it takes to receive the returned pulse, and knowing the speed of light, the total round-trip distance can be calculated. This value is divided by two to obtain the actual distance to the target. One commercially available device has a sampling rate of 2,000 samples/sec. The unit can average a number of samples to obtain an accurate distance reading. The number of samples per reading is called the repetition rate. The data rate of the interface used to transfer the distance information limits the effective data transfer to approximately 133 readings/sec, or 15 samples/reading, with a net estimated accuracy of ± 0.27 ft under stationary conditions.

Under moving conditions, the distance at which a reading is obtained represents an average value of the measured distance samples taken during the reading interval. This results in a systematic error of approximately half the distance traveled during this time. At a constant speed of 55 mph (81 ft/sec), and at 133 readings/sec, the resulting distance resolution is 0.60 ft/reading, with a systematic error of 0.30 ft. Coupled with the stationary sampling accuracy of the unit, the net

distance accuracy would be 0.30 ft, ±0.27 ft. This results in a worst-case error of 0.3 percent at a 200-ft range and 0.6 percent at a 100-ft range. This should have a minimal effect on the resulting calculation of sign illumination from light source intensity.

Intensity Requirements

For a uniform retroreflective target possessing a given luminance due to ambient illumination, the light source must provide an adequate amount of additional exposure above the ambient signal so that the retroreflection caused by the illumination system can be detected and isolated. This additional exposure factor can be denoted by a constant K. The value of K determines the capability of the system to reject the sign luminance caused by ambient illumination. For example, a value of 20 implies a 20:1 ratio of artificial to ambient signal; hence, the measured data will have a 5 percent maximum error due to the presence of an ambient signal. The value of K could be as high as the signal-to-noise ratio of the camera, typically 200:1 for charge-coupled device (CCD) cameras, but the additional demands required of the illumination system may not be realistic.

For electronic flash sources, the intensity is not constant over the duration of the flash. For this reason, it is customary to specify flash intensity in terms of an integrated value, denoted by (It_f). The "intensity exposure" required to produce the necessary detection can be expressed as

$$(It_f) = \frac{K\, L_{amb}\, t_{cam}\, d^2}{R'} \qquad (\text{for } t_f < t_{cam}) \tag{3}$$

where

L_{amb} = maximum ambient sign luminance for a given material,
t_{cam} = camera exposure time,
t_f = flash lamp duration,
d = distance to sign, and
R' = coefficient of retroreflection for a given material.

The units for (It_f) are in candela-seconds (cd-sec). To operate effectively with all materials, (It_f) should be based on the retroreflective material (generally enclosed, encapsulated, or cube-corner sheeting) that produces the worst case, or largest value, of (It_f). Equation 3 shows that (It_f) is greatest when L_{amb} is large and R' is small. This occurs with the enclosed-lens material. L_{amb} was chosen to be 2,500 cd/ft², based on the white enclosed-lens material (see Figure 6). Furthermore, to obtain accuracy over a reasonable range of retroreflection, the value of R' was chosen to be the minimum recommended value corresponding to the enclosed white material, or 70 cd/fc/ft². Figure 9 shows the required exposure plotted against K and t_{cam}, based on a 200-ft target distance. Assuming a K value of 20 and a camera exposure time of 1 msec, the required value of flash exposure is 28,500 cd-sec, as long as the flash duration is less than the camera exposure time. From Equation 3, flash exposure is directly proportional to K, indicating that system accuracy will be sacrificed if the required quantity of light is not available.

Electronic Flash

The advantage of the electronic flash is that large quantities of light are produced over short periods of time. Figure 10 shows an intensity profile for a typical flashlamp. For maximum efficiency, the flash duration should be less than or equal to the exposure time of the camera. For camera applications, flash duration is commonly defined as the time between the two points on the intensity-time curve that are at 10 percent of the peak intensity.

As Equation 3 indicates, exposure requirements are minimized when t_{cam} is reduced. However, the flash exposure (t_f) must be reduced as well. It would, therefore, seem desirable

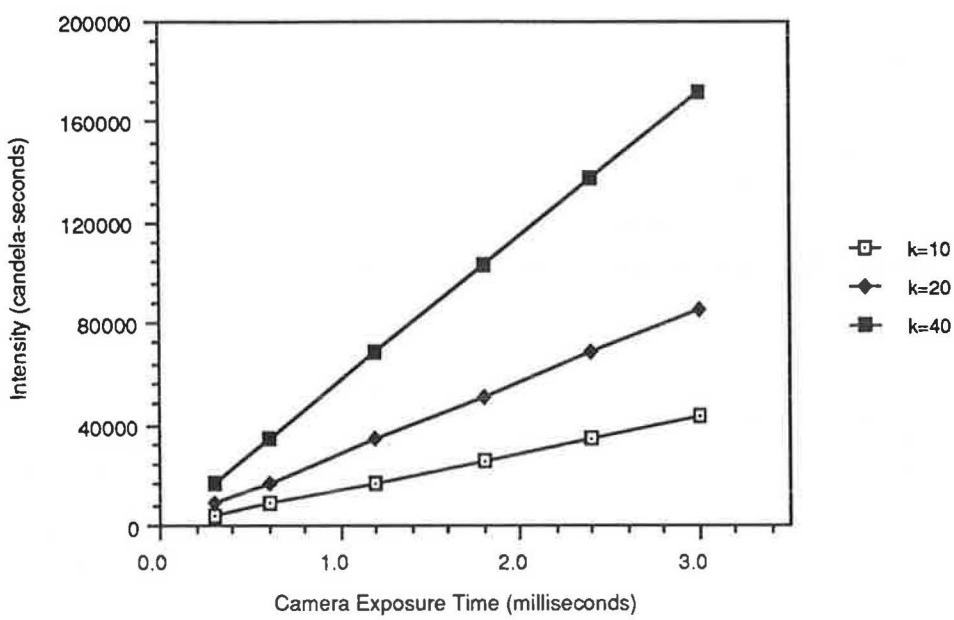

FIGURE 9 Exposure versus K and t_{cam}.

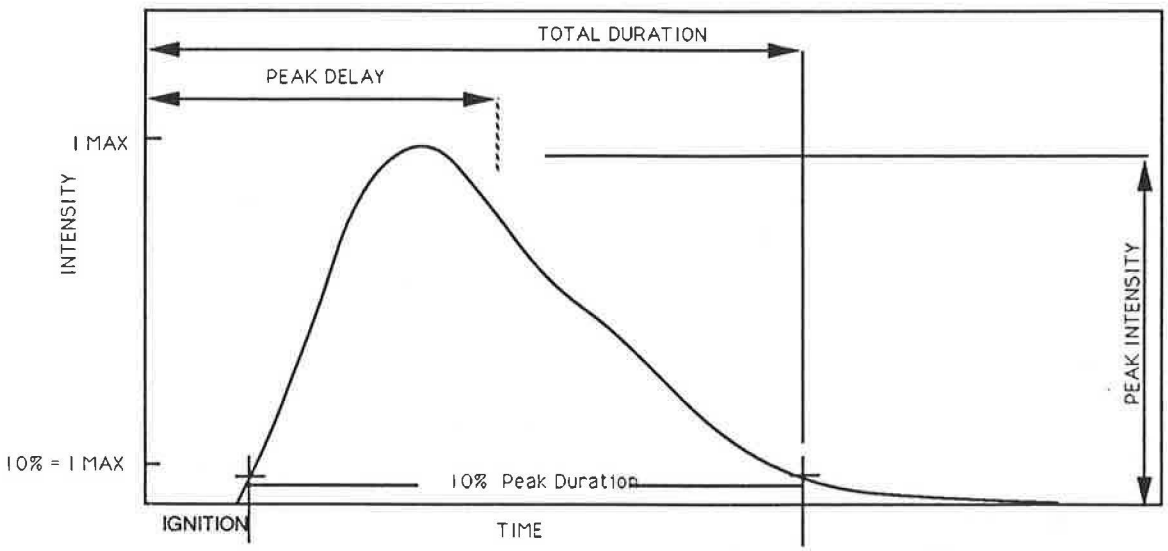

FIGURE 10 Typical intensity-time profile of an electronic flash lamp.

to reduce t_{cam} as much as possible, but there is an optimum flash duration in which light output efficiency is maximized for a given flashtube design. The necessity for an appreciable quantity of light for this application will require long flash durations (estimated to be from 0.1 to 1 msec) but, in moving situations, the duration needs to be short enough to "freeze" the effects of image motion due to vibration. Actual exposure time requirements to compensate for vibration are not yet known. This may depend on the characteristics of the vehicle in which the camera is mounted. If the 1-msec time described above is not adequate to freeze the motion, the electronic flash can be optimized to operate at shorter durations. The distance covered during the 1-msec flash duration is calculated to be 1 in. at 55 mph and is expected to have little effect on the image.

One major manufacturer of electronic flash systems offers a commercially available unit for use as an obstruction warning light on tall towers and smokestacks. This system has a duration of approximately 1 msec in the high intensity mode and produces 40,000 cd-sec, nearly 40 percent greater than the 28,500 value described above. The spectral quality of electronic flash units is categorized in the daylight region of the spectrum, with typical color temperatures ranging from 5,000°K to 7,500°K, depending primarily on fill gas, pressure, and energy loading. The spectral power distribution of the typical xenon flashlamp ("high energy linear xenon") is shown in Figure 11. The output is nominally continuous, with a few spikes that may adversely affect color measurement accuracy. The unit uses a long linear flashtube in a trough-type reflector having a parabolic cross section and yielding a long, but nar-

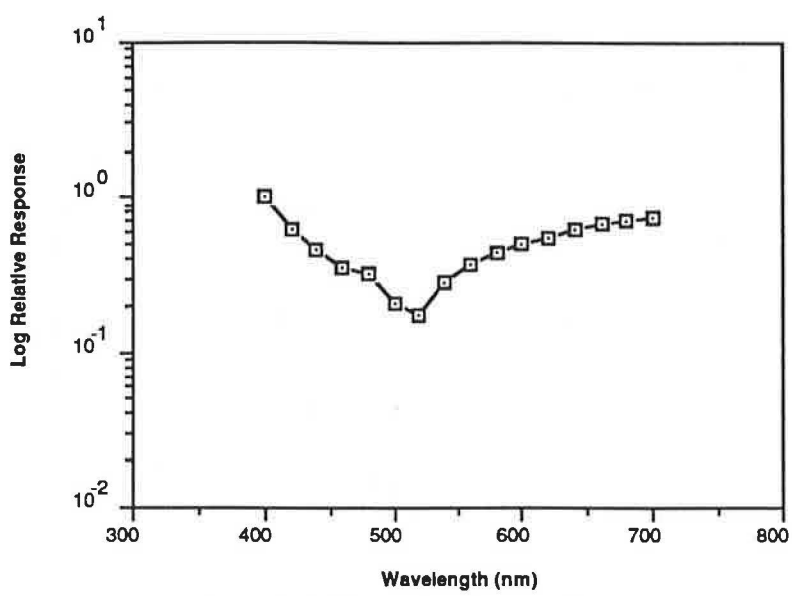

FIGURE 11 Spectral distribution of xenon flash.

row, beam profile (see Figure 12). In the more critical vertical direction, the total beam spread defined at the 90 percent points is approximately 2°.

COMPONENT SELECTION

Based on the operational requirements presented above, a preliminary selection of components was made. These are categorized as follows:

- Digital frame capture,
- Directed strobe,
- Range measurement, and
- Digital conversion/image analysis.

Digital Frame Capture

To satisfy the exposure requirements of this system, the use of a shuttered camera is recommended. An electronically shuttered camera having a 1/1,000 sec duration is commercially available. The camera uses a CCD area array measuring 8.8 mm × 6.6 mm (an aspect ratio of 1.33:1) with 491(H) × 384(V) pixels, a signal-to-noise ratio of 46 db (200:1), a sensitivity of 40 fc incident on a diffuse white target using a lens aperture of f/4.0, and a source color temperature of 3,200°K (with infrared cutoff filter). The camera has an automatic gain control (AGC) that can be disabled, which is desirable for this application. Additionally, the camera is RS-170 compatible, outputting two interlaced video fields (termed odd and even) in 1/60 sec, for a total frame time of 1/30 sec. The camera measures 5.5 in. × 2.5 in. × 3 in.

To facilitate synchronization of the camera to the flash unit, the camera has an output that indicates the vertical blanking signal. Also, the camera has an output port for a video CRT viewfinder. A color conversion filter to correct the spectral distribution of the flash to 2,856°K, and a filter to correct the camera response to a photopic behavior, will be attached to the front of the lens.

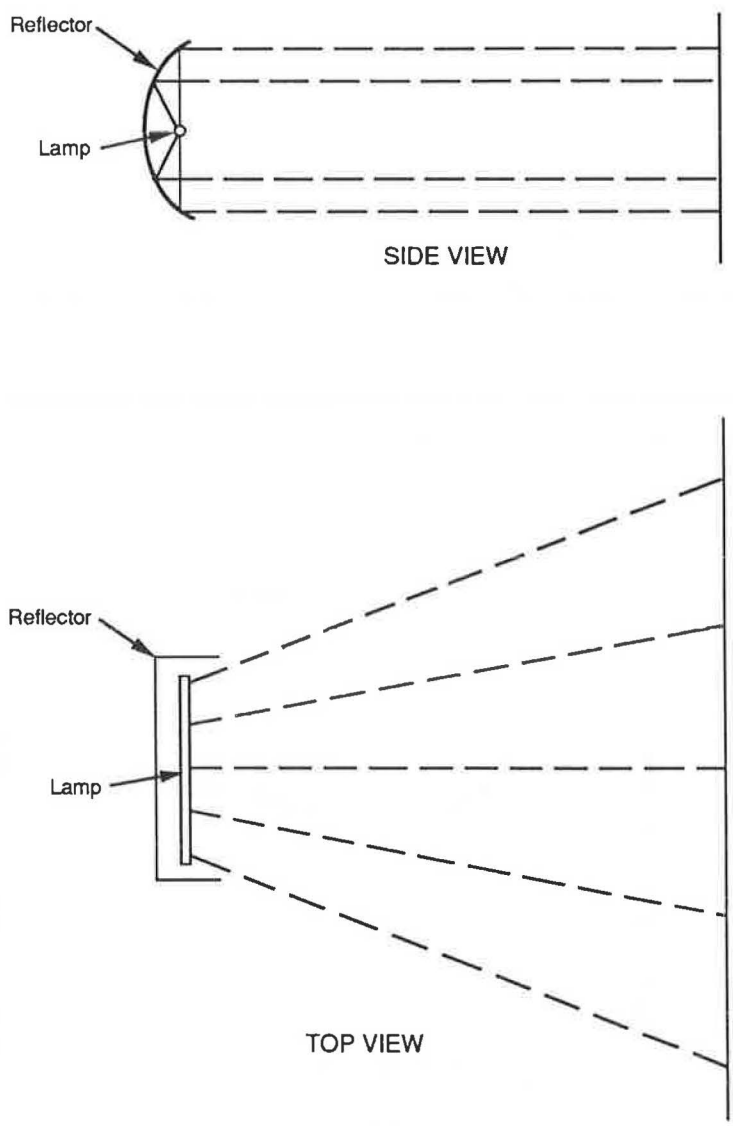

FIGURE 12 Top and side view of parabolic trough reflector demonstrating beam profile characteristics.

Directed Strobe

As discussed previously, a commercially available strobe unit is proposed. The reflector, lamp, and trigger transformer will be isolated from the power supply and fitted into a separate enclosure. The input to the supply is 120 VAC and draws 500 watts. Flash-to-flash variability is estimated to be within 5 percent. Production designs could include a flash monitor to mitigate this effect, if warranted.

Range Measurement

The proposed laser range finder is reported to be eye-safe and is expected to meet FDA approval. The device measures approximately 8 in. × 5 in. × 4 in. and weighs approximately 2 lb. Also included is an RS-232 port to trigger the device and transmit range data.

Digital Conversion/Image Analysis

A personal computer will be the essential link between the video camera, strobe, and range finder units. The computer used in this phase of the program will be one of a number of portable systems available commercially. This system will have a standard RS-232 port, which will be used to communicate to the range finder, a parallel port for a printer, and two floppy disk drives. A frame-grabber card will be installed to sample the analog signal from the camera, convert the signal to digital values, and store the data in memory on the board. This creates a digitized image of the desired video frame. Additionally, an output port is available to facilitate storage of the image on a video tape recorder.

Vertical blanking pulses are constantly sent by the camera so that a strobe triggered directly from this signal would flash constantly. A means of generating the strobe trigger only for the desired frame is required. To accomplish this, a strobe-video synchronizer circuit will be custom-built to monitor the status of the vertical blanking signal on the frame grabber (which is synchronous with the camera) immediately after the operator depresses a switch, and then fire the flash. A computer keyboard switch will be used for these experiments, and a trigger signal for the strobe will be issued at the computer's parallel port.

SYSTEM CONFIGURATION

The proposed breadboard components will be integrated as shown in Figure 13. This block diagram shows the location of the camera, electronic flash, range finder, and personal computer. Figure 14 shows a conceptual drawing of the optical head. The flash module, consisting of lamp and reflector, will be mounted above the camera and can be positioned at the height needed to obtain the correct observation angle for a given distance. For a 0.2° observation angle at 100 ft, the required separation from the camera centerline to the center of the reflector is 4 in. A bracket will secure both the camera and flash head as a unit. The power supply for the flash unit will be remotely located.

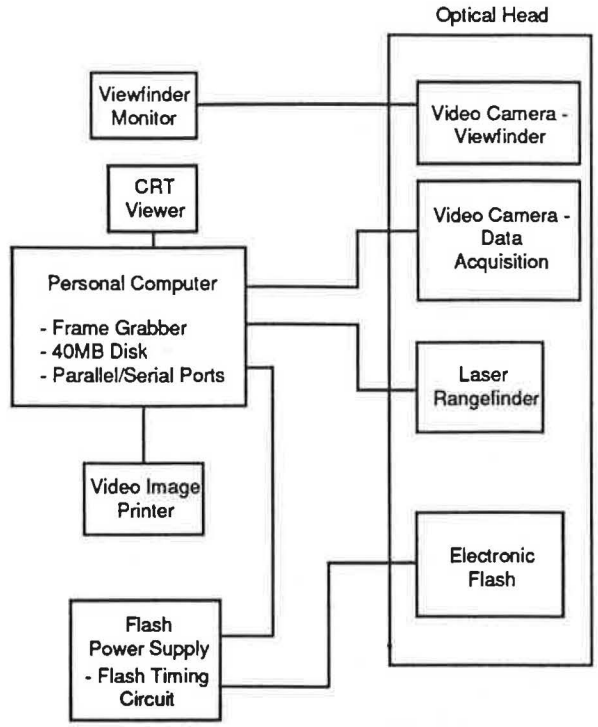

FIGURE 13 Diagram of proposed MSMRTS breadboard.

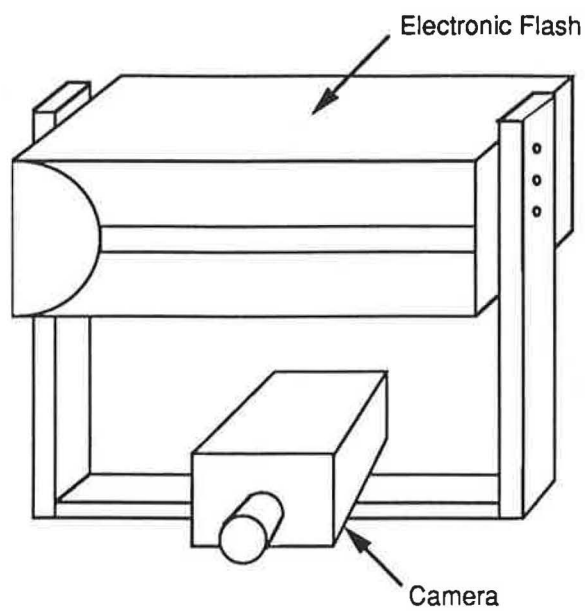

FIGURE 14 Optical head concept for MSMRTS breadboard.

SYSTEM ACCURACY

The results of this investigation generally indicate worst-case errors for the variables identified. These are summarized as follows:

Variable	*Error (%)*
Measurement geometry	
Observation angle	1–2
Entrance angle	Up to 10

Variable	*Error (%)*
Camera resolution	5
Ambient signal	5
Electronic flash	
Output variability	±2.5
Illumination uniformity	0

Because these are worst-case errors, the average error will be much less than their sum. A more realistic assessment of measurement errors will be available by using the breadboard system to measure a large number of signs, then comparing that data with measurements made using traditional methods.

CONCLUSIONS

The research and analysis presented in this paper indicate that an accurate mobile system for measuring the average retroreflectance of traffic signs during daylight hours is feasible. The conceptual design of the system is well suited for making measurements from a moving vehicle. The suggested components for this application are commercially available, minimizing the need for an extensive engineering effort.

The highest value of sign luminance due to ambient daylight conditions occurs with enclosed-lens sheeting. Under direct sunlight, the sign luminance is lowest when the sun elevation is highest and increases as the sun approaches the axis of the camera. If measurements are made when the sun is above an elevation angle of 20°, a realistic balance between required artificial source illumination and operational limitations can be achieved.

Under moving conditions, the angular geometry between the source, sign, and detector is constantly changing. The behavior of sign retroreflectance is highly sensitive to the angle between the source and detector (observation angle), and this behavior is markedly different among the types of materials currently available. If accurate measurements are to be made with respect to a given angular geometry, a fixed measurement distance is required.

The entrance angle (the angle between the illumination axis and the normal to the sign) has a minimal effect on measurement accuracy if this angle is small. This is expected to be the case if a sufficiently long measurement distance is used. Therefore, the entrance angle will not be measured.

Accurate distance measurements are required to determine the observation angle and infer the illumination at the sign with as little error as possible. Investigation into the use of a laser range finder indicates that a maximum distance measurement error of 0.3 percent at 200 ft and 0.6 percent at 100 ft is possible at a speed of 55 mph.

The intensity requirements of the electronic flash system are based on the amount of exposure needed to adequately exceed ambient sign luminance. For a maximum error of 5 percent, a flash intensity of 28,500 cd-sec is required for a camera exposure time of 1 msec. This maximum error is calculated for enclosed-lens materials that have deteriorated to minimum recommended values of retroreflectance. A commercially made electronic flash unit is available that produces 40,000 cd-sec for a duration of 1 msec and has a life expectancy of 100,000,000 flashes.

A system of components for creating a breadboard system is proposed. The components selected for the system are commercially available, thereby minimizing engineering costs. The breadboard consists of a compact camera, flash head unit, and range finder connected to a personal computer. The flash power supply will be remotely located. Additionally, a CRT viewfinder will be used to monitor and aim the system.

ACKNOWLEDGMENT

This work was sponsored by NCHRP.

REFERENCES

1. G. J. Malasheskie and F. W. O'Block. *Field Evaluation of the Gamma Scientific Model 910B Retroreflectometer*. Research Project 77-16. Pennsylvania Department of Transportation, 1978.
2. W. E. Webb and J. E. Dudgeon. *A Reflectance Measuring System for Field Use*. Project 930-036. Alabama State Highway Department, 1977.
3. T. Williams. *Reflectivity Instrumentation Design*. Project 737-01-73. Louisiana Department of Highways, 1974.
4. N. L. Johnson, Accuracy in the Photometry of Retroreflectors. *Proc., Society of Photo-Optical Instrumentation Engineers*, Vol. 196, 1979, pp. 136–146.
5. W. H. Venable, H. F. Stephenson, and H. Terstiege. Factors Affecting the Accuracy of Retroreflecting Materials. *Applied Optics*, Vol. 19, 1980, pp. 1242–1246.
6. W. P. Youngblood and H. L. Woltman. A Brightness Inventory of Contemporary Signing Materials for Guide Signs. Presented at 40th Annual Meeting of the Highway Research Board, Washington, D.C., 1961, pp. 69–91.
7. *Instrumental Photometric Measurements of Retroreflective Materials and Devices*. Federal Test Method Standard 370. General Services Administration, Washington, D.C., 1977.
8. *Standard Specification for Construction of Roads and Bridges on Federal Highway Projects*. U.S. Federal Specification FP-85. FHWA, U.S. Department of Transportation, 1979.
9. F. Grum and R. J. Bacherer. *Optical Radiation Measurements: Volume I—Radiometry*, Chapter 3. Academic Press, New York, 1979.