Signs on Breakaway Barricades—Wind and Crash Tests

THOMAS D. DAVIS

Work zone informational sign panels are often mounted on portable wood or metal frames and used for changing traffic operations in New Jersey work zones. At times, these portable signs are placed close to Type III breakaway barricades used to channelize traffic. If signs could be placed on the barricades instead, some portable wood or metal sign frames would no longer be needed. This would reduce sign costs as well. Barricades with signs attached at various heights for visibility purposes were tested for durability under wind loads up to 60 mph in accordance with criteria established by AASHTO. Twenty- and 60-mph full-scale vehicle crash tests were conducted in compliance with criteria established by AASHTO and *NCHRP Report 230*. Only lightweight signs were attached to the barricades in the tests to eliminate doubt concerning the damage that standard-weight signs might cause. The 12-in.-clearance, 0.024-in.-thick aluminum sign failed the 60-mph crash test. However, vinyl roll-up signs with 21, 38, and 50 in. of clearance from the bottom of the sign to the pavement and 0.024-in.-thick aluminum signs with 29 and 41 in. of clearance passed the wind and crash tests and are recommended for implementation.

Work zone informational sign panels are often mounted on portable wood or metal frames and used for changing traffic operations in New Jersey work zones. At times, these portable diamond-shaped signs are placed close to barricades used to channelize traffic. If signs could be placed on the breakaway barricades instead, the practice of using portable wood or metal sign frames could be abandoned. This would reduce the number of hazardous objects near traffic. This subject is timely because most work zone accidents are collisions with hazardous objects (*1*). The sign expenses would be reduced as well.

The barricades used to channelize traffic are called Type III breakaway barricades. They have three lightweight horizontal panels with orange and white stripes. The barricades are made of unglued 3-in.-diameter polyvinyl chloride (PVC) pipe and have been shown to cause minimal damage to vehicles on impact (*2,3*). In order to eliminate doubt concerning causes of damage from the tests, only lightweight signs were attached to the barricades.

The *Manual on Uniform Traffic Control Devices* (*4*) allows work zone signs on barricades as long as the bottom of the sign is at least 1 ft above the pavement, although higher mounting is desirable. Efforts were made to attach the 4-ft-square sign panels as high as possible to provide good visibility to drivers, and the barricades were modified to support the signs at higher positions.

An initial search of the Transportation Research Information Service on-line computer files found no abstracts relevant to signs on Type III breakaway barricades. A second search on the broader subject of temporary or portable barricades or barriers with breakaway or frangible features found 130 abstracts. No information was found relative to testing of portable small sign supports, including signs on Type III breakaway barricades. A search of related information sources yielded only one untested prototype Type III breakaway barricade sign support, which was developed by the Ponca City, Oklahoma, Traffic Engineering Department.

The barricades with attached signs were to continue to function in a manner consistent with standard PVC Type III breakaway barricades when subjected to wind stress as specified by AASHTO (*5*) and vehicle impacts in compliance with criteria established by AASHTO (*5*) and *NCHRP Report 230* (*6*).

To select an adequate barricade-supported sign device, the following procedures were used:

1. Preliminary wind load tests using the back of a moving truck,
2. Intermediate wind load tests using a jet exhaust wind tunnel,
3. Final wind load tests using the back of a moving truck,
4. Preliminary in-house crash tests at low speeds, and
5. High-speed crash tests by a contractor.

The sign height was varied during the tests, and modifications were made as necessary. The design that passed the tests will be installed and monitored in an actual work zone.

DESCRIPTION OF BARRICADES AND SIGNS

Type III breakaway barricades were used to support the necessary sign panels. The barricades have three 9-in. × 48-in., 0.024-in.-thick aluminum horizontal panels with orange and white stripes. The panels are attached to 3-in. unglued PVC pipe, Schedule 40 ASTM 1785-74 or SDR-26 ASTM 2241-74. The initial design used two spring-tensioned wires from the top to the far bottom of the barricade to keep the barricade from vibrating apart. To restrain the top section of the barricade from striking car windshields on impact, a No. 6, 3/16-in.-diameter solid braided nylon rope was tied inside the vertical portion of the barricade. For ballast, 300 lb of sand was used.

The diamond-shaped signs were 4 ft long on each side and made of either vinyl or 0.024-in.-thick aluminum. The vinyl sign was supplied with a fiberglass cross that provided rigidity; the cross was attached to the barricade with two 1-in. No. 14 panhead screws through the horizontal fiberglass cross mem-

Bureau of Transportation Systems Research, New Jersey Department of Transportation, 1035 Parkway Avenue, Trenton, N.J. 08625.

ber. The aluminum sign was attached to the barricade with four 1-in. No. 14 panhead screws.

WIND TESTS—PHASE 1

Method

On October 2, 1986, a flatbed stake truck was used to test the effects of wind on the experimental sign on barricade devices (Figure 1). The signs were placed on the tailgate to minimize the effects of the truck cab. The signs with 1 ft of clearance from the bottom of the sign to the pavement were attached to standard Type III breakaway barricades; the 5-ft-clearance signs were attached to barricades extended upward; the 7-ft-clearance sign was attached to a barricade with an extended height and an extended base (Figure 2). To pass this preliminary screening, the signs and barricades were to keep their integrity as the truck accelerated. The goal was 60 mph, but the truck reached a maximum speed of only 50 mph because of the shortness of the test track. Each model was tested for wind stress into and behind the sign by reversing the orientation of the sign.

Results

Table 1 outlines the results of the Phase 1 truck tests. There were no problems with the 1-ft-clearance signs. However,

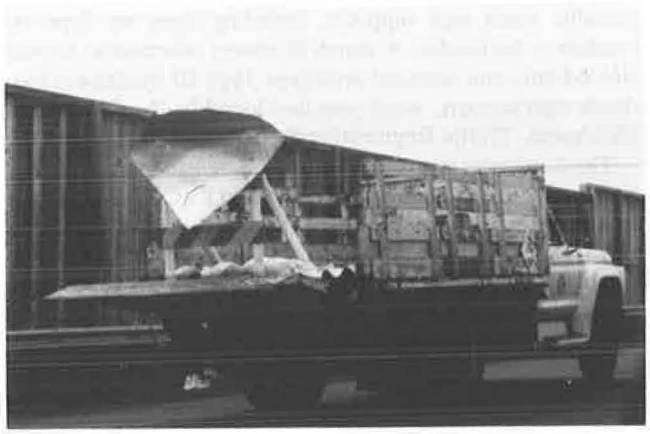

FIGURE 1 Phase 1 wind test with 1-ft-clearance aluminum sign at 50 mph.

FIGURE 2 Phase 1 wind test with 7-ft-clearance vinyl sign at 45 mph.

TABLE 1 RESULTS OF PHASE 1 WIND TESTS

Test Number	Sign Materials	Sign Clearance (ft.)	Ballast (lbs.)	Wind Direction	Results*
1	aluminum	1	300	behind sign	pass
2	aluminum	1	300	into sign	pass
3	vinyl	1	300	behind sign	pass
4	vinyl	1	300	into sign	pass
5	aluminum	5	600	behind sign	fail, 45 mph
6	aluminum	5	600	into sign	fail, 40 mph
7	vinyl	5	600	behind sign	fail, 40 mph
8	vinyl	5	600	into sign	pass
9	vinyl	7	600	behind sign	fail, 45 mph
10	vinyl	7	600	into sign	fail, 45 mph

* To pass, the sign and barricade were to keep their integrity when subject to a wind load of 50 mph.

TABLE 2 RESULTS OF PHASE 2 WIND TESTS

Test Number	Sign Materials	Sign Clearance (ft.)	Ballast (lbs.)	Wind Direction	Results*
1	vinyl	1	300	behind sign	pass
2	vinyl	1	300	into sign	pass
3	aluminum	5	300	behind sign	pass
4	aluminum	5	300	into sign	fail, 40 mph
5	vinyl	5	300	behind sign	pass
6	vinyl	5	300	into sign	pass
7	aluminum	7	300	into sign	fail, 46 mph

* To pass, the sign and barricade were to keep their integrity when subjected to a wind load of 60 mph.

both aluminum and vinyl 5-ft-clearance and the vinyl 7-ft-clearance signs failed when the top extension broke free from the barricade. The 0.024-in.-thick aluminum sign flexed in the wind, but it straightened out after the test.

At this point the 5-ft- and 7-ft-clearance sign frames were modified. The 5-ft-clearance sign frame was extended both vertically and horizontally, and the 7-ft-clearance sign frame was designed so that guy wires with springs would accept most of the wind load. These new designs were evaluated in the next wind test.

WIND TESTS—PHASE 2

Method

On October 27, 1986, the 1-ft-clearance models and the modified 5-ft- and 7-ft-clearance models were tested at the Federal Aviation Administration Technical Center jet exhaust wind tunnel facility in Atlantic City, New Jersey. According to AASHTO (5), "Roadside sign structures that are considered to have a relatively short life expectancy may be designed using wind speeds based on a 10-year mean recurrence interval." For New Jersey, the wind speed for a 10-year mean recurrence interval is 60 mph. Thus the sign and support structures would have to keep their integrity under a 60-mph wind load to pass the wind tunnel test. Whereas the 1-, 5-, and 7-ft models were tested in both directions, only the 5-ft model was tested with both the aluminum and the vinyl signs. Phase 1 showed little difference between the aluminum and vinyl signs with the same clearance.

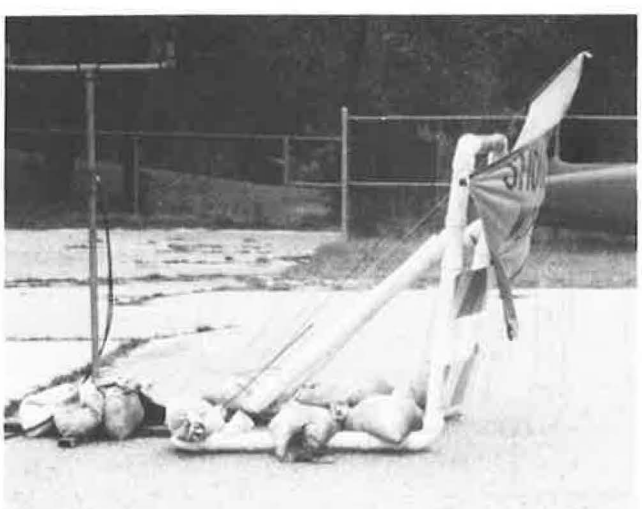

FIGURE 3 Phase 2 wind test with 1-ft-clearance vinyl sign at 69 mph.

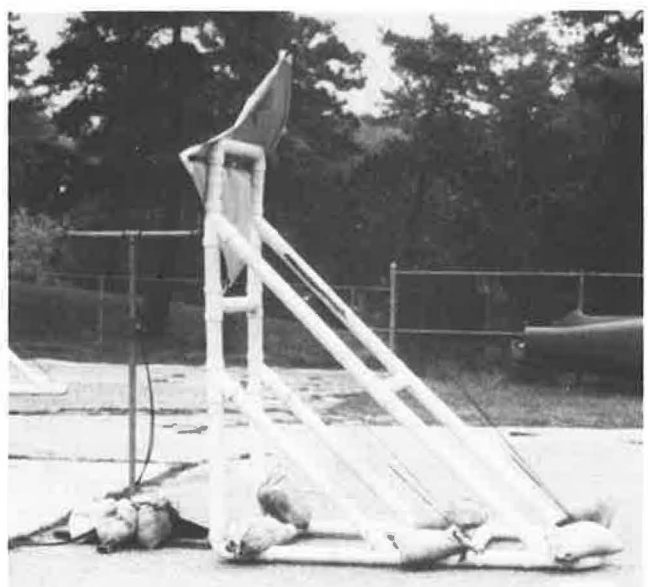

FIGURE 4 Phase 2 wind test with 5-ft-clearance vinyl sign at 63 mph.

Results

As Table 2 shows, the 1-ft-clearance vinyl sign passed this wind test as well (Figure 3). Whereas the 5-ft-clearance vinyl sign endured the test (Figure 4), the aluminum sign failed when the frame separated with the wind into the sign. The 7-ft-clearance aluminum sign frame failed when the top Y fitting fractured (Figure 5).

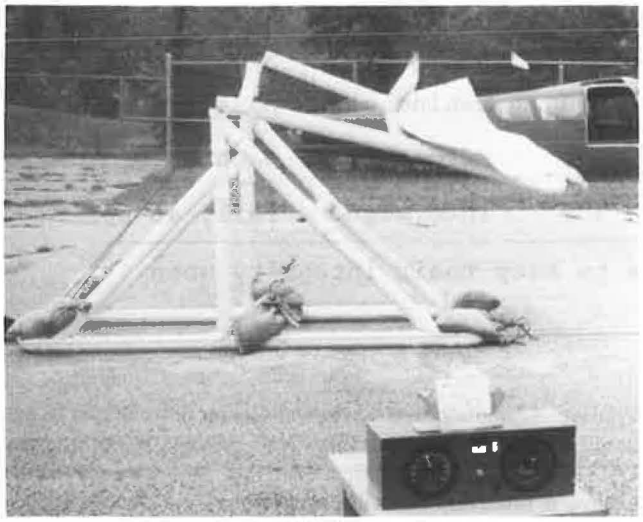

FIGURE 5 Phase 2 wind test with 7-ft-clearance aluminum sign at 46 mph.

Based on the results of the wind tunnel tests, additional changes were made to make the sign frames more durable. The springs that provided tension for the wires used on the standard barricade were removed because they allowed too much flexing under wind loads. The springs were also judged to be hazardous because they tended to come loose and become projectiles when adjusted by workers. The wires were pulled tight to provide tension. The aluminum sign clearances were reduced to 12, 29, and 41 in., and the vinyl sign clearances were reduced to 21, 38, and 50 in. The 29- and 38-in.-clearance signs were attached to barricades extended up 1 ft, and the 41- and 50-in.-clearance signs were attached to barricades extended up 2 ft. The vinyl signs were 9 in. higher than the aluminum signs because the vinyl signs had their own support systems. See Figures 6 through 11 for details.

WIND TESTS—PHASE 3

Method

The new signs on barricade structures were placed on a flatbed stake truck that reached 60 mph. As usual, the signs were tested with the wind behind the sign and into the sign.

Results

All of the redesigned signs on barricade structures passed this final wind test (Table 3). The signs were now ready for the preliminary crash tests.

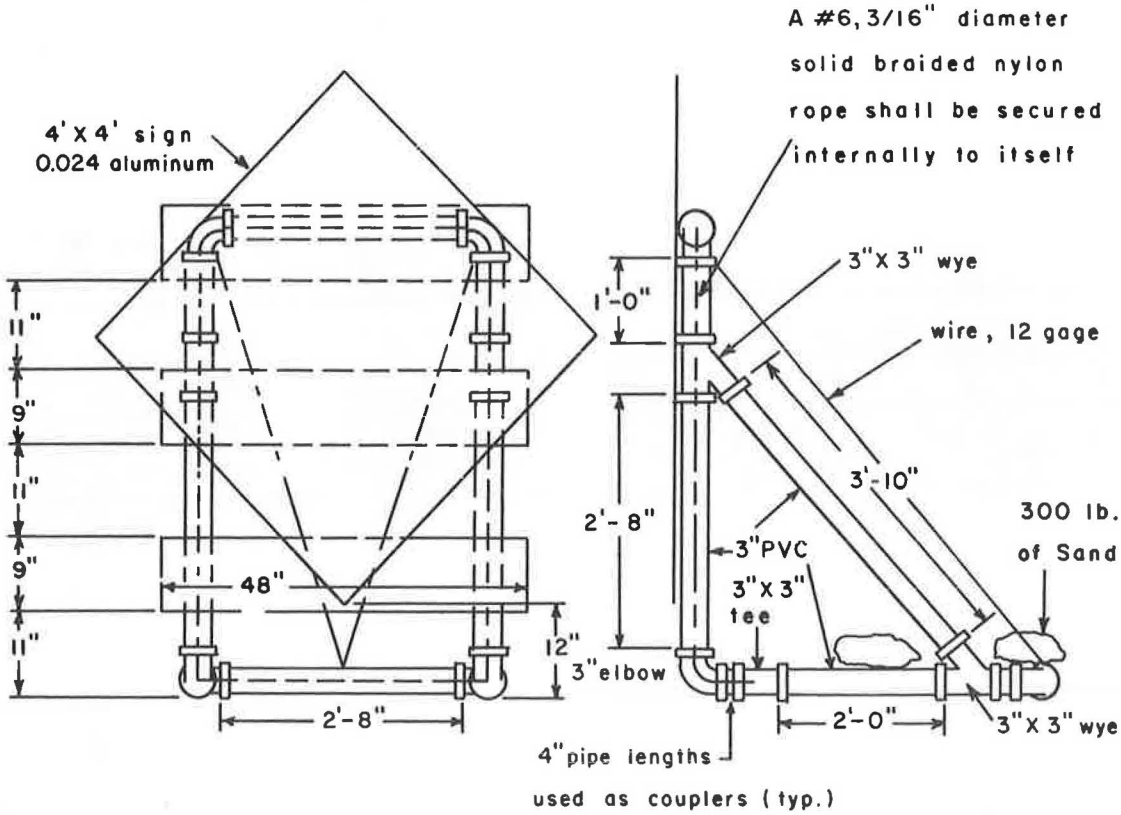

FIGURE 6 Aluminum sign on barricade with 12 in. of clearance.

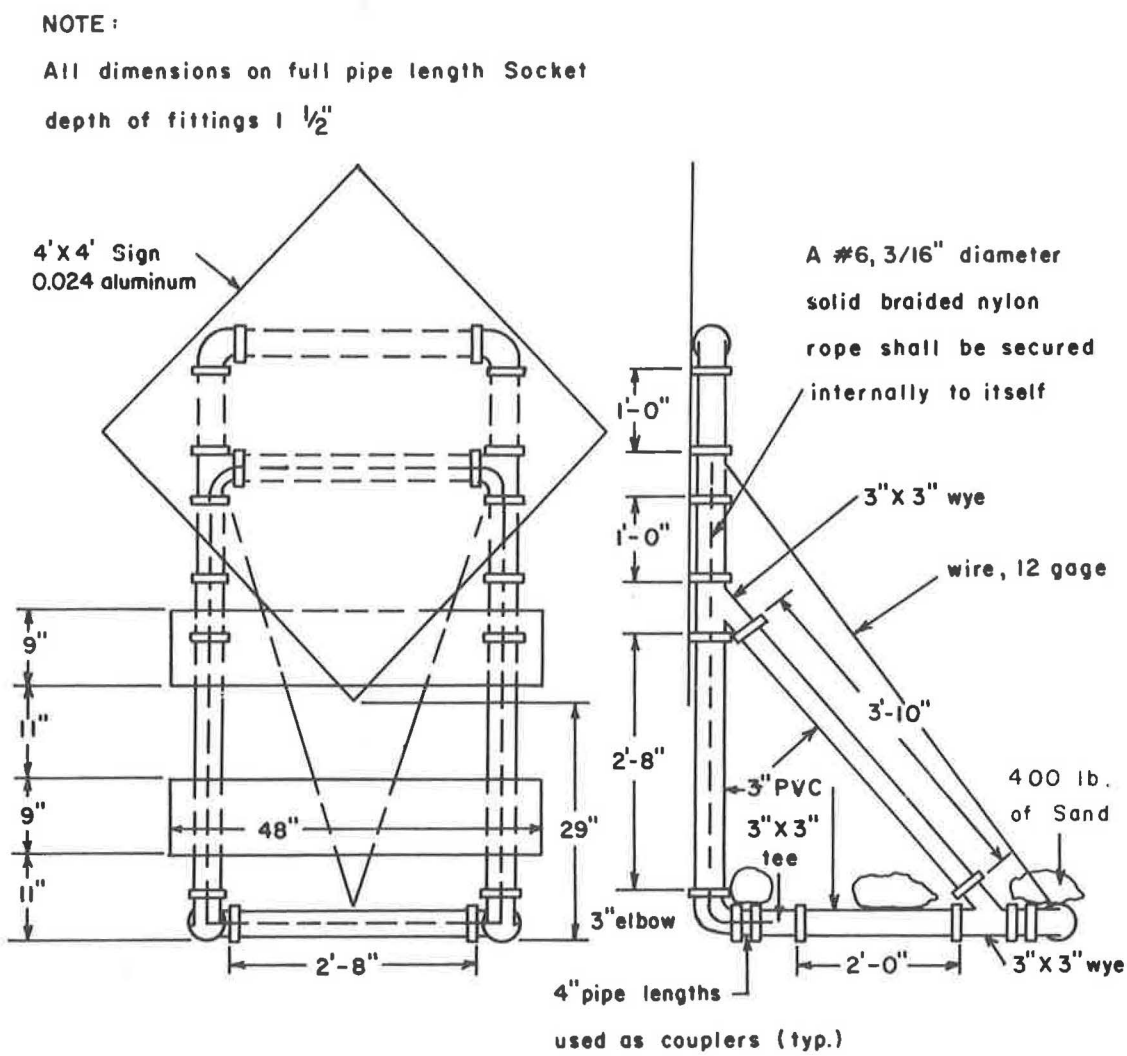

FIGURE 7 Aluminum sign on barricade with 29 in. of clearance.

PRELIMINARY CRASH TESTS

Method

On July 15, 1987, the barricades with attached signs were crash-tested to determine their effects on vehicles and nearby workers. An unoccupied Plymouth Horizon was used to crash into the signs at 25 mph, the highest speed possible under the test track conditions. A W-beam guardrail 150 ft in length was used to guide the vehicle to the sign, and a truck was used to push the car down the track (Figure 12). Once the car reached 25 mph, the truck driver braked and the car continued into the sign (Figure 13). After the collision, the car was stopped with a remotely controlled hydraulic brake. The tests were documented with two video cameras and one 35-mm camera. One video camera was positioned to view the entire site, and the other video camera recorded the impact. The preliminary test was done in-house and was designed to eliminate unsafe models before final testing by a contractor.

Results

As Table 4 shows, the six crashes, with the exception of one, did only cosmetic damage to the car (Figure 14). However, the 41-in.-clearance aluminum sign damaged the windshield (Figure 15). The right post was hit and the upper right section of the barricade structure shattered the windshield. In this case, the internal rope failed to hold the vertical portion of the barricade together, permitting the debris to hit the windshield. The internal rope was used in the standard barricade to keep the top portion of the barricade away from the windshield.

To minimize this problem, 12-gauge wire was specified and the sign panel was attached above to the top T fitting. In this way the sign and frame should separate above the T fitting and clear the top of the vehicle. The internal rope should keep the rest of the frame away from the windshield. The signs did not become missiles to harm other drivers or nearby workers in any of the tests. The sign either stayed with the vehicle or landed a few feet from the impact site. With these minor adjustments, the signs were ready for the final crash tests.

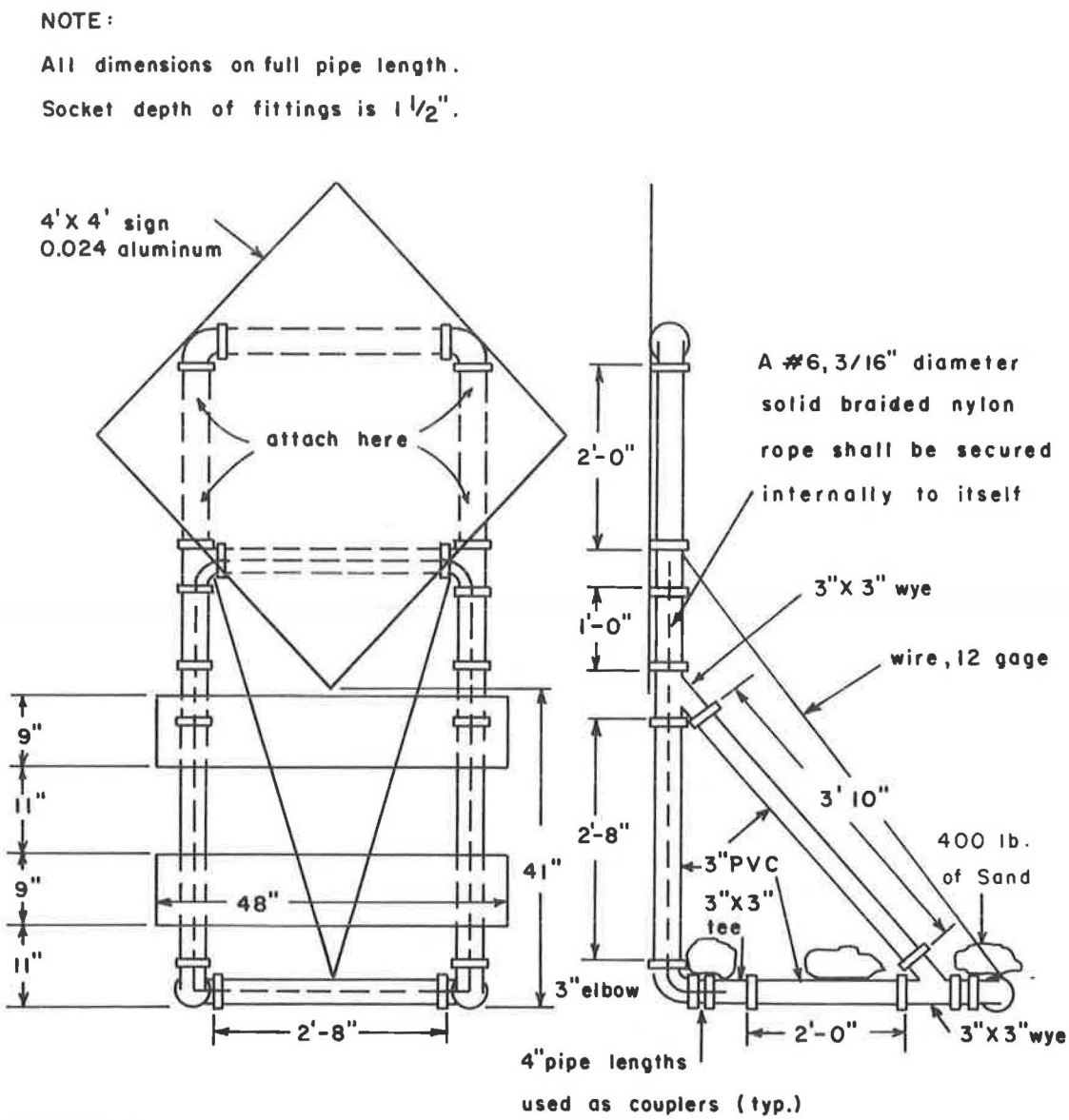

FIGURE 8 Aluminum sign on barricade with 41 in. of clearance.

FINAL CRASH TESTS

Method

In the fall of 1988, the University of Nebraska conducted 20- and 60-mph crash tests using a 1,800-lb, unoccupied 1980 Volkswagen Rabbit (J. A. Magdaleno, R. K. Faller, and E. R. Post, unpublished data, 1989). Two piezoresistive accelerometers were bolted to the car floor to measure longitudinal accelerations, two 16-mm cameras documented the collisions at 500 frames/sec, and tape pressure switches measured the speed before and after impact. The Rabbit was towed by another vehicle, guided by a suspended cable, and released before impact.

Criteria

The test performance was judged on the basis of criteria set by AASHTO (*5*) and NCHRP (*6*). The purpose of the 20-mph test was to measure the breakaway characteristics of the signs and their barricade supports. On impact the center of the bumper was planned to be midway between the two barricade posts. The purpose of the 60-mph test was to estimate vehicle stability, vehicle trajectory, occupant risk, debris intrusion into the passenger compartment, and the hazard from debris to other traffic. The right post was contacted by the quarter point of the vehicle's bumper. The 21-in.-clearance vinyl sign was not tested because it closely resembled the standard barricade that was crash-tested more than 15 years ago. On the other hand, because of the windshield cracking experienced in the preliminary tests, the 41-in.-clearance aluminum sign was also struck at 20 mph and 60 mph with the bumper centered on one post.

Results

Table 5 gives the results of the 12 full-scale crash tests into the experimental barricade-supported signs. The vehicle impact

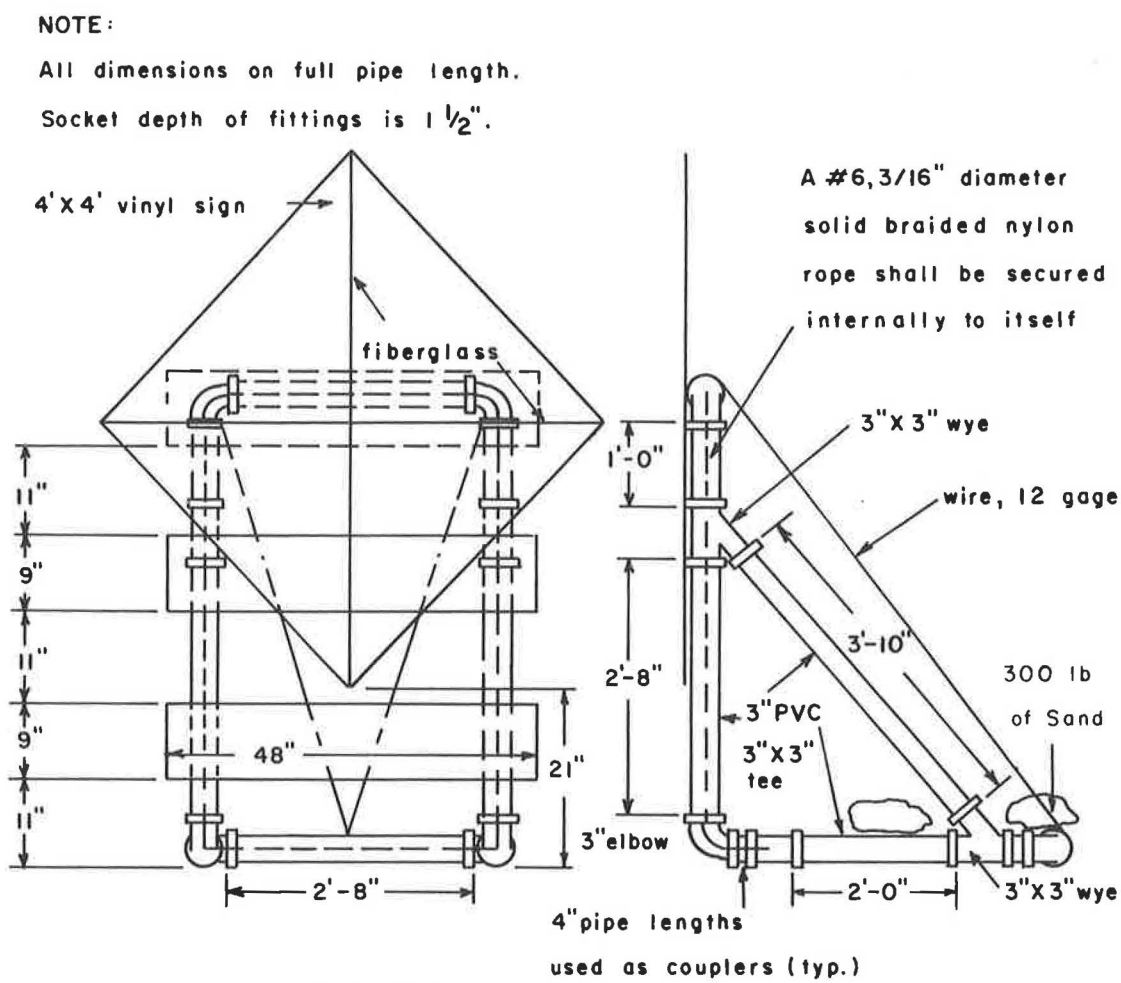

FIGURE 9 Vinyl sign on barricade with 21 in. of clearance.

velocity, the vehicle change in velocity, and the occupant impact velocity were all normalized to give values that would be more indicative of the test results had the tests been conducted at the exact target impact speed. The following conclusions can be noted:

1. Three of the devices proved satisfactory in meeting the criteria: the 41-in.-clearance aluminum sign on an extended barricade, the 38-in.-clearance vinyl sign on an extended barricade, and the 50-in.-clearance vinyl sign on an extended barricade.
2. The 29-in.-clearance aluminum sign on an extended barricade proved to be marginal because high occupant impact velocities (17.4 ft/sec) and vehicle velocity changes (16.9 ft/sec) were recorded.
3. The 12-in.-clearance aluminum sign on a standard barricade failed the criteria because the sign and support structure intruded into the passenger compartment.

SUMMARY AND CONCLUSIONS

On the basis of the results of the 60-mph wind tests and the 20-mph and 60-mph crash tests, the following meet AASHTO and NCHRP criteria for 4-ft × 4-ft vinyl and 0.024-in.-thick aluminum signs attached to Type III breakaway barricades:

1. 21-in.-clearance vinyl roll-up sign,
2. 29-in.-clearance, 0.024-in.-thick aluminum sign,
3. 38-in.-clearance vinyl roll-up sign,
4. 41-in.-clearance, 0.024-in.-thick aluminum sign, and
5. 50-in.-clearance vinyl roll-up sign.

Although the 29-in.-clearance, 0.024-in.-thick aluminum sign was marginal in passing the 60-mph crash test, the University of Nebraska said "this design has the ability to perform satisfactorily provided that it is ballasted properly" (J. A. Magdaleno, R. K. Faller, and E. R. Post, unpublished data, 1989). It is important that the sandbags be distributed evenly along the base of the barricade because they tend to pile up under the car.

The signs were reusable and the barricade frames could be repaired with available interchangeable parts. Type III breakaway barricades with attached 4-ft × 4-ft signs continued to function in a manner consistent with standard Type III breakaway barricades. This means that wood or metal frames will no longer be needed to support signs in the vicinity of existing Type III breakaway barricades. This in turn means fewer fixed objects and lower costs.

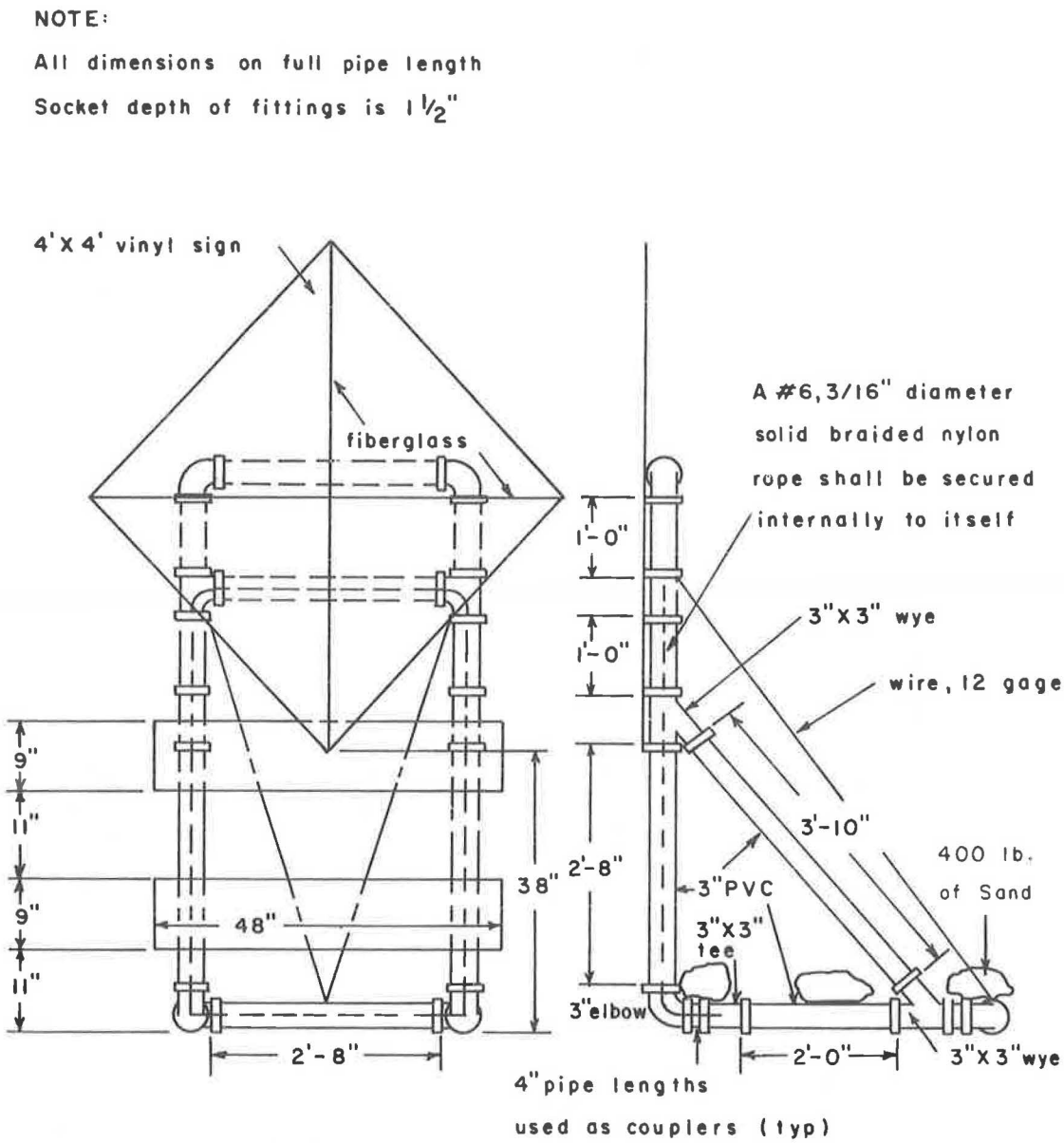

FIGURE 10 Vinyl sign on barricade with 38 in. of clearance.

RECOMMENDATIONS

Vinyl roll-up signs with 21, 38, and 50 in. of clearance and 0.024-in.-thick aluminum signs with 29 and 41 in. of clearance from the bottom of the sign to the pavement are recommended for implementation in work zones.

IMPLEMENTATION OF FINDINGS

Starting in November 1989, the 50-in.-clearance vinyl roll-up signs were used in actual work zones. The signs were monitored and functioned properly.

ACKNOWLEDGMENTS

This research was done in cooperation with the FHWA, U.S. Department of Transportation. Appreciation is expressed to the following persons: Charles A. Goessel of the New Jersey Department of Transportation's Design Division for originating the idea of using signs on breakaway barricades; Eugene F. Reilly, Richard L. Hollinger, and Arthur W. Roberts for their administrative assistance; Lad Szalaj, Bill Crowell, Bob Tomlinson, John Senyk, Zolton Zeisky, and Tom Black for their technical assistance; the Technical Committee members for their valuable input; and Judith Scymanski and Yolanda Prilo for typing the final report. In addition, appreciation is

NOTE:

All dimensions on full pipe length.

Socket depth of fittings is 1 1/2".

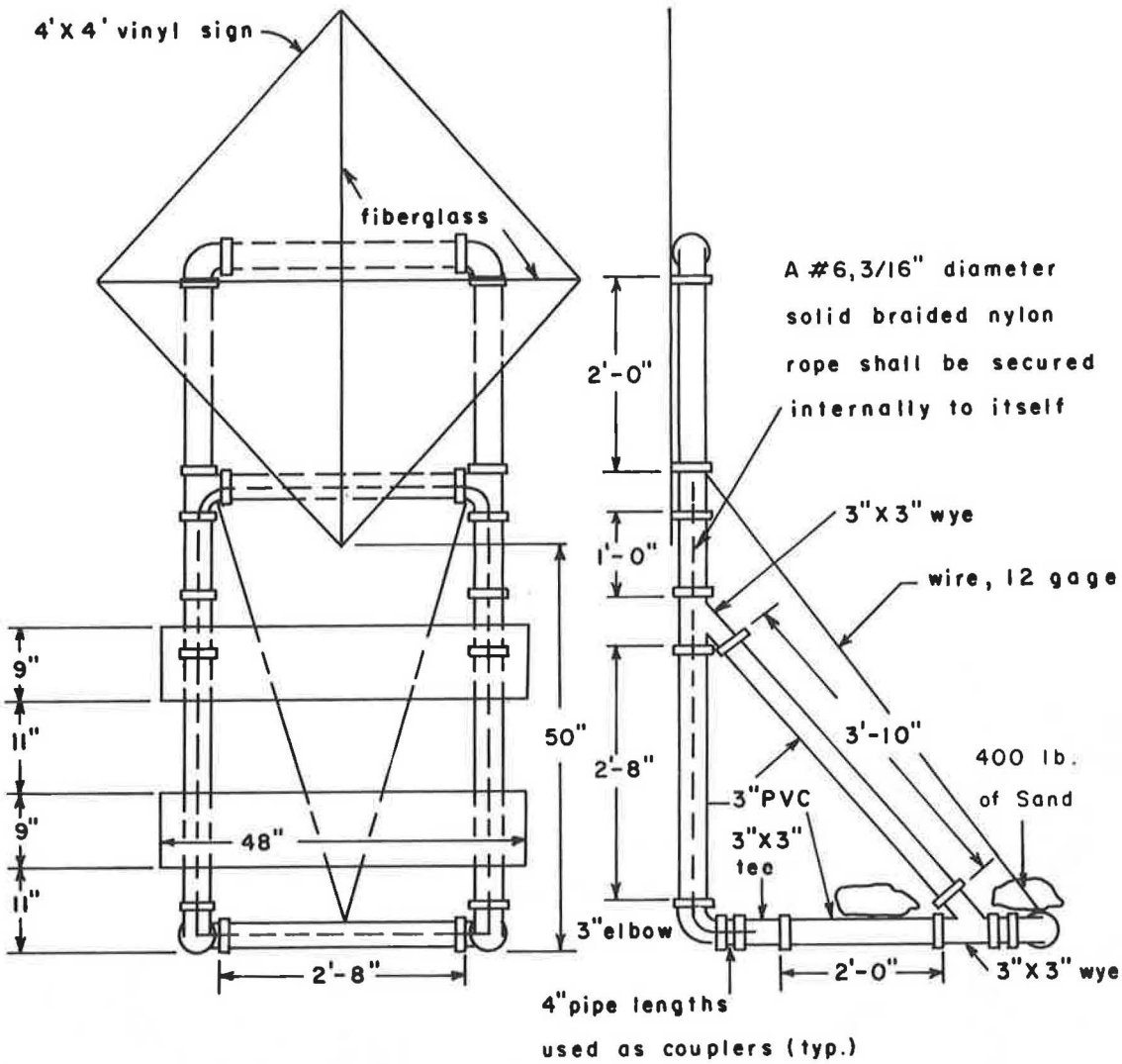

FIGURE 11 Vinyl sign on barricade with 50 in. of clearance.

TABLE 3 RESULTS OF PHASE 3 WIND TESTS

Test Number	Sign Material	Sign Clearance (in.)	Ballast (lbs.)	Wind Direction	Results*
1	aluminum	12	300	behind sign	pass
2	aluminum	12	300	into sign	pass
3	aluminum	29	400	behind sign	pass
4	aluminum	29	400	into sign	pass
5	aluminum	41	400	behind sign	pass
6	aluminum	41	400	into sign	pass
7	vinyl	21	300	behind sign	pass
8	vinyl	21	300	into sign	pass
9	vinyl	38	400	behind sign	pass
10	vinyl	38	400	into sign	pass
11	vinyl	50	400	behind sign	pass
12	vinyl	50	400	into sign	pass

* To pass, the sign and barricade were to keep their integrity when subjected to a wind load of 60 mph.

FIGURE 12 Preliminary crash test vehicle guidance system.

FIGURE 13 Preliminary crash test.

FIGURE 14 Typical preliminary crash test vehicle damage.

TABLE 4 RESULTS OF PRELIMINARY CRASH TESTS

Test Number	Sign Material	Sign Clearance(in.)	Ballast (lbs.)	Number of Posts Hit	Results
1	aluminum	12	300	1	small dent in hood
2	aluminum	29	400	2	small dent in hood
3	aluminum	41	400	1	windshield cracked
4	vinyl	21	300	2	small dent in hood
5	vinyl	38	400	2	small dent in hood
6	vinyl	50	400	2	small dent in hood

FIGURE 15 Preliminary crash test windshield damage from 41-in.-clearance aluminum sign.

TABLE 5 RESULTS OF FINAL CRASH TESTS

Test Number	Sign Material	Sign Clearance(in.)	Speed (mph)	Ballast (lb.)	Number of Posts Hit	Results*
1	aluminum	12	20	300	2	pass
2	aluminum	12	60	300	2	fail
3	aluminum	29	20	400	2	pass
4	aluminum	29	60	400	2	marginal
5	aluminum	41	20	400	2	pass
6	aluminum	41	60	400	2	pass
7	aluminum	41	20	400	1	pass
8	aluminum	41	60	400	1	pass
9	vinyl	38	20	400	2	pass
10	vinyl	38	60	400	2	pass
11	vinyl	50	20	400	2	pass
12	vinyl	50	60	400	2	pass

* To pass, the barricade supported sign structures must have met NCHRP and AASHTO criteria for:

a. debris intrusion into the passenger compartment,

b. hazard to other traffic from debris,

c. passenger compartment integrity,

d. vehicle velocity change (not to exceed 15 fps),

e. vehicle stability,

f. vehicle trajectory,

g. occupant impact velocity (not to exceed 15 fps) and

h. occupant ride down acceleration (not to exceed 15 g's).

expressed to the FAA Technical Center for the use of the jet exhaust wind tunnel; the University of Nebraska for performing the final crash tests; the Bureau of Transportation Technology Research for videotaping the wind and preliminary crash tests; the Division of Maintenance of the New Jersey Department of Transportation for providing the trucks used in the wind tests; and finally MDI Traffic Control Products, a division of Marketing Displays, Inc. for providing vinyl roll-up signs and Windmaster sign holders for testing.

REFERENCES

1. D. C. Harris. Steps Toward Stopping the Slaughter in the Work Zone. *Traffic Safety*, July–Aug. 1987.
2. A. S. Miller. Breakaway Barricades. *Public Roads*, Vol. 40, No. 1, 1976.
3. *Breakaway Barricades*. Demonstration Project No. 41, FHWA, U.S. Department of Transportation, 1978.
4. *Manual on Uniform Traffic Control Devices*. FHWA, U.S. Department of Transportation, 1978.
5. *Standard Specifications for Structural Supports for Highway Signs, Luminaires, and Traffic Signals*. American Association of State Highway and Transportation Officials, 1985.
6. J. D. Michie. *NCHRP Report 230: Recommended Procedures for the Safety Performance Evaluation of Highway Appurtenances*. TRB, National Research Council, Washington, D.C., 1981.