Forecasting Optimum Bridge Management Decisions and Funding Needs on the Basis of Economic Analysis

CHWEN-JINQ CHEN AND DAVID W. JOHNSTON

An analytic method is presented for evaluating optimum bridge management decisions for maintenance, rehabilitation, and replacement. The decision process is based on economic analysis of the alternatives using an equivalent annualized cost approach. Both user costs because of bridge level of service deficiencies and owner costs for maintenance and improvement are included in the analysis. By forecasting the optimum time and cost for actions on each bridge in the future, funding needs and number of improvements can be predicted. Results of an example bridge system analysis are presented.

In 1985, approximately 41 percent of the nation's bridges were classified as either structurally deficient or functionally obsolete (*1*). The backlog of needs on over 500,000 bridges is acknowledged to be substantial. Increasingly, local, state, and congressional elected officials have been requesting the responsible transportation agencies to predict those needs and make bridge management decisions on a cost-effective basis. However, rigorous approaches for estimating current and future needs and for making these decisions have not been available.

BACKGROUND

Under the current federally mandated inspection system, three empirical summary evaluations are made for each bridge to calculate a sufficiency rating (*2*). Depending on the rating, which can range from 0 to 100 points, a bridge may be eligible for federal funding for improvements. Bridges may be classified as structurally deficient for several reasons, but particularly if posted for low load capacity. A bridge may be classified as functionally obsolete if it has relatively narrow width, poor alignment, or low vertical clearance. The sufficiency rating considers these factors, element conditions, etc., but is relatively insensitive to the volume of traffic and the roadway functional classification.

Although any bridge deficiency is undesirable, the effect of the deficiency on the public may be different for bridges with differing traffic volumes and characteristics. Because the sufficiency rating places little emphasis on the traffic volume and the highway functional classification, the level of service deficiency point system was developed (*3*) to aid ranking of bridge improvements.

C-j. Chen, National Nankang Ilan Expressway Office, Ministry of Communications, Taipei, Taiwan, Republic of China. D. W. Johnston, Department of Civil Engineering, North Carolina State University, Raleigh, N.C. 27695–7908.

The deficiency point system compares the current width, load capacity, and vertical clearance of a bridge to the corresponding ideal user level of service goals for these characteristics to determine user level of service deficiencies. Deficiency points are calculated considering the level of service deficiencies and traffic volume as a measure reflecting user costs. Bridges can then be ranked for improvement in order of quantity of deficiency points.

Although these approaches have been helpful in setting priorities for bridge improvements, these two empirical systems have no capability for determining the optimum improvement alternative for a bridge or the optimum time for the alternative selected. To obtain adequate funds to maintain the bridge system at an acceptable level of service with minimum cost, there is a need to predict required funding. A rational system is needed for cost-effective decisions to determine the optimum time and alternative for maintaining, rehabilitating, or replacing an existing bridge. Future funding needs for the entire bridge system should be based on the optimum alternative selected for each individual bridge if adequate funds are available to undertake all the optimum alternatives. The objective is to develop such a system (*4*).

BRIDGE IMPROVEMENT UNDER A LEVEL OF SERVICE CONCEPT

With some special constraints, bridges can be evaluated for improvement or replacement in a manner similar to an item of equipment. Hanssmann (*5*) considers equipment replacement as a problem of minimizing total cost over the entire planning horizon. Assuming that the acquisition cost, final salvage value, and economic life of the new asset will not be influenced by the replacement time of the old asset, the cost C_r of maintaining the old asset, which has incremental decline of salvage value and incremental current expenses, was expressed by Hanssmann as

$$C_r = \sum_{t=1}^{r} (d_t + e_t) + (T - r) * \left(\frac{A - S + E}{L}\right) \qquad r = 1, \ldots, T \tag{1}$$

where

d_t = decline in salvage value of the old asset in Year t,
e_t = current expense of the old asset in Year t,

A = acquisition cost of the new asset proposed,
S = salvage value of the new asset at the end of service life,
E = total current expense of the new asset over the service life,
L = service life of the new asset,
r = projected replacement year, and
T = planning horizon.

The expression $(A - S + E)/L$ represents the average annual cost of the new asset over its lifetime. The optimal time T^* to replace the old asset can be found by minimizing Equation 1. From Figure 1, the value T^* can be found by inspection. Area $OABCT$ represents the minimum total cost C_{T^*} of Equation 1. If the old asset is replaced 1 year early or late, the total cost of maintaining it will be greater than that of being replaced at year T^*. The differences are the extra costs represented by the areas $A'B''B$ and $BB'C'$, respectively. Thus, when the annual cost of the old asset exceeds the average annual cost of the new asset for the first time, the time for replacement has come.

Characteristics of Bridge Service Life

A bridge starts its service life when construction is completed. Because of the effect of traffic and other spontaneous factors, bridge elements deteriorate. During inspection, elements such as the deck, superstructure, and substructure are rated numerically for condition from 0 to 9, with 9 indicating new condition. When these elements deteriorate, adequate maintenance is needed to keep the bridge in good service condition. Different elements have various deterioration rates, and the maintenance needs vary as a function of the element, material type, and condition. Minor repairs at a particular condition level do not necessarily improve the condition level of the element, but may extend the time before a drop occurs to the next lower level. Without reconstruction or rehabilitation, maintenance needs would increase with a decrease of the element conditions.

If the bridge has a narrow width, low vertical clearance, low load capacity, or poor alignment relative to the roadway, user costs related to bridge deficiencies will be incurred. For example, costs can be generated from time lost and extra mileage accumulated because of detours resulting from deficiencies in load capacity or vertical clearance. Because of deterioration of the materials and other factors, bridge load capacity may decrease with time. Correspondingly, the bridge posting decreases and a higher proportion of the total vehicles desiring to use the bridge has to detour.

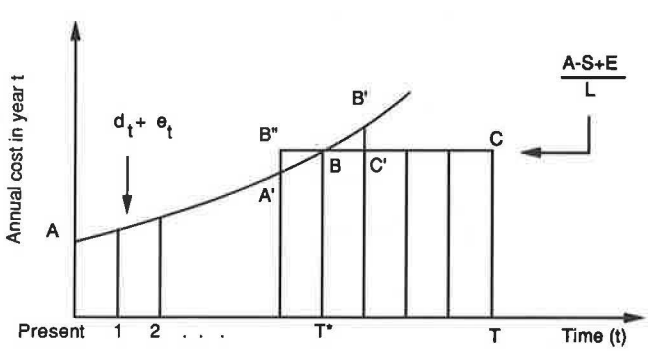

FIGURE 1 Optimal time to replace old asset.

User costs are also generated because of accidents. Narrow, poorly aligned, and low-clearance bridges have higher vehicle accident probabilities. The number of accidents is directly correlated with the total number of vehicles using the bridge. Generally, the traffic volume increases with time, so the user costs generated by deficiencies that cause accidents also increase with time.

Roadway systems have various service purposes. Interstate highways are constructed mainly for long distance Interstate travel. Arterial roadway systems connect important towns located in adjacent counties within a state. Collector systems are constructed to provide the intracounty services with shorter traveling distances. Local routes provide access to farms, residences, and some abutting properties. As a result, different factors influence user costs generated by bridge level of service deficiencies on these roadway systems with different functional classifications. Thus, the user costs need to be determined considering functional classifications of the bridges.

Usually, there are three improvement alternatives for a deteriorated bridge. The first alternative is to replace the existing bridge with a new one having a desirable level of service. The elements of a new bridge have the highest condition level, and user costs would be reduced to zero at the beginning of its service life.

The second alternative is to rehabilitate the existing bridge using the optimum rehabilitation action under a given set of bridge element conditions. After rehabilitation, the condition level would be improved to a better, but generally less than new, level, and some additional years of service life would be gained. The user level of service would also be improved, but not generally to the highest level.

The third alternative is to only continue essential maintenance as a means of avoiding accelerated deterioration. The annual maintenance costs and user costs are the only sources for this alternative, and these costs will increase year by year because of bridge deterioration and traffic volume increase.

Optimum Improvement Action and Time Prediction

Because maintenance and user costs increase with age, the economic life increment for a deteriorated bridge may be taken as 1 year. From Equation 1 and Figure 1, the optimum time to rehabilitate or replace an existing bridge is the time when the year-by-year cost of the existing bridge exceeds the economic annual equivalent cost of the new bridge or the rehabilitation action. According to Smith (*6*), the year-by-year costs for a piece of deteriorated equipment can be expressed as

$$C_t = M_t + (S_{t-1} - S_t) + (S_{t-1}) * i \qquad (2)$$

where

C_t = year-by-year cost of the equipment at Year t,
M_t = maintenance and operating cost at Year t,
S_{t-1} = salvage value of the equipment at beginning of Year t,

S_t = salvage value of the equipment at end of Year t, and
i = interest rate.

Equation 2 can also be stated as C_t = (maintenance cost at Year t) + (decline in value at Year t) + (interest return if equipment is sold at beginning of Year t).

Smith (*6*) also stated the equivalent annual cost of the proposed replacement or rehabilitation as

$$\text{EAC} = \left[\text{FC} - S_T * (P/F,i,T) + \sum_{t=1}^{T} M_t * (P/F,i,t)\right] * (A/P,i,T) \quad (3)$$

where

EAC = equivalent annual cost of the proposed alternative,
FC = first acquisition cost of the proposed alternative,
S_T = terminal salvage of the proposed alternative,
M_t = maintenance costs of the proposed alternative at Year t,
T = service life gained,
$(P/F,i,t)$ = present worth factor [$= (1 + i)^{-t}$],
$(A/P,i,T)$ = capital recovery factor $\left[= \frac{i * (1 + i)^T}{(1 + i)^T - 1}\right]$, and
i = interest rate.

Annual Cost of the Existing Bridge

One of the alternatives for bridge improvement is to keep the existing bridge for 1 year or more by providing adequate maintenance. Although some materials of various types of bridges can be reused, most have relatively small or no salvage value compared with their construction costs. Thus, it would not be appropriate to consider salvage decline and interest return from salvage in the economic analysis for bridge improvement. As a result, the annual cost from Equation 1 to keep the existing bridge for an additional year comes only from the possible element maintenance costs.

Although the user costs generated by a level of service deficiency are not paid or assumed directly by government, the public is both the user and the ultimate owner of a bridge. Thus, for a deficient bridge, the user costs should be considered as part of the annual cost. User costs, generated by deficiencies in width, vertical clearance, and alignment, increase with increase of traffic volume. User costs resulting from a bridge load capacity deficiency increase with increase of load capacity deficiency and traffic volume. As the bridge traffic volume increases with time, the annual user costs also increase with time. From Equation 1, the annual cost for the existing bridge can be stated as

$$\text{ACEB}(t) = \text{ARMC}(t) + \text{AURC}(t) \quad (4)$$

where

ACEB(t) = annual cost for the existing bridge in Year t,
ARMC(t) = annual regular maintenance cost of the existing bridge in Year t, and
AURC(t) = annual user cost of the existing bridge in Year t.

Furthermore,

$$\text{ARMC}(t) = \sum_{j=1}^{M} \text{MC}_j(t) \quad (5)$$

for M types of element maintenance, and

$$\text{AURC}(t) = \sum_{k=1}^{N} \text{URC}_k(t) \quad (6)$$

where

N = number of types of level of service deficiencies,
$\text{MC}_j(t)$ = maintenance cost for Element Type j in Year t, and
$\text{URC}_k(t)$ = user cost for Deficiency Type K in Year t.

Equivalent Annual Cost for the New Bridge

Another alternative for bridge improvement is to replace the existing bridge with a new one having a desirable level of service. From Equation 3, the cost for a new proposed alternative comes from the first acquisition cost and all possible maintenance and operating costs over its service life. For a new bridge, the total cost over its service life includes construction costs, maintenance costs, and user costs caused by level of service deficiencies for width, vertical clearance, alignment, and load capacity. As in Equation 3, the cost components of the new bridge over its economic service life can be converted to equivalent annual cost as follows:

$$\text{AERP} = \text{RPC} * (A/P,i,N) + \text{AEMNT} + \text{AEUSR} \quad (7)$$

$$\text{AEMNT} = \left\{\sum_{t=1}^{N} [\text{ARMC}(t) * (P/F,i,t)]\right\} * (A/P,i,N) \quad (8)$$

$$\text{AEUSR} = \left\{\sum_{t=1}^{N} [\text{AURC}(t) * (P/F,i,t)]\right\} * (A/P,i,N) \quad (9)$$

where

AERP = annual equivalent replacement cost,
RPC = actual replacement cost,
AEMNT = annual equivalent maintenance cost,
AEUSR = annual equivalent user cost, and
N = economic service life of the new bridge.

The annual regular maintenance cost ARMC(t) and annual user cost AURC(t) of the new bridge over its expected service life can be calculated using Equations 5 and 6, respectively.

Equivalent Annual Cost for Rehabilitated Bridge

The third alternative for improving the existing bridge is to rehabilitate it to a higher condition level. The cost components

for this alternative are the same as those of replacement. After rehabilitation, some additional years of service life can be gained. For a bridge with n_1 additional years of service life gained after rehabilitation, the equivalent annual cost for the rehabilitation alternative can be expressed as

$$\text{AERH} = \text{RHC} * (A/P,i,n_1) + \text{AEMRH} + \text{AEURH} \tag{10}$$

$$\text{AEMRH} = \left[\sum_{t=1}^{n_1} \text{ARMC}(t) * (P/F,i,t)\right] * (A/P,i,n_1) \tag{11}$$

$$\text{AEURH} = \left[\sum_{t=1}^{n_1} \text{AURC}(t) * (P/F,i,t)\right] * (A/P,i,n_1) \tag{12}$$

where

AERH = annual equivalent rehabilitation cost,
RHC = actual rehabilitation cost,
AEMRH = annual equivalent maintenance cost over the extended period because of rehabilitation,
AEURH = annual equivalent user cost over the extended period because of rehabilitation, and
n_1 = additional years of service life gained because of rehabilitation.

The annual regular maintenance cost ARMC(t) and annual user cost AURC(t) of the rehabilitated bridge can be calculated using Equations 5 and 6 over the additional service life gained after rehabilitation.

At any given time, a bridge can be rehabilitated to higher condition levels, as shown in Figure 2. Each of these different rehabilitation policies requires different efforts. The additional service lives gained and user costs reduced by these different policies also vary. The rehabilitation costs and user costs after rehabilitation for different policies can be converted to equivalent annual costs over the corresponding extra service lives gained. The one with the lowest equivalent annual cost is the optimum rehabilitation action, which should be chosen as the rehabilitation alternative and then compared with other alternatives for the bridge, such as replacement and regular maintenance.

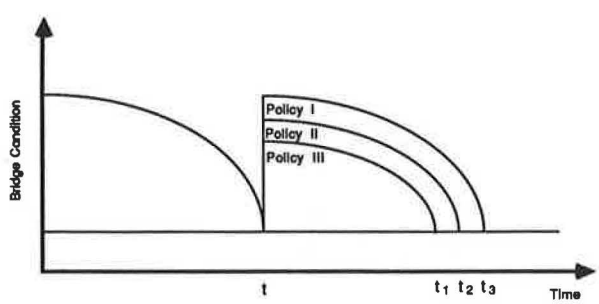

FIGURE 2 Rehabilitating the bridge element to different higher condition levels.

Analysis Procedure and Decision Rules

The equivalent annual costs of the three alternatives, calculated using Equations 4, 7, and 10, are compared to determine the optimum improvement action. The alternative with the lowest cost is the best alternative at that time. If the annual cost of the existing bridge is lowest, the bridge will be continued in service for an additional year with appropriate maintenance. The bridge will then be aged 1 year and its element conditions, load capacity, and ADT will also be estimated according to its structure and material types and geographic location. The annual maintenance, user, and rehabilitation costs of the existing bridge under the new predicted conditions will be calculated. The same evaluations will be repeated year after year until an improvement action other than maintaining the existing bridge for another year is favored. The improvement action selected in the final evaluation iteration and the time predicted will be considered as the optimum improvement action and life time for the bridge.

The annual maintenance costs for the existing bridge are determined in the evaluation iterations. By adding the maintenance costs of all the bridges in the system within each year, an annual maintenance budget can be determined. Similarly, the total needed actual replacement or rehabilitation costs in a given year are determined by adding such costs for all bridges selected by the analysis for the corresponding improvement.

Two types of level of service goals affect the results of the evaluation. First, the user level of service goals for bridge width, vertical clearance, load capacity, and approach roadway alignment are considered in terms of user costs. Specifying higher user level of service goals will decrease the annual user costs of the bridge after being rehabilitated but will increase the rehabilitation cost. Specifying lower user level of service goals for rehabilitation will not yield a dramatic decrease in the annual user costs but will result in lower rehabilitation costs.

The second type of level of service goal, related to maintenance condition level, also influences the improvement action selected in the analysis system. Different minimum or acceptable maintenance condition levels influence the rehabilitation frequency and efforts needed, as shown in Figure 3. A lower bridge condition level allowed in service reduces rehabilitation frequency but will accelerate deterioration and decrease the average condition level of the system. This maintenance level of service is different from the user level of service mentioned previously. In the evaluation iteration, if a bridge element reaches the predetermined minimum

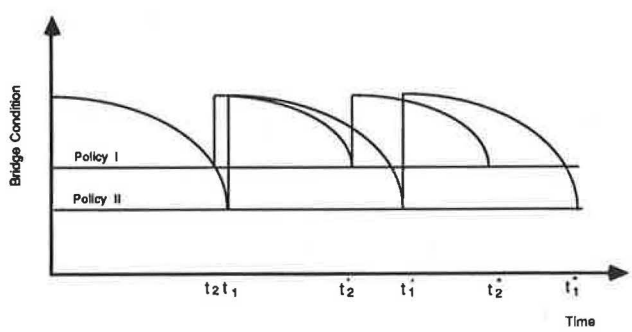

FIGURE 3 Rehabilitating the bridge element from different condition levels.

acceptable maintenance level of service, a rehabilitation action will be initiated to raise the condition to a higher, and perhaps desirable, level.

IMPLEMENTATION

A computer program (*4*) was created for analysis purposes. The program incorporates the analysis procedures described herein, and the parameters and relationships for bridge ownership costs, user costs, element condition deterioration rates, etc., also determined in this study.

For each individual bridge, the annual maintenance costs and user costs are calculated based on the bridge's current condition and user level of service deficiencies in relation to the desirable level of service goals. The bridge improvement alternatives for rehabilitation and replacement are generated, and equivalent annual costs for the alternatives are calculated. In any given year, if the annual cost of the existing bridge is the lowest cost, the bridge will be maintained for another year. The bridge element conditions in the subsequent year will then be predicted based on the deterioration rates applicable to the element, material, and environment. The traffic volume of the bridge will also be predicted on the basis of the ADT increase rate. The analysis will be repeated each year based on the new predicted conditions and traffic volume until one of the improvement alternative costs is favored.

When the optimum alternative is determined, the same analysis iterations will continue for the rehabilitated or new bridge. The analysis iterations will continue for as many years as the predetermined analysis horizon. Figure 4 shows the flow chart of the analysis program.

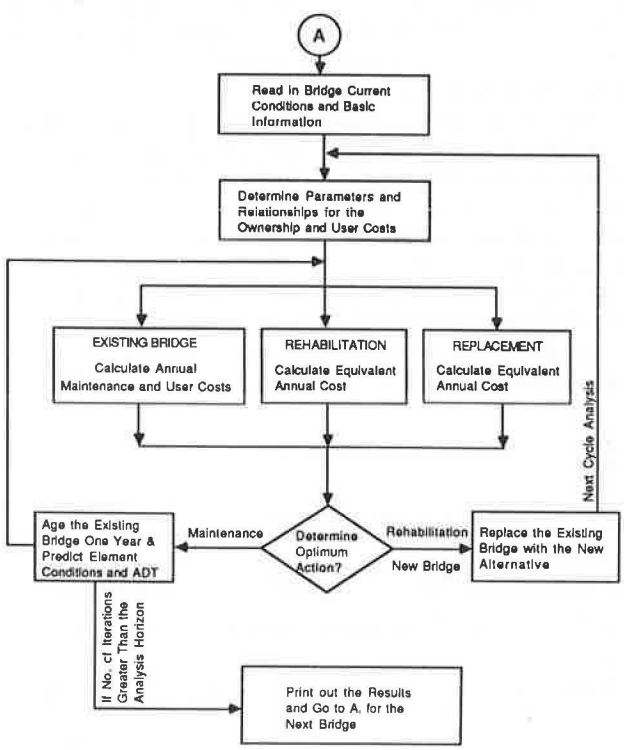

FIGURE 4 Flow chart of the bridge optimum alternative analysis program.

In addition to the replacement alternative, two types of bridge rehabilitation alternatives are provided in the analysis program. A rehabilitation alternative will be triggered for consideration if one of the deck, superstructure, or substructure ratings decreases to the acceptable minimum and the other two ratings are also relatively low. This rehabilitation action cost would be based on increasing all conditions to the level specified as desirable.

However, when some of the element conditions deteriorate to the minimum acceptable level and others still remain good, a second possible alternative is an interim rehabilitation. This would improve the element in poor condition to a higher condition level compatible with the good elements, as shown in Figure 5. The capability to generate an interim rehabilitation alternative has been incorporated into the analysis program. Two interim rehabilitation alternatives are available in the analysis as follows:

1. Rehabilitate the lowest condition among the three types of bridge elements to as high as the average condition of the two higher conditions if only one condition rating is less than 6, and the difference of the average of the two higher conditions and the lowest condition is greater than or equal to 2 points, or
2. Rehabilitate the lower two conditions to as high as the highest condition if only one of the three element conditions is greater than or equal to 6, and the difference of the highest condition and the lowest condition is greater than or equal to 2 points.

On the basis of these two alternatives, an interim rehabilitation alternative is considered only when there is an element condition rating of less than 6. An interim rehabilitation alternative always improves the lowest element condition at least 2 points.

For a bridge deficient in level of service, two different improvement policies are incorporated in the analysis program. The first policy selects the optimum improvement action for the deficient bridge on the basis of the engineering economic analysis. The second policy initiates an immediate improvement whenever a bridge becomes deficient in relation to a specified user level of service. If the second policy is specified by the program user, an appropriate improvement action, either a replacement or a rehabilitation, is selected for the faulty bridge on the basis of its user level of service deficiency. A bridge with load capacity deficiency will be replaced with a new bridge. A bridge with both width and

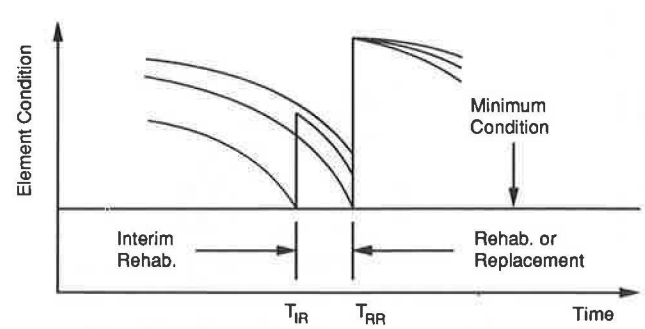

FIGURE 5 Interim rehabilitation evaluation.

vertical clearance deficiencies at the same time will also be replaced with a new bridge that will meet the desirable user level of service goals. A bridge with a width or a vertical clearance deficiency, but not both, will be rehabilitated to meet the user level of service goals specified by the program user.

On the basis of economic analysis, rehabilitation of bridges on rural, low-ADT routes for several cycles is often optimum. However, some types of bridges, for example timber bridges, cannot be practically rehabilitated after a long period because of decay or other general deterioration of the material. Thus, in the analysis, a replacement alternative is forced to be selected for a timber substructure or superstructure bridge over 40 years old and with a substructure or superstructure condition rating less than the minimum maintenance condition level of service specified.

During the analysis, the maintenance costs of all bridges in the system are accumulated for each year within the analysis horizon. The rehabilitation costs and replacement costs are also accumulated under the year determined as the optimum time for each respective alternative. The final total maintenance, rehabilitation, replacement, and user costs in each year within the analysis horizon are thereby predicted. Similar future yearly predictions are made for the average bridge element conditions, average bridge postings, and average level of service deficiencies on the basis of the assumption that funding needs and improvements predicted by the analysis are provided.

Although it is possible to set up intermediate level of service goals between the minimum acceptable and desirable level of service goals, only two goals, "Acceptable" and "Desirable," are used as the user level of service options in this program. These are the same goals numerically as those proposed by Johnston and Zia (*3*), which are presented in Tables 1–3.

The element condition rating in the National Bridge Inventory (NBI) Structure Inventory and Appraisal data file reflects current condition but not how long the element has been at that condition. For example, an element rated 6 may have just dropped from a 7 or may be about to drop to a 5. To provide a randomness in the first few years of evaluation, the initial condition rating was varied in increments of 0.1 point to a maximum of ±0.5 point using a random number generator. For example, a condition rating of 6 was randomly varied within the range 5.5 to 6.5.

Several controlling options are provided in the analysis program for users to select either all or subgroups of bridges in the inventory to be analyzed, and to specify acceptable and desirable maintenance condition levels, as well as user level of service goals. Subgroups of bridges can be selected to separate by federal-aid and non-federal-aid systems as well as

TABLE 1 BRIDGE LOAD CAPACITY GOALS

Functional Classification	Single Vehicle Capacity	
	Acceptable	Desirable
Interstate and Arterial	NP	NP
Major Collector	25 Tons	NP
Minor Collector	16 Tons	NP
Local	16 Tons	NP

NP : Not Posted (Maximum Legal Load = 33.6 Tons)

TABLE 2 BRIDGE VERTICAL CLEARANCE GOALS

Functional Classification	Vertical Clearance (Feet)	
	Acceptable	Desirable
Interstate and Arterial	14.0	16.5
Major and Minor Collectors	14.0	15.0
Local	14.0	15.0

TABLE 3 BRIDGE CLEAR DECK WIDTH GOALS

Functional Classification	Current ADT	Acceptable Width		Desirable Width	
		Lane (ft)	Shoulder (ft)	Lane (ft)	Shoulder (ft)
Interstate and Arterial	0 - 800	10	1	12	4
	801 - 2000	10	2	12	6
	2001 - 4000	11	2	12	8
	4000 - Over	11	3	12	8
Major and Minor Collectors	0 - 800	9	1	10	2
	801 - 2000	9	2	11	3
	2001 - 4000	10	2	12	3
	4000 - Over	10	3	12	3
Local	0 - 800	9	1	10	2
	801 - 2000	9	2	11	3
	2001 - 4000	10	2	12	3
	4000 - Over	10	3	12	3

Clear Deck Width = No. of Lanes x Lane Width + 2 x Shoulder Width

primary, secondary, and urban systems. The analysis horizon, interest rate, and percentage of the user cost considered in the analysis can also be specified.

ANALYSIS RESULTS

Data on the North Carolina bridge inventory for 1987 were used to demonstrate the Bridge Optimum Alternative Program.

Of the 16,813 state-owned structures on North Carolina highways, there are 14,460 bridges and 2,353 culverts and pipes. In the analyses, bridges with miscoded data for any entry, such as condition ratings, structural type, or single vehicle posting, were excluded. After the exclusions, 14,362 bridges (about 99.32 percent of the total state-owned bridges) were analyzed.

Three analysis cases will be mentioned. Each was for an analysis horizon of 50 years. Case 1 was based on all decisions being made on a purely economic basis. Case 2 was also based on optimum economic decisions, except that if a bridge did not meet acceptable criteria for levels of service, an improvement action was forced to be funded to eliminate the deficiency even if there were no economical alternatives. Case 3 was similar to Case 2, but desirable levels of service were imposed. Primary emphasis will be placed on Case 2. Additional details on these and other cases can be found elsewhere (*4*).

Analysis results for each of the cases include predictions of the optimum alternative, time, and improvement cost for each individual bridge, predictions of annual funding needs, number of bridges rehabilitated and replaced, average bridge element conditions, average single-vehicle posting, and average level of service deficiency for North Carolina bridges. Table 4 presents the analysis results of Case 2 for some example bridges. Table 5 presents the backlog of needs determined for the three cases, that is, the estimate of 1st year needs. Table 6 presents the predictions of future funding needs and number of bridges rehabilitated and replaced over the 50-year analysis horizon for Case 2, as an example. Predicted average bridge element conditions and average single-vehicle posting for Case 2 are shown in Figure 6.

On the basis of the results of Case 2 presented in Table 6, the analysis indicates an immediate need to replace 4,638 bridges at a cost of $1,002 million and to rehabilitate 1,640 bridges at a cost of $170 million. After the 1st year, the predicted annual budget need for rehabilitation ranges from $14.3 to $170 million, and the number of bridges predicted for rehabilitation ranges from 178 to 1,701 bridges each year. After the 1st year, the predicted annual budget need for replacement ranges from $5.5 to $82 million and the number of bridges predicted for replacement each year ranges from 11 to 214 bridges. On the basis of the Case 2 analysis results presented in Table 6, the predicted annual budget for maintenance within the next 50 years ranges from $3.4 to $6.3 million in 1986 dollars.

Over the 50 years, 9,159 bridges or 63.8 percent of the inventory will require replacement. If the replacements are accomplished as indicated by the needs analysis, the 14,362 bridges in the inventory will require 24,930 minor-to-major rehabilitations over the next 50 years. This number averages slightly less than two rehabilitations per bridge to maintain or improve condition, strength, and width. Maintenance needs would be $4 to $5 million per year assuming the replacements and rehabilitation were accomplished.

Figure 6 traces the system-wide average condition ratings and posted capacity assuming that the recommended funding is available and that the recommended work is done on the basis of the results of Case 2. The average deck condition rating increases from 6.53 currently to 7.66 in the 1st year of

TABLE 4 ANALYSIS RESULTS FOR EXAMPLE BRIDGES ON THE BASIS OF CASE 2

BRIDGE NO. / COUNTY / FACILITY	DK / SP / SB	SPTY / SUFF / DPA	FC / SY / FA	RL / DL / TT	CG / UG / LENG	YR	A / G / E	ADT	SV	WG	CDW	VCLU	D / K	S / P	S / B	*******ANNUALIZED EQUIVALENT COSTS AND OPTIMUM ACTION********** --REGULAR MAINT.-- MAIN $00	USER $00	EQUIV. $00	*	REPLACEMENT COST $000	EQUIV. $00	*	INTERIM D K	S P	S B	*	REHABILITATION COST $00	EQUIV $00	*	FINAL ACTION
42039	RC	T-BM	PA	25	33.6	88	31	5050	34	28	28.0	99.9	7	7	7	1	45	46	*	476	394	*	N			*	538	172	*	
HARNETT	RC	80.0	U	1	14.0	04	47	8948	34	28	28.0	99.9	4	5	5	11	79	90	*	476	395	*					1100	247	*	
US421 & NC55	PS	0.0	OF	37	130	04	47	8948	34	28	28.0	99.9	8	8	8												1100			RH
						26	69	19649	34	28	28.0	99.9	4	6	6	5	174	179	*	476	395	*				*	957	328	*	
						26	69	19649	34	28	28.0	99.9	8	8	8												957			RH
42040	RC	M-BM	LO	8	16.0	88	33	300	26	20	24.0	99.9	6	5	5	11	9	20	*	368	303	*	N			*	946	110	*	
HARNETT	ST	24.0	S	9	14.0	89	34	303	25	20	24.0	99.9	6	5	4	11	9	20	*	368	303	*				*	1020	117	*	
SR1213	TM	4.0	SR	37	142	89	34	303	26	20	24.0	99.9	8	8	8												1020			RH
						09	54	368	24	20	24.0	99.9	6	6	4	REPLACED DUE TO SUBSTRUCTURE CONDITION														
						09	54	368	34	24	27.0	99.9	9	9	9					368										NB
42041	TM	M-BM	LO	3	16.0	88	33	500	8	20	19.2	99.9	6	7	7															
HARNETT	ST	22.0	S	7	14.0	88	33	500	8	20	19.2	99.9	6	7	8	REPLACED DUE TO LOAD CAPACITY DEFICIENCY														
SR1215	TM	25.0	SR	12	158	88	33	500	34	24	27.0	99.9	9	9	9					282										NB
						24	36	710	34	24	27.0	99.9	4	5	5	9	0	9	*	384	317	*				*	1081	94	*	
						24	36	710	34	24	27.0	99.9	8	8	8												1081			RH
42044	CS	SLAB	LO	50	16.0	88	2	300	34	20	23.8	99.9	8	8	8	0	1	1	*	361	298	*				NOT AVAILABLE			*	
HARNETT	PS	83.0	S	7	14.0	15	29	390	34	20	23.8	99.9	5	4	6	4	1	5	*	361	297	*				*	960	87	*	
SR1222	ST	0.0	SR	37	137	15	29	390	34	20	23.8	99.9	8	8	8												960			RH
42045	RC	T-BM	MA	13	33.6	88	57	6500	34	28	20.0	99.9	6	4	5	67	559	626	*	2484	2064	*N				*	7725	837	*	
HARNETT	RC	16.0	P	1	14.0	88	57	6500	34	28	20.0	99.9	6	4	5	67	559	626	*	2484	2064	*				*	7725	837	*	
US401	RC	13.0	OF	37	739	88	57	6500	34	28	28.0	99.9	8	8	8												7725			RH
						10	79	14273	34	28	28.0	99.9	4	6	6	36	126	163	*	2484	2064	*				*	5709	748	*	
						10	79	14273	34	28	28.0	99.9	8	8	8												5709			RH
						32	**	31341	34	28	28.0	99.9	4	6	6	36	278	314	*	2484	2064	*				*	5709	900	*	
						32	**	31341	34	28	28.0	99.9	8	8	8												5709			RH
42046	RC	M-BM	MA	22	33.8	88	30	7000	34	28	28.2	99.9	5	7	7	27	59	86	*	2669	2223	*N				*	4677	639	*	
HARNETT	ST	79.0	P	1	14.0	89	31	7255	34	28	28.2	99.9	4	7	7	27	61	88	*	2669	2223	*				*	5252	660	*	
US401	ST	0.0	OF	37	608	89	31	7255	34	28	28.2	99.9	8	8	8												5252			RH
						11	53	15930	34	28	28.2	99.9	4	5	6	54	134	188	*	2669	2224	*				*	6759	865	*	
						11	53	15930	34	28	28.2	99.9	8	8	8												6759			RH
						33	75	34981	34	28	28.2	99.9	4	5	6	54	294	349	*	2669	2224	*				*	6759	1025	*	
						33	75	34981	34	28	28.2	99.9	8	8	8												6759			RH

TABLE 5 IMMEDIATE NEEDS BACKLOG FOR REHABILITATION AND REPLACEMENT CALCULATED IN YEAR 1 OF ANALYSIS HORIZON

Case	Rehabilitation Cost Millions	No. of Bridges Rehabilitated	Replacement Cost Millions	No. of Bridges Replaced	Total Cost Millions	Total Bridges
1	$96	831	$ 634	3,224	$ 730	4,065
2	$170	1,640	$1,002	4,638	$1,172	6,278
3	$570	2,666	$1,892	8,482	$2,462	11,148

TABLE 6 PREDICTED FUTURE FUNDING NEEDS AND NUMBER OF BRIDGES NEEDING IMPROVEMENT FOR NORTH CAROLINA BRIDGES ON THE BASIS OF CASE 2

YEAR	REGULAR MAINTENANCE	REHABILITATION COST	NO. OF BRIDGES	REPLACEMENT COST	NO. OF BRIDGES
1988	$3,453,228	$169,810,324	1,640	$1,002,027,427	4,638
1989	$3,521,687	$14,371,845	180	$74,119,002	214
1990	$3,465,007	$42,771,950	420	$36,896,427	146
1991	$3,413,397	$44,313,706	249	$38,137,689	185
1992	$3,809,075	$23,288,966	178	$38,095,226	143
1993	$4,731,794	$23,236,448	298	$34,057,057	156
1994	$4,995,947	$40,894,594	411	$40,827,131	176
1995	$4,846,521	$48,457,085	349	$45,726,961	177
1996	$4,623,498	$73,426,025	521	$46,207,728	166
1997	$4,665,805	$40,147,892	287	$22,332,234	87
1998	$4,298,914	$79,464,744	492	$45,788,396	142
1999	$4,436,700	$45,102,825	328	$22,273,012	94
2000	$4,617,824	$50,446,753	288	$23,946,979	76
2001	$5,246,990	$48,248,631	262	$19,452,033	72
2002	$5,418,347	$41,425,388	253	$15,240,776	61
2003	$5,590,677	$56,138,929	280	$22,060,570	70
2004	$5,761,262	$43,977,388	223	$24,463,425	44
2005	$5,652,957	$50,176,661	435	$38,572,873	180
2006	$5,636,052	$61,821,660	362	$20,552,068	121
2007	$5,799,569	$50,101,,857	565	$33,611,216	182
2008	$6,308,027	$32,301,487	235	$25,304,913	121
2009	$6,642,756	$35,610,136	268	$20,419,443	90
2010	$6,542,426	$90,831,529	444	$46,169,060	164
2011	$6,674,657	$55,331,475	307	$33,684,339	170
2012	$6,456,155	$67,239,975	318	$82,602,227	170
2013	$5,904,676	$110,763,038	1,585	$43,702,549	156
2014	$6,496,135	$37,033,165	330	$26,972,044	124
2015	$6,305,683	$112,888,741	643	$22,782,346	98
2016	$6,368,729	$61,795,122	323	$38,890,529	138
2017	$6,375,692	$56,786,581	355	$21,158,308	82
2018	$6,276,182	$92,522,611	340	$28,901,951	73
2019	$6,217,633	$77,919,700	618	$16,209,401	65
2020	$6,460,073	$70,789,526	399	$17,600,603	53
2021	$6,459,010	$73,918,030	494	$9,965,650	41
2022	$6,379,455	$71,017,189	477	$15,213,830	56
2023	$6,375,918	$90,726,726	471	12,026,037	47
2024	$5,690,122	$137,212,572	1,701	$9,324,668	38
2025	$5,559,507	$99,007,025	854	$9,187,693	34
2026	$5,657,634	$56,024,279	667	$7,677,802	28
2027	$5,628,827	$62,367,008	456	$9,495,396	30
2028	$5,802,782	$58,925,375	396	$10,376,827	33
2029	$5,853,021	$63,229,006	428	$8,284,458	28
2030	$6,082,422	$59,308,613	462	$55,817,048	32
2031	$6,325,683	$51,932,092	374	$57,567,694	23
2032	$6,303,827	$78,134,137	496	$25,294,525	45
2033	$6,316,126	$72,974,549	1,496	$12,011,712	30
2034	$6,265,332	$76,979,266	451	$8,774,314	17
2035	$6,371,723	$71,080,926	420	$8,027,687	18
2036	$6,735,725	$49,298,589	398	$7,639,179	14
2037	$6,300,694	$118,786,136	703	$5,492,801	11

the analysis horizon because of the large number of improvements. Average deck condition rating then decreases over about 20 years and thereafter averages about 6.6 through the end of the analysis horizon. The average superstructure and substructure condition ratings follow the same trend.

The average single-vehicle posting increases from 24.6 tons currently to 30.6 tons in the 1st year because of the large number of improvements. Thereafter, the average single-vehicle posting gradually continues to improve and stabilizes at a level between 32 and 33 tons within the analysis horizon.

From an examination of detailed results for the different cases, the purely economic approach of Case 1 resulted in the lowest cost but had one significant flaw. The purely economic approach results in allowing some low load capacity and

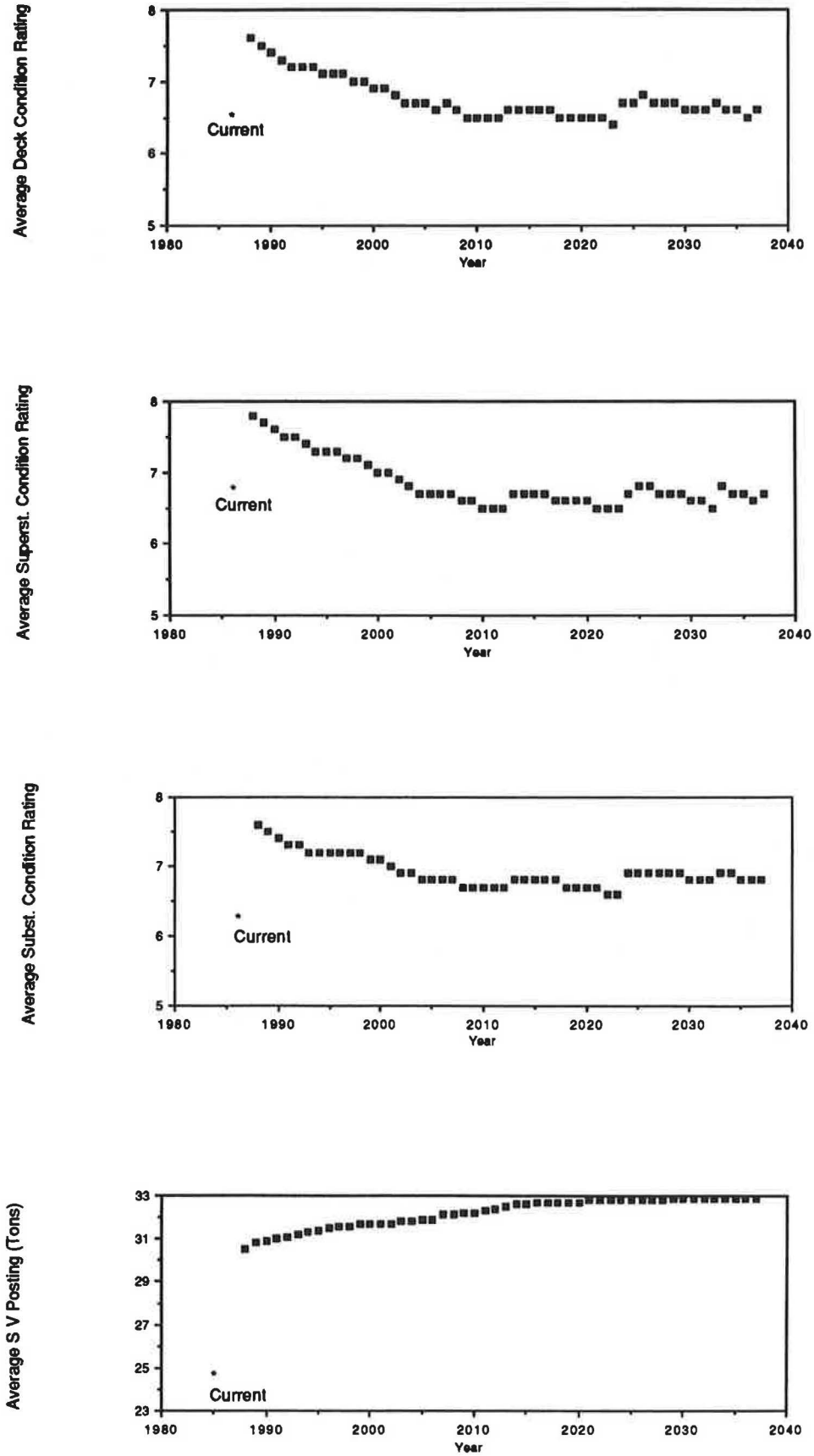

FIGURE 6 Predicted average element conditions and average single-vehicle posting versus year, if funded (Case 2).

otherwise deficient bridges on rural and low-ADT routes to remain in place. In fact, these bridges continue to lose capacity gradually over the years until replacement is mandated by closing.

However, the essence of government involvement in public services suggests that some level of service should be provided for life, safety, opportunity, and access. The acceptable level of service approach represented by Case 2 is somewhat more costly, but it provides reasonable service to all taxpayers, as a minimum. Furthermore, it prevents areas, counties, or regions from being limited in further development prospects because of an inadequate transportation system.

Providing the desirable level of service represented in Case 3 would be an alternate goal. However, the greater funding resources required are less likely to be available. Thus, an approach based on the acceptable level of service may be a reasonable alternative.

Fortunately, most deficient bridges would be selected for improvement under even the purely economic approach. Providing the acceptable level of service as a minimum, in addition, could be achieved for 6 percent more and the desirable level of service for 26 percent more than the purely economic approach for predicted actions over the 50 years.

Any of these approaches will require a substantial increase in funding. However, they can be justified because the user tax increase required would be more than offset by user savings from fewer accidents and detours. Regardless, many of the funding increases will occur as bridges deteriorate to a condition forcing replacement. To improve and maintain the bridge inventory is more cost effective.

CONCLUSIONS

On the basis of the research results presented, the following conclusions can be summarized:

1. A defendable analysis system was developed and implemented for bridge management decision making on the basis of economic analysis that considers both agency and user costs.
2. The analysis system uses engineering data from the NBI Structure Inventory and Appraisal file with some elements added by the North Carolina Department of Transportation (NCDOT) to predict needs on a bridge-by-bridge basis into the future.
3. System-wide needs can be predicted by adding individual bridge needs each year, while system-wide performance can be measured by averaging bridge condition parameters.
4. Future needs and performance are estimated through a bridge-by-bridge simulation of element deterioration and optimum improvement actions each year into the future.
5. Results of system-wide analysis for North Carolina indicate a large backlog of economically justifiable needs. These needs are likely to be even greater because delays in funding will cause increased costs for emergency actions. Additional funds will also be needed for culverts that are not included and for bridge improvements to accommodate additional lanes from traffic planning decisions.
6. The needs predicted would represent a significant increase over current funding levels. Nevertheless, the increased funding indicated represents the lowest cost solution to the public.

REFERENCES

1. Highway Bridge Replacement and Rehabilitation Program. 7th Annual Report of the Secretary of Transportation to the Congress of the United States, Bridge Division, Office of Engineering, FHWA, U.S. Department of Transportation, 1986.
2. *Recording and Coding Guide for the Structure Inventory and Appraisal of the Nation's Bridges*. FHWA, U.S. Department of Transportation, 1979.
3. D. W. Johnston and P. Zia. Level-of-Service System for Bridge Evaluation. In *Transportation Research Record 962*, TRB, National Research Council, Washington, D.C., 1984, pp. 1–8.
4. C. Chen and D. W. Johnston. *Bridge Management Under a Level of Service Concept Providing Improvement Action, Time and Budget Prediction*. Report FHWA/NC/88-004. Center for Transportation Engineering Studies, Department of Civil Engineering, North Carolina State University, Raleigh, Sept. 1987.
5. F. Hanssmann. *Operations Research Techniques for Capital Investment*, John Wiley, New York, 1968.
6. G. W. Smith. *Engineering Economy: Analysis of Capital Expenditures*, 3rd ed. The Iowa State University Press, Ames, 1979.

Publication of this paper sponsored by Committee on Application of Economic Analysis to Transportation Problems.