Sound Barrier Wall Foundations in Granular Material

ALIREZA BOGHRAT

Sound barrier walls are necessary for highways when alignments cross residential areas. Drilled shafts (caissons) are simple foundations for sound barrier walls. Four different design methods for drilled shafts are discussed and compared. All methods result in comparable capacities for shafts up to certain embedment depths, as is indicated by the analysis. Two of the methods, which originally were developed only for level ground, are modified to accommodate sloped ground surfaces.

Sound barrier walls are frequently used for new highway construction. The design and construction of sound barriers are essential when a proposed highway alignment passes residential areas that have no natural noise reduction features. A short drilled shaft is an economical and reliable foundation for sound barrier walls. Shafts are constructed by drilling a hole with the required diameter to the appropriate depth, placing the reinforcing cage in the hole, and filling the hole with concrete. One of the most important characteristics of the concrete (placed by tremie or pumping) is high workability; that is, having a slump of 6 in. or more (*1*).

Short-drilled shafts may be designed as short piles (piles with a length-to-diameter ratio less than or equal to 10). Short piles unrestrained against rotation fail when lateral soil resistance is exceeded and when rigid-body rotation occurs. Various methods of approach to the problem exist, and four different design methods for cohesionless soils are discussed and compared here. These four methods are very simple to use because one is computerized and three are in chart/table form. Two of the presented methods (originally prepared only for level ground surfaces) when modified are also adequate for sloped ground surfaces.

TRR 616 METHOD

The TRR 616 method was developed by Davidson et al. (*2*). The solution is in graph form and is very simple to use. Figure 1 presents the actual and assumed soil resistance distribution at failure. The method does not assume a fixed point of rotation. The study by Davidson et al. (*2*) demonstrated that the rotation point changed from some point below the middle of the shaft embedment distance for light loads to beyond the three-quarter point for failure loads.

Pennsylvania Department of Transportation, Geotechnical Section, Harrisburg, Penn. 17120.

If the principles of statics are applied to the assumed soil pressure distribution, then the following equations can be determined (*2*):

$$S = (\alpha/2)(2X^2 - D^2) \quad (1)$$

$$M = (-\alpha/3)(2X^3 - D^3) \quad (2)$$

where

S = applied lateral load,
M = applied bending moment,
X = unknown distance to the point of rotation,
α = slope of the soil resistance diagram, and
D = embedment depth.

The value of (α) is the same as the one assumed by Broms (*3*) (i.e., passive pressure will act over a width equal to three times the shaft diameter). The only difference is that a soil strength reduction factor (μ) is added to account for the accuracy of the soil strength parameters (*2*).

$$\alpha = 3\gamma B \tan^2(45 \text{ degrees} + \phi/2) \quad (3)$$

where

B = diameter of the drilled shaft,
γ = effective unit weight of the soil, and
ϕ = angle of internal friction.

The value of (μ) can be determined from Table 1. To present the solution in chart form, Davidson et al. used another variable (K), which is the ratio of X to D. Therefore, Equations 1 and 2 were modified to a nondimensional form (*2*).

$$S/\alpha D^2 = K^2 - \frac{1}{2} \quad (4)$$

$$(S/\alpha D^2)(H/D) = \left(-\frac{2}{3}\right)K^3 + \frac{1}{3} \quad (5)$$

where H is a distance that begins at the application point of lateral load to the ground surface.

A graph relates the ($S/\alpha D^2$) to the (H/D) values. The procedure for determining needed resistance is choosing D and determining Su (ultimate capacity) by using Figure 2. Davidson et al. made a comparison of ultimate capacity determined from Figure 2 and from the actual capacity determined from the model and full-scale drilled-shaft tests. Results indicate that the observed mean value of Su is 1.64 times the theo-

retical mean value (*2*) and that a factor of safety equal to 1.64 is already built into the solution and, on the average, the actual *Su* would be 1.64 times the calculated *Su* from the chart.

The design procedure presented in TRR 616 is for level ground, but, with a simple modification, it can be used to determine the actual ultimate value of soil resistance for sloped ground in front of the pile or shaft.

MODIFICATION OF TRR 616 FOR SLOPED GROUND

If the ground surface in front of the sound barrier wall is sloped, then an approximate procedure is to consider only the resistance in the passive zone in front of the drilled shaft or caisson. The assumption is that the soil in the triangle (KLM, Figure 3) does not exist and that only the passive resistance below KL should be used. In reality, the soil in triangle (KLM) will produce some resistance. However, to be more conservative, this resistance is neglected. The value of *A* would be determined from Equation 6.

$$A = (D \tan \theta \times \tan \beta)/(\tan \theta \times \tan \beta + 1) \qquad (6)$$

where θ is the slope angle and $\beta = 45 + \phi/2$.

To use this procedure, a trial *D* is assumed. Then, by using the *H/D* ratio and α, *Su* can be determined from Figure 2. The actual ultimate lateral load would be the determined *Su* times 1.64. Trial *D* should result in an acceptable factor of safety. Of course, the actual embedment of the caisson or pile would be $(D + A)$. The necessary steps to determine ultimate lateral strength by using TRR 616 follow.

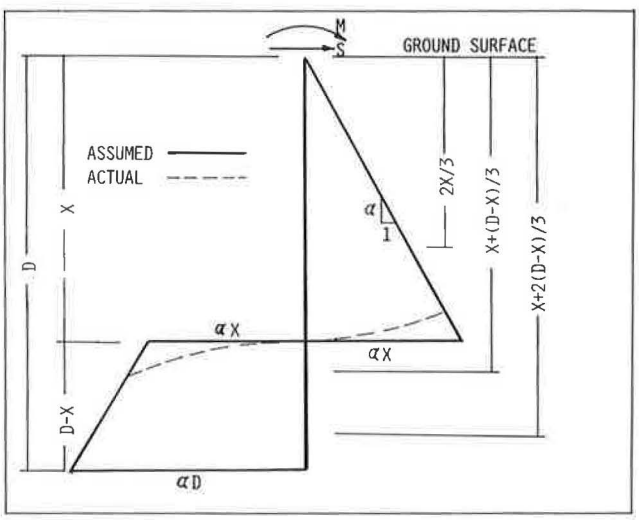

FIGURE 1 Ultimate soil resistance for cohesionless soil (*2*).

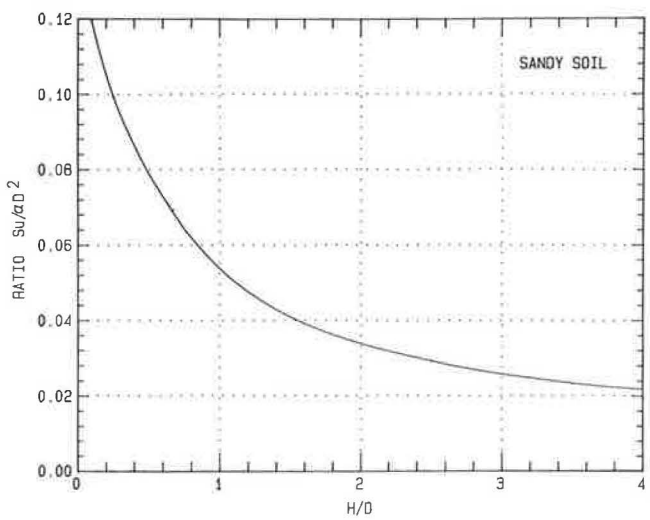

FIGURE 2 Design chart for cohesionless soil (*2*).

TABLE 1 VALUES OF μ FOR DIFFERENT TESTS (*2*)

μ	Quality of Soil Information
0.5	Good visual description possibly supplemented by standard penetration testing in general area.
0.7	Standard penetration testing or other in situ testing at location of structure.
0.9	Laboratory testing at location of structure.

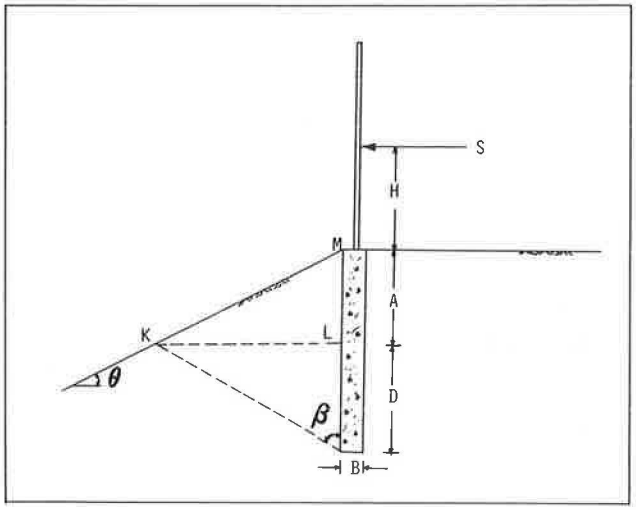

FIGURE 3 Geometry of modification in TRR 616 method for sloped ground.

Level Ground

The same geometry is used as is presented in Figure 10.

Step 1

$Su/\alpha D^2 = 0.049$ (from Figure 2 for $H/D = 1.14$)

Step 2

$\alpha = 3\gamma B \tan^2(45 + \phi/2)\mu$ (use $\mu = 0.8$)

$\alpha = 3(120)(2.0)\tan^2(45 + 30/2)0.8 = 1728$ psf

Step 3

$Su = (0.049(1728)(7)^2 = 4149$ lb

Step 4

Su (actual) $= 4149 \times 1.64 = 6{,}800$ lb

$= 6.80$ kips

Sloped Ground

Assume $D = 3$ ft for first trial and $\mu = 0.8$. (See Figure 4.)
Step 1

$\beta = 45 + 30/2 = 60$ degrees

$\theta = 26.6$ degrees (for 2 : 1 slope)

Step 2

$A = (3 \tan 26.6 \text{ degrees} \tan 60 \text{ degrees})/$

$(\tan 26.6 \text{ degrees} \tan 60 \text{ degrees} + 1)$

$= 1.39$ ft (use $A = 1.5$ ft)

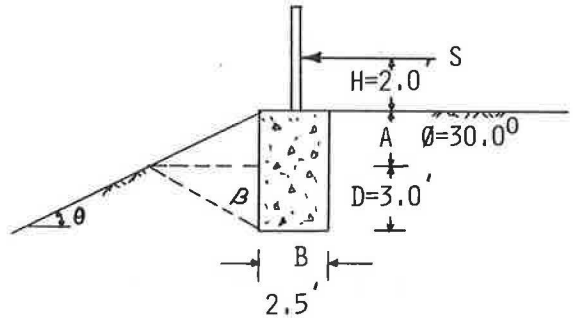

FIGURE 4 Geometry used for TRR 616 method for sloped ground.

Step 3

$Su/\alpha D^2 = 0.07$ (from Figure 2 for $H/D = 0.67$)

Step 4

$\alpha = 3(125)(2.5)\tan^2(45 + 30/2)0.8 = 2250$ psf

Step 5

$Su = (0.07)(2250)(3)^2 = 1420$ lb

Step 6

Su (actual) $= 1420 \times 1.64 = 2{,}330$ lb

$= 2.33$ kips

WOODWARD AND GARDNER METHOD

The ultimate lateral resistance for a drilled shaft or pile with a free-headed condition in cohesionless soil can be determined by using Brom's assumption that the soil passive resistance acts on three times pile diameter (*4*):

$$Su = \left(\frac{1}{2} \times B \times D^3 \times K_p \times \gamma\right)/(H + D) \tag{7}$$

where

$K_p = \tan^2(45 + \phi/2)$

Su from Equation 7 is the actual ultimate resistance. This equation is based only on the passive soil pressure, so the active pressure effect is neglected. If active pressure is also considered from static equilibrium equations, then the value of Su would be

$$Su = \gamma \times B \times D^3\left(\frac{1}{2} \times K_p - \frac{1}{6} \times K_a\right)/(H + D) \tag{8}$$

where

$K_a = \tan^2(45 - \phi/2)$

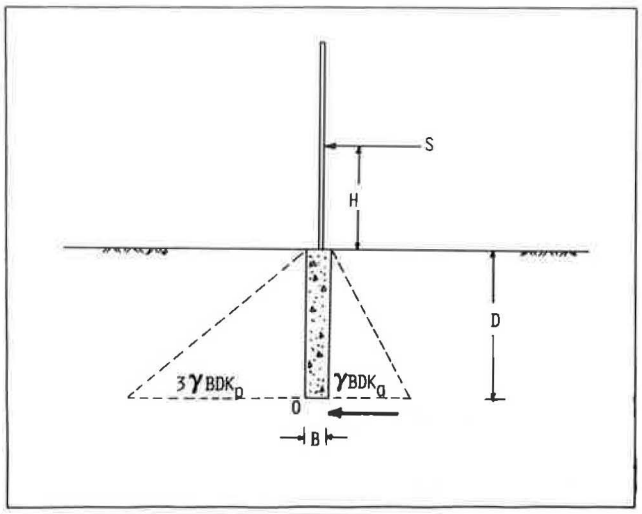

FIGURE 5 Geometry of modification in Woodward and Gardner method for level ground.

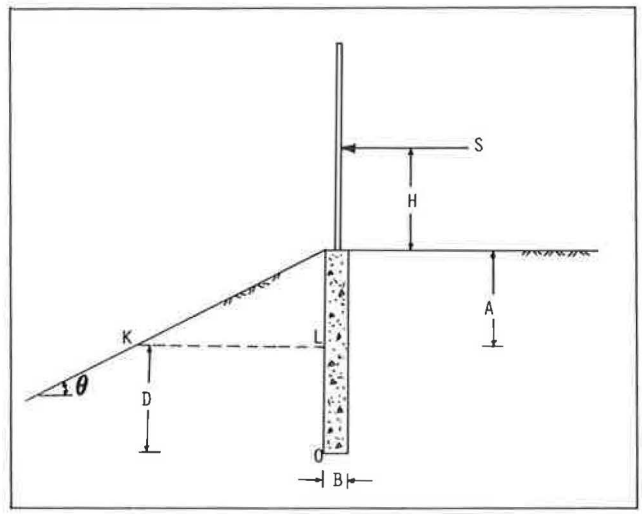

FIGURE 6 Geometry of modification in Woodward and Gardner method for sloped ground.

The calculated *Su* by using Equation 8 would be about 5 percent less than by using Equation 7. Figure 5 presents the geometry of the wall and the pile. High pressures may exist near the toe of the laterally loaded pile. For the purpose of analysis it is assumed that this pressure can be substituted by a concentrated load in Figure 5 (*3*). It also is assumed that active pressure acts only on the width of the pile or caisson. If the ground surface on the front of the wall is sloped, then the following method is proposed as a solution to achieve ultimate lateral capacity.

MODIFICATION OF WOODWARD AND GARDNER METHOD FOR SLOPED GROUND

Equation 6 also can be used to determine the section that is assumed not to contribute to passive resistance. Therefore, the actual depth of embedment would be $(D + A)$. It also is assumed that active soil pressure will act on the entire length of the pile [embedment depth, $(D + A)$] and its diameter and that passive soil pressure will act on (D) and three times the pile diameter. *Su* can be determined by using the equation of equilibrium. Figure 6 shows the geometry of the condition. It should be noted that the unit weight used is the effective unit weight of the material in the affected area.

$$P_a = \frac{1}{2} \times \gamma \times B \times (D + A)^2 K_a \tag{9}$$

$$P_p = \frac{3}{2} \times \gamma \times B \times D^2 \times K_p \tag{10}$$

By taking moments about point 0,

$$Su = \left(\frac{1}{2} \times \gamma \times B \times D^3 K_p - \frac{1}{6} \times \gamma \times B \times (D + A)^3 K_a\right) / (H + D) \tag{11}$$

It is assumed that the material above (KL) does not provide any resistance. Therefore, its effect on calculating passive force is ignored.

This method is also a trial-and-error process. A depth (D) will be assumed, and then *Su* should result in an adequate factor of safety. Again, the actual embedment for the pile would be $(D + A)$.

NEW YORK DEPARTMENT OF TRANSPORTATION METHOD

The New York Department of Transportation method was prepared to design free-headed vertical piles to resist static lateral loads (*5*). The method assumes that the structure rotates as a rigid mass at some depth below the ground surface.

This method considers level and sloped ground surfaces. The solution is in graph and table form. The geometry of the drilled shaft is first drawn. Then, the required values can be determined from related tables and graphs and can be input into the following equation to calculate the *Su* value (*5*).

$$Su = RKYGBD^2 \tag{12}$$

where

- R = resistance coefficient dependent on (H/D) and soil type,
- K = soil strength coefficient dependent on (D/B) and ϕ angle,
- Y = groundwater coefficient dependent on (Z/D) and soil type where Z is the depth to the water table, and
- G = ground slope coefficient dependent on the direction of the wind load.

B and D values are diameter (or width) and depth of the drilled shaft, respectively. Graphs and tables used in determining different coefficients are presented in Figures 7–9 and Table 2.

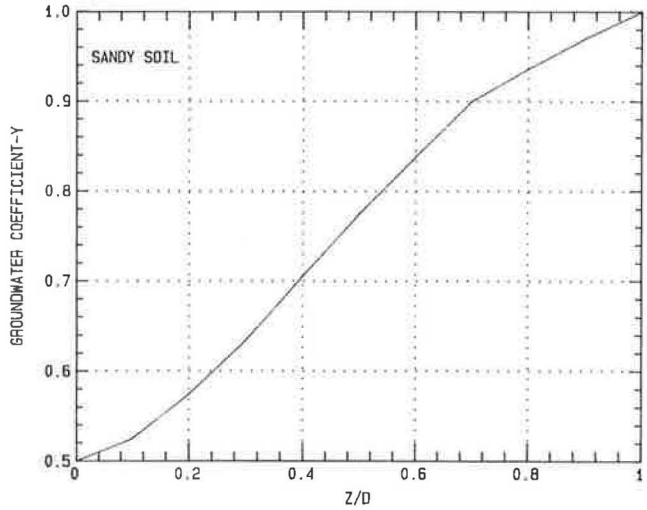

FIGURE 7 Ground water coefficient (*Y*) for use in the New York method (*5*).

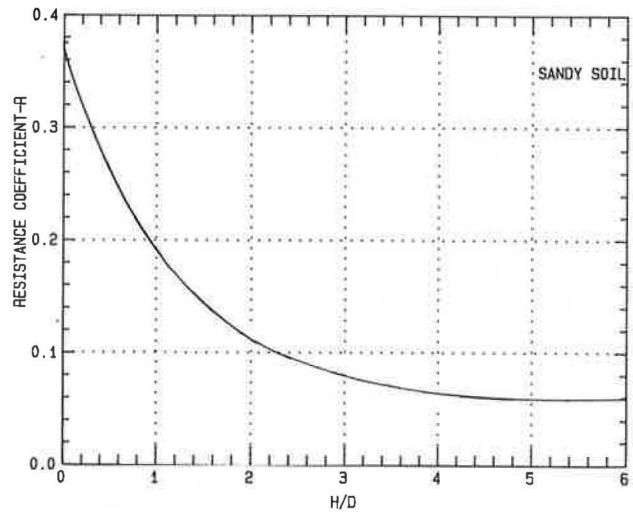

FIGURE 8 Resistance coefficient (*R*) for use in the New York method (*5*).

Some of the tables and plots are presented in this paper. However, for design purposes, the actual report that covers different soil types, effect of wall and pile weight, and other loading conditions should be used. A step-by-step solution, using this method, follows.

Level Ground

See Figure 10 for geometry.

Here, $m = n =$ level.

Step 1

$H/D = 8/7 = 1.14$ and $D/B = 7/2 = 3.5$

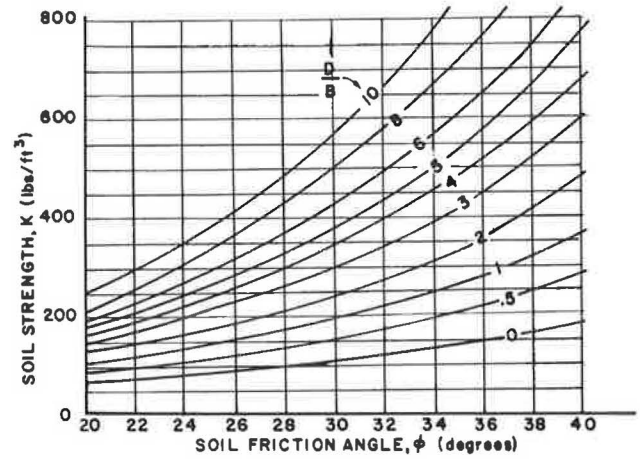

FIGURE 9 Soil strength coefficient (*K*) for use in the New York method (*5*).

Step 2

$G = 1$ (from Table 2 for $m = n =$ level)

Step 3

$Y = 1$ (from Figure 7 for $Z/D = 1$)

Step 4

$R = 0.18$ (from Figure 8 for $H/D = 1.14$)

Step 5

$K = 325$ (from Figure 9 for $D/B = 3.5$ and $\phi = 30$ degrees)

Step 6

$$Su = RKYGBD^2$$
$$= (0.18)(325)(1)(1)(2)(7)^2$$
$$= 5733 \text{ lb}$$
$$= 5.73 \text{ kips}$$

where

H = from top of pile to the actual point of loading,
D = embedment depth,
B = pile width or diameter,
m = average ground slope for a distance of $2D$ in front of pile loading,
n = average ground slope for a distance of $2D$ behind pile loading, and
Z = depth to water table.

TABLE 2 GROUND SLOPE COEFFICIENT, G, USED IN NEW YORK METHOD (*5*)

M \ N	-2	-3	-4	LEVEL	+4	+3	+2
-2	0.37	0.42	0.45	0.48	0.53	0.56	0.60
-3	0.46	0.55	0.58	0.60	0.66	0.70	0.75
-4	0.52	0.60	0.64	0.70	0.75	0.78	0.83
LEVEL	0.63	0.77	0.85	1.00	1.10	1.14	1.16
+4	0.73	0.90	1.10	1.27	1.55	1.64	1.67
+3	0.80	1.05	1.15	1.37	1.69	1.80	1.92
+2	1.00	1.10	1.20	1.50	2.00	2.15	2.46

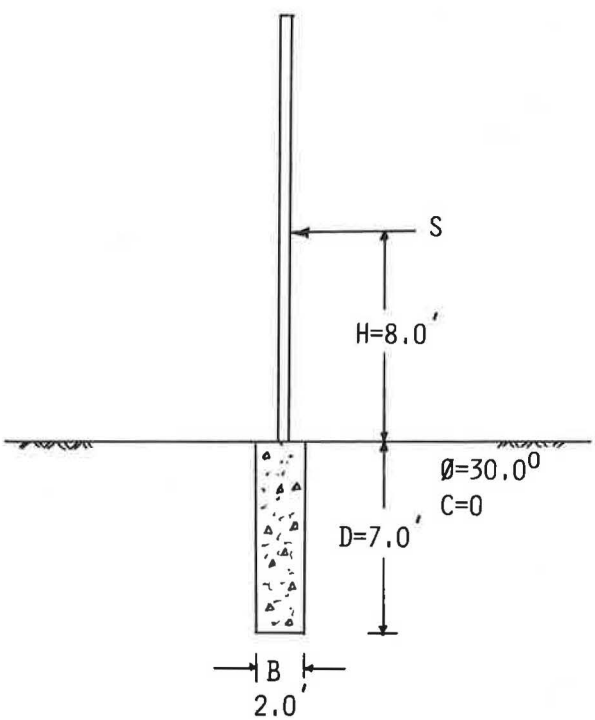

FIGURE 10 Geometry used for New York method for level ground.

Sloped Ground

See Figure 11 for geometry.
Step 1

$H/D = 2/4.5 = 0.44$ and $D/B = 4.5/2.5 = 1.8$

Step 2

$G = 0.48$ (from Table 2 for $m = -2$ and $n =$ level)

Step 3

$Y = 1.0$ (from Figure 7 for $Z/D = 0$)

Step 4

$R = 0.27$ (from Figure 8 for $H/D = 0.44$)

Step 5

$K = 240$ (from Figure 9 for $D/B = 3.5$ and $\phi = 30$ degrees)

Step 6

$$Su = RKYGBD^2$$
$$= (0.27)(240)(1)(0.48)(2.5)(4.5)^2$$
$$= 1575 \text{ lb}$$
$$= 1.58 \text{ kips}$$

where

$m = -2$ (− indicates sloping downward) (+ indicates sloping upward) and
$n =$ level.

NORTH CAROLINA METHOD

The North Carolina method was prepared for FHWA by Roy H. Borden and M. Gabr of North Carolina State University (*6*). They studied the base resistance contribution to the ultimate load capacity of the drilled pile or shaft. For D/B ratios greater than 4, the base resistance accounts for less than a 15 percent increase in capacity. But, the importance of the base resistance increases as the D/B ratio decreases. Borden and Gabr determined that for a D/B ratio of 2.5 the capacity could be underpredicted by as much as 25 percent if the base

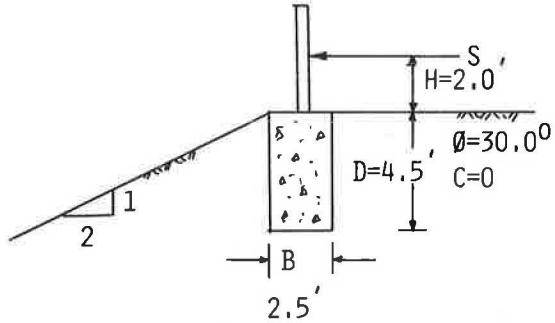

FIGURE 11 Geometry used for New York method for sloped ground.

resistance is not included (*6*). The method is computerized, and the software is called LTBASE (Lateral Pier Analysis Including Base and Slope Effect). The method uses a three-dimensional force equilibrium model to determine the ultimate lateral capacity of the piles in both cohesionless and cohesive soils.

The program is user friendly. The input data include job description and location, loading conditions, piles dimensions, soil properties, and slope effect. After the data are executed, the results are directed to three output files (*6*):

- OUTPUT PRN: Presents information about critical input data and output results for all loading increments used in the analysis.
- SUMMARY PRN: Presents a summary of applied loads, input soil properties, and pile dimensions. The computed factor of safety that depends on the predicted capacity is printed when appropriate.
- PLOT PRN: Presents special information for using output results in association with any graphic software package to produce a load-deflection plot.

This method was used to determine ultimate load capacity of piles with different embedment depths and widths in granular material. The Borden and Gabr report contains the assumption used in reaching the design procedure, modeling and equations, plus step-by-step directions for using the computer program.

WIND PRESSURE

The wind pressure can be determined by using the following equation (*7*).

$$Pw = (.003)V^2 \tag{13}$$

where Pw is the wind pressure in pounds per square foot and V is the wind velocity in miles per hour.

Wind pressure, which is assumed to act horizontally, is calculated for the entire area of the sound barrier wall. The area of a sound barrier panel is the spacing between two drilled shafts multiplied by the height of the wall. Wind moment is calculated with respect to the top of the drilled shaft.

A 25-psf wind pressure, which corresponds to a 90-mph wind (a wind velocity of not less than 75 mph is ordinarily used by designers), is usually used as the maximum wind pressure. If the local wind pressure is larger than this value, then the actual maximum wind pressure should be used in calculating wind load on the sound barrier wall. A reliable factor of safety against foundation failure of sound barrier walls is 2.0.

COMPARISON OF THE FOUR DESIGN METHODS FOR LEVEL SURFACE

The four methods were used to evaluate the capacity of some rigid piles. Also, the factor of safety for an applied wind load was determined for each procedure. In Table 3, A means New York Method (NYM); B, modified for slope or regular TRR 616 method (TRRM); C, modified for slope or regular Woodward and Gardner method (MWGM); and D, North Carolina method (NCM).

As can be seen from Table 3, NCM predicts the smallest capacities and MWGM predicts the largest values. The table indicates that MWGM values are about 25 percent larger

TABLE 3 COMPARISON OF FOUR DIFFERENT METHODS FOR LEVEL GROUND

EMBEDMENT DEPTH D-FT	PILE WIDTH B-FT	WIND LOAD (KIPS)	PILE CAPACITY Su - (KIPS) A	B	C	D	FACTOR OF SAFETY A	B	C	D
7.0	2.0	7.0	5.73	6.80	7.39	5.81	0.82	0.97	1.13	0.83
10.0	2.0	7.0	14.44	17.56	19.27	13.86	2.06	2.51	2.75	1.98
12.0	2.0	7.0	26.00	28.57	29.96	22.19	3.71	4.08	4.28	3.17

when compared with other methods. Therefore, the NYM, TRRM, and NCM methods are compatible when designing rigid pile foundations for sound barrier walls on level ground in cohesionless soils.

The results are also presented in graph form in Figure 12. All those methods follow the same trend, but MWGM values are always larger than all other values. The calculated values of the ultimate capacity load are graphically closer for smaller embedment depths. However, they become farther apart as depths increase.

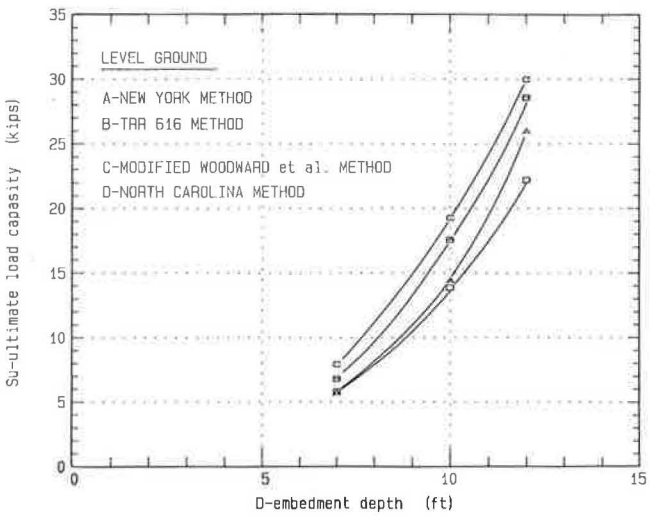

FIGURE 12 Plot of ultimate load capacity versus depth for different design methods (level ground).

COMPARISON OF THE FOUR DESIGN METHODS FOR A 2 : 1 SLOPE

The NYM and NCM are suitable for level and sloped ground. As was previously mentioned, TRR 616 and Woodward and Gardner methods were modified to handle sloped surfaces in front of sound barrier walls. The four methods were used to calculate ultimate load capacity for different drilled shaft embedment depths where the front of the wall is sloped 2 : 1 (θ = 26.6 degrees). The results are presented in Table 4.

The value of actual embedment (D) is plotted versus ultimate load capacity (Su) in Figure 13. The predicted values of Su from all four methods are very close for embedments up to 15 ft.

Su values from NYM are smaller than those from all other methods for embedment depths up to 9 ft. For embedments larger than 15 ft, the NYM-predicted Su values become much larger than those from the other three methods. It could be concluded that Su from the four methods are comparable for embedments up to 15 ft. However, for larger D values, NYM overestimates the ultimate load capacity. For embedment depths larger than 15 ft, the other three methods would result in similar values.

COMPARISON OF THE FOUR DESIGN METHODS FOR A 3 : 1 SLOPE

Ultimate load capacity was also determined from those four methods for a 3 : 1 slope (θ = 18.43 degrees). The results are presented in Table 5. Moreover, the actual embedment

TABLE 4 COMPARISON OF FOUR DIFFERENT METHODS FOR A 2 : 1 SLOPE

ACTUAL EMBEDMENT (D+A) - FT	D FT	PILE WIDTH B-FT	WIND LOAD (KIPS)	PILE CAPACITY Su - (KIPS) A	B	C	D	FACTOR OF SAFETY A	B	C	D
4.5	3.0	2.5	1.20	1.57	2.33	1.85	2.69	1.31	1.94	1.85	2.24
6.0	4.0	2.5	1.80	2.70	3.90	3.76	2.77	1.50	2.16	2.09	1.54
7.5	5.0	2.5	2.70	4.66	5.54	5.40	6.05	1.73	2.05	2.00	2.24
12.0	8.0	2.5	4.80	14.26	13.22	13.14	13.92	2.97	2.76	2.74	2.90
15.0	10.0	2.0	7.0	22.80	18.14	17.53	21.28	3.26	2.59	2.50	3.04
18.0	12.0	2.0	7.0	42.86	28.57	27.26	31.57	6.12	4.08	3.89	4.51
21.0	14.0	2.0	7.0	68.60	42.21	39.35	42.77	9.80	6.03	5.62	6.11

depth values are plotted versus the ultimate load capacity and presented in Figure 14.

Results indicate that NYM values are again smaller for embedments up to 9 ft. Also, *Su* values are very close for embedments up to 15 ft. Again, when *D/B* ratios become close to 10, NYM values become much larger than the others. Overall, the values from TRRM, MWGM, and NCM remain close.

The same results are concluded for a 3 : 1 slope for embedment depths up to 15 ft; that is, all four methods result in comparable values. But NYM overestimates the ultimate capacity for depths above 15 ft.

It should be noted that only TRRM considers a reduction factor (μ) to account for reliability of soil strength parameters. Therefore, when using the other three methods the reliability of soil parameters should be considered by using a larger factor of safety. A simple procedure is to divide the appropriate factor of safety by (μ) from Table 1 to determine the required factor of safety.

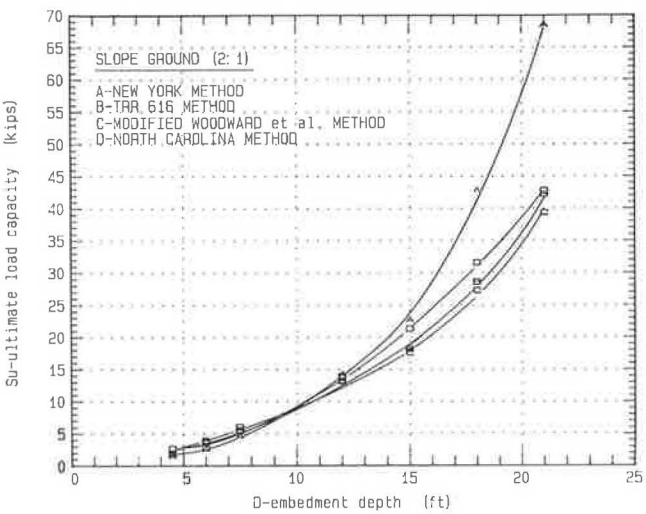

FIGURE 13 Plot of ultimate load capacity versus depth for different design methods (2 : 1 slope).

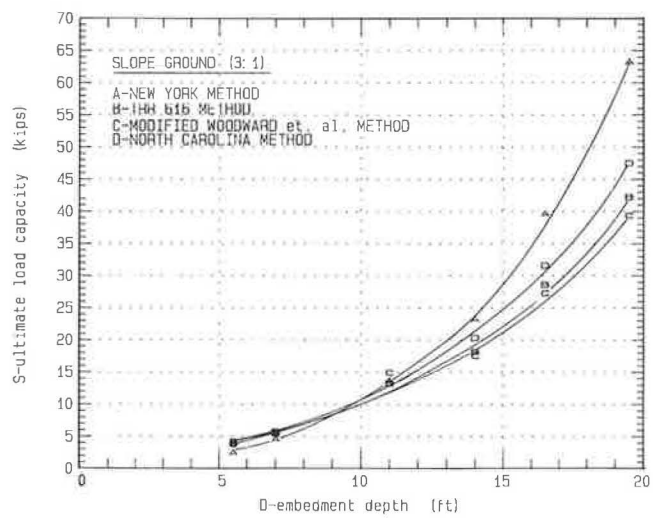

FIGURE 14 Plot of ultimate load capacity versus depth for different design methods (3 : 1 slope).

TABLE 5 COMPARISON OF FOUR DIFFERENT METHODS FOR A 3 : 1 SLOPE

ACTUAL EMBEDMENT (D+A) - FT	D FT	PILE WIDTH B - FT	WIND LOAD (KIPS)	PILE CAPACITY Su - (KIPS) A	B	C	D	FACTOR OF SAFETY A	B	C	D
5.5	4.0	2.5	1.8	2.51	3.90	3.76	4.16	1.40	2.16	2.09	2.31
7.0	5.0	2.5	2.7	4.63	5.54	5.40	5.70	1.72	2.05	2.00	2.11
11.0	8.0	2.5	4.8	13.72	13.22	14.90	13.30	2.86	2.76	3.11	2.77
14.0	10.0	2.0	7.0	23.26	18.14	17.53	20.30	3.32	2.59	2.50	2.90
16.5	12.0	2.0	7.0	39.67	28.57	27.26	31.57	5.67	4.08	3.89	4.51
19.5	14.0	2.0	7.0	63.31	42.21	39.35	47.46	9.04	6.03	5.62	6.78

CONCLUSIONS

1. The four design procedures result in close values of ultimate soil resistance for drilled piles supporting sound barrier walls constructed on level ground.
2. The TRR 616 and Woodward and Gardner methods were originally prepared for level ground surfaces but, with some modification, can also be used to determine *Su* for sloped ground surfaces.
3. All four methods result in relatively close *Su* values for embedment depths of up to 15 ft in sloped ground.
4. For embedment depths larger than 15 ft, the New York method estimates higher ultimate soil resistance than the other three methods.
5. If the embedment depth is larger than 15 ft, then the predicted value of *Su* from TRRM, MWGM, and NCM are very close.
6. The same soil parameters and reliability on those parameters should be used when comparing the four methods.

ACKNOWLEDGMENT

The author thanks the Pennsylvania Department of Transportation for providing the opportunity to conduct this study.

REFERENCES

1. *Drilled Shafts*. FHWA-HI-88-042, FHWA, Department of Transportation, 1988.
2. J. L. Davidson, C. O. Hays, and E. M. Hagan. Design of Drilled Shafts Supporting Highway Signs. In *Transportation Research Record 616*, TRB, National Research Council, Washington, D.C., 1976, pp. 62–66.
3. B. B. Broms. Lateral Resistance of Piles in Cohesionless Soils. *Journal of Soil Mechanics and Foundation Division*, ASCE, Vol. 90, No. SM3, 1964, pp. 123–156.
4. R. J. Woodward, W. S. Gardner, and D. M. Greer. *Drilled Pier Foundation*. McGraw-Hill, New York, 1972.
5. R. P. Ungerer. *Procedures for Analyzing Pole Foundations to Resist Horizontal Loads*. Report FHWA/NY/SR/86/86, New York Department of Transportation, Albany, N.Y., 1986.
6. R. H. Borden and M. A. Gabr. *Computer Program for Laterally Loaded Pier Analysis Including Base and Slope Effects*. Report FHWA/NC/87-001, FHWA, North Carolina Department of Transportation, Raleigh, N.C. 1987.
7. F. D. Henry. *The Design and Construction of Engineering Foundation*. McGraw-Hill, New York, 1956.

Publication of this paper sponsored by Committee on Foundations of Bridges and Other Structures.