Evaluation and Load Testing of a 100-Year-Old Elevated Steel Transit Structure

S. G. PINJARKAR, R. W. KRITZLER, R. A. ROLSING, AND P. O. MCCARTHY

Full-scale diagnostic load tests were performed on a typical single-span structure as part of a pilot test program for the Engineering Condition Assessment of the Chicago Rapid Transit System. The purpose of the load testing was to evaluate the actual behavior of a 100-year old elevated steel structure under train loading. Measured static and dynamic responses to train loads were used to evaluate impact loading, and to establish methodology for fatigue life assessment. Tests were also performed to evaluate longitudinal braking forces at the support columns, and recent modifications made to the stringer bracing system. The Chicago Transit System includes approximately 40 miles of elevated steel structures and bridges. The results of the pilot test program were used to develop an expanded test program for an overall condition assessment of the entire elevated transit support system.

The static load tests were performed by stopping a test train at known positions along the track structure. Strains and deflections were measured at critical locations in the stringers, columns and cross-bracing members. The dynamic tests were performed by moving a test train across a test span at crawl speed and at various operating speeds. Strains were measured in the stringers during movements of the test train and in-service trains. Dynamic tests were also performed by braking the moving test train to evaluate the effects of both normal and emergency braking.

The test data showed the average measured impact loading to be 5 to 10 percent, as compared with the code design impact of 55 percent. The braking and stopping of the test train caused bending stresses in the columns approximately equal to the column axial stress. The new stringer cross-bracing was found to be effective in distributing train loads from one track to all four stringers supporting both tracks, causing significant uneven distribution to the two stringers supporting the loaded track.

INTRODUCTION

Full-scale nondestructive diagnostic load testing was conducted on the elevated steel structure located on the Southside Main Line of the Chicago Rapid Transit System. The load tests were performed as part of a pilot program for the overall Engineering Condition Assessment of the Chicago Rapid Transit System, which includes approximately 40 miles of elevated steel structures and bridges. The original foundations and elevated steel structures were designed and built during the early 1890's for the 1893 Chicago Columbian Exposition. The transit trains were originally powered by small steam locomotives. The system was later converted to lighter electric-powered cars.

S. G. Pinjarkar and R. W. Kritzler, Raths, Raths & Johnson, Inc., Willowbrook, Illinois
R. A. Rolsing, McDonough Associates, Inc., Chicago, Illinois
P. O. McCarthy, H. W. Lochner, Inc., Chicago, Illinois

Diagnostic load testing was used to supplement the engineering analyses and rating calculations made to evaluate behavior of the steel structure supporting the tracks. Static and dynamic load tests were conducted using a special test train and also normal in-service train movements. Load testing reduced the uncertainties in the assumptions made for analytical rating by measuring the actual response of the structure to static and dynamic train loads. The diagnostic type of nondestructive load test is generally performed to determine response characteristics of a structure. These characteristics are then used to determine the load rating by analytical methods, as described in Reference [1].

Description of Test Program

The load testing was conducted on a typical single span located between Bents 595 and 596 just north of 45th Street (*Figures 1 through 4*). The test span consisted of four simple-span, open-deck stringers, with bottom end bearing on steel bents 53 feet-6 inches center to center, supporting two standard-gage tracks on timber ties. The stringers had been recently retrofitted with new flange angles fastened to the original web with high-strength bolts. In addition, the stringer bottom lateral system had been removed and vertical cross-bracing installed (*Figure 4*) between all four stringers. In general, all tests were

Figure 1. View of Elevated Structure, Test Span Left of Center

Figure 2. View of Tracks Along Test Area

Figure 3. View of Static Load Test

performed using an empty four-car test train which represented approximately 80 percent of the total train load including passenger loading. The empty test train was found to be more suitable for calibration because of known axle weights.

The static load test was performed by stopping an empty four-car test train at known positions along the track structure. Stresses (strains) were measured at critical locations in the stringers, columns, and cross-bracing members (*Figure 5*). Vertical deflections were measured at the span center for each stringer.

The dynamic tests were performed by moving the test train across the test span at crawl speed and at various operating speeds. Strains were measured in the stringers to evaluate dynamic load effects (impact factor) and to determine actual variable amplitude stress cycles for fatigue evaluation. Dynamic tests were also performed by stopping the moving test train on the test span to determine the effects of braking, and to compute the approximate magnitude of longitudinal forces caused by braking action. Additional dynamic tests were performed by monitoring strains during normal in-service train movements across the test span. The tests were conducted on Sunday afternoon, during off-peak hours, to evaluate the test methods. Future in-service testing will be performed during peak traffic hours.

Figure 4. View from Below Test Span Structure

The measured strains (converted to stresses) and deflections were plotted to evaluate the track structure response under train loading. Test results were reviewed for consistency and symmetry, and compared with calculated values. The results of this pilot test program were used as a basis for developing an expanded load testing program for use in the overall condition assessment of the entire elevated transit support system.

STATIC LOAD TEST

The static load testing consisted of measuring and recording strains and deflections for a four-car test train stopped at seventeen known positions along the east and west tracks of the elevated structure (*Figure 3*). An empty four-car test train was provided by the Chicago Transit Authority (CTA) (*Figure 6*). A single empty test car weighed approximately 54,400 pounds, with an approximate axle load of 13,600 pounds, and an overall length of 48 feet (*Figure 6*). The test train positions were established to locate the centerline of the car axle groups over the test span quarter points, midspan, and end support bent. The train lead axle was used to stop the train at pre-selected positions along each track.

Instrumentation

Eighteen 1-inch long electrical resistance strain gages were installed on the test span and bent (*Figure 5*) to monitor

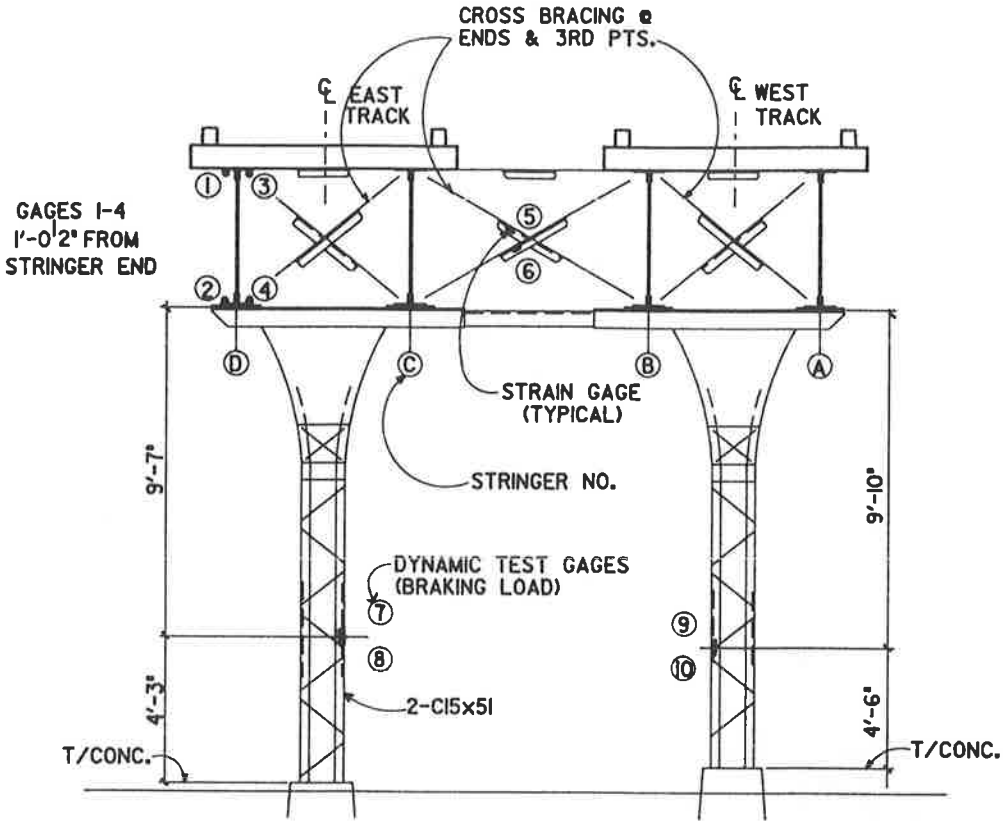

CROSS SECTION AT BENT 595

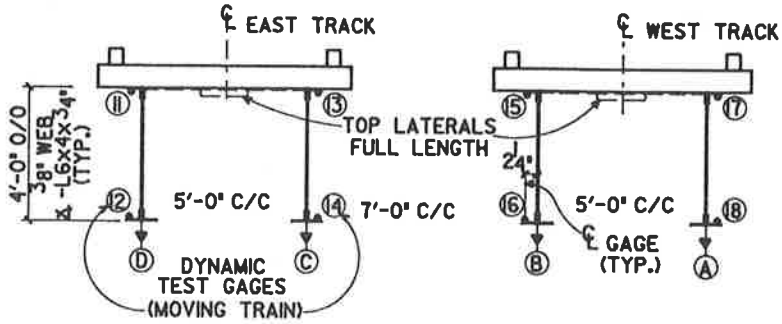

CROSS SECTION AT MIDSPAN 595-596

• DENOTES LONGITUDINAL STRAIN GAGE

▾ DEFLECTION MEASURED W/ SUSPENDED TARGET

Figure 5. Instrumentation

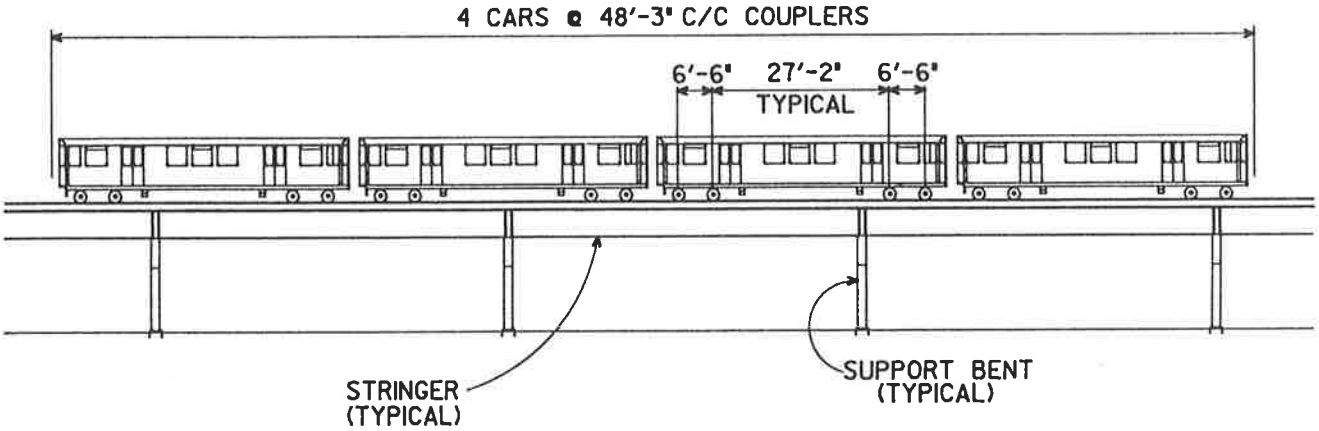

Figure 6. Elevation of Four-Car Test Train

structural behavior during the load test. Strain gages were installed to measure maximum bending stresses at midspan (top and bottom flange) of the stringers and also at the ends of the stringers. In addition, strain gages were installed on two of the columns and on several cross-bracing members.

The strain gages were wired to eighteen completion circuits, a DC power supply, and a scanning digital voltmeter. The eighteen channels were read and recorded using an automatic data acquisition system, composed of a scanner and a portable computer. Measured strains were converted to equivalent stresses, printed out on paper, and recorded on magnetic diskette for each test train position.

Vertical deflections were measured at midspan for all four stringers, for each train position, using suspended targets and a precision level. The recorded stress and deflection data were later plotted for study and evaluation.

Results

A1. The maximum bottom flange bending stress in the outside stringer, at midspan under static loading of the test train, was found to be in the range of 3.9 to 5.3 ksi. The corresponding maximum bottom flange bending stress in the interior stringer was found to be in the range of 2.4 to 3.2 ksi. The maximum stresses were recorded when groups of axles at the car ends were located at midspan. As shown *(Figure 7)*, the maximum recorded midspan bending stress was 5.3 ksi when the third axle group, composed of the second car rear axles and the third car front axles, was located at midspan.

A.2 The calculated maximum stress in the track stringers, based on measured cross-section and equal load distribution to the two loaded stringers, was 4.1 ksi. The calculated maximum stress in the outside stringer was 4.5 ksi, based on load distribution to the stringers by rigid body rotation of the four-stringer group. A comparison of measured and calculated stresses is summarized for Test Train Position 11 *(Table 1)*.

A.3 The midspan deflection measurements made during the static testing were consistent with the flexural behavior of the stringers *(Figure 8)*. As shown, the maximum recorded deflection of the outside stringer was 0.28 inch. The corresponding maximum deflection, at the interior stringer was 0.22 inch. The calculated maximum deflection in the outside stringer is 0.28 inch. A comparison between measured and analytically-predicted deflections showed good correlation *(Table 2)*.

A.4 The cross-bracing between the stringers was found to be effective in distributing loads from one track to all four stringers. Both the strain and deflection test data showed the four stringers to rotate (twist) as a unit under load from one track *(Tables 1 and 2)*. The behavior of the four stringers, as one unit, caused significant uneven distribution of train load to the two stringers supporting the loaded track. In addition, there were significant shifts in the load distribution to the stringers between each static and dynamic test train run.

A.5 The measured live load bending stresses in the outside stringer were generally 25 to 40 percent greater than the interior stringer for the static and dynamic tests. One static test (East Run A) indicated the measured stress in the outside stringer was 110 percent greater (5.3 ksi versus 2.5 ksi) than the interior stringer *(Figure 7)*. Evaluation of the bottom flange stresses for this test showed consistently higher load distribution to the outside stringer, and lower load distribution to the inside stringer than other static and dynamic test runs *(Table 1 and Figures 9 and 10)*. The variation in load distribution may be attributed to residual stresses caused by (i) connection slippage, (ii) stringer bearing restraint, and (iii) foundation movement.

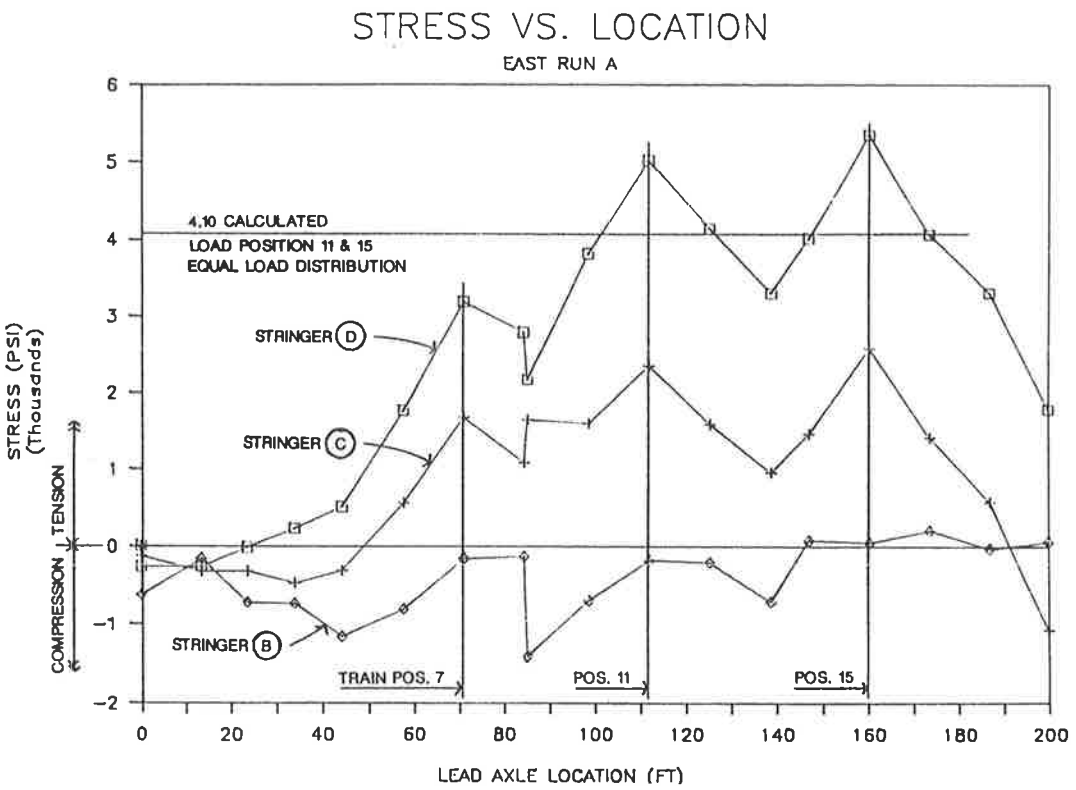

Figure 7. Test Train Static Testing
Stringer Bottom Flanges at Midspan

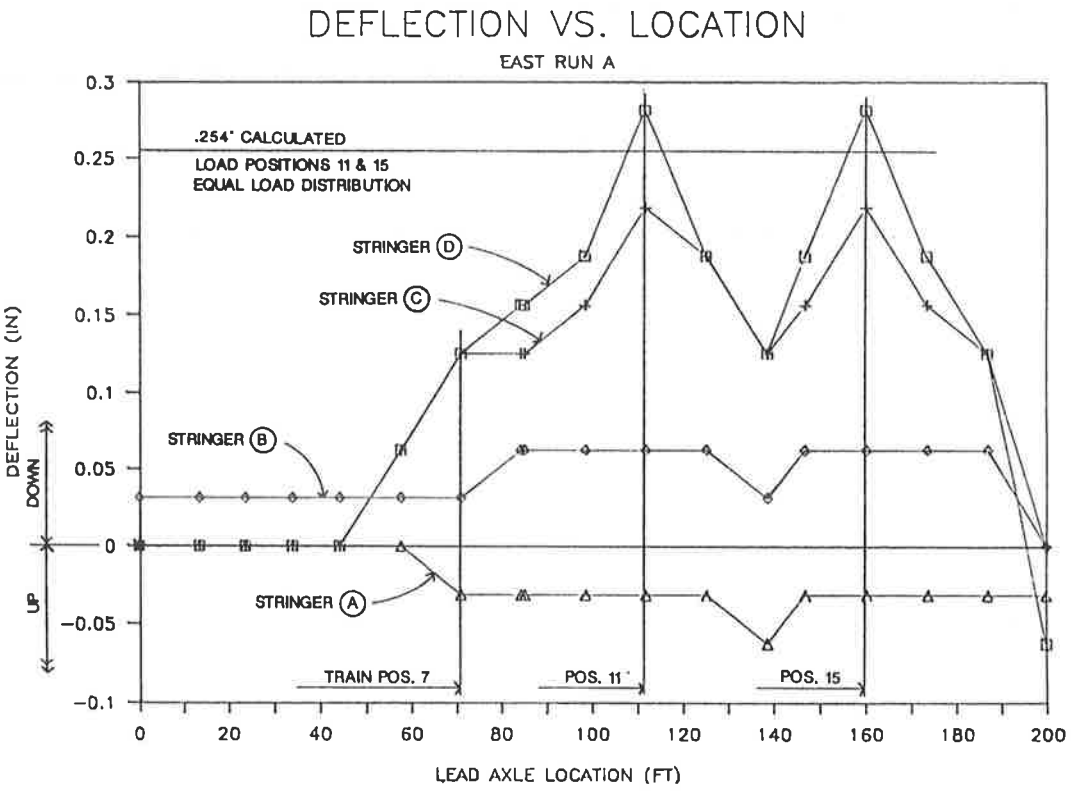

Figure 8. Test Train Static Testing
Stringers at Midspan

TABLE 1
COMPARISON OF CALCULATED AND MEASURED STRESS
STRINGER BOTTOM FLANGES AT MIDSPAN - TEST TRAIN AT EAST TRACK POSITION 11

Stringer	D	C	B	A	Avg. D & C
Calculated Stress					
Equal Load Distrib. to East Track Stringers	4.1	4.1	0.0	0.0	4.1
Load Distrib. by Rigid Body Rotation of 4-Stringer Group	4.5	3.1	1.0	-0.4	3.8
Measured Stress					
Before East Run A	3.9	3.1	0.3	*	3.5
East Run A	5.0**	2.4	-0.2	*	3.7
East Run B	4.1	3.2	0.0	*	3.6
East Run C	4.4	3.2	*	*	3.8

* Test data incorrect due to bad gage circuit or local two-way radio noise.
** Maximum stress of 5.3 ksi measured at Position 15.

TABLE 2
COMPARISON OF CALCULATED AND MEASURED DEFLECTION
STRINGERS AT MIDSPAN

Stringer	D	C	B	A
Test Train at East Track Position 11				
Calc. Deflection (in.):				
Equal Distrib. - 2 Stringers	0.25	0.25	0.00	0.00
Load Distrib. - 4 Stringers (1)	0.28	0.19	0.06	-0.03
Measured Deflection (in.)	0.28	0.22	0.06	-0.03
Test Train at West Track Position 11				
Calc. Deflection (in.):				
Equal Distrib. - 2 Stringers	0.00	0.00	0.25	0.25
Load Distrib. - 4 Stringers (1)	0.03	0.06	0.19	0.28
Measured Deflection (in.)	-0.06	0.06	0.25	0.31

(1) Load distributed by rigid body rotation (twist) of 4-strtinger group.

A.6 The measured axial stresses in the stringer center cross-bracing, located above the end support bent (*Figure 1*), indicated resistance to the rotation of the four-stringer group. The maximum measured stress was 2.4 ksi, and occurred when the train car axle groups were centered at midspan.

DYNAMIC LOAD TEST

The dynamic load testing included three parts. The first part consisted of recording stringer bottom flange stresses during test train movements across the test span at various speeds: 3.0, 7.4, 21.1 and 33.7 miles per hour (mph). The second part consisted of recording column flange stresses during test train braking and stopping while moving across the test span. The train was stopped using normal braking by the motorman, and then was stopped using full emergency braking (including track brake). The third part consisted of recording stringer bottom flange stresses during two in-service train movements across the test span at 27 and 41 mph. The results of dynamic tests performed for stringer bending stresses are summarized in *Table 3*.

Instrumentation

Instrumentation to measure dynamic response included two strain gages wired to two completion circuits, a DC power supply, a two-channel digital oscilloscope, and a portable computer. The two channels were read and recorded using the oscilloscope and computer. Measured strain records for each train movement were recorded on magnetic diskette and also by Polaroid photographs of oscilloscope screen plots. The measured strains were converted to equivalent stresses, and later plotted for study and evaluation (*Figures 9 through 12*).

Results

B.1 The impact factor was measured to be approximately 5 to 10 percent for the test train movements and in-service train movements recorded. The maximum stringer bottom flange stress, under the moving test train, was 4.5 ksi and, under two moving in-service trains, was 4.6 ksi (*Table 3*).

B.2 The impact factor is considered to be the increase in stringer flexural stress due to the dynamic effect of moving train loads. Several definitions have been used in various

TABLE 3
DYNAMIC TESTING
SUMMARY OF MEASURED DYNAMIC EFFECTS
GAGE 12 - OUTSIDE STRINGER, BOTTOM FLANGE AT CENTER SPAN

Train Type (1)	Train Speed (1a)	Max. Approx. Static Stress (2) (KSI)	Peak Dynamic Stress (3) (KSI)	Measured Percent Impact (4) (%)	Max. Dyn. Response Amplitude (5) (KSI)	Percent Impact (6) (%)
Test	0.0	3.9	3.9	-	-	-
Test	7.4	4.1	4.1	0.0	0.0	0.0
Test	3.0	4.1	4.1	0.0	0.0	0.0
Test	21.1	4.2	4.5	7.1	0.25	6.0
Test	33.7	4.2	4.4	4.8	0.39	9.3
Test	0.0	4.2	4.2	-	-	-
Normal	27	4.1	4.4	7.3	0.35	8.6
Normal	41	4.4	4.6	4.5	0.14	
					0.18	
					0.32 (total)	7.3

(1) Test denotes 4-car test train; Normal denotes normal in-service train movements (both 4-car trains).
(2) Maximum value of static response curve fit to median values of dynamic response (Figure 11).
(4) [(3) - (2)] / (2) * 100 definition of impact by peak dynamic response.
(5) Maximum dynamic amplitude of stress oscillations along peak segments of dynamic response (Figure 11).
(6) (5) / (2) * 100 definition of impact by dynamic oscillation.

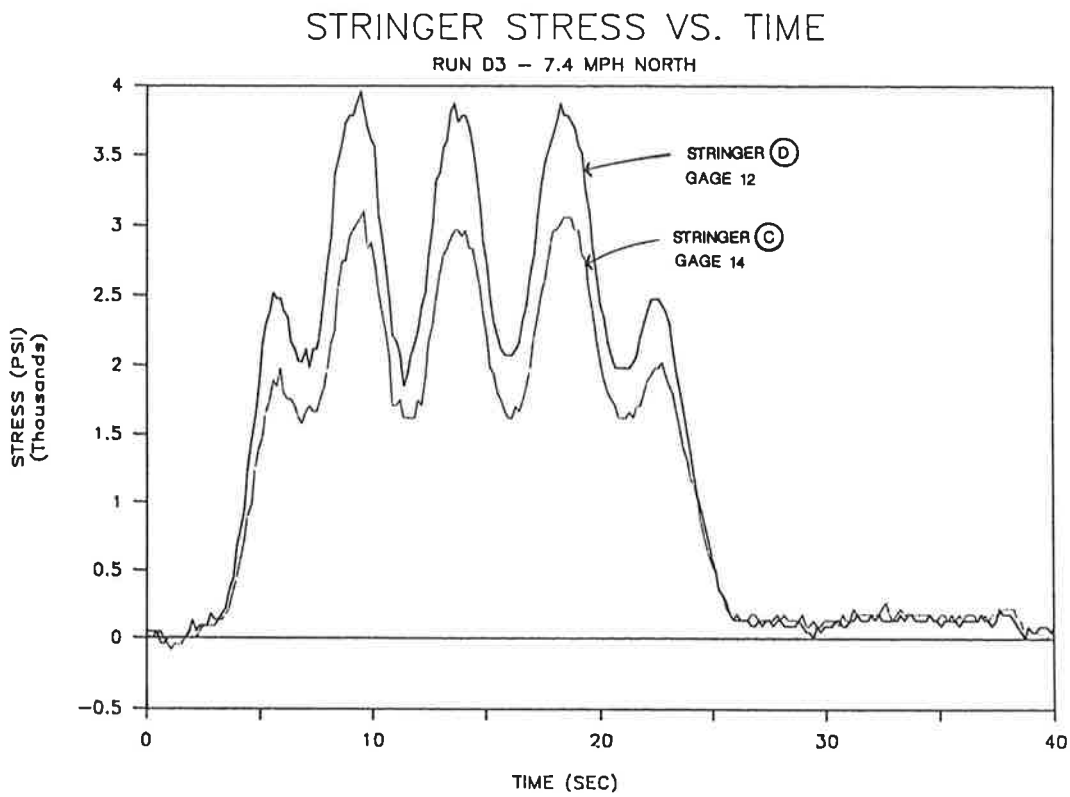

Figure 9. Test Train Dynamic Testing
Train Moving at Crawl Speed

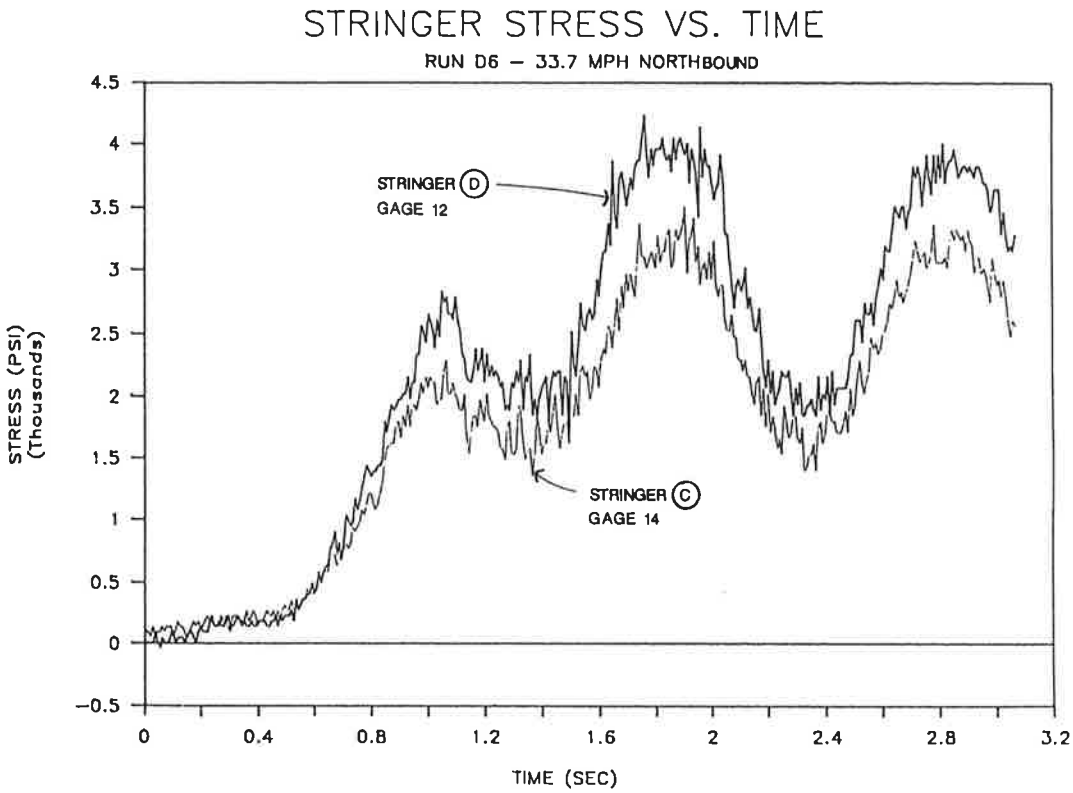

Figure 10. Test Train Dynamic Testing

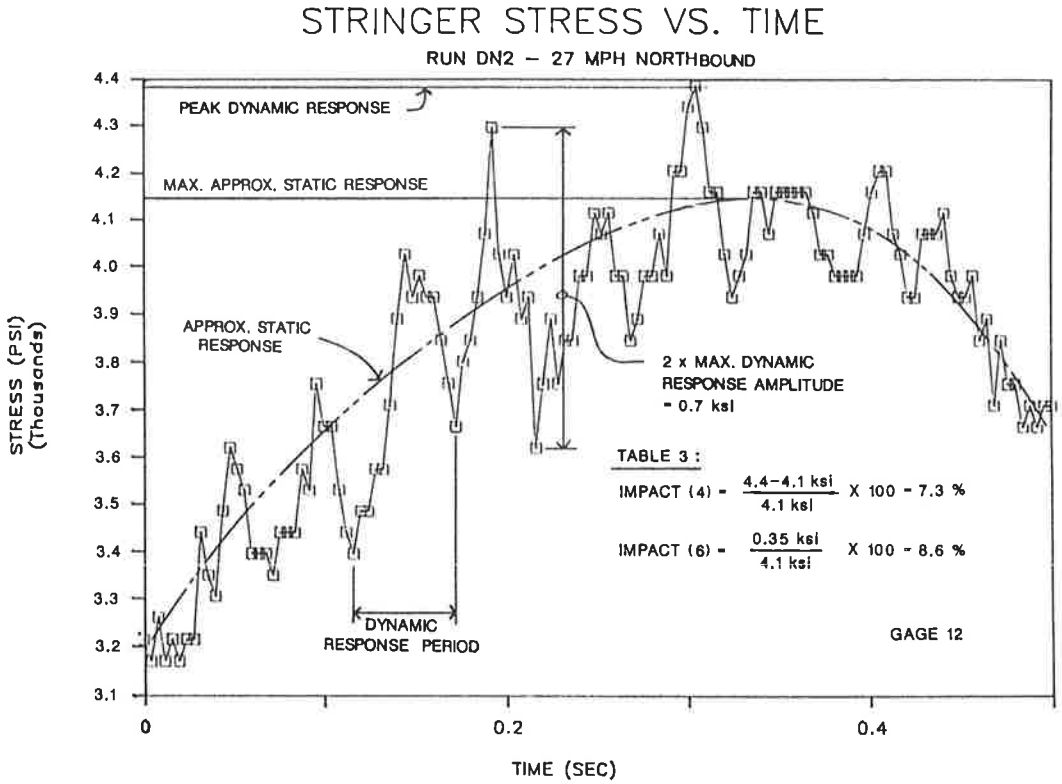

Figure 11. In-Service Train Dynamic Testing

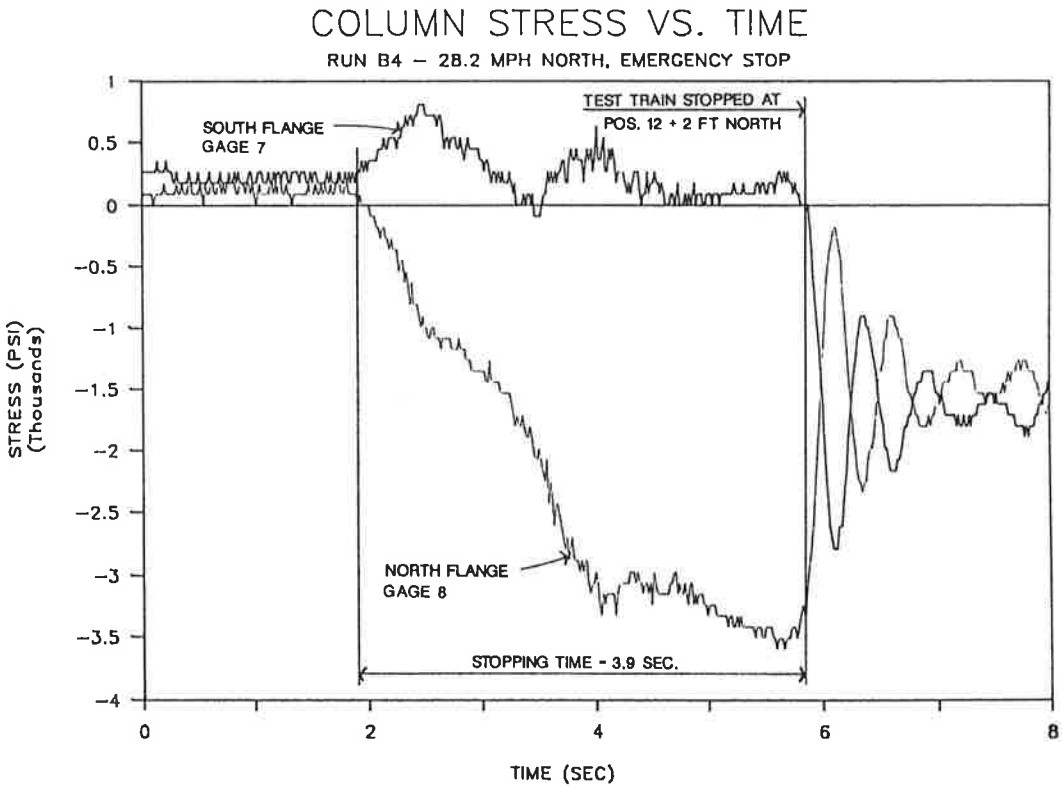

Figure 12. Test Train Longitudinal Force Testing

recent technical literature [2]. Impact is usually defined as the increase in peak response from a moving load over the maximum response from a static load. However, the maximum response from static train loading on this CTA track structure was found to vary considerably between each test run (*Table 1*). The impact factor was therefore determined from the dynamic response curve for each test (*Table 3 and Figure 11*). *Figure 11* illustrates the variables summarized in *Table 3* to calculate impact. *Table 3* shows measured impact calculated using two different equations. Column (4) shows measured impact as the increase in the peak dynamic response over the approximate maximum static response. The approximate static response was determined by fitting a curve to the median values of the dynamic response *(Figure 11)*. *Table 3*, Column (6), shows measured impact as the maximum amplitude of stress oscillations along the peak segments of the dynamic response curve. Both methods of calculating measured impact should be used where the measured maximum static response is not available for a given train load. The measured impact should then be reported as the greater of the two calculated values.

B.3 The braking of the train applies longitudinal forces to the elevated structure, causing bending of the support columns. The test data did not indicate a significant difference in maximum column flange stresses caused by braking and stopping the train using normal brakes or using emergency brakes (including track brake).

The braking and stopping of the test train caused a maximum flange tensile stress of 0.8 ksi and a maximum flange compressive stress of 3.6 ksi (*Figure 12*). The maximum column bending stress occurred at 0.2 ksi flange tensile stress, and 3.6 ksi flange compressive stress, equivalent to 1.7 ksi column compressive axial stress and 1.9 ksi bending stress. The measured compressive axial stress in the column for the test train stopped at this position, during the static testing, was 1.7 ksi. The calculated axial compressive stress in the column for the test train emergency stop position was 1.9 ksi. A calculation to determine the approximate magnitude of longitudinal force caused by braking indicated a force of 1.8 kips per column.

RECOMMENDATIONS

C.1 The maximum train live load stress for the outside stringers of this test span would be approximately 5.3 ksi plus allowance for train passenger load plus 10 percent average impact load.

C.2 Fatigue Assessment - The fatigue damage in the outside stringer bottom flanges of this test span, caused by passage of a typical empty four-car train, can be calculated from the dynamic test response plots (*Figures 9 and 10* are examples). These response plots show the variable amplitude complex stress cycle of the stringer bottom flange. Using the "rain-flow" type method [3] of counting cycles, the complex stress cycle can be expressed as an equivalent number of simple stress cycles causing the same amount of damage.

Using the stress response plot for the in-service train traveling at 41 mph and neglecting all dynamic stress oscillations, the equivalent variable simple cycles are as follows:

1 - Cycle 4.5 ksi
2 - Cycles 2.6 ksi
2 - Cycles 1.6 ksi

Cumulative fatigue damage rules, as outlined in A.R.E.A. Manual, Chapter 15, Section 7.3.4.2.e [4], are used to relate fatigue damage under variable loading to known behavior under constant amplitude loading. The effective or equivalent stress range of constant amplitude, calculated as the root-mean-cube (RMC) of all variable cycle stresses, produces the same degree of fatigue damage as the variable amplitude fatigue damage.

Effective RMC Stress Range = 3.0 ksi
Total Fatigue Damage = Five 3.0 ksi cycles

Using the equation for the fatigue strength curves of the form $N = A/S_R^3$, where N equals the minimum number of constant stress cycles to failure and S_R is the corresponding fatigue stress range, the above fatigue damage of five 3.0 ksi cycles is also equivalent to one and one-half 4.5 ksi cycles, and also to one 5.1 ksi cycle.

This methodology can be applied to rush-hour loaded cars by approximately factoring the above stresses for the increased passenger load. These results can then be applied to determine the total cumulative fatigue damage to the stringers, caused by the past and future loadings of this type of transit car.

C.3 The magnitude of impact loading measured for this test span (5 to 10 percent) was significantly lower than the A.R.E.A. Manual design impact value of 55 percent. Additional dynamic load testing is planned, as part of the overall condition assessment of the entire elevated transit support system, to verify and determine actual impact loading for:

a. Rush-hour, in-service loaded trains
b. Different spans, especially shorter spans
c. Elevated spans without stringer cross-bracing
d. Stringer spans with riveted flange angles
e. Variations of train speed and track alignment

C.4 Additional static load testing was recommended to evaluate and establish adequate long-term performance of the stringer cross-bracing system recently installed on the test span. This modification to the stringer bracing was being installed extensively along the Southside Main Line

elevated structure. This static load testing indicated significant non-linear behavior and shifting of train load distribution to the stringers, believed at this time to be caused by connection slip and residual end bearing forces. In order to equalize stringer loads, it was recommended to consider omitting the center diagonal cross-braces at all locations except at the bents. However, additional load testing should be conducted to evaluate dynamic response without the center cross-bracing.

C.5 Additional longitudinal-force brake testing is planned for the assessment of this type of structure throughout the entire elevated transit system. The additional testing is to determine the contribution of support bents at various distances from the braking train.

CONCLUSIONS

Static and dynamic diagnostic load tests were conducted to evaluate actual behavior of a 100-year old elevated steel structure. Load tests were conducted as part of a pilot test program for the condition assessment of the Chicago Rapid Transit System. Tests indicated a significant difference in the load distribution between the stringers, and the average measured impact factor was found to be much less than required by A.R.E.A. design specifications. A methodology was established to evaluate impact factors and fatigue life, and to determine the load rating using diagnostic load tests. The pilot program was successful and is currently being used as a guide for conducting more comprehensive system-wide testing of the Chicago Rapid Transit System.

ACKNOWLEDGEMENTS

The authors appreciate the cooperation and assistance provided by the Chicago Transit Authority in conducting the load tests. Also, the authors express gratitude to the Regional Transportation Authority for providing funding for the condition assessment of the Rapid Transit System.

REFERENCES

[1] Pinjarkar, S. G., Guedelhoefer, O. C., Smith, B. J., and Kritzler, R. W., "Nondestructive Load Testing for Bridge Evaluation and Rating", NCHRP Project 12-28(13), Final Report, (February, 1990).

[2] Bakht, B. and Pinjarkar, S. G., "Dynamic Testing of Highway Bridges - A Review", Transportation Research Record 1223, TRB, National Research Council, Washington, D.C., (1989), pp. 93-100.

[3] Schilling, C. G., "Stress Cycles for Fatigue Design of Steel Bridges", Journal of the Structural Division, ASCE, Vol 110, No. 6, (June, 1984), pp. 1222-1234.

[4] A.R.E.A, "Manual for Railway Engineering", American Railway Engineering Association, Washington, D.C. (1989).