Development of a Headlight Measurement System

M. RYS, E. RUSSELL, D. HARWOOD, AND A. RYS

The development, validation, and testing of a headlight measurement system (HMS) are described. The HMS hardware and the software developed for the system are described. The field study consisted of collecting data at six key visual points in the driving task. A complete, detailed manual developed on the setup and use of the HMS is discussed. The equipment setup and operating instructions, the calibration procedure, and recommendations for future system modification to improve the HMS are discussed. It was concluded that although more expensive sensors, in the $6,000 to $10,000 range, could be custom made and incorporated into a more sophisticated (but costly) system, the system developed proved to be adequate for the main purpose of determining distribution of light output of the current fleet of highway vehicles at any set of up to seven desired points quickly, easily, and with reasonable accuracy with relatively inexpensive, off-the-shelf hardware. Two companion manuals were also developed during the study: *Light Measurement System Manual* and *Installation and Operation Manual*.

A headlight measurement system (HMS) has been developed that can be used in field studies to sample illumination levels simultaneously from approaching vehicle headlights at a maximum of seven locations and at any number of points on the approach, or continuously, dependent upon the capacity of the portable computer incorporated into the system. The original study objectives included obtaining an extensive data base of headlight illumination levels of the fleet of vehicles currently in use on U.S. highways. Development of equipment needs, design of equipment hardware and software, testing and debugging in both lab and field situations were much more complex and time consuming than anticipated. The main thrust of the project evolved into the development and testing of the best system possible with off-the-shelf components that could be purchased and assembled at relatively modest cost.

Government regulation of vehicle headlight design has historically been based on measurements of headlight output under laboratory conditions. Bench measurement of headlight photometrics can be quite accurate but fails to account for many of the factors that influence the light output in the real world. Among the factors not always accounted for are variations in headlight mounting height, improper aiming, voltage variations in the vehicle electrical system, dirty or corroded headlight lenses and reflectors, vehicle pitch angle because of the bouncing of the vehicle body on its suspension system, and vehicle yaw angle as determined by driver steering control. All of these factors can influence headlight performance and real-world light levels and distribution as affected by these factors can only be determined in the field. These factors are dynamic variables that can only be sampled at various points in time. Thus, field measurements of existing, real-world headlight levels are needed to determine light levels and distributions of the vehicle fleet at any point in time. Also, good field values can be used as the basis for realistic performance standards for headlights. However, no system was readily available that would measure and record accurate headlight output throughout the range of values expected.

The HMS was developed in this study to provide NHTSA with a tool to set up a program to measure light levels from vehicle headlights in the field over their full range of expected values. The details of the development and operation of such a system should be of interest to anyone contemplating collecting data of this nature. Developing such a system at reasonable cost with no guidelines to begin with was not an easy task. However, the knowledge gained in developing the system, along with the equipment and operating manuals and the details in the final report, should be valuable information for anyone contemplating building such a system.

DESCRIPTION OF HEADLIGHT MEASUREMENT SYSTEM

System Overview

The HMS is an integrated set of light meters and computer equipment that measures the light output of automobile headlights at preselected positions. The HMS is designed to measure light levels from headlights of moving vehicles on the highway with no disruption to traffic flow. The equipment can also be used for light-level measurements of stationary vehicles or sources under field, garage, or laboratory conditions.

Light levels can be measured at any location where the light meters can be placed. An infrared triggering device can be used to record light meter readings when a vehicle is in position at specific distances from the sensors. Light levels measured by the sensors are recorded in a computer data base on a portable microcomputer. The HMS is portable and can be moved from site to site with a required setup time of approximately 2 hours. Operation of the system requires a trained crew of two or three persons.

The following section describes the major components of the HMS. A complete list of all components and supplies needed for field use of the system is presented in Table 1.

M. Rys, Department of Industrial Engineering; E. Russell, Department of Civil Engineering; and A. Rys, Department of Electrical and Computer Engineering, Kansas State University, Manhattan, Kans. 66506. D. Harwood, Midwest Research Institute, 425 Volker Avenue, Kansas City, Mo. 64110.

TABLE 1 Required Equipment and Supplies for Field Studies with the HMS

Microcomputer - Roadrunner by Micro Express, LCD screen, portable
Backup diskettes containing DOS version 3.3, Quiklite program
Blank diskettes to store copies of files containing field data
Junction box - black box (approx. 5-in x 8-in x 2-in) with 11 connection ports on top
Cable to connect junction box to microcomputer - gray insulation, 6-ft long with multipin connectors at each end; computer end has a second wire with single BNC coaxial connector
Power supply inverter for microcomputer - Power inverter Model PV-400, Triplite brand from Triple Mfg.; Backup is Triplite Model SB-200a
Power supply batteries for microcomputer - two deep-cycle marine batteries
Battery recharger - Sportsmaster 10-amp charger for deep-cycle batteries
Cables to connect the batteries to transformer and microcomputer
Infrared sensors - Banner Multi-Beam by Eng. Corp. Model SbEX transmitter, Model SBRX1 receiver
Adjustable brackets to attach infrared sensors to mounting posts
Batteries for infrared transmitter - Eagle-Picher Carefree Magnum 12-volt, 4.6 ampere-hours
Posts for mounting infrared sensors - 4 ft. gray, U-shaped steel posts with regularly spaced holes
Cables to connect infrared receivers to microcomputer junction box - gray 3-wire insulated cables, 250 ft long (2)
Light meters - Minolta Illuminance Meter T-1 (2 meters currently available)
Translator boxes to convert and amplify analog signal from light meters - Wilderson Instrument Co. Inc., Model TW8100 Two-wire TX
Wires to connect data translators and Minolta meters - 3 gray 4-ft wires with red and blue connectors at one end, single connector at other end
Cables to connect translators to microcomputer junction box - black, RG-59 coaxial wire, 250-ft long (6 cables currently available)
9-volt batteries for light meters
Cap for light meter to use during calibration - black lens cover supplied with light meter
Mounting bracket for light meters - black sheet metal cover for attaching light meter to mounting pole with band clamps
Cable to connect sensor and electronics portions of light meters - 15 ft. grey cable; useful in obtaining measurements at pavement edge locations; available from Minolta but not purchased as part of this study; a cable of this type was borrowed for testing purposes
Mounting post for roadside sign sensor - two-part, gray round steel extension pole plus 3-ft. gray U-shaped steel channel to be driven into the ground, and band clamps to connect these two parts
Mounting hardware for overhead sign location - two-part assembly, consisting of (1) the base that clamps onto the bridge rail of the overpass; this base is made up of two flat metal plates connected by pipes with adjustable clamp screws at one end and (2) a two-part gray round extension pole that lowers the light meter below the bridge rail of the overpass
Support light meter for measuring glare of oncoming vehicles - A two-legged folding sign stand (such as is used to mount a temporary "MEN WORKING" sign) was used to mount this sensor. (This stand was borrowed and is not part of the equipment currently available with the HMS system.)
Sand bags - Sand bags were used to mount and protect the pavementedge sensors at a height of 6-in. above the pavement and to anchor the sign stand used for the oncoming vehicle location
Voltmeter - to confirm proper voltage levels for all batteries
Miscellaneous tools and supplies, including:
hand tools such as: screw driver, adjustable wrench, allen wrench, pliers, sledge hammer, tape measure - 100 ft. cloth, distance measuring wheel, spray paint or marking crayon, and duct tape

System Components

The HMS consists of five major components: the light meters, the infrared vehicle sensors, the mounting hardware, the portable microcomputer, and the microcomputer software. A block diagram of the HMS is shown in Figure 1. The function and operation of each component is described below.

Light Meters

Light levels are measured using commercial off-the-shelf battery-powered light meters, the Minolta Illuminance Meter, Model T-1. These meters may be mounted at any location where light levels are to be measured. The light meters are connected to the computer by cables. In the current system,

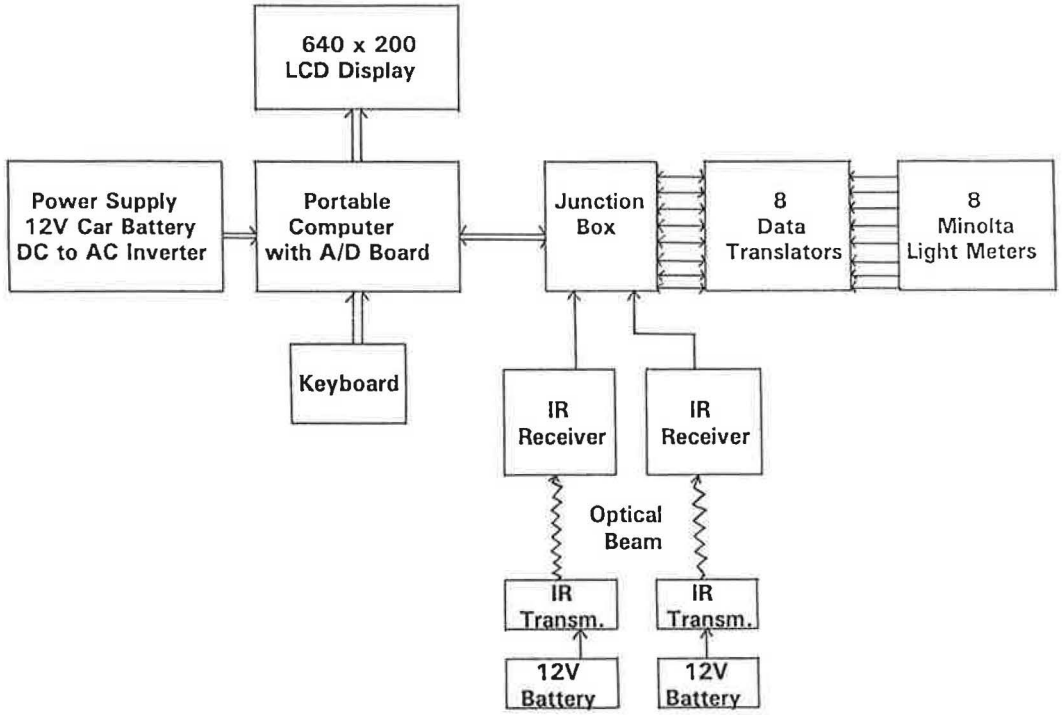

FIGURE 1 Block diagram of the headlight measurement system.

the maximum cable length that has been tested from light meter to computer is 250 ft (76.3 m).

The system was originally designed with less-expensive custom-made light sensors than the Minolta meters currently used. However, it was found that these less-expensive sensors were not capable of reading levels as low as 0.001 fcd and that their range was very limited when set to read their lowest light level, which was about 0.05 fcd. The possibility of using more sophisticated, custom-designed sensors was investigated. It was determined that they could be developed but their cost would be several thousand dollars each. It was concluded that the Minolta meter would be sufficient in terms of minimum reading, accuracy, and reliability and would thus be most cost-effective.

The Minolta meters selected for use with the system are capable of reading light levels in any of five ranges that can be manually selected by the user:

- 0.001 to 0.999 fc,
- 1.00 to 9.99 fc,
- 10.0 to 99.9 fc,
- 100.0 to 999.9 fc, and
- 1000.0 to 9999 fc.

Only the two lower ranges are normally needed for headlight field studies on highways at typical sign locations, because light levels above 10 fc are not likely to be measured on roadside or overhead locations.

The lowest light level the system can measure is 0.001 fc with ±0.001 fc accuracy (±100 percent) at the *lowest* level. All of the lab measurements indicate that the midpoint of each range has an accuracy better than ±2 percent *or* the least significant digit, whichever is greater. Except when pushing the system to record the lowest possible values, the range should be selected so that expected readings will be midrange. Accuracy is lowest at the extremes of each range. If a set of readings overlaps two ranges, or it is desired to read values spanning two or more ranges, two or more meters can be used, each set on a different range. Automatic ranging equipment was investigated, but it was concluded that the benefits did not justify the cost. Again, estimates obtained were for several thousand dollars.

The Minolta meters have a digital readout display on the meter itself, as well as an analog output port at which the reading in units of 0.001 fcd is represented by an analog voltage in millivolts. To avoid voltage drop, the analog voltage output stage of the Minolta meter has to be converted to, and transmitted as, a variable converter to the computer located some distance away. Therefore, an amplifier or translator device was installed in the line to convert the analog voltage in millivolts to an analog current in milliamps. This analog current is detected by the portable microcomputer and converted into a reading in foot-candles when a light level reading is taken. The translator device must be calibrated for the specific meter being used and the specific range (in foot-candles) in which it is being used. Thus, it is most convenient to have available in the field several translator devices that have been previously calibrated for each meter and each range in which each meter is likely to be used.

Each Minolta meter consists of two parts: a sensor and an electronics package. In normal operation, these two parts of the meter are plugged together into a single unit. However, the manufacturer can provide a cable approximately 15 ft (4.6 m) long so that the sensor and the electronics package can be placed in different locations. This was done when the sensor was placed near the pavement edge to avoid the loss of

the electronics package if the pavement edge sensor were run over by a vehicle. Laboratory tests found that the Minolta meters gave identical readings with and without the use of this cable connecting the two parts of the meter.

The HMS is designed to use a maximum of eight light meters at any one time. Each meter can be placed at a different location and each can operate within a specific user-selected range. Two meters were purchased with the system and are available for further use. An additional six meters should be purchased to take full advantage of the system capabilities.

Infrared Sensors

Two pairs of infrared sensors (each pair consisting of a transmitter and a receiver unit) are used to detect the presence of a vehicle and trigger the system to record light level readings. The corresponding transmitter and receiver units are mounted on posts on opposite sides of the road and aligned so that a beam is continuously being transmitted between them. When a vehicle breaks this beam, a signal is sent to the computer system. This signal consists of transistor-transistor (TTL) compatible voltages, which implies that a signal of about 5 volts might correspond to the uninterrupted light beam, and a zero volt signal would be received when the light beam is blocked.

The receiver unit is mounted on the same side of the road as the portable microcomputer and is powered through the cable that connects the receiver to the microcomputer. The transmitter unit is located on the opposite side of the road from the computer and is battery powered.

Because two pairs of infrared sensors are available, the system can be triggered to begin or end readings at two specific locations. The specific relationship between the infrared sensor triggers and the beginning or ending of data collection is determined by the computer software.

The infrared sensors are shown in Figure 2 and Figure 3.

Mounting Hardware

The HMS includes hardware for mounting the light meters and infrared sensors in appropriate positions. Mounting hardware for the light meters includes a pole for mounting a meter in a roadside sign location and a bracket and rod to mount a meter on a highway overpass in the position that would be occupied by an overhead sign. Hardware was also developed for mounting a light meter on a highway shoulder near the edge of the traveled way, 0.5 ft (0.15 m) off of the pavement surface. However, it was found that it was more satisfactory to tape it to a sandbag placed at the appropriate position. Sandbags provide additional protection to the light meter and reduce the possibility of it being struck by an errant vehicle and crushed. A photograph of mounting hardware for the right side sign location is shown in Figure 4 and a photograph of mounting hardware for the overhead sign location is shown in Figure 5.

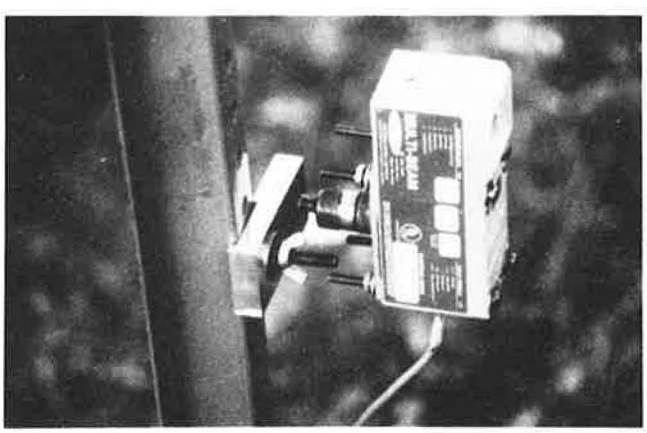

FIGURE 2 Close-up of one infrared transmitter unit.

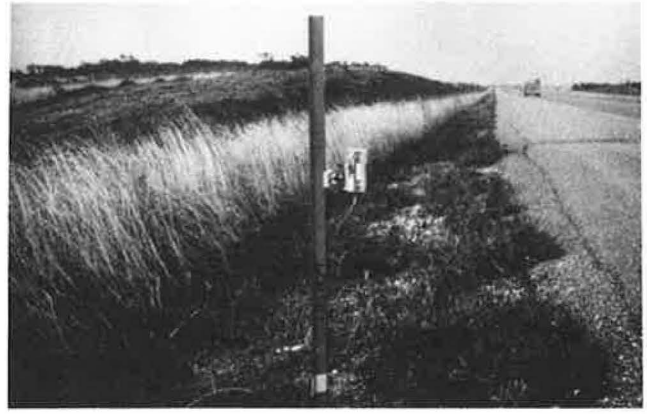

FIGURE 3 Infrared sensor in place at the freeway site.

Portable Microcomputer

The HMS is operated by a portable microcomputer. This computer is IBM-PC-compatible with 1 Mb of random access memory (RAM), a 20 Mb hard disk drive, and an 80286 processor. Although this computer was at the state of the art when purchased in 1988, faster processors such as the 80386 are now available at reasonable cost.

Up to eight light meters and two infrared vehicle sensors can be connected to the computer through a junction box. The computer contains an analog-digital conversion board that translates the analog signals received from the light meters into digital data that can be stored in a data base.

The HMS is controlled by a software program known as Quiklite that was written in the QuickBasic language specifically for use with this system. This program, whose operation is described in more detail in the next section, detects when the infrared sensors are triggered by a vehicle to begin or end a data collection interval, reads the light meters at specified times during the data collection interval, and stores the light meter readings in a data base. The HMS uses the PC-File+ data base format, and that data base software can be used to analyze the data after they are collected.

The complete list of hardware in Table 1 shows the nature of the system (i.e., composed of relatively simple, relatively inexpensive off-the-shelf components). Two manuals were developed during the study that detail the hardware and software

FIGURE 4 Mounting hardware for the right sign location.

FIGURE 5 Mounting hardware for the overhead sign location.

components and system operation: *Light Measurement System Manual* and *Installation and Operation Manual*.

The software and HMS operation are described in the next section.

Computer Software

Central to the HMS is the Quiklite program. This program, written in QuickBasic and compiled in an executable module stored under the file name QUIKLITE.EXE, can be run by entering the command QUIKLITE from the MS DOS prompt.

The program is controlled by the user from a main menu with a selection of seven options:

- Setup system,
- Display only,
- Record test,
- Review test records,
- 1702A information services,
- PC-File+, and
- Return to DOS.

Each of these options is explained below.

Option 1—Setup System Five fundamental parameters that control the operation of the Quiklite program must be set before headlight data can be recorded:

- Sample rate,
- Average base,
- Distances between Switches 1 and 2,
- Time between second switch and third set of readings, and
- Sensor ranges.

All five parameters can be changed at any time depending upon the data collection objectives, site geometry, equipment configuration, and so forth.

The sample rate is the number of readings per second made from each light meter while data are being collected. The software is capable of making from 1 to 4,000 readings per sec. However, it was found that the processor speed sets a practical upper limit on the combination of sample rate, average base, and distance between infrared sensors. Trials established that the most satisfactory value for the processor used was 500 readings per sec, which was the setting used for all data collected as part of this study. Newer portable computers could greatly increase the processing speed and number of readings per second and greatly enhance the system, as discussed in later sections.

The average base is the number of consecutive readings that are averaged to create each value stored in the data file. The average base used in this study was 50 readings (i.e., one average stored for each 50 readings made). Thus, the combination of a sampling rate of 500 readings per sec and an average base of 50 readings implies that each average light level stored in the data base is the average of 50 readings made over an interval of 0.1 sec.

The user must enter the distance (in feet) between the infrared sensors used to detect vehicle passages (called Switches 1 and 2 in the program).

The data collection interval for each vehicle passage selected for measurement of headlight levels begins when the first infrared sensor is triggered by the vehicle and ends at a specified time interval after the second sensor is triggered. The significance of this time interval is addressed further in the discussion of Option 3—record test.

The range selected for each of the eight light meters must be set in the Quiklite program and these ranges may be changed

at any time. These ranges must also be manually set on the light meter itself.

Option 2—Display Only The display mode allows continuous visual monitoring of the light levels being read on each sensor. The light levels are presented on the computer screen in both a digital and graphic format. This mode is useful for verifying that the infrared sensors and light meters are operating, determining whether the light meters are set to the appropriate ranges, and watching the measured light levels change in real time. No data can be stored in the data base in this mode.

Option 3—Record Test The record test mode is the option used to record light levels and store them in the data base. When a selected vehicle approaches and Option 3 is chosen, the system is "armed" so that readings will be "triggered" when the chosen vehicle passes through the infrared sensors. Thus, Option 3 should not be selected until the previous vehicle has passed the sensors.

Measurement of light levels begins as the vehicle trips the first sensor and continues until a specified time interval has passed after the vehicle trips the second sensor. When the vehicle has completely passed, the light level readings and the vehicle speed are displayed on the screen. The user then has the option to either save or delete the data in the data base.

The original concept for the HMS was that measurement and recording of light levels would be continuous from the time the vehicle tripped the first sensor until a specified time interval after the vehicle tripped the second sensor. Using the values of the initial setup parameters described earlier, it was intended that light levels from each meter would be recorded continuously every 0.1 sec during the data collection interval. Furthermore, it was intended that each recorded value would include the mean, variance, maximum, and minimum of specified number of readings (e.g., 50 readings). However, after the system was built, it was found during testing that the processing speed of the computer was not fast enough to permit this much data to be obtained and stored. Better computer technology available today (e.g., the 80386 processor) should allow the originally intended data collection procedures to be easily implemented.

An alternative scheme that would collect meaningful data within computer constraints was developed, and the available version of the Quiklite program uses this alternative scheme. Mean values of the reading from each light meter are recorded at three times during the data collection interval. These are the times when the vehicle trips the first infrared sensor (labeled in the data base as time T_1); the time when the vehicle trips the second infrared sensor (time T_2); and at the specified time interval (e.g., 1.1 sec) after the second infrared sensor is tripped (time T_3). The position of the vehicle at time T_3 can be estimated because the vehicle's speed between times T_1 and T_2 is calculated by the system.

Option 4—Review Test Records The review test records option allows the user to review data already recorded. Individual records or sequences of records can be recalled by their assigned record numbers, and the user can step forward or backward through records one at a time.

Option 5—1702A Information Services The 1702A information services option allows the user to scroll through an information file that contains a description of the HMS. This file is equivalent to a manual for use of the system.

Option 6—PC-File+ Data obtained with the PC-Plus system are stored in data files that can be accessed and manipulated with PC-File+. Selecting Option 6 accesses the PC-File+ data base manager and allows the user to sort and summarize data and generate reports.

Option 7—Return to DOS The microcomputer system uses version 3.3 of MS DOS as its operating system. Option 7 allows the user to leave the Quiklite program and return to DOS. From DOS, the user can reset the internal date and time functions, which are recorded in each record of the data base. Before the system is transported, the user should run

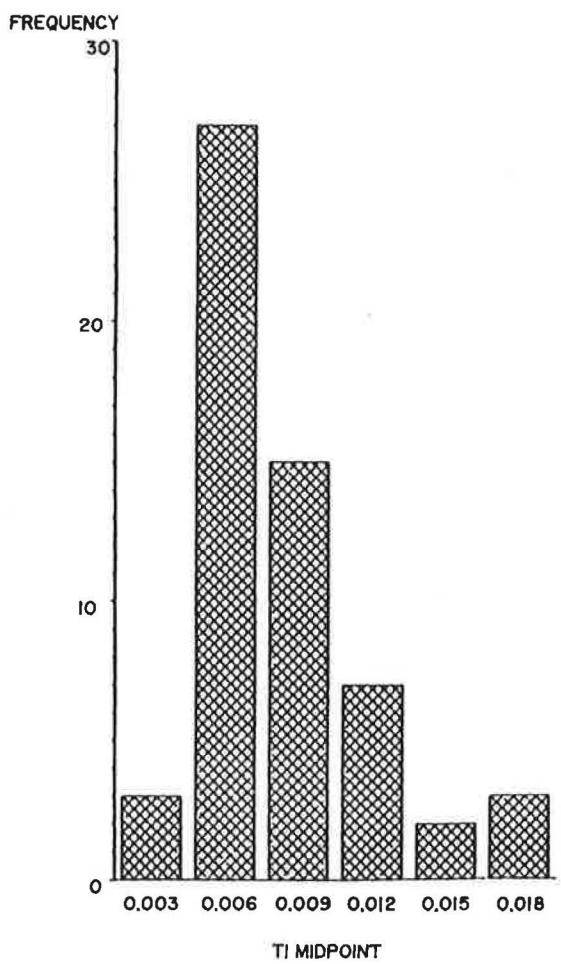

FIGURE 6 Histogram of illuminance for passenger cars at right overhead sensor location at T_1 distance.

the HDPARK command from DOS to park the hard disk drive. The procedure avoids damage to the hard disk during transportation.

RESULTS

A sample of the results obtained from data collected by the HMS is presented in Figure 6. These values and distributions are for passenger cars at right overhead sign location at T_1 distance.

These values are presented here primarily to illustrate the type of results possible with the system. The values obtained are considered to be reliable to the extent that small sample results are reliable. After the HMS was built and debugged, remaining funds were sufficient for only limited field testing. Thus the sample was very small relative to the size of the vehicle fleet in the United States. A set of results and discussion of a pilot field study at two highway locations using this HMS are described elsewhere in this Record by Rys et al.

CONCLUSIONS

An HMS for field studies of illumination levels from approaching vehicle headlights was developed. The system allows for simultaneous sampling of light levels at seven locations and at any number of points on the approach under control of a portable computer. The main thrust of the project was the design and testing of the best system possible with off-the-shelf components that could be purchased and assembled at relatively modest cost. Development of equipment needs, design of equipment hardware and software, testing and debugging in both lab and field situations were much more complex and time consuming than anticipated. The system described in this paper performed well during the pilot field studies. Several improvements in the system's flexibility, portability, sensitivity, and speed of data acquisition could be made by modifying the software and upgrading the computer hardware and light sensors at a modest increase in cost.

REFERENCES

1. E. Russell, D. Harwood, M. Rys, A. Rys, and M. Keck. *Development of a Headlight Safety Database*. Final Report, USDOT/NHTSA, DOT HS 806 736. NTIS, Springfield, Va. 1991.
2. *Manual on Uniform Traffic Control Devices for Streets and Highways*. FHWA, U.S. Department of Transportation, 1988.

Publication of this paper sponsored by Committee on Visibility.