Preliminary Investigation on Effects of Moisture on Concrete Pavement Strength and Behavior

NEERAJ BUCH AND DAN G. ZOLLINGER

The effects of moisture on pavement concrete properties and behavior are reviewed. Drying of concrete is investigated in terms of Gibbs free energy. A nondestructive system was devised to measure the change in relative humidity with time. The relative humidity and temperature changes within the body of the specimen were measured using humidity and temperature sensors; these sensors were connected to a continuous data logging device. The humidity profile shows that drying in the surface layers is greater than in the interior concrete. Moisture content measurements indicate that the strength of concrete is dependent on the relative humidity. From the experimental results, it can be concluded that as concrete dries, the stress levels increase under varying restrained conditions. This observation may be useful to pavement engineers using certain assumptions in determining when to introduce a saw cut in a freshly constructed rigid pavement. Thus, on the basis of the determination of the change in relative humidity, a system of crack control may be devised.

From the viewpoint of engineering analysis and design of concrete pavements, it is desirable to control pavement cracking at joint locations and at desirable intervals in the pavement for decreasing the possibility of the formation of uncontrolled cracks. One of the most critical periods in the life of a concrete pavement is soon after placement of the concrete when the strength of the material is low in comparison with the development of tensile stress and subsequent cracking under hot weather concreting conditions. During this initial period, significant changes can occur in the relative humidity of the pavement surface (Figure 1); these changes may cause the shrinkage properties of the surface concrete to be very different from the concrete below the surface. The surface layer of concrete is referred to as the "skin" of the concrete pavement (*1*). The behavior of the skin can be of particular interest to the pavement engineer in terms of understanding the factors that influence the development of environmentally induced stress and cracking in concrete pavements. It may be suggested that the stress state of the skin concrete may be related to the moisture state or the relative humidity of the skin concrete and that, as a consequence, may provide an indication of saw-cut timing on the basis of comparisons of the concrete stress to the concrete tensile strength.

The concrete at the surface of the pavement may be thought of as having three skins: the cement skin (about 0.1 mm thick), the mortar skin (about 5 mm thick), and the concrete skin (about 30 mm thick). These skins are created by sedimentation and segregation as a result of gravity, compacting methods such as vibrating, and permeation and evaporation of water in and out of concrete (*1*). The skin effect leads to variations in cement, aggregate, and water content and in porosity over the surface layers and so affects durability, differential hygric and thermal shrinkage and swelling, and differential strength and deformability. As observed experimentally, the surface layers dry faster, causing the skin to be coarser and more porous. As a noted consequence, increased water sorption by cement and mortar skin together with an increased water-cement ratio may cause increased dilatation by freezing and thawing and especially by use of deicing salts. The increased porosity of the surface layers gives greater erosion and wear potential while aggressive components of air or chemical solutions may penetrate quicker in concrete and increase chemical reactions in the skin (*1,3*).

Recent literature review has revealed that the prediction of the history and distribution of pore humidity in concrete structures is a problem of major importance, as is the state of environmentally induced stress. By measuring the moisture state within a concrete structure, a realistic prediction can be made for creep, shrinkage, thermal dilatation, stress state, deflections, and crack formation (*3*). The pore humidity may affect not only the concrete state of stress but also the strength, thermal conductivity, and rate of hydration or maturing of

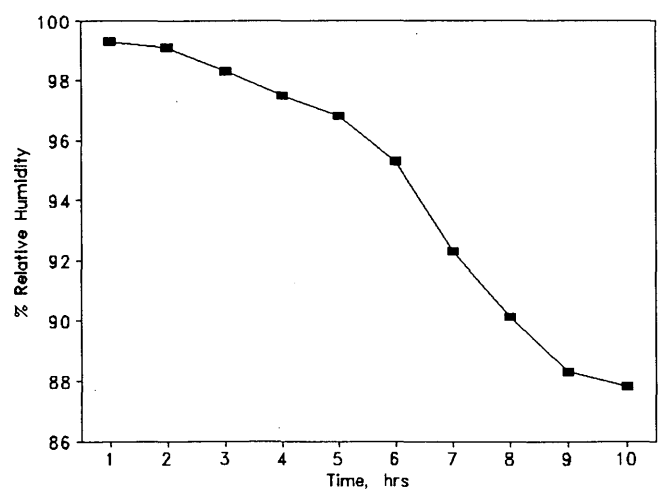

FIGURE 1 Change in relative humidity with time at pavement surface.

Texas Transportation Institute, Texas A&M University, College Station, Tex. 77843.

the concrete. As the drying process progresses, the moisture is lost with ever-increasing difficulty and the drying becomes much slower than an extrapolation of the initial drying curve; hence, diffusivity decreases with water content (*4*).

A pore water parameter related to the pore relative humidity of the concrete is the tensile stress of the pore water, sometimes called Gibbs free energy (*5*). To establish a relationship between a change in relative humidity (over time) and the change in modulus of rupture (MR) of the concrete, it is useful to introduce the concept of Gibbs free energy. To this end, an experiment was undertaken to measure the change in relative humidity within the body of concrete specimens subjected to a drying environment at different time intervals. The moisture data were then used in determining the Gibbs free energy and the change in the free energy as related to the state of stress in terms of MR. This information is useful for establishing a correlation between limiting changes in the pore relative humidity of the concrete and the state of stress with respect to the concrete strength at a certain time soon after concrete pavement placement.

EXPERIMENTAL PROGRAM

Test specimens used in this study consisted of beams 6 × 6 × 20 in. All specimens were cast using a water-cement ratio of 0.50. The nominal maximum coarse aggregate size was 1 in. The aggregate consisted of crushed limestone and river sand. Portland cement C150 (ASTM Type I), with no admixtures or air entraining agents, was used.

Material	*Design Weight* (lb/yd^3)
Cement (Type 1)	590
Fine aggregate (river sand)	1044
Coarse aggregate (limestone)	1841
Water	295

The concrete mix was designed in accordance with ACI 211.1-81 (revised 1985). Eight beam specimens were molded. PVC pipe sleeves of ½-in. diameter and 1- and 3-in. lengths were inserted in the fresh concrete below the surface of the concrete specimen to act as an encasement for the relative humidity sensors (Figures 2 and 3). The sleeves were provided

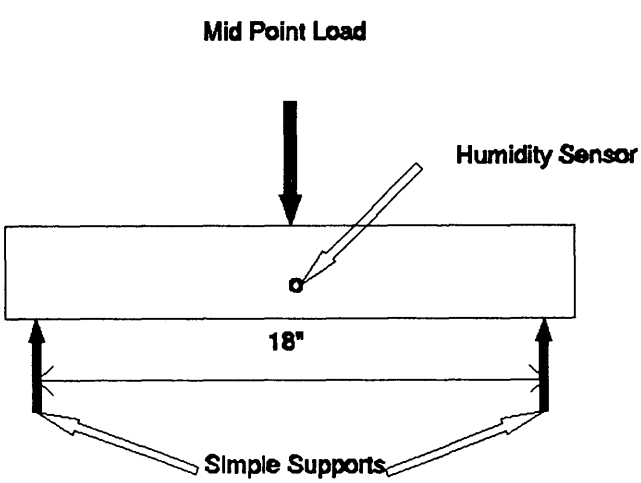

FIGURE 2 Stress measurement setup.

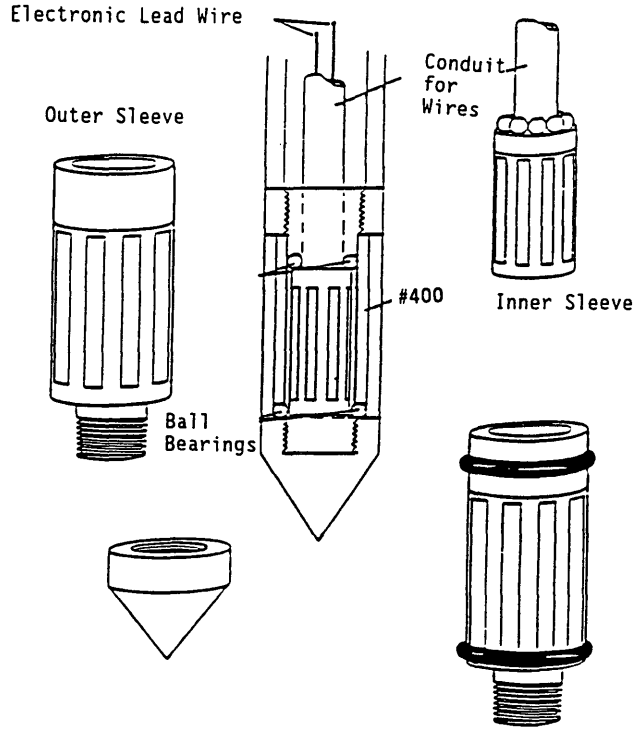

FIGURE 3 Configuration of relative humidity meter.

to prevent the sensor tips from making direct contact with the concrete. The relative humidity sensors were connected to a continuous recording data logger.

The data logger provided continuous information about the relative humidity and temperature in the concrete specimen at the specified depths. To prevent moisture loss through the PVC casing, the sensors were equipped with a rubber plug that fitted perfectly into the casing, providing an airtight seal. The entire assembly was then placed in an environment chamber (73°F, 95 percent relative humidity) for the duration of the experiment.

Measurements were made within the specimens at 3, 7, 14, 21, and 28 days. These measurements included recovery of the change in the relative humidity and temperature within the body of the concrete. This was achieved by downloading the information from the data logger to a personal computer and evaluating the data. Before the removal of the relative humidity sensors, the beam specimen was tested under single-point bending and subsequently determined both the load at failure and change in moisture. This procedure was repeated for all the specimens on the test days. To compute the Gibbs free energy, an accurate determination of moisture change is an essential parameter. Once all the data were collected and processed, the following relational plots were developed:

- Time versus change in relative humidity with time and depth of measurement
- Gibbs free energy versus relative humidity
- Change in Gibbs free energy versus modulus of rupture

This instrumentation can be placed in the field easily. In fact, experience has shown that a contractor's labor force can in-

stall the relative humidity meters with little supervision (Figure 4).

The second phase of the experiment consisted of testing beam specimens for strength at different dried stages. This experiment consisted of molding six beam specimens using the same mix design as in Phase 1 with identical beam dimensions. After molding, the beam specimens were transferred to a temperature-controlled water bath; the curing temperature was 73°F. The specimens were cured under identical conditions for 3 days. After the initial curing period, two beam specimens were tested immediately, and the other four specimens were allowed to air dry in the environment chamber. The remaining two pairs were tested after 2 and 4 hr of air drying, respectively. The results of the experiment are given in Table 1.

ANALYSIS AND DISCUSSION OF RESULTS

The results, as shown in Figure 5, reveal that relative humidity within the specimen body reduced with curing time such that the upper layers experienced a quicker loss of moisture than the interior of the concrete. The relative humidity is related to loss of moisture. This fact may be considered when designing the concrete cover for the reinforcing steel.

"The adsorbed molecules are much less susceptible to flow than capillary water because of the strong surface forces" (*4*). The change in the diffusivity may be explained in terms of a diffusion mechanism in that the size of the mean free path of water molecules in vapor is much greater than the size of the continuous pores in concrete, so that the probability of a vaporized water molecule passing through a narrow pore is reduced (*4*).

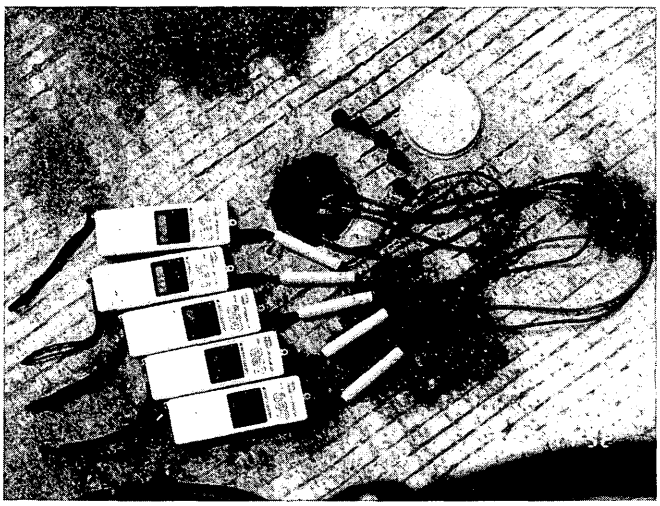

FIGURE 4 Photograph showing field placement of relative humidity meters.

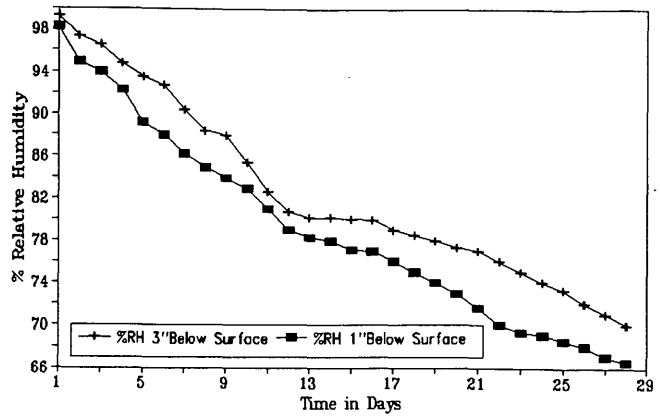

FIGURE 5 Reduction in relative humidity at different depths.

One of the parameters analyzed using the experimental data was the Gibbs free energy (Ψ):

$$\Psi = \frac{R \times T}{m \times g} \times \ln\left(\frac{H}{100}\right) \quad (1)$$

where

R = universal gas constant,
T = temperature in degree Kelvin,
m = gram-molecular weight of water,
g = gravitational constant, and
Ψ = Gibbs free energy.

Table 2 shows the variation in Gibbs free energy as calculated using Equation 1. Gibbs free energy is a negative quantity, such that as the specimens dry, relative humidity and free energy decreases. This relationship is clearly illustrated in Figure 6.

"For a given evaporable water content the system has a thermodynamic state that can be expressed as the thermodynamic equation of state, the determinants of which are pressure, temperature, and volume. With two of these parameters known, the third can be determined. . . . This thermodynamic state is true for any system, homogeneous or not" (*6*). Because the energy content of the system varies with the evaporable water content, it is essential to consider the evaporable water content when defining equilibrium conditions. The composition of the system under study may vary with change in evaporable water content; with each such change

TABLE 1 Effect of Curing Concrete Strength

Type of Curing	Load @ Failure, lbs	Modulus of Rupture,psi
Wet Cured, No Air Drying	1490	250
	1440	240
Wet Cured, Air Dried for 2 hr	1290	215
	1200	200
Wet Cured, Air Dried for 4 hr	1170	195
	1140	190

TABLE 2 Change in Gibbs Free Energy with Relative Humidity

Time in Days	% Relative Humidity	Gibbs Free Energy, psi
1	99.3	-137.6
3	96.5	-697.7
7	90.5	-1954.7
14	80.2	-4320.8
21	77.0	-5118.1
28	70.0	-6984.5

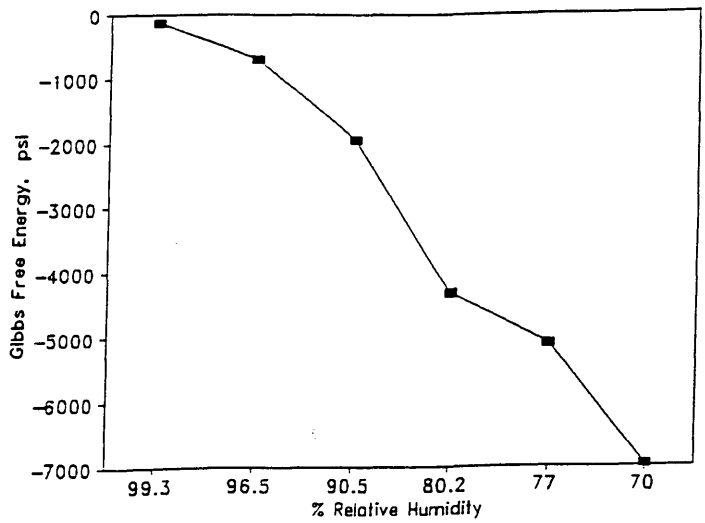

FIGURE 6 Change in Gibbs free energy with humidity.

of composition, there is a change of energy content. "If there are no changes in energy content with changing water content, the spontaneous phenomenon of shrinkage and swelling could not be detected, and within certain stress limits neither [could] creep" (*6*).

The beam specimens referred to previously were loaded using a single-point center load until failure. Before the modulus of rupture was determined, the relative humidity was recorded. At completion (at failure) of the testing, the relative humidity was measured once again (Figure 2). These humidity measurements were made directly under the load. This procedure was repeated for all the beam specimens tested at 3, 7, 14, 21, and 28 days. The intent of these measurements was to establish a relationship between the concrete stress state at failure and the Gibbs free energy.

The net change in Gibbs free energy is negative and varies with the level of stress (Table 2). On the basis of the theory of pure bending, one can derive the following relationship (using center-point loading):

$$M = PL/4$$
$$\sigma = Mc/I$$

where

$$c = d/2$$
$$I = bd^3/12$$

Assuming the tensile stress is distributed uniformly at failure,

$$M_{ult} = \sigma_t \times (bd/2) \times (d/2) = P_f L/4$$

Hence

$$MR = P_f L/bd^2$$

where

σ = bending stress (psi),
MR = modulus of rupture (psi),
P = load (lb),
I = moment of inertia (in.^{3}), and
c = distance of extreme fiber (in.).

$$\sigma_t = A \times \Delta\Psi \quad (3)$$

where A is -16.236 and $\Delta\Psi$ = change in Gibbs free energy.

From Equation 3 and the experimental relationship shown in Figure 7, the modulus of rupture ranges from -0.27 to -0.08 times the change in Gibbs free energy. On performing the t-test, it was determined that the slope of the regression line differs significantly from zero at an α of 5 percent.

Table 3 shows the change in the modulus of rupture for the three pairs of beam specimens tested at 7 days in flexure after being dried in air for different periods. The experimental results reveal that the specimens exposed to any degree of air drying showed corresponding lower strengths, even though the concrete mix design was identical and the initial curing conditions were the same. Apparently these results indicate

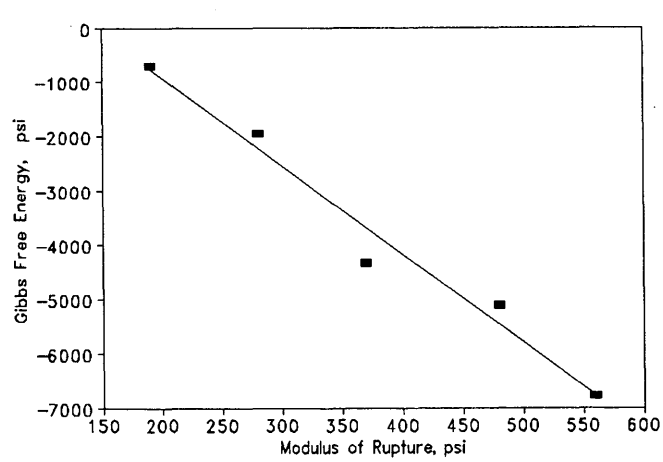

FIGURE 7 Change in MR as a function of Gibbs free energy: $y = 2329.04 - 16.235\,x$, $R^2 = .97$, standard error = 449.2258.

TABLE 3 Change in Beam Stress as a Function of Gibbs Free Energy

Time in Days	MR, psi	$\Delta\phi$, psi	MR/$\Delta\phi$
3	190	-698	-0.27
7	280	-1955	-0.14
14	370	-4321	-0.08
21	480	-5118	-0.11
28	560	-6984	-0.08

the dependence of concrete strength on the moisture state of the concrete. Because of the age of the beam specimens, it is unlikely that the decrease in strength is due to shrinkage-related cracks. However, it has been noted that if the drying is rapid, shrinkage cracks may develop in the transition zone and influence the flexural strength of the concrete specimen. The magnitude of the apparent loss of strength depends on the magnitude of moisture loss from the surface of the specimen (*7,8*). Therefore, it may be stated that the moisture in concrete may play two roles on the mechanical behavior of concrete: one that affects the strength, and one that affects the level of stress depending on how the Gibbs energy is developed in the pore water. These findings may be useful in developing a quality-control plan for saw cutting of concrete pavement, because concrete strength (and susceptibility to cracking) is affected by the moisture state of the concrete. It is recognized, however, that further research is warranted to investigate the effects of age (beyond those considered in this study), resaturation, and stresses in the elastic range on Gibbs energy.

Application to Jointed Concrete Pavements

As changes occur in the moisture state of concrete, a concrete pavement is subjected to volumetric changes similar in character to those produced by changes in temperature. These changes can lead to the development of gradients that contribute to subgrade friction and more particularly, curling- and warping-related stresses in the slab (Figure 8). Stress development at an early age in a concrete pavement system may be largely due to moisture-related behavioral characteristics in the concrete. The climatic conditions to which the pavements are exposed involve changes in precipitation and humidity. The instrumentation procedure described in this paper allows for the measurement of moisture variation in the pavement slab and provides an indication of stress induced thereby. Warping stresses, as suggested by Westergaard (*9*), depend on a structural parameter known as the radius of relative stiffness (ℓ, typical values range from 36 to 42 in.). The ℓ-value relates to the level of restraint as it varies from zero at the slab edge to a maximum value at a distance of 4.44ℓ from the edge in slabs of lengths (L) greater than 12ℓ (*10*), as illustrated in Figures 8 and 9. The varying level of restraint can be described in terms of the L/ℓ ratio. Figure 9 shows the variation in maximum stress (described in terms of the coefficient C) with varying levels of restraint. For slabs longer than 12ℓ, the maximum stress occurs at 4.44ℓ from the edge of the slab (*10*). Typically, cracks in the slab appear at these maximum stress locations, which suggests where joints should be saw cut in a jointed concrete pavement system. The restraint conditions under which Gibbs free energy was determined in the laboratory beam specimen described previously are directly applicable to the restraint conditions in concrete pavements at distances of 4.44ℓ or more from the free edge. The laboratory beam specimens were used to measure the change in Gibbs free energy from under fully restrained conditions, which allows the results to be applicable to the restrained portion of concrete pavements. The level of restraint in a concrete pavement is a function of curling stress coefficient (C) and Poisson's ratio (μ). Hence, the beam stresses obtained under the fully restrained conditions should be modified in order to obtain stresses in a concrete pavement.

Once the stress field in a concrete pavement is determined, the principles of fracture mechanics allow for the application of the stress field to the geometry of a concrete slab in the analysis of crack potential. The size effect law (SEL) considers for characterization of the stress intensity at the tip of a saw-cut notch in the pavement surface with respect to the slab thickness (*11*). Therefore, if the critical slab stresses at an early concrete age can be quantified, the nominal stress factor as involved in the SEL, illustrated in Figure 10, is based upon

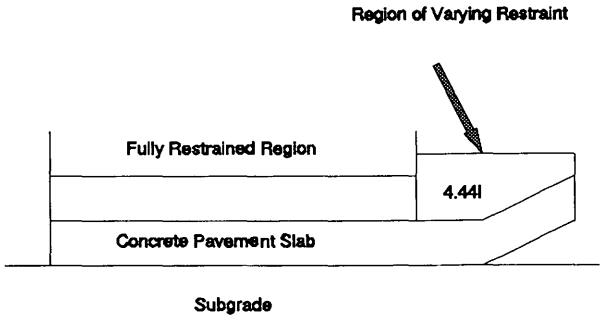

FIGURE 8 Concrete slab restraint conditions.

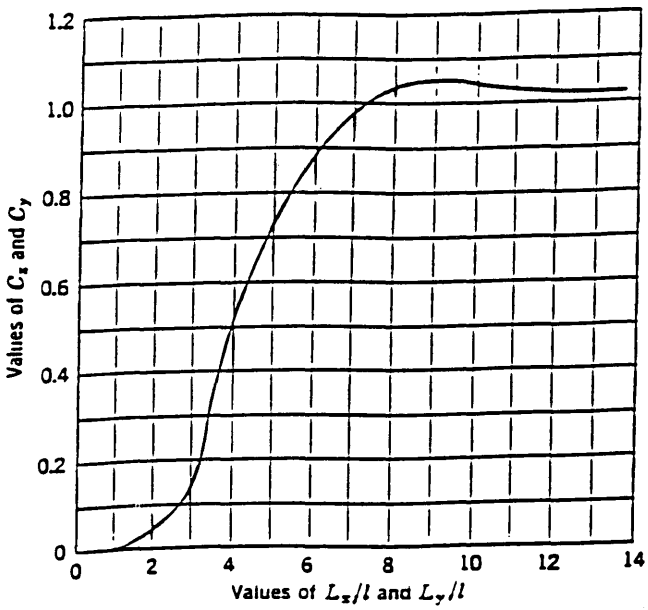

FIGURE 9 Curling stress coefficients (*10*).

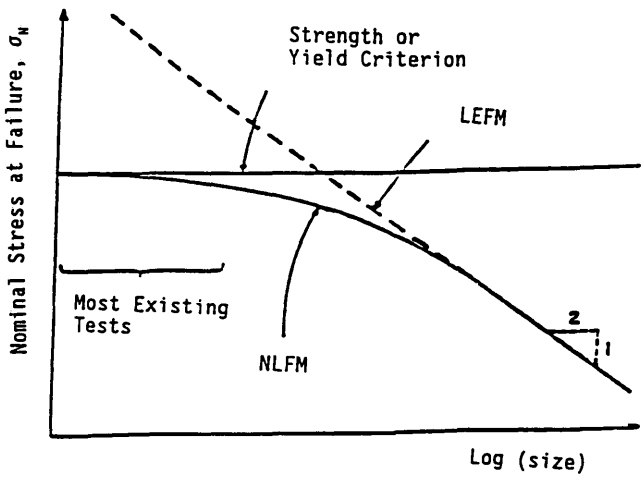

FIGURE 10 Size effects according to stress criterion (*3*).

the use of linear elastic fracture mechanics (LEFM) and therefore is useful in describing the stress and strength (fracture toughness) of concrete at the tip of the saw-cut notch in terms of the stress intensity factor (K_I).

The stress intensity factor for the opening mode fracture can be expressed as:

$$K_I = \sigma_N(\pi a)^{1/2} N(\omega) \tag{4}$$

where a is the crack length and $N(\omega)$ is a function of slab geometry, type of loading, and the ratio of the crack length to a specimen dimension ($\omega = a/d$). The term $N(\omega)$ is the nominal stress. The σ_N or MR as shown in Table 3 represents the stress field as it would occur in the fully restrained portions of the slab. The tensile stress will change vertically because of the change in moisture (consequently, it also results in a change in Gibbs free energy) and will also vary with respect to depth of cut. The development of the function $N(\omega)$ is found from finite element analysis and is elaborated elsewhere (*12*). The results of Equation 4 can be compared (over the first 12 hr after placement) to the fracture toughness of the material to ensure timely placement of saw cuts in a jointed concrete pavement. As far as the practitioner is concerned, given the relationship between saw-cut depth and stress intensity (*12*) and the early age strength of the material, the measurement and monitoring of the in situ relative humidity of the concrete in the pavement (particularly near the surface) as described in this paper offers a practical way to determine when saw-cut operations should begin.

CONCLUSIONS

The knowledge of the failure stress as it relates to the change in relative humidity can be important to determining when to saw cut a freshly constructed rigid pavement, in order to minimize random crack formation. This can be achieved by monitoring and interpreting measured relative humidity data from the pavement slab during construction.

The experimental investigation as reported in this paper reveals that the relative humidity measurements provide a convenient and direct indication of moisture level at the surface of a concrete pavement. The drying at the surface of a slab has a definite effect on the performance of the concrete pavement, especially the skin. The free energy concept is applicable in predicting tensile stresses and shrinkage potential in concrete, by measuring on-site relative humidity conditions near the slab surface. Even though further experimentation is required to investigate both stress and strength variations with moisture in concrete when subjected to different curing regimes, it is evident that a saturated beam specimen exhibits a higher flexural strength than a dry specimen. Thus, the moisture state in concrete should serve as a useful tool in the control of cracking of concrete pavement during construction operations.

ACKNOWLEDGMENTS

This research was carried out in the laboratory of the Texas Transportation Institute, Texas A&M University, College Station, Texas, and was supported by the Texas Department of Transportation.

REFERENCES

1. P. C. Kreijger. The Skin of Concrete—Composition and Properties. *Materials and Construction*, Vol. 17, No. 100, pp. 275–283.
2. L. J. Parrot. Moisture Profiles in Drying Concrete. *Advances in Cement Research*, Vol. 1, No. 3, July 1988, pp. 164–170.
3. Z. P. Bažant. Constitutive Equation for Concrete Creep and Shrinkage Based on Thermodynamics of Multiphase Systems. *Materials and Construction*, Vol. 3, No. 13, 1970, pp. 3–36.
4. Z. P. Bažant and L. J. Najjar. Nonlinear Water Diffusion in Non-Saturated Concrete. *Material and Structures*, Vol. 5, 1972, No. 25, pp. 3–20.
5. G. N. Lewis and M. Randall. *Thermodynamics*. McGraw-Hill Book Company, Inc., New York, N.Y., 1961.
6. T. C. Powers. The Thermodynamics of Volume Change and Creep. *Materials and Construction*, Vol. 1, No. 6, 1968, pp. 487–507.
7. S. Mindess and F. J. Young. *Concrete*. Prentice Hall, Englewood Cliffs, N.J., 1981.
8. A. M. Neville. *Properties of Concrete* (3rd ed.) Pittman Publishing, Aulander, N.C., 1975.
9. H. M. Westergaard. Analysis of Stresses in Concrete Pavements Due to Variations of Temperature. *HRB Proc.*, Vol. 6, 1926, pp. 201–215.
10. R. D. Bradbury. *Reinforced Concrete Pavements*. Wire Reinforcement Institute, Washington, D.C., 1938.
11. Z. P. Bažant. Size Effect in Blunt Fracture: Concrete, Rock, Metal. *Journal of Engineering Mechanics*, Vol. 110, No. 4, 1984, pp. 518–535.
12. D. G. Zollinger, T. Tang, and D. Xin. Sawcut Depth Requirements for Concrete Pavement based upon Fracture Mechanics Analysis. Presented at the 72nd Annual Meeting of the Transportation Research Board, Washington, D.C., 1993.

Publication of this paper sponsored by Committee on Performance of Concrete.