Toward an Adaptive Control Model for Robotic Backhoe Excavation

XIAODONG HUANG AND LEONHARD E. BERNOLD

Research in robotic excavation has been focused mainly on path control to let a machine search and adapt trajectories automatically. Approaches to detect and handle underground obstacles such as rocks or utility lines are also critical for robotizing the operation. A newly established research facility to study robotic backhoe excavation using a real-size hydraulically powered and computer-controlled manipulator is introduced. A hierarchical planning and control model for robotic excavation is presented. The control system for this robotic backhoe is based on multiple sensors for force and position measurements and an approach for the detection and recognition of underground obstacles is discussed. Experimental data are used to analyze the force and acceleration patterns while the bucket hits an obstacle. Finally, a decision model for obstacle handling strategy derivation is introduced.

Almost all production-oriented robots today are used within the manufacturing industry. However, true robots are uncommon in the construction industry because of the unstructured and complex conditions found on a construction site. In addition, construction usually takes place in an uncontrolled environment, exposed to elements such as weather, dust, and noise. The attributes of the materials to be handled range from large, heavy, bulky, and nonhomogeneous to light, fragile, and homogeneous. In addition, although one of the traditional materials handled in construction is soil, the mechanics of excavating soil and rocks are poorly understood.

Despite the many difficulties, opportunities for applying high technology in construction are abundant. For certain applications and situations, such as construction in hazardous areas (i.e., nuclear waste disposal, space construction), robotic technology is unavoidable (*1*). However, the lack of automatic planning and control models needed for robotic operations in construction requires empirical as well as theoretical studies.

One of the high volume and repetitive operations at the construction site is the excavation of soil. Studies on the applications of robotic excavation have been undertaken by several researchers. The kinematic and dynamic control model for a robotic excavator was studied and established by Vaha (*2*). An approach for force-cognitive robotic excavation was developed by Bullock and Oppenheim (*3*). Tochizawa et al. reported about an automated excavator for excavating a trench for drainage using laser guidance (*4*) and showed that efficiency was improved 1.6 times while labor hours decreased and digging accuracy increased.

X. Huang, Department of Mechanical and Aeronautical Engineering, North Carolina State University, Raleigh, N.C. 27695. L. E. Bernold, Department of Civil Engineering, North Carolina State University, Raleigh, N.C. 27695.

PLANNING AND CONTROL HIERARCHY FOR ROBOTIC EXCAVATION

General Control Concepts

Several basic robotic control models have been developed in the past. Among them are position control (*5*), force control (*6*), hybrid control, and impedance control. Because of their relevance to robotic excavation, the last two models will be discussed briefly.

In a hybrid control model, a position and force control system tries to satisfy the task requirements by using both position and force feedback information for trajectory planning. A typical hybrid control problem is to follow a trajectory and to exert a force at contact with the environment. In free space where no external force is measurable, the position controller ensures that the end effector follows the prescribed trajectory, whereas the force controller is inactive. As soon as contact occurs between the end effector and the environment, the force sensors are able to detect contact forces which depend on the stiffness of the entire system (robot arm, end-effector, and environment) (*7*). Now, the control mode switches to force control. This type of dual control has been labeled "hybrid control" as a matter of consensus in the robotics literature.

Impedance control differs from traditional force/position control policies in that instead of controlling one state variable—position, velocity, or force—it specifies the relationship among them for trajectory planning. This type of control has many desirable attributes. Chief among them is the ability to come in contact with a hard surface without losing stability as well as to control directly the mechanical interactions with the environment (*8*). For an impedance control model, the same strategic interface can be used for both free-motion slews and manipulation requiring contact. These capabilities are critical during bucket obstacle interference because the detection and handling of any obstacle has to be automatic.

However, the above listed control models are based on a good understanding of the dynamics of the robot system and its environment. In a number of instances, however, the system to be controlled is too complex, and the basic physical relationships are not fully understood. Thus, the control model needs to be augmented with an identification technique aimed at obtaining a progressively better understanding of the dynamics of both the manipulator and its work environment (*9*). Adaptive control is generally used as a framework which is characterized by its capabilities to gather information about an unknown process and to make automatic command changes using the employed control law. Adaptive control systems

adjust their behaviors to the changing properties of the controlled processes and the sensory feedback signals (*10*).

In designing a control model for the robotic backhoe excavator, several basic characteristics of the backhoe excavation have to be considered. The end effector (e.g., a bucket) travels both in free space and in soil. The control parameters for these two distinct environments differ when only position or force control models are applied. Even within the soil environment, the characteristics of the soil may change abruptly within a short distance, not mentioning the existence of underground obstacles. Because of its capability for tasks requiring contact with external environment, the impedance control model is ideal for robotic backhoe excavation. In addition, the uniqueness of the adaptive control concept to self-adjust and compensate for the unknown system parameters makes it a well-suited overall control framework. Thus, an adaptive control framework that incorporates the impedance control model has been selected to serve as the control system for robotic backhoe excavation.

Hierarchical Model for Planning and Control

A hierarchy for planning and control has been developed shown in Figure 1. This hierarchy is composed of three major modules: master planning, path planning, and adaptive control. The master planning module is responsible for developing general plans for an entire job, such as digging a trench. Each plan is executed by initiating lower level commands.

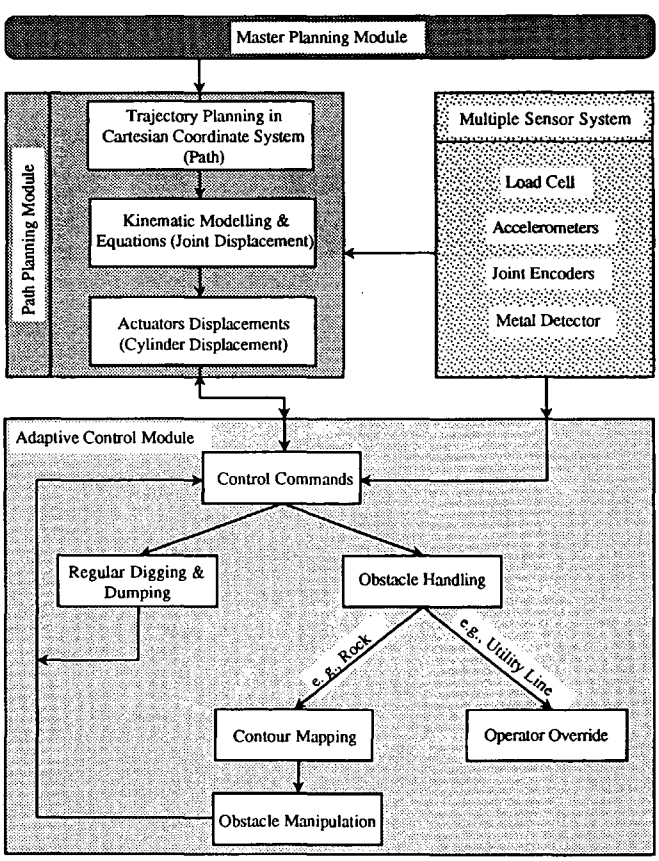

FIGURE 1 Planning and control hierarchy for robotic excavation.

The path planning module produces trajectories for the stepwise execution of the master plan. One trajectory is composed of a sequence of points defined in a fixed x-y-z Cartesian coordinate system. By defining the starting and ending position, a trajectory is developed by the computer based on the specific objective of a path (e.g., filling the bucket with soil). This trajectory is translated into manipulator joint displacements (e.g., rotational angles) using inverse kinematics. As in Figure 1, the final step in the path planning module is developing the instructions to the actuators for motion executions (e.g., linear cylinder movements) necessary to accomplish the joint displacements. Each component of the path planning module decomposes the directives until primitive instructions are obtained.

The adaptive control module shown in Figure 1 is decomposed into two main modes: regular digging and the obstacle handling. If no obstacle is encountered, the control system operates in a regular digging mode. During the excavation, the multiple sensors provide data about force, accelerations, and positions to the controller. By comparing them with the desired values (e.g., planned positions), commands are generated in real time to adapt the trajectory. If the manipulator is equipped with a metal detector search coil and a force sensor, load cell, metals (e.g., pipes) and other obstacles (e.g., rocks) could be detected. When metal is detected, it is presumed that the bucket is coming near one part of a utility line. A signal will be generated to slow down the excavation and any signal variations from the detector will be monitored. On the other hand, if no metal is detected while the force shows an abrupt and drastic change, it is presumed that the bucket has hit a rock or other nonmetallic obstacle. The control system then switches automatically to the obstacle handling mode and the path is to be adjusted around this obstacle to continue digging. For example, when hitting a rock, the impedance controller is able to modify the trajectory by moving the bucket backward and up by 0.02 m before continuing its path. If the bucket hits the same obstacle again, another adjustment to the trajectory has to be made. Thus, by recording the positions of interference, the control system will be able to derive the contour of the rock in this particular path. After a series of paths, a partial surface contour map of the rock can be obtained, which should enable the system to select an appropriate strategy to handle this removable obstacle.

EXPERIMENTAL FACILITY FOR ROBOTIC EXCAVATION

A Multipurpose Robotic Manipulator Platform (MRMP) has been built within the Construction Automation and Robotics Laboratory of North Carolina State University (see Figure 2). It is driven by one hydraulic motor for base rotation and three hydraulic actuators (cylinders), which provide a total of 4 degrees of freedom (DOF). Three kinds of sensors are used in the data collection system. One force sensor, load cell, is mounted at the rod of the third hydraulic actuator. Three accelerometers are mounted on the boom, the arm, and the end plate (connection between the bucket and arm), respec-

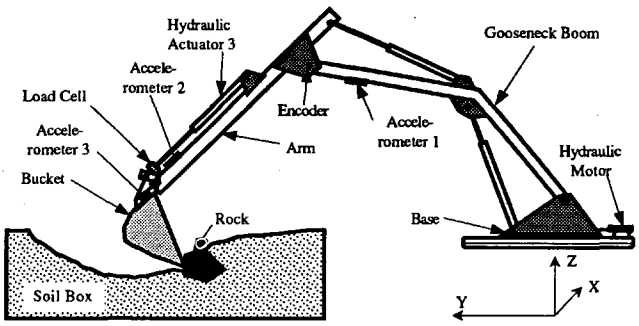

FIGURE 2 Experimental platform: robotic backhoe excavator.

tively, to detect accelerations in both the digging plane and the area perpendicular to the digging plane. One joint encoder is installed at the third joint to measure the actual joint angles. A metal detector search coil will be adopted to mount on the bottom of the arm to detect some utility lines and electric wires. By using an analog/digital board with a sampling rate over 4 KHz, the computer reads in real time the changes from the sensors. Control commands from the 386 computer are sent to the actuators through a digital/analog board. The commands act on four electrohydraulic proportional valves to open and close the valves proportionally and to change the flow directions of the oil.

IN-PROCESS OBSTACLE RECOGNITION AND HANDLING STRATEGY

Obstacles in excavation can be divided into two basic categories: removable rigid objects such as rock or lumber pieces and nonremovable objects such as utility lines. In 1989 the United Kingdom reported about 70,000 instances of damage to buried services during excavation (*11*). During excavation it becomes more critical that buried obstacles such as utility lines can be detected and distinguished from removable obstacles such as rocks to avoid accidents.

Sensor-Based Obstacle Detection and Recognition

One approach to detecting such obstacles is to include an electromagnetic detector capable of detecting metal pipes and electrical wires. By attaching such a sensor on the arm close to the actual location where the bucket will interact with a metallic obstacle, high accuracy and dependability can be achieved. Because the detector scans the area ahead of the bucket tip during actual excavation, it will send out a warning signal and stop the excavation before the bucket cuts the line. However, current technology does not effectively detect plastic pipes and other nonmetallic utility lines.

The action of digging in a uniform soil with a bucket can be compared to cutting cheese with a knife. The force caused during bucket-soil interactions increases gradually (Figure 3, before 75 samples). If a large obstacle buried in the soil is contacted, the impedance of the environment changes abruptly and significantly. The motion discontinues when the measured resistance force is larger than normally expected. Thus, the force required for digging is an excellent indication

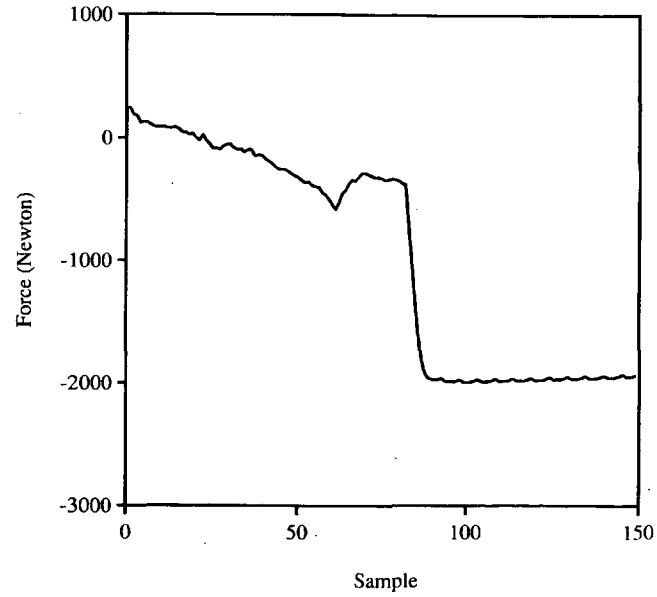

FIGURE 3 Load cell force pattern during bucket-rock impact.

of the soil conditions and the presence of a large obstacle. Figure 3 shows the output of the load cell curing a bucket-rock impact. In this figure a negative force represents compression and a positive value represents the tension mode in hydraulic actuator 3.

Figure 3 shows that after the compression force undergoes a normal increase during digging, an abrupt and drastic increase can be observed. Actually, at exactly this point, the bucket hit a buried rock in the soil box. The slope of the force curve at this point is almost vertical. As the compression force reaches -2002.5 N (-450 lb), the pressure-reducing valves in the hydraulic power system are activated. As a result, the excavation motion stops, and the impact position is recorded in the computer data base. The stable force observed after the collision indicates a horizontal line.

Before the robot can handle a removable obstacle, such as a rock, an estimate of the position, shape, and dimension of the obstacle has to be derived. This requires much more detailed information from the sensors. While two accelerometers are being used to acquire the inclinations of the boom and the arm, the third accelerometer is mounted at the end plate to detect the acceleration along the x-axis and torsional deflection in the y-axis (in Figure 2). Several experiments have been undertaken to measure and analyze the output of this accelerometer during the bucket-obstacle impact. It was hoped that the output could be used to determine at which cutting edge the bucket contacts the obstacle. From this information the control system could derive the position of the obstacle relative to the bucket. As a result, a more accurate point of interference can be identified for mapping the surface contour of the obstacle. In addition, the information about the relative position is very helpful for deciding the next digging path. Figures 4 and 5 show data sets from the experiments designed to test such a concept.

Figures 4 and 5 display two acceleration patterns from Accelerometer 3 during bucket-rock interactions. Both out-

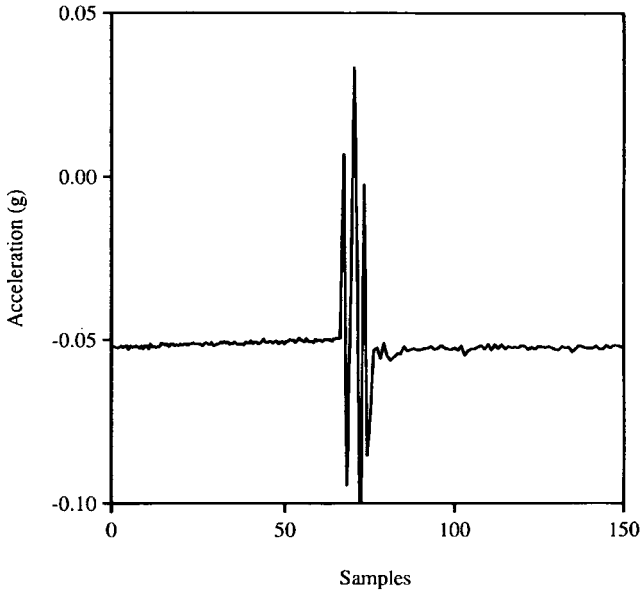

FIGURE 4 Acceleration patterns during bucket-rock impact (Accelerometer 3): bucket-rock impact at left edge.

puts start with stable accelerations (horizontal lines) between samples 0 and 75. During this period, the bucket is in a regular digging mode (also refer to Figure 3). Around the 75th sample, a positive impulse followed by high-frequency oscillations in Figure 4 and a negative impulse followed by high-frequency oscillations in Figure 5 can be observed. At these moments, the bucket collides with the buried rock in the soil box. One can notice that after the accelerations are stabilized again, the plateaus of acceleration before and after the actual impact differ. The difference is linked to the torsional deflection of the bucket during the impact. For example, when the rock is rammed by the left corner of the bucket cutting edge, a positive acceleration occurs first, followed by oscillations. The stable acceleration level before and after the impact changes from approximately -0.05 to $-0.06\ g$ ($\Delta a \approx -0.01\ g$, $1\ g = 9.8$ m/sec^2, Figure 4).

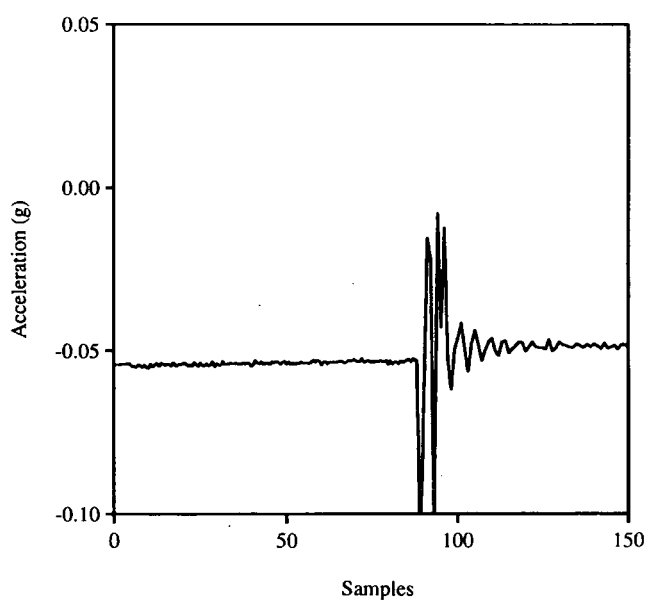

FIGURE 5 Acceleration patterns during bucket-rock impact (Accelerometer 3): bucket-rock impact at right edge.

Where the rock is hit with the right corner of the bucket cutting edge, the stable acceleration level changes from approximately -0.06 to $-0.05\ g$ ($\Delta a \approx 0.01\ g$, Figure 5). The different changes in the stable acceleration outputs indicate the bucket's different directions of rotational deflection. This fact corresponds with the observed bucket rotation due to the eccentric force caused during the bucket-rock collision. And the test results indicate that the accelerations could indeed provide valuable information for adaptive, controlled obstacle handling. Both surface contour mapping and path replanning benefit from the availability of data indicating more accurately the point of interference.

Strategy Derivation for Obstacle Manipulation

A removable obstacle can be handled in a variety of ways, depending on the objective of the excavation and the characteristics of the obstacle itself. Strategies have to be developed for this purpose. Finding the "best" strategy is a decision-making process that may take advantage of a decision tree using some input conditions. These conditions include the results of obstacle recognition and contour mapping, which provide data about the dimensions of the obstacle; the excavation requirements; and mechanical system configurations. Figure 6 shows a partial decision-making tree for handling the removable obstacles.

The decision tree in Figure 6 relates conditions and goals with manipulation strategies by using artificial reasoning procedures. The goal is to find a strategy for removing a detected obstacle. Given the required conditions, the reasoning mechanism searches through this tree and derives a strategy (conclusion) to be used by the control system. If several strategies can be activated at the same time, then the one with the highest priority will be selected first. The strategy with lower priority will be chosen only if the control system fails with the removal using the higher priority scheme.

The hierarchical framework used to develop the control system allows the effective integration between different control components briefly discussed earlier in this paper. As a result, the model presented in Figure 6 is represented by only one box within the adaptive control module in Figure 2. This modularization contributes to the flexibilities of the proposed control concept.

CONCLUSION

This paper presents concepts and experimental results on the issue of adaptive control for robotic excavation. Multiple sensors, such as a load cell, and three accelerometers have been installed on a computer-controlled backhoe excavator for tests. These sensors are used not only for monitoring forces and sensing positions but also for detecting, recognizing, and handling obstacles. A hierarchical planning and control model is developed. The control system is designed to be able to detect obstacles during digging. Obstacle handling strategy can be

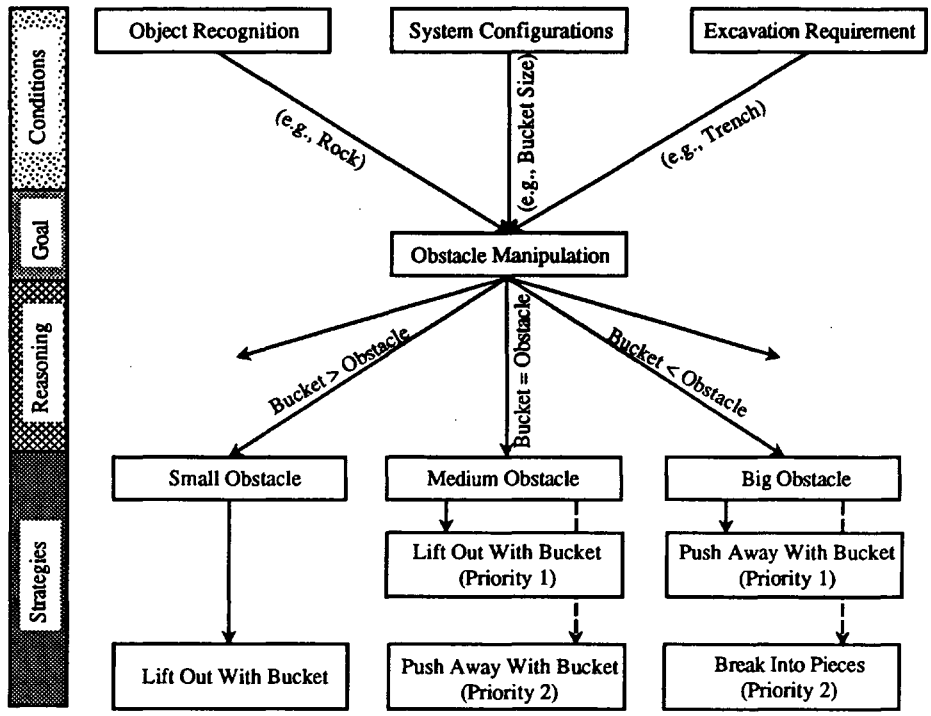

FIGURE 6 Partial decision tree for obstacle manipulation.

invoked automatically using a decision tree structure. The initial research results support the effectiveness of using multiple sensors together with the adaptive control concept for robotic excavation in unstructured environments.

ACKNOWLEDGMENTS

The College of Engineering at the North Carolina State University and the Space Studies Institute at Princeton, New Jersey, supported the research for this paper.

REFERENCES

1. R. Colbaugh and M. Jamshidi. Robot Manipulator Control for Hazardous Waste-Handling Applications. *Journal of Robotic Systems*, Vol. 9, No. 2, Sept. 1992, pp. 215–250.
2. P. Vaha. *Modelling and Control of Cognitive Excavation*. Technical Report. School of Civil Engineering, Purdue University, West Lafayette, Ind., Oct. 1990.
3. D. M. Bullock and I. J. Oppenheim. Object-Oriented Programming in Robotics Research for Excavation. *Journal of Computing in Civil Engineering*, Vol. 6, No. 3, July 1992, pp. 370–385.
4. M. Tochizawa, S. Takeda, et al. Automatic Excavator. *Proc., 8th International Symposium on Automation and Robotics in Construction*, Vol. 1, Stuttgart Killesberg, Germany, June 1991, pp. 277–284.
5. H. Asada and J.-J. E. Slotine. *Robot Analysis and Control*. John Wiley and Sons, Inc., New York, 1986, pp. 136–139.
6. Z. W. Luo and M. Ito. Control Design of Robot for Compliant Manipulation on Dynamic Environments. *Proc., of the 1991 IEEE International Conference on Robotics and Automation*, Sacramento, Calif., Vol. 1, April 1991, pp. 42–47.
7. S. Chiaverini and L. Sciavicco. Force/Position Control of Manipulator in Task Space With Dominance in Force. *Proc., Robot Control 1988 (SYROCO'88) Selected Papers from the 2nd IFAC Symposium*, Karlsruhe, Germany, Oct. 1988, pp. 137–143.
8. S. A. Schneider and R. H. Cannon, Jr. Object Impedance Control for Cooperative Manipulation: Theory and Experimental Results. *Proc., IEEE Transactions on Robotics and Automation*, Vol. 8, No. 3, June 1992, pp. 383–394.
9. S. Sastry and M. Bodson. *Adaptive Control—Stability, Convergence, and Robustness*. Prentice-Hall, Inc., Englewood Cliffs, N.J., 1989.
10. R. Isermann, K.-H. Lachmann, and D. Matko. *Adaptive Control Systems*. Prentice-Hall International (U.K.) Ltd, Great Britain, 1992.
11. D. A. Bradley, D. W. Seward, and R. H. Bracewell. Control and Operational Strategies for Automatic Excavation. *Proc., 6th International Symposium on Automation and Robotics in Construction*, Vol. 1, San Francisco, Calif. June 1989, pp. 237–244.

Publication of this paper sponsored by Committee on Applications of Emerging Technology.